AUTHENTICATED
U.S. GOVERNMENT
INFORMATION
GPO

FEDERAL REGISTER

Vol. 76 Wednesday,
No. 169 August 31, 2011

Part II

Environmental Protection Agency

40 CFR Parts 50, 53 and 58
Review of National Ambient Air Quality Standards for Carbon Monoxide; Final Rule

ENVIRONMENTAL PROTECTION AGENCY

40 CFR Parts 50, 53 and 58

[EPA–HQ–OAR–2008–0015; FRL–9455–2]

RIN 2060–AI43

Review of National Ambient Air Quality Standards for Carbon Monoxide

AGENCY: Environmental Protection Agency (EPA).

ACTION: Final rule.

SUMMARY: This rule is being issued at this time as required by a court order governing the schedule for completion of this review of the air quality criteria and the national ambient air quality standards (NAAQS) for carbon monoxide (CO). Based on its review, the EPA concludes the current primary standards are requisite to protect public health with an adequate margin of safety, and is retaining those standards. After review of the air quality criteria, EPA further concludes that no secondary standard should be set for CO at this time. EPA is also making changes to the ambient air monitoring requirements for CO, including those related to network design, and is updating, without substantive change, aspects of the Federal reference method.

DATES: This final rule is effective on October 31, 2011.

ADDRESSES: EPA has established a docket for this action under Docket ID No. EPA–HQ–OAR–2008–0015. Incorporated into this docket is a separate docket established for the 2010 *Integrated Science Assessment for Carbon Monoxide* (Docket ID No. EPA–HQ–ORD–2007–0925. All documents in these dockets are listed on the *http://www.regulations.gov* Web site. Although listed in the docket index, some information is not publicly available, *e.g.*, confidential business information (CBI) or other information whose disclosure is restricted by statute. Certain other material, such as copyrighted material, is not placed on the Internet and will be publicly available for viewing at the Public Reading Room. Abstracts of scientific studies cited in the review are also available on the Internet at EPA's HERO Web site: *http://hero.epa.gov/*, by clicking on the box on the right side of the page labeled ''Search HERO.'' Publicly available docket materials are available electronically through *www.regulations.gov* or may be viewed at the Public Reading Room at the Air and Radiation Docket and Information Center, EPA/DC, EPA West, Room 3334, 1301 Constitution Ave., NW., Washington, DC. The Public Reading Room is open from 8:30 a.m. to 4:30 p.m., Monday through Friday, excluding legal holidays. The telephone number for the Public Reading Room is (202) 566–1744 and the telephone number for the Air and Radiation Docket and Information Center is (202) 566–1742.

FOR FURTHER INFORMATION CONTACT: Dr. Deirdre Murphy, Health and Environmental Impacts Division, Office of Air Quality Planning and Standards, Mail code C504–06, U.S. Environmental Protection Agency, Research Triangle Park, NC 27711; telephone number: 919–541–0729; fax number: 919–541–0237; e-mail address: *murphy.deirdre@epa.gov.* For further information specifically with regard to section IV of this notice, contact Mr. Nealson Watkins, Air Quality Analysis Division, Office of Air Quality Planning and Standards, Mail code C304–06, U.S. Environmental Protection Agency, Research Triangle Park, NC 27711; telephone number: 919–541–5522; fax number: 919–541–1903; e-mail address: *watkins.nealson@epa.gov.*

SUPPLEMENTARY INFORMATION:

Table of Contents

The following topics are discussed in this preamble:

I. Background
A. Legislative Requirements
B. Related Carbon Monoxide Control Programs
C. Review of the Air Quality Criteria and Standards for Carbon Monoxide
D. Summary of Proposed Decisions on Standards for Carbon Monoxide
E. Organization and Approach to Final Decisions on Standards for Carbon Monoxide
II. Rationale for Decisions on the Primary Standards
A. Introduction
1. Overview of Air Quality Information
2. Overview of Health Effects Information
a. Carboxyhemoglobin as Biomarker of Exposure and Toxicity
b. Nature of Effects and At-Risk Populations
c. Cardiovascular Effects
3. Overview of Human Exposure and Dose Assessment
B. Adequacy of the Current Primary Standards
1. Rationale for Proposed Decision
2. Comments on Adequacy
3. Conclusions Concerning Adequacy of the Primary Standards
III. Consideration of a Secondary Standard
A. Introduction
B. Rationale for Proposed Decision
C. Comments on Consideration of Secondary Standard
D. Conclusions Concerning a Secondary Standard
IV. Amendments to Ambient Monitoring Requirements
A. Monitoring Methods
1. Proposed Changes to Parts 50 and 53
2. Public Comments
3. Decisions on Methods
B. Network Design
1. Proposed Changes
2. Public Comments
a. Near-Road Monitoring and Collocation With Near-Road Nitrogen Dioxide Monitors
b. Population Thresholds for Requiring Near-Road Carbon Monoxide Monitors
c. Implementation Schedule
d. Siting Criteria
e. Area-Wide Monitoring
f. Regional Administrator Authority
3. Conclusions on the Network Design
V. Statutory and Executive Order Reviews
A. Executive Order 12866: Regulatory Planning and Review and Executive Order 13563: Improving Regulation and Regulatory Review
B. Paperwork Reduction Act
C. Regulatory Flexibility Act
D. Unfunded Mandates Reform Act
E. Executive Order 13132: Federalism
F. Executive Order 13175: Consultation and Coordination With Indian Tribal Governments
G. Executive Order 13045: Protection of Children From Environmental Health and Safety Risks
H. Executive Order 13211: Actions That Significantly Affect Energy Supply, Distribution or Use
I. National Technology Transfer and Advancement Act
J. Executive Order 12898: Federal Actions To Address Environmental Justice in Minority Populations and Low-Income Populations
K. Congressional Review Act References

I. Background

A. Legislative Requirements

Two sections of the Clean Air Act (CAA) govern the establishment and revision of the NAAQS. Section 108 (42 U.S.C. 7408) directs the Administrator to identify and list certain air pollutants and then to issue air quality criteria for those pollutants. The Administrator is to list those air pollutants that in her ''judgment, cause or contribute to air pollution which may reasonably be anticipated to endanger public health or welfare;'' ''the presence of which in the ambient air results from numerous or diverse mobile or stationary sources;'' and ''for which * * * [the Administrator] plans to issue air quality criteria * * * '' Air quality criteria are intended to ''accurately reflect the latest scientific knowledge useful in indicating the kind and extent of all identifiable effects on public health or welfare which may be expected from the presence of [a] pollutant in the ambient air * * *'' 42 U.S.C. 7408(b). Section 109 (42 U.S.C. 7409) directs the Administrator to propose and promulgate ''primary'' and ''secondary'' NAAQS for pollutants for which air

quality criteria are issued. Section 109(b)(1) defines a primary standard as one ''the attainment and maintenance of which in the judgment of the Administrator, based on such criteria and allowing an adequate margin of safety, are requisite to protect the public health.'' [1] A secondary standard, as defined in section 109(b)(2), must ''specify a level of air quality the attainment and maintenance of which, in the judgment of the Administrator, based on such criteria, is requisite to protect the public welfare from any known or anticipated adverse effects associated with the presence of [the] pollutant in the ambient air.'' [2]

The requirement that primary standards provide an adequate margin of safety was intended to address uncertainties associated with inconclusive scientific and technical information available at the time of standard setting. It was also intended to provide a reasonable degree of protection against hazards that research has not yet identified. See *Lead Industries Association* v. *EPA*, 647 F.2d 1130, 1154 (DC Cir. 1980), *cert. denied,* 449 U.S. 1042 (1980); *American Petroleum Institute* v. *Costle*, 665 F.2d 1176, 1186 (DC Cir. 1981), *cert. denied,* 455 U.S. 1034 (1982); *American Farm Bureau Federation* v. *EPA*, 559 F.3d 512, 533 (DC Cir. 2009); *Association of Battery Recyclers* v. *EPA*, 604 F.3d 613, 617–18 (DC Cir. 2010). Both kinds of uncertainties are components of the risk associated with pollution at levels below those at which human health effects can be said to occur with reasonable scientific certainty. Thus, in selecting primary standards that provide an adequate margin of safety, the Administrator is seeking not only to prevent pollution levels that have been demonstrated to be harmful but also to prevent lower pollutant levels that may pose an unacceptable risk of harm, even if the risk is not precisely identified as to nature or degree. The CAA does not require the Administrator to establish a primary NAAQS at a zero-risk level or at background concentration levels, see *Lead Industries* v. *EPA*, 647 F.2d at 1156 n.51, but rather at a level that reduces risk sufficiently so as to protect public health with an adequate margin of safety.

In addressing the requirement for an adequate margin of safety, the EPA considers such factors as the nature and severity of the health effects involved, the size of sensitive population(s) at risk, and the kind and degree of the uncertainties that must be addressed. The selection of any particular approach to providing an adequate margin of safety is a policy choice left specifically to the Administrator's judgment. See *Lead Industries Association* v. *EPA,* 647 F.2d at 1161–62; *Whitman* v. *American Trucking Associations,* 531 U.S. 457, 495 (2001).

In setting primary and secondary standards that are ''requisite'' to protect public health and welfare, respectively, as provided in section 109(b), EPA's task is to establish standards that are neither more nor less stringent than necessary for these purposes. In so doing, EPA may not consider the costs of implementing the standards. See generally, *Whitman* v. *American Trucking Associations,* 531 U.S. 457, 465–472, 475–76 (2001). Likewise, ''[a]ttainability and technological feasibility are not relevant considerations in the promulgation of national ambient air quality standards.'' *American Petroleum Institute* v. *Costle*, 665 F. 2d at 1185.

Section 109(d)(1) requires that ''not later than December 31, 1980, and at 5-year intervals thereafter, the Administrator shall complete a thorough review of the criteria published under section 108 and the national ambient air quality standards * * * and shall make such revisions in such criteria and standards and promulgate such new standards as may be appropriate. * * *'' Section 109(d)(2) requires that an independent scientific review committee ''shall complete a review of the criteria * * * and the national primary and secondary ambient air quality standards * * * and shall recommend to the Administrator any new * * * standards and revisions of existing criteria and standards as may be appropriate. * * *'' Since the early 1980's, this independent review function has been performed by the Clean Air Scientific Advisory Committee (CASAC).[3]

B. Related Carbon Monoxide Control Programs

States are primarily responsible for ensuring attainment and maintenance of ambient air quality standards once EPA has established them. Under section 110 of the Act, and related provisions, states are to submit, for EPA approval, state implementation plans (SIPs) that provide for the attainment and maintenance of such standards through control programs directed to sources of the pollutants involved. The states, in conjunction with EPA, also administer the prevention of significant deterioration program. See CAA sections 160–169. In addition, Federal programs provide for nationwide reductions in emissions of these and other air pollutants through the Federal motor vehicle and motor vehicle fuel control program under title II of the Act (CAA sections 202–250), which involves controls for emissions from moving sources and controls for the fuels used by these sources and new source performance standards for stationary sources under section 111.

C. Review of the Air Quality Criteria and Standards for Carbon Monoxide

EPA initially established NAAQS for CO on April 30, 1971. The primary standards were established to protect against the occurrence of carboxyhemoglobin levels in human blood associated with health effects of concern. The standards were set at 9 parts per million (ppm), as an 8-hour average, and 35 ppm, as a 1-hour average, neither to be exceeded more than once per year (36 FR 8186). In the 1971 decision, the Administrator judged that attainment of these standards would provide the requisite protection of public health with an adequate margin of safety and would also provide requisite protection against known and anticipated adverse effects on public welfare, and accordingly set the secondary (welfare-based) standards identical to the primary (health-based) standards.

In 1985, EPA concluded its first periodic review of the criteria and standards for CO (50 FR 37484). In that review, EPA updated the scientific criteria upon which the initial CO standards were based through the publication of the 1979 *Air Quality Criteria Document for Carbon Monoxide* (AQCD; USEPA, 1979a) and prepared a Staff Paper (USEPA, 1979b), which, along with the 1979 AQCD, served as the basis for the development of the notice of proposed rulemaking which was published on August 18, 1980 (45 FR 55066). Delays due to uncertainties

[1] The legislative history of section 109 indicates that a primary standard is to be set at ''the maximum permissible ambient air level * * * which will protect the health of any [sensitive] group of the population,'' and that for this purpose ''reference should be made to a representative sample of persons comprising the sensitive group rather than to a single person in such a group'' S. Rep. No. 91–1196, 91st Cong., 2d Sess. 10 (1970).

[2] Welfare effects as defined in section 302(h) (42 U.S.C. 7602(h)) include, but are not limited to, ''effects on soils, water, crops, vegetation, man-made materials, animals, wildlife, weather, visibility and climate, damage to and deterioration of property, and hazards to transportation, as well as effects on economic values and on personal comfort and well-being.''

[3] Lists of CASAC members and of members of the CASAC CO Review Panel are available at: *http://yosemite.epa.gov/sab/sabproduct.nsf/WebCASAC/CommitteesandMembership?OpenDocument.*

regarding the scientific basis for the final decision resulted in EPA's announcing a second public comment period (47 FR 26407). Following substantial reexamination of the scientific data, EPA prepared an Addendum to the 1979 AQCD (USEPA, 1984a) and an updated Staff Paper (USEPA, 1984b). Following review by CASAC (Lippmann, 1984), EPA announced its decision not to revise the existing primary standards and to revoke the secondary standard for CO on September 13, 1985, due to a lack of evidence of effects on public welfare at ambient concentrations (50 FR 37484).

On August 1, 1994, EPA concluded its second periodic review of the criteria and standards for CO by deciding that revisions to the CO NAAQS were not warranted at that time (59 FR 38906). This decision reflected EPA's review of relevant scientific information assembled since the last review, as contained in the 1991 AQCD (USEPA, 1991) and the 1992 Staff Paper (USEPA, 1992). Thus, the primary standards were retained at 9 ppm with an 8-hour averaging time, and 35 ppm with a 1-hour averaging time, neither to be exceeded more than once per year (59 FR 38906).

EPA initiated the next periodic review in 1997 and released the final 2000 AQCD (USEPA, 2000) in August 2000. After release of the AQCD, Congress requested that the National Research Council (NRC) review the impact of meteorology and topography on ambient CO concentrations in high altitude and extreme cold regions of the U.S. The NRC convened the Committee on Carbon Monoxide Episodes in Meteorological and Topographical Problem Areas, which focused on Fairbanks, Alaska, as a case-study.

A final report, ''Managing Carbon Monoxide Pollution in Meteorological and Topographical Problem Areas,'' was published in 2003 (NRC, 2003) and offered a wide range of recommendations regarding management of CO air pollution, cold start emissions standards, oxygenated fuels, and CO monitoring. Following completion of the NRC report, EPA did not conduct rulemaking to complete the review.

On September 13, 2007, EPA issued a call for information from the public (72 FR 52369) requesting the submission of recent scientific information on specified topics. On January 28–29, 2008, a workshop was held to discuss policy-relevant scientific and technical information to inform EPA's planning for the CO NAAQS review (73 FR 2490). Following the workshop, a draft Integrated Review Plan (IRP) (USEPA, 2008a) was made available in March 2008 for public comment and was discussed by the CASAC via a publicly accessible teleconference consultation on April 8, 2008 (73 FR 12998; Henderson, 2008). EPA made the final IRP available in August 2008 (USEPA, 2008b).

In preparing the *Integrated Science Assessment for Carbon Monoxide* (ISA or Integrated Science Assessment), EPA held an authors' teleconference in November 2008 with invited scientific experts to discuss preliminary draft materials prepared as part of the ongoing development of the CO ISA and its supplementary annexes. The first draft ISA (USEPA, 2009a) was made available for public review on March 12, 2009 (74 FR 10734), and reviewed by CASAC at a meeting held on May 12–13, 2009 (74 FR 15265). A second draft ISA (USEPA, 2009b) was released for CASAC and public review on September 23, 2009 (74 FR 48536), and it was reviewed by CASAC at a meeting held on November 16–17, 2009 (74 FR 54042). The final ISA was released in January 2010 (USEPA, 2010a).

In May 2009, OAQPS released a draft planning document, the draft Scope and Methods Plan (USEPA, 2009c), for consultation with CASAC and public review at the CASAC meeting held on May 12–13, 2009. Taking into consideration comments on the draft Scope and Methods Plan from CASAC (Brain, 2009) and the public, OAQPS staff developed and released for CASAC review and public comment a first draft Risk and Exposure Assessment (REA) (USEPA, 2009d), which was reviewed at the CASAC meeting held on November 16–17, 2009. Subsequent to that meeting and taking into consideration comments from CASAC (Brain and Samet, 2010a) and public comments on the first draft REA, a second draft REA (USEPA, 2010d) was released for CASAC review and public comment in February 2010, and reviewed at a CASAC meeting held on March 22–23, 2010. Drawing from information in the final CO ISA and the second draft REA, EPA released a draft Policy Assessment (PA) (USEPA, 2010e) in early March 2010 for CASAC review and public comment at the same meeting. Taking into consideration comments on the second draft REA and the draft PA from CASAC (Brain and Samet, 2010b, 2010c) and the public, staff completed the quantitative assessments which are presented in the final REA (USEPA, 2010b). Staff additionally took into consideration those comments and the final REA analyses in completing the final Policy Assessment (USEPA, 2010c) which was released in October 2010.

The proposed decision (henceforth ''proposal'') on the review of the CO NAAQS was signed on January 28, 2011, and published in the **Federal Register** on February 11, 2011. The EPA held a public hearing to provide direct opportunity for oral testimony by the public on the proposal. The hearing was held on February 28, 2011, in Arlington, Virginia. At this public hearing, EPA heard testimony from five individuals representing themselves or specific interested organizations. Transcripts from this hearing and written testimony provided at the hearing are in the docket for this review. Additionally, written comments were received from various commenters during the public comment period on the proposal. Significant issues raised in the public comments are discussed in the preamble of this final action. A summary of all other significant comments, along with EPA's responses (henceforth ''Response to Comments'') can be found in the docket for this review.

The schedule for completion of this review is governed by a court order resolving a lawsuit filed in March 2003 by a group of plaintiffs who alleged that EPA had failed to perform its mandatory duty, under section 109(d)(1), to complete a review of the CO NAAQS within the period provided by statute. The court order that governs this review, entered by the court on November 14, 2008, and amended on August 30, 2010, provides that EPA will sign for publication a notice of final rulemaking concerning its review of the CO NAAQS no later than August 12, 2011.

Some commenters have referred to and discussed individual scientific studies on the health effects of CO that were not included in the ISA (USEPA, 2010a) (''new' studies''). In considering and responding to comments for which such ''new'' studies were cited in support, EPA has provisionally considered the cited studies in the context of the findings of the ISA.

As in prior NAAQS reviews, EPA is basing its decision in this review on studies and related information included in the ISA, REA and Policy Assessment, which have undergone CASAC and public review. The studies assessed in the ISA and Policy Assessment, and the integration of the scientific evidence presented in them, have undergone extensive critical review by EPA, CASAC, and the public. The rigor of that review makes these studies, and their integrative assessment, the most reliable source of scientific information on which to base decisions on the NAAQS, decisions that all parties recognize as of great import.

NAAQS decisions can have profound impacts on public health and welfare, and NAAQS decisions should be based on studies that have been rigorously assessed in an integrative manner not only by EPA but also by the statutorily mandated independent advisory committee, as well as the public review that accompanies this process. EPA's provisional consideration of these studies did not and could not provide that kind of in-depth critical review.

This decision is consistent with EPA's practice in prior NAAQS reviews and its interpretation of the requirements of the CAA. Since the 1970 amendments, the EPA has taken the view that NAAQS decisions are to be based on scientific studies and related information that have been assessed as a part of the pertinent air quality criteria, and has consistently followed this approach. This longstanding interpretation was strengthened by new legislative requirements enacted in 1977, which added section 109(d)(2) of the Act concerning CASAC review of air quality criteria. See 71 FR 61144, 61148 (October 17, 2006) (final decision on review of NAAQS for particulate matter) for a detailed discussion of this issue and EPA's past practice.

As discussed in EPA's 1993 decision not to revise the NAAQS for ozone, ''new'' studies may sometimes be of such significance that it is appropriate to delay a decision on revision of a NAAQS and to supplement the pertinent air quality criteria so the studies can be taken into account (58 FR at 13013–13014, March 9, 1993). In the present case, EPA's provisional consideration of ''new'' studies concludes that, taken in context, the ''new'' information and findings do not materially change any of the broad scientific conclusions regarding the health effects and exposure pathways of ambient CO made in the air quality criteria. For this reason, reopening the air quality criteria review would not be warranted even if there were time to do so under the court order governing the schedule for this rulemaking.

Accordingly, EPA is basing the final decisions in this review on the studies and related information included in the CO air quality criteria that have undergone CASAC and public review. EPA will consider the ''new'' studies for purposes of decision-making in the next periodic review of the CO NAAQS, which EPA expects to begin soon after the conclusion of this review and which will provide the opportunity to fully assess these studies through a more rigorous review process involving EPA, CASAC, and the public. Further discussion of these ''new'' studies can be found in the Response to Comments document.

D. Summary of Proposed Decisions on Standards for Carbon Monoxide

For reasons discussed in the notice of proposed rulemaking, the Administrator proposed to retain the current primary CO standards. With regard to consideration of a secondary standard, the Administrator proposed to conclude that no secondary standards should be set at this time.

E. Organization and Approach to Final Decisions on Standards for Carbon Monoxide

This action presents the Administrator's final decisions in this review of the CO standards. Decisions regarding the primary CO standards are addressed below in section II. Consideration of a secondary CO standard is addressed below in section III. Ambient monitoring methods and network design related to implementation of the CO standards are addressed below in section IV. A discussion of statutory and executive order reviews is provided in section V.

Today's final decisions are based on a thorough review in the Integrated Science Assessment of the latest scientific information on known and potential human health and welfare effects associated with exposure to CO in the environment. These final decisions also take into account: (1) Assessments in the Policy Assessment of the most policy-relevant information in the Integrated Science Assessment as well as quantitative exposure, dose and risk assessments based on that information presented in the Risk and Exposure Assessment; (2) CASAC Panel advice and recommendations, as reflected in its letters to the Administrator and its discussions of drafts of the Integrated Science Assessment, Risk and Exposure Assessment and Policy Assessment at public meetings; (3) public comments received during the development of these documents, either in connection with CASAC Panel meetings or separately; and (4) public comments received on the proposed rulemaking.

II. Rationale for Decisions on the Primary Standards

A. Introduction

This section presents the rationale for the Administrator's decision that the current primary standards are requisite to protect public health with an adequate margin of safety, and that they should be retained. In developing this rationale, EPA has drawn upon an integrative synthesis in the Integrated Science Assessment of the entire body of evidence published through mid-2009 on human health effects associated with the presence of CO in the ambient air. The research studies evaluated in the ISA have undergone intensive scrutiny through multiple layers of peer review, with extended opportunities for review and comment by the CASAC Panel and the public. As with virtually any policy-relevant scientific research, there is uncertainty in the characterization of health effects attributable to exposure to ambient CO. While important uncertainties remain, the review of the health effects information has been extensive and deliberate. In the judgment of the Administrator, this intensive evaluation of the scientific evidence provides an adequate basis for regulatory decision making at this time. This review also provides important input to EPA's research plan for improving our future understanding of the relationships between exposures to ambient CO and health effects.

The health effects information and quantitative exposure/dose assessment were summarized in sections II.B and II.C of the proposal (76 FR at 8162–8172) and are only briefly outlined in sections II.A.2 and II.A.3 below. Responses to public comments specific to the material presented in sections II.A.1 through II.A.3 below are provided in the Response to Comments document.

Subsequent sections of this preamble provide a more complete discussion of the Administrator's rationale, in light of key issues raised in public comments, for concluding that the current standards are requisite to protect public health with an adequate margin of safety and that it is appropriate to retain the current primary CO standards to continue to provide requisite public health protection (section II.B).

1. Overview of Air Quality Information

This section briefly summarizes the information on CO sources, emissions, ambient air concentrations and aspects of associated exposure presented in section II.A of the proposal, as well as in section 1.3 of the Policy Assessment and chapter 2 of the Risk and Exposure Assessment.

Carbon monoxide in ambient air is formed by both natural and anthropogenic processes. In areas of human activity such as urban areas, it is formed primarily by the incomplete combustion of carbon-containing fuels with the combustion conditions influencing the rate of formation. For example, as a result of the combustion

conditions, CO emissions from large fossil-fueled power plants are typically very low because optimized fuel consumption conditions make boiler combustion highly efficient. In contrast, internal combustion engines used in many mobile sources have widely varying operating conditions. As a result, higher and more varying CO formation results from the operation of mobile sources, which continue to be a significant source sector for CO in ambient air (ISA, sections 3.4 and 3.5; 2000 AQCD, section 7.2; REA, section 2.2 and 3.1.3).

Mobile sources are a substantial contributor to total CO emissions, particularly in urban areas (ISA, section 3.5.1.3; REA, section 3.1.3). Highest ambient concentrations in urban areas occur on or near roadways, particularly highly travelled roadways, and decline somewhat steeply with distance (ISA, section 3.5.1.3; REA, section 3.1.3; Baldauf *et al.*, 2008a,b; Zhu *et al.*, 2002). For example, as described in the ISA, a study by Zhu *et al.*, (2002) documented CO concentrations at an interstate freeway to be ten times as high as an upwind monitoring site; concentrations declined rapidly in the downwind direction to levels only approximately one half roadway concentrations within 100 to 300 meters (ISA, section 3.5.1.3, Figure 3–29; Zhu *et al.*, 2002). Factors that can influence the steepness of the gradient include wind direction and other meteorological variables, and on-road vehicle density (ISA, section 3.5.1.3, Figures 3–29 and 3–30; Zhu *et al.*, 2002; Baldauf *et al.*, 2008a, b). These traffic-related ambient concentrations contribute to the higher short-term ambient CO exposures experienced near busy roads and particularly in vehicles, as described in more detail in the REA and PA.

2. Overview of Health Effects Information

This section summarizes information presented in section II.B of the proposal pertaining to health endpoints associated with the range of exposures considered to be most relevant to current ambient CO exposure levels. In recognition of the use of an internal biomarker in evaluating health risk for CO, the following section summarizes key aspects of the use of carboxyhemoglobin as an internal biomarker (section II.A.2.a). This is followed first by a summary of the array of CO-induced health effects and recognition of at-risk subpopulations (section II.A.2.b) and then by a summary of the evidence regarding cardiovascular effects (section II.A.2.c).

a. Carboxyhemoglobin as Biomarker of Exposure and Toxicity

This section briefly summarizes the current state of knowledge, as described in the Integrated Science Assessment, of the role of carboxyhemoglobin in mediating toxicity and as a biomarker of exposure. The section also summarizes the roles of endogenously produced CO and exposure to ambient and nonambient CO in influencing internal CO concentrations and carboxyhemoglobin (COHb) levels.

At this time, as during past reviews, the best characterized mechanism of action of CO is tissue hypoxia caused by binding of CO to hemoglobin to form COHb in the blood (*e.g.*, USEPA, 2000; USEPA, 1991; ISA). Increasing levels of COHb in the blood stream with subsequent decrease in oxygen availability for organs and tissues are of concern in people who have compromised compensatory mechanisms (*e.g.*, lack of capacity to increase blood flow in response to hypoxia), such as those with pre-existing heart disease. For example, the integrative review of health effects of CO indicates that ''the clearest evidence indicates that individuals with CAD [coronary artery disease] are most susceptible to an increase in CO-induced health effects'' (ISA, section 5.7.8).

Carboxyhemoglobin is formed in the blood both from CO originating in the body (endogenous CO)[4] and from CO that has been inhaled into the body (exogenous CO).[5] The amount of COHb that occurs in the blood depends on factors specific to both the physiology of the individual (including disease state) and the exposure circumstances. These include factors associated with an individual's rate of COHb elimination and production of endogenous CO, as well as those that influence the intake of exogenous CO into the blood, such as the differences in CO concentration (and partial pressure) in inhaled air, exhaled air, and blood; duration of a person's exposure to changed CO concentrations in air; and exertion level or inhalation rate (ISA, chapter 4).

Apart from the impairment of oxygen delivery to tissues related to COHb formation, toxicological studies also indicate several other pathways by which CO acts in the body, which involve a wide range of molecular targets and internal CO concentrations (2000 AQCD, sections 5.6–5.9; ISA, section 5.1.3). The role of these alternative less-well-characterized mechanisms in CO-induced health effects at concentrations relevant to the current NAAQS, however, is not clear. New research based on this evidence is needed to further understand these pathways and their linkage to CO-induced effects in susceptible populations. Accordingly, COHb level in blood continues to be well recognized and most commonly used as an important internal dose metric, and is supported by the evidence as the most useful indicator of CO exposure that is related to CO health effects of major concern (ISA, p. 2–4, sections 4.1, 4.2, 5.1.1; 1991 AQCD; 2000 AQCD; 2010 ISA).

b. Nature of Effects and At-Risk Populations

The long-standing body of evidence that has established many aspects of the biological effects of CO continues to contribute to our understanding of the health effects of ambient CO (PA, section 2.2.1). Inhaled CO elicits various health effects through binding to, and associated alteration of the function of, a number of heme-containing molecules, mainly hemoglobin (see *e.g.*, ISA, section 4.1). The best characterized health effect associated with CO levels of concern is decreased oxygen availability to critical tissues and organs, specifically the heart, induced by increased COHb levels in blood (ISA, section 5.1.2). Consistent with this, medical conditions that affect the biological mechanisms which compensate for this effect (*e.g.*, vasodilation and increased coronary blood flow with increased oxygen delivery to the myocardium) can contribute to a reduced amount of oxygen available to key body tissues, potentially affecting organ system function and limiting exercise capacity (2000 AQCD, section 7.1).[6]

This evidence newly available in this review provides additional detail and support to our prior understanding of CO effects and population susceptibility. In this review, the clearest evidence for ambient CO-related effects is available for cardiovascular effects. Using an established framework to characterize the evidence as to likelihood of causal relationships between exposure to ambient CO and

[4] Endogenous CO is produced from biochemical reactions associated with normal breakdown of heme proteins (ISA, section 4.5).

[5] Exogenous CO includes CO emitted to ambient air, CO emitted to ambient air that has infiltrated indoors and CO that originates indoors from sources such as gas stoves, tobacco smoke and gas furnaces (ISA, section 3.6; REA, section 2.2).

[6] For example, people with peripheral vascular diseases and heart disease patients often have markedly reduced circulatory capacity and reduced ability to compensate for increased circulatory demands during exercise and other stress (2000 AQCD, p. 7–7).

specific health effects (ISA, chapter 1), the ISA states that ''Given the consistent and coherent evidence from epidemiologic and human clinical studies, along with biological plausibility provided by CO's role in limiting oxygen availability, it is concluded that a causal relationship is likely to exist between relevant short-term CO exposures and cardiovascular morbidity'' (ISA, p. 2–6, section 2.5.1). Using the same established framework, the ISA describes the evidence as suggestive of causal relationships between relevant ambient CO exposure and several other health effects: Relevant short- and long-term CO exposures and central nervous system (CNS) effects, birth outcomes and developmental effects following long-term exposure, respiratory morbidity following short-term exposure, and mortality following short-term exposure (ISA, section 2.5). However, there is only limited evidence for these relationships, and the current body of evidence continues to indicate cardiovascular effects, particularly effects related to the role of CO in limiting oxygen availability to tissues, as those of greatest concern at low exposures with relevance to ambient concentrations (ISA, chapter 2). The evidence for these effects is further described in section II.A.2.c below.

As described in the proposal, the terms susceptibility, vulnerability, sensitivity, and at-risk are commonly employed in identifying population groups or life stages at relatively higher risk for health risk from a specific pollutant. In the ISA for this review, the term susceptibility has been used broadly to recognize populations that have a greater likelihood of experiencing effects related to ambient CO exposure, with use of the term susceptible populations, as used in the ISA, defined as follows (ISA, section 5.7, p. 5–115):

> Populations that have a greater likelihood of experiencing health effects related to exposure to an air pollutant (*e.g.*, CO) due to a variety of factors including, but not limited to: Genetic or developmental factors, race, gender, lifestage, lifestyle (*e.g.*, smoking status and nutrition) or preexisting disease, as well as population-level factors that can increase an individual's exposure to an air pollutant (*e.g.*, CO) such as socioeconomic status [SES], which encompasses reduced access to health care, low educational attainment, residential location, and other factors.

Thus, susceptible populations are at greater risk of CO effects and are also referred to as *at-risk* in the summary below.

As described in the proposal, the population with pre-existing cardiovascular disease continues to be the best-characterized population at risk of adverse CO-induced effects, with CAD recognized as ''the most important susceptibility characteristic for increased risk due to CO exposure'' (ISA, section 2.6.1). An important factor determining the increased susceptibility of this population is their inability to compensate for the reduction in tissue oxygen levels due to an already compromised cardiovascular system. Individuals with a healthy cardiovascular system (*i.e.,* with healthy coronary arteries) have operative physiologic compensatory mechanisms (*e.g.,* increased blood flow and oxygen extraction) for CO-induced tissue hypoxia and are unlikely to be at increased risk of CO-induced effects (ISA, p. 2–10).[7] In addition, the high oxygen consumption of the heart, together with the inability to compensate for tissue hypoxia, makes the cardiac muscle of a person suffering from CAD a critical target for CO.

Thus, the current evidence continues to support the identification of people with cardiovascular disease as susceptible to CO-induced health effects (ISA, 2–12) and those having CAD as the population with the best-characterized susceptibility (ISA, sections 5.7.1.1 and 5.7.8).[8] An important susceptibility consideration for this population is the inability to compensate for CO-induced hypoxia since individuals with CAD have an already compromised cardiovascular system. This population includes those with angina pectoris (cardiac chest pain), those who have experienced a heart attack, and those with silent ischemia or undiagnosed ischemic heart disease (AHA, 2003). People with other cardiovascular diseases, particularly heart diseases, are also at risk of CO-induced health effects.

Cardiovascular disease comprises many types of medical disorders, including heart disease, cerebrovascular disease (*e.g.,* stroke), hypertension (high blood pressure), and peripheral vascular diseases. Heart disease, in turn, comprises several types of disorders, including ischemic heart disease (coronary heart disease [CHD] or CAD, myocardial infarction, angina), congestive heart failure, and disturbances in cardiac rhythm (2000 AQCD, section 7.7.2.1).[9] Other types of cardiovascular disease may also contribute to increased susceptibility to the adverse effects of low levels of CO (ISA, section 5.7.1.1). For example, evidence with regard to other types of cardiovascular disease such as congestive heart failure, arrhythmia, and non-specific cardiovascular disease, and more limited evidence for peripheral vascular and cerebrovascular disease, indicates that ''the continuous nature of the progression of CAD and its close relationship with other forms of cardiovascular disease suggest that a larger population than just those individuals with a prior diagnosis of CAD may be susceptible to health effects from CO exposure'' (ISA, p. 5–117).

As described in the proposal, several other populations are potentially at risk of CO-induced effects, including: Those with other pre-existing diseases that may already have limited oxygen availability, increased COHb levels or increased endogenous CO production, such as people with obstructive lung diseases, diabetes and anemia; older adults; fetuses during critical phases of development and young infants or newborns; those who spend a substantial time on or near heavily traveled roadways; visitors to high-altitude locations; and people ingesting medications and other substances that enhance endogenous or metabolic CO formation (ISA, section 2.6.1). While the evidence suggests a potential susceptibility of these populations, information characterizing susceptibility for these groups is limited. For example, information is lacking on specific CO exposures or COHb levels that may be associated with health effects in these other groups and the nature of those effects, as well as a way to relate the specific evidence

[7] The other well-studied individuals at the time of the last review were healthy male adults that experienced decreased exercise duration at similar COHb levels during short term maximal exercise. This population was of lesser concern since it represented a smaller sensitive group, and potentially limited to individuals that would engage in vigorous exercise such as competing athletes (1991 AQCD, section 10.3.2).

[8] As recognized in the ISA, ''Although the weight of evidence varies depending on the factor being evaluated, the clearest evidence indicates that individuals with CAD are most susceptible to an increase in CO-induced health effects'' (ISA, p. 2–12).

[9] Coronary artery disease (CAD), often also called coronary heart disease or ischemic heart disease, is a category of cardiovascular disease associated with narrowed heart arteries. Individuals with this disease may have myocardial ischemia, which occurs when the heart muscle receives insufficient oxygen delivered by the blood. Exercise-induced angina pectoris (chest pain) occurs in many of them. Among all patients with diagnosed CAD, the predominant type of ischemia, as identified by electrocardiogram ST segment depression, is asymptomatic (*i.e.,* silent). Patients who experience angina typically have additional ischemic episodes that are asymptomatic (2000 AQCD, section 7.7.2.1). In addition to such chronic conditions, CAD can lead to sudden episodes, such as myocardial infarction (ISA, p. 5–24).

available for the CAD population to these other populations (PA, section 2.2.1).

c. Cardiovascular Effects

Similar to the previous review, results from controlled human exposure studies of individuals with coronary artery disease (CAD) (Adams *et al.,* 1988; Allred *et al.,* 1989a, 1989b, 1991; Anderson *et al.,* 1973; Kleinman *et al.,* 1989, 1998; Sheps *et al.,* 1987[10]) are the ''most compelling evidence of CO-induced effects on the cardiovascular system'' (ISA, section 5.2). Additionally, the use of an internal dose metric, COHb, adds to the strength of the findings in these controlled exposure studies. As a group, these studies demonstrate the role of short-term CO exposures in increasing the susceptibility of people with CAD to incidents of exercise-associated myocardial ischemia.

Among the controlled human exposure studies, the ISA places principal emphasis on the study of CAD patients by Allred *et al.* (1989a, 1989b, 1991) [11] (which was also considered in the previous review) for the following reasons: (1) Dose-response relationships were observed; (2) effects were observed at the lowest COHb levels tested (mean of 2–2.4% COHb [12] following experimental CO exposure), with no evidence of a threshold; (3) objective measures of myocardial ischemia (ST-segment depression) [13] were assessed, as well as the subjective measure of decreased time to induction of angina; (4) measurements were taken both by CO-oximetry (CO-Ox) and by gas chromatography (GC), which provides a more accurate measurement of COHb blood levels [14]; (5) a large number of study subjects were used; (6) a strict protocol for selection of study subjects was employed to include only CAD patients with reproducible exercise-induced angina; and (7) the study was conducted at multiple laboratories around the U.S. This study evaluated changes in time to exercise-induced onset of markers of myocardial ischemia resulting from two short (approximately 1-hour) CO exposures targeted to result in mean study subject COHb levels of 2% and 4%, respectively (ISA, section 5.2.4). In this study, subjects (n = 63) on three separate occasions underwent an initial graded exercise treadmill test, followed by 50 to 70-minute exposures under resting conditions to room air CO concentrations or CO concentrations targeted for each subject to achieve blood COHb levels of 2% and 4%. The exposures were to average CO concentrations of 0.7 ppm (room air concentration range 0–2 ppm), 117 ppm (range 42–202 ppm) and 253 ppm (range 143–357 ppm). After the 50- to 70-minute exposures, subjects underwent a second graded exercise treadmill test, and the percent change in time to onset of angina and time to ST endpoint between the first and second exercise tests was determined. For the two CO exposures, the average post-exposure COHb concentrations were reported as 2.4% and 4.7%, and the subsequent post-exercise average COHb concentrations were reported as 2.0% and 3.9%.[15]

Across all subjects, the mean time to angina onset for control (''room'' air) exposures was approximately 8.5 minutes, and the mean time to ST endpoint was approximately 9.5 minutes (Allred *et al.,* 1989b). Relative to room-air exposure that resulted in a mean COHb level of 0.6% (post-exercise), exposures to CO resulting in post-exercise mean COHb concentrations of 2.0% and 3.9% were observed to decrease the exercise time required to induce ST-segment depression by 5.1% ($p = 0.01$) and 12.1% ($p < 0.001$), respectively. These changes were well correlated with the onset of exercise-induced angina, the time to which was shortened by 4.2% ($p = 0.027$) and 7.1% ($p = 0.002$), respectively, for the two experimental CO exposures (Allred *et al.,* 1989a, 1989b, 1991).[16] As at the time of the last review, while ST-segment depression is recognized as an indicator of myocardial ischemia, the exact physiological significance of the observed changes among those with CAD is unclear (ISA, p. 5–48).

No controlled human exposure studies have been specifically designed to evaluate the effect of controlled short-term exposures to CO resulting in COHb levels lower than a study mean of 2% (ISA, section 5.2.6). However, an important finding of the multi-laboratory study was the dose-response relationship observed between COHb and the markers of myocardial ischemia, with effects observed at the lowest increases in COHb tested, without evidence of a measurable threshold effect. As reported by the authors, the results comparing ''the effects of increasing COHb from baseline levels (0.6%) to 2 and 3.9% COHb showed that each produced further changes in objective ECG measures of ischemia'' implying that ''small increments in COHb could adversely affect myocardial function and produce ischemia'' (Allred *et al.,* 1989b, 1991).

The epidemiological evidence has expanded considerably since the last review including numerous additional studies that are coherent with the evidence on markers of myocardial

[10] Statistical analyses of the data from Sheps *et al.,* (1987) by Bissette *et al.* (1986) indicate a significant decrease in time to onset of angina at 4.1% COHb if subjects that did not experience exercise-induced angina during air exposure are also included in the analyses.

[11] Other controlled human exposure studies of CAD patients (listed in Table 2–2 of the PA, and discussed in more detail in the 1991 and 2000 AQCDs) similarly provide evidence of reduced time to exercise-induced angina associated with elevated COHb resulting from controlled short-duration exposure to increased concentrations of CO.

[12] These levels and other COHb levels described for this study below are based on gas chromatography analysis unless otherwise specified. Matched measurements available for CO-oximetry (CO-Ox) and gas chromatography (GC) in this study indicate CO-Ox measurements of 2.65% (post-exercise mean) and 3.21% (post-exposure mean) corresponding to the GC measurement levels of 2.00% (post-exercise mean) to 2.38% (post-exposure mean) for the lower exposure level assessed in this study (Allred *et al.,* 1991).

[13] The ST-segment is a portion of the electrocardiogram, depression of which is an indication of insufficient oxygen supply to the heart muscle tissue (myocardial ischemia). Myocardial ischemia can result in chest pain (angina pectoris) or such characteristic changes in ECGs or both. In individuals with coronary artery disease, it tends to occur at specific levels of exercise. The duration of exercise required to demonstrate chest pain and/or a 1-mm change in the ST segment of the ECG were key measurements in the multicenter study by Allred *et al.* (1989a, 1989b, 1991).

[14] As stated in the ISA, the gas chromatographic technique for measuring COHb levels ''is known to be more accurate than spectrophotometric measurements, particularly for samples containing COHb concentrations < 5%'' (ISA, p. 5–41). CO-oximetry is a spectrophotometric method commonly used to rapidly provide approximate concentrations of COHb during controlled exposures (ISA, p. 5–41). At the low concentrations of COHb (< 5%) more relevant to ambient CO exposures, co-oximeters are reported to overestimate COHb levels compared to GC measurements, while at higher concentrations, this method is reported to produce underestimates (ISA, p. 4–18).

[15] While the COHb blood level for each subject during the exercise tests was intermediate between the post-exposure and subsequent post-exercise measurements (*e.g.,* mean 2.4–2.0% and 4.7–3.9%), the study authors noted that the measurements at the end of the exercise test represented the COHb concentrations at the approximate time of onset of myocardial ischemia as indicated by angina and ST segment changes. The corresponding ranges of CO-Ox measurements for the two exposures were 2.7–3.2% and 4.7–5.6%. In this document, we refer to the GC-measured mean of 2.0% or 2.0–2.4% for the COHb levels resulting from the lower experimental CO exposure.

[16] Another indicator measured in the study was the combination of heart rate and systolic blood pressure which provides a clinical index of the work of the heart and myocardial oxygen consumption, since heart rate and blood pressure are major determinants of myocardial oxygen consumption (Allred *et al.,* 1991). A decrease in oxygen to the myocardium would be expected to be paralleled by ischemia at lower heart rate and systolic blood pressure. This heart rate-systolic blood pressure indicator at the time to ST-endpoint was decreased by 4.4% at the 3.9% COHb dose level and by a nonstatistically-significant, smaller amount at the 2.0% COHb dose level.

ischemia from controlled human exposure studies of CAD patients (ISA, section 2.7). The most recent set of epidemiological studies in the U.S. have evaluated the associations between ambient concentrations of multiple pollutants (*i.e.,* fine particles or $PM_{2.5}$, nitrogen dioxide, sulfur dioxide, ozone, and CO) at fixed-site ambient monitors and increases in emergency department visits and hospital admissions for specific cardiovascular health outcomes including ischemic heart disease (IHD), myocardial infarction, congestive heart failure (CHF), and cardiovascular diseases (CVD) as a whole (Bell *et al.,* 2009; Koken *et al.,* 2003; Linn *et al.,* 2000; Mann *et al.,* 2002; Metzger *et al.,* 2004; Symons *et al.,* 2006; Tolbert *et al.,* 2007; Wellenius *et al.,* 2005). As noted by the ISA, ''[s]tudies of hospital admissions and [emergency department] visits for IHD provide the strongest [epidemiological] evidence of ambient CO being associated with adverse CVD outcomes'' (ISA, p. 5–40, section 5.2.3). With regard to studies for other measures of cardiovascular morbidity, the ISA notes that ''[t]hough not as consistent as the IHD effects, the effects for all CVD hospital admissions (which include IHD admissions) and CHF hospital admissions also provide evidence for an association of cardiovascular outcomes and ambient CO concentrations'' (ISA, section 5.2.3). While noting the difficulty in determining the extent to which CO is independently associated with CVD outcomes in this group of studies as compared to CO as a marker for the effects of another traffic-related pollutant or mix of pollutants, the ISA concludes that the epidemiological evidence, particularly when considering the copollutant analyses, provides support to the clinical evidence for a direct effect of short-term ambient CO exposure on CVD morbidity (ISA, pp. 5–40 to 5–41).

3. Overview of Human Exposure and Dose Assessment

Our consideration of the scientific evidence in the current review, as at the time of the last review, is informed by results from a quantitative analysis of estimated population exposure and resultant COHb levels. This analysis provides estimates of the percentages of simulated at-risk populations expected to experience daily maximum COHb levels at or above a range of benchmark levels under varying air quality scenarios (*e.g.,* just meeting the current or alternative standards), as well as characterizations of the kind and degree of uncertainties inherent in such estimates. The benchmark COHb levels were identified based on consideration of the evidence discussed in section II.A.2 above. In this section, we provide a short overview of key aspects of the assessment conducted for this review. The assessment is summarized more fully in section II.C of the proposal, discussed in detail in the REA and summarized in the PA (section 2.2.2). The results of the analyses as they relate to considerations of the adequacy of the current standards are discussed in section II.B.3 below.

As noted in the proposal notice, people can be exposed to CO in ambient air when they are outdoors and also when they are in indoor locations into which ambient (outdoor) air has infiltrated (ISA, sections 3.6.1 and 3.6.5). Indoor locations may also contain CO from indoor sources, such as gas stoves and tobacco smoke. Where present, these indoor sources can be important contributors to total CO exposure and can contribute to much greater CO exposures and associated COHb levels than those associated with ambient sources (ISA, section 3.6.5.2). For example, indoor source-related exposures, such as faulty furnaces or other combustion appliances, have been estimated in the past to lead to COHb levels on the order of twice as high as short-term elevations in ambient CO that were more likely to be encountered by the general public (2000 AQCD, p. 7–4). Further, some exposure/dose assessments performed for previous reviews have included modeling simulations both without and with indoor (nonambient) sources (gas stoves and tobacco smoke) to provide context for the assessment of ambient CO exposure and dose (*e.g.,* USEPA, 1992; Johnson *et al.,* 2000), and these assessments have found that nonambient sources have a substantially greater impact on the highest total exposures and COHb levels experienced by the simulated population than do ambient sources (Johnson *et al.,* 2000; REA, sections 1.2 and 6.3). While recognizing this potential for indoor sources, where present, to play a role in CO exposures and COHb levels, the exposure modeling in the current review (described below) did not include indoor CO sources in order to focus on the impact of ambient CO on population COHb levels.

The assessment estimated ambient CO exposure and associated COHb levels in simulated at-risk populations in two urban study areas in Denver and Los Angeles, in which current ambient CO concentrations are below the current standards. Estimates were developed for exposures to ambient CO associated with current ''as is'' conditions (2006 air quality) and also for higher ambient CO concentrations associated with air quality conditions simulated to just meet the current 8-hour standard,[17] as well as for air quality conditions simulated to just meet several potential alternative standards. Although we consider it unlikely that air concentrations in many urban areas across the U.S. that are currently well below the current standards would increase to just meet the 8-hour standard, we recognize the potential for CO concentrations in some areas currently below the standard to increase to just meet the standard. We additionally recognize that this simulation can provide useful information in evaluating the current standard, although we recognize the uncertainty associated with simulating this hypothetical profile of higher CO concentrations that just meet the current 8-hour standard.

The exposure and dose modeling for the assessment, presented in detail in the REA, relied on version 4.3 of EPA's Air Pollutant Exposure model (APEX4.3), which estimates human exposure using a stochastic, event-based microenvironmental approach (REA, chapter 4). The review of the CO standards completed in 1994 relied on population exposure and dose estimates generated from the probabilistic NAAQS exposure model (pNEM), a model that, among other differences from the current modeling approach with APEX4.3, employed a cohort-based approach (Johnson *et al.,* 1992; USEPA, 1992).[18] [19] Each of the model developments since the use of pNEM in that review have been designed to allow APEX to better represent human behavior, human physiology, and

[17] As noted elsewhere, the 8-hour standard is the controlling standard for ambient CO concentrations.

[18] When using the cohort approach, each cohort is assumed to contain persons with identical exposures during the specified exposure period. Thus, variability in exposure will be attributed to differences in how the cohorts are defined, not necessarily reflecting differences in how individuals might be exposed in a population. In the assessment for the review completed in 1994, a total of 420 cohorts were used to estimate population exposure based on selected demographic information (11 groups using age, gender, work status), residential location, work location, and presence of indoor gas stoves (Johnson, *et al.,* 1992; USEPA, 1992).

[19] The use of pNEM in the prior review also (1) relied on a limited set of activity pattern data (approximately 3,600 person-days), (2) used four broadly defined categories to estimate breathing rates, and (3) implemented a geodesic distance range methodology to approximate workplace commutes (Johnson *et al.,* 1992; USEPA, 1992). Each of these approaches used by pNEM, while appropriate given the data available at that time, would tend to limit the ability to accurately model expected variability in the population exposure and dose distributions.

microenvironmental concentrations and to more accurately estimate variability in CO exposures and COHb levels (REA, chapter 4).[20]

As used in the current assessment, APEX probabilistically generates a sample of hypothetical individuals from an actual population database and simulates each individual's movements through time and space (*e.g.,* indoors at home, inside vehicles) to estimate his or her exposure to ambient CO (REA, chapter 4). Based on exposure concentrations, minute-by-minute activity levels, and physiological characteristics of the simulated individuals (see REA, chapters 4 and 5), APEX estimates the level of COHb in the blood for each individual at the end of each hour based on a nonlinear solution to the Coburn-Forster-Kane equation (REA, section 4.4.7).

As discussed in section II.A.2.b above, people with cardiovascular disease are the population of primary focus in this review, and, more specifically, coronary artery disease, also known as coronary heart disease, is the ''most important susceptibility characteristic for increased risk due to CO exposure'' (ISA, p. 2–11). Controlled human exposure studies have provided quantitative COHb dose-response information for this specific population with regard to effects on markers of myocardial ischemia. Accordingly, based on the current evidence with regard to quantitative information of COHb levels and association with specific health effects, the at-risk populations simulated in the quantitative assessment were (1) adults with CHD (also known as IHD or CAD), both diagnosed and undiagnosed, and (2) adults with any heart diseases, including undiagnosed ischemia.[21] Evidence characterizing the nature of specific health effects of CO in other populations is limited and does not include specific COHb levels related to health effects in those groups. As a result, the quantitative assessment does not develop separate quantitative dose estimates for populations other than those with CHD or HD.

APEX simulations performed for this review focused on exposures to ambient CO occurring in eight microenvironments,[22] absent any contribution to microenvironment concentrations from indoor (nonambient) CO sources. Previous assessments, that have included modeling simulations both with and without certain indoor sources, indicated that the impact of such sources can be substantial with regard to the portion of the at-risk population experiencing higher exposures and COHb levels (Johnson *et al.,* 2000). While we are limited with regard to information regarding CO emissions from indoor sources today and how they may differ from the time of the 2000 assessment, we note that ambient contributions have notably declined, and indoor source contributions from some sources may also have declined. Thus, as indicated in the Policy Assessment, we have no firm basis to conclude a different role for indoor sources today with regard to contribution to population CO exposure and COHb levels.

In considering the REA dose estimates in the Policy Assessment, staff considered estimates of the portion of the simulated at-risk populations estimated to experience daily maximum end-of-hour absolute COHb levels above identified benchmark levels (at least once and on multiple occasions), as well as estimates of the percentage of population person-days (the only metric available from the modeling for the 1994 review), and also population estimates of daily maximum ambient contribution to end-of-hour COHb levels.[23] In identifying COHb benchmark levels of interest, primary attention was given to the multi-laboratory study in which COHb was analyzed by the more accurate GC method (Allred *et al.,* 1989a, 1989b, 1991) discussed in section II.A.2.c above. As summarized in the proposal, the Policy Assessment recognized distinctions between the REA ''baseline'' (arising from prior ambient exposure and endogenous CO production) and the pre-exposure COHb levels in the controlled human exposure study (arising from ambient and nonambient exposure history, as well as from endogenous CO production), and also noted the impact of ''baseline'' COHb levels on COHb levels occurring in response to short ambient CO exposure events such as those simulated in the REA.

Numerous improvements have been made over the last decade that have reduced the uncertainties associated with the models used to estimate COHb levels resulting from ambient CO exposures under different air quality conditions, including those associated with just meeting the current CO NAAQS (REA, section 4.3). This progression in exposure model development has led to the model currently used by the agency (APEX4.3), which has an enhanced capacity to estimate population CO exposures and more accurately predicts COHb levels in persons exposed to CO. Our application of APEX4.3 in this review, using updated data and new algorithms to estimate exposures and doses experienced by individuals, better represents the variability in population exposure and COHb dose levels than the model version used in previous CO assessments.[24] However, while APEX 4.3 is greatly improved when compared with previously used exposure models, its application is still limited with regard to data to inform our understanding of spatial relationships in ambient CO concentrations and within microenvironments of particular interest. Further information regarding model improvements and exposure modeling uncertainties is summarized in section 2.2.2 of the Policy Assessment and described in detail in chapter 7 of the REA.

Taking into consideration improvements in the model algorithms and data since the last review, and having identified and characterized these uncertainties, the Policy Assessment concludes that the estimates associated with the current analysis, at a minimum, better reflect the full distribution of exposures and dose as compared to results from the 1992 analysis. As noted in the Policy Assessment, however, potentially greater uncertainty remains in our characterization of the upper and lower

[20] APEX4.3 includes new algorithms to (1) simulate longitudinal activity sequences and exposure profiles for individuals, (2) estimate activity-specific minute-by-minute oxygen consumption and breathing rates, (3) address spatial variability in home and work-tract ambient concentrations for commuters, and (4) estimate event-based microenvironmental concentrations (PA, section 2.2.2).

[21] As described in section1.2 above, this is the same population group that was the focus of the CO NAAQS exposure/dose assessments conducted previously (*e.g.,* USEPA, 1992; Johnson *et al.,* 2000).

[22] The 8 microenvironments modeled in the REA comprised a range of indoor and outdoor locations including residences as well as motor vehicle-related locations such as inside vehicles, and public parking and fueling facilities, where the highest exposures were estimated (REA, sections 5.9 and 6.1).

[23] As summarized in the proposal and described more fully in the REA and PA, absolute COHb refers to the REA estimates of COHb levels resulting from endogenously produced CO and exposure to ambient CO (in the absence of any nonambient sources). The additional REA estimates of ambient CO exposure contribution to COHb levels were calculated by subtracting COHb estimates obtained in the absence of CO exposure—*i.e.,* that due to endogenous CO production alone (see REA, Appendix B.6)—from the corresponding end-of-hour absolute COHb estimates for each simulated individual. Thus, the REA reports estimates of the maximum end-of-hour ambient contributions across the simulated year, in addition to the maximum absolute end-of hour COHb levels.

[24] APEX4.3 provides estimates for percent of population projected to experience a single or multiple occurrences of a daily maximum COHb level above the various benchmark levels, as well as percent of person-days.

percentiles of the distribution of population exposures and COHb dose levels relative to that of other portions of the respective distribution. When considering the overall quality of the current exposure modeling approach, the algorithms, and the input data used, alongside the identified limitations and uncertainties, the REA and Policy Assessment conclude that the quantitative assessment provides reasonable estimates of CO exposure and COHb dose for the simulated population the assessment is intended to represent (*i.e.,* the population residing within the urban core of each study area). The Policy Assessment additionally notes the impact on the REA dose estimates for ambient CO contribution to COHb of the lack of nonambient sources in the model simulations. This aspect of the assessment design may contribute to higher estimates of the contribution of short-duration ambient CO exposures to total COHb than would result from simulations that include the range of commonly encountered CO sources beyond just those contributing to ambient air CO concentrations. Although the specific quantitative impact of this on estimates of population percentages discussed in this document is unknown, consideration of COHb estimates from the 2000 assessment indicates a potential for the inclusion of nonambient sources to appreciably affect absolute COHb (REA, section 6.3) and accordingly implies the potential, where present, for an impact on overall ambient contribution to a person's COHb level. Key results of the exposure and dose analyses were presented in the Policy Assessment and summarized in the proposal (Tables 1 and 2 of the proposal).

B. Adequacy of the Current Primary Standards

In considering the evidence and quantitative exposure and dose estimates with regard to judgments on the adequacy afforded by the current standards, the final decision is largely a public health policy judgment. A final decision must draw upon scientific information and analyses about health effects and risks, as well as judgments about how to consider the range and magnitude of uncertainties that are inherent in the scientific evidence and analyses. Our approach to informing these judgments is based on the recognition that the available health effects evidence generally reflects a continuum, consisting of ambient levels at which scientists generally agree that health effects are likely to occur, through lower levels at which the likelihood and magnitude of the response become increasingly uncertain. This approach is consistent with the requirements of the NAAQS provisions of the Act and with how EPA and the courts have historically interpreted the Act. These provisions require the Administrator to establish primary standards that, in the Administrator's judgment, are requisite to protect public health with an adequate margin of safety. In so doing, the Administrator seeks to establish standards that are neither more nor less stringent than necessary for this purpose. The Act does not require that primary standards be set at a zero-risk level, but rather at a level that avoids unacceptable risks to public health, including the health of sensitive groups.[25]

In evaluating whether it is appropriate to revise the current CO standards, the Administrator's considerations build on the general approach used in the last review and reflect the broader body of evidence and information now available. The approach used is based on an integration of information on health effects associated with exposure to ambient CO; expert judgment on the adversity of such effects on individuals; and policy judgments as to when the standards are requisite to protect public health with an adequate margin of safety, which are informed by air quality and related analyses, quantitative exposure and risk assessments when possible, and qualitative assessment of impacts that could not be quantified. The Administrator has taken into account both evidence-based and quantitative exposure- and risk-based considerations in developing conclusions on the adequacy of the current primary CO standards.

The Administrator's proposed conclusions on the adequacy of the current primary standards are summarized below (section II.B.1), followed by consideration of comments received on the proposal (section II.B.2) and the Administrator's final decision with regard to the adequacy of the current primary standards (II.B.3).

[25] The sensitive population groups identified in a NAAQS review may (or may not) be comprised of low income or minority groups. Where low income/minority groups are among the sensitive groups, the rulemaking decision will be based on providing protection for these and other sensitive population groups. To the extent that low income/minority groups are not among the sensitive groups, a decision based on providing protection of the sensitive groups would be expected to provide protection for the low income/minority groups (as well as any other less sensitive population groups).

1. Rationale for Proposed Decision

At the time of the proposal, in considering the adequacy of the current standards, the Administrator carefully considered the available evidence and conclusions contained in the Integrated Science Assessment; the information, exposure/dose assessment, rationale and conclusions presented in the Policy Assessment; the advice and recommendations from CASAC; and public comments as of that date. In so doing, the Administrator noted the following: (1) The long-standing evidence base concerning effects associated with exposure to CO, including the key role played by hypoxia (reduced oxygen availability) induced by increased COHb blood levels, and the use of COHb as the bioindicator and dose metric for evaluating CO exposure and the potential for health effects; (2) the strong evidence of cardiovascular effects of short-term CO exposures including the evidence from controlled human exposure studies that demonstrate a reduction in time to onset of exercise-induced markers of myocardial ischemia in response to increased COHb, and the health significance of responses observed at the 2% COHb level induced by 1-hour CO exposure, as compared to higher COHb levels; and (3) the identification of people with cardiovascular disease as a key population at risk from short-term ambient CO exposures. In the proposal, as at the time of the last review, the Administrator additionally considered and took particular note of the exposure and dose modeling results, recognizing key limitations and uncertainties, and in light of judgments noted above regarding the health significance of findings from the controlled human exposure studies, placing less weight on the health significance of infrequent or rare occurrences of COHb levels at or just above 2% and more weight to the significance of repeated such occurrences, as well as occurrences of higher COHb levels.

The Administrator also considered the newly available and much-expanded epidemiological evidence, including the complexity associated with quantitative interpretation of these studies with regard to CO, particularly the few studies available in areas where the current standards are met. Further, the Administrator considered the advice of CASAC, including their overall agreement with the Policy Assessment conclusion that the current evidence and quantitative exposure and dose estimates provide support for retaining the current standards, their view that, in

light of the epidemiological studies, revisions to lower the standards should be considered and their preference for a lower standard, and also their advice regarding the complications associated with interpreting the epidemiological studies for CO. Although CASAC expressed a preference for a lower standard, CASAC also indicated that the current evidence provides support for retaining the current suite of standards and CASAC's recommendations appear to recognize that their preference for a lower standard was contingent on a judgment as to the weight to be placed on the epidemiological evidence. For the reasons explained in the proposal, after full consideration of CASAC's advice and the epidemiological evidence, as well as its associated uncertainties and limitations, the Administrator proposed to judge those uncertainties and limitations to be too great for the epidemiological evidence to provide a basis for revising the current standards.

Taking all these considerations together, the Administrator proposed to conclude that the current suite of standards provides a very high degree of protection for the COHb levels and associated health effects of concern, as indicated by the extremely low estimates of occurrences, and provides slightly less but a still high degree of protection for the effects associated with lower COHb levels, the physiological significance of which is less clear. The Administrator additionally proposed to conclude that consideration of the epidemiological studies does not lead her to identify a need for any greater protection. Thus, the Administrator proposed to conclude that the current suite of standards provides an adequate margin of safety against adverse effects associated with short-term ambient CO exposures. For these and all of the reasons discussed above, and recognizing the CASAC conclusion that, overall, the current evidence and REA results provide support for retaining the current standards, the Administrator proposed to conclude that the current suite of primary CO standards is requisite to protect public health with an adequate margin of safety from effects of ambient CO.

2. Comments on Adequacy

In considering comments on the adequacy of the current standards, the Administrator first notes the advice and recommendations from CASAC. In the context of CASAC's review of the documents prepared during the course of the review, CASAC sent EPA five letters providing advice regarding assessment and interpretation of the available scientific evidence and the REA for the purposes of judging the adequacy of the current CO standards (Brain and Samet, 2009; Brain and Samet, 2010a; Brain and Samet, 2010b; Brain and Samet, 2010c; Brain and Samet, 2010d). In conveying comments on the draft Policy Assessment, CASAC agreed with the conclusion that the current evidence provides support for retaining the current suite of standards, while they also expressed a preference for a lower standard and stated that the epidemiological evidence could indicate the occurrence of adverse health effects at levels of the standards (Brain and Samet, 2010c). With regard to the interpretation of epidemiological studies on CO, CASAC's collective advice included recommendations regarding the weight to be placed on the epidemiological evidence (Brain and Samet, 2010c), as well as cautionary statements regarding interpretation of the epidemiological studies. Such statements included the observation that ''[d]istinguishing the effects of CO per se from the consequences of CO as a marker of pollution or vehicular traffic is a challenge, which [the ISA] needs to confront as thoroughly as possible'' (Brain and Samet, 2009, p. 2). In another letter CASAC further cautioned (Brain and Samet, 2010d, p. 2):

> The problem of co-pollutants serving as potential confounders is particularly problematic for CO. Since exposure levels for CO are now low, consideration needs to be given to the possibility that in some situations CO may be a surrogate for exposure to a mix of pollutants generated by fossil fuel combustion. A better understanding of the possible role of co-pollutants is relevant to regulation and to the design, analysis, and interpretation of epidemiologic studies on the health effects of CO.

CASAC additionally noted concerns regarding the spatial coverage of the existing CO monitoring network and the sensitivity of deployed monitors (Brain and Samet, 2009; Brain and Samet, 2010a; Brain and Samet, 2010b; Brain and Samet, 2010d). On a related note, they cautioned that ''[u]nderstanding the extent of exposure measurement error is critical for evaluating epidemiological evidence'' (Brain and Samet, 2009).

General comments from the public based on relevant factors that either support or oppose retention of the current primary CO standards are addressed in this section. Other specific public comments related to consideration of the adequacy of the current standards, as well as general comments based on implementation-related factors that are not a permissible basis for considering the need to revise the current standards, are addressed in the Response to Comments document.

The public comments received on the proposal were divided with regard to support for the Agency's proposed conclusion as to the adequacy of the current standards. All of the state and local environmental agencies or governments that provided comments on the standards concurred with EPA's proposed conclusions as did the three industry commenters. All of these commenters generally noted their agreement with the rationale provided in the proposal, with some additionally citing CASAC's recognition of support in the evidence for the adequacy of the current standards. Some of these commenters noted agreement with the weight given to the epidemiological studies in the proposal and also noted the little change in exposure/risk estimates since the time of the last review. One commenter additionally stated their view that the REA overstates the exposure and risk associated with the current standards.

As described in section II.B.3 below, the EPA generally agrees with these commenters regarding the adequacy of the current CO standards and with CASAC that the evidence provides support for the conclusion that the current CO standards protect public health with an adequate margin of safety. EPA additionally has given consideration to CASAC's advice regarding interpretation of epidemiological evidence for CO, recognizing the limitations associated with its use in drawing quantitative interpretations regarding levels of ambient CO related to health outcomes.

Two submissions recommending revision of the standards were received from national environmental or public health organizations. Additional submissions recommending revision were received from a private consultant; a group of scientists, physicians, and others; and a group of private citizens. In support of their position, these commenters variously cited CASAC comments regarding emphasis to give epidemiological studies and CASAC's stated preference for a lower standard. These submissions generally disagreed with EPA's consideration of the epidemiological evidence in the proposal and recommended that EPA give greater emphasis to epidemiological studies of a range of endpoints, including developmental and respiratory effects, based on the commenters' view that the epidemiological studies provided evidence of harm associated with ambient CO levels below the current

standards and inadequate protection for sensitive populations. Among these submissions, those that specified levels for revised standards recommended levels that were no higher than the lowest part of the ranges for the two standards that were identified for consideration in the Policy Assessment and the example options that CASAC suggested for inclusion in the Policy Assessment. Additionally, one commenter described the view that the CO standards should be revised to levels at or below the range of CO concentrations in exhaled breath of healthy non-smokers.

EPA generally disagrees with these commenters regarding conclusions that can be drawn from the evidence, including the epidemiological studies, pertaining to the adequacy of the current CO standards. In considering the adequacy of the current standards, it is important to consider both the extent to which the evidence supports a causal relationship between ambient CO exposures and adverse health effects, as well as the extent to which there is evidence pertinent to such effects under air quality conditions in which the current standards are met. With regard to the latter point, and focusing on the epidemiological evidence, it is the studies involving air quality conditions in which the current standards were met that are most informative in evaluating the adequacy of the standards (PA, p. 2–30). We note that very few of the epidemiological studies observing an association of cardiovascular disease-related outcomes with short-term CO concentrations (or those observing associations for other health effects) were conducted in areas that met the current standards throughout the period of study, thus limiting their usefulness with regard to judging the adequacy of the current standards (PA, pp. 2–33, 2–36).

Further, as CASAC has cautioned, ''the problem of co-pollutants serving as potential confounders is particularly problematic for CO'' (Brain and Samet, 2010d). While some CO epidemiological studies have applied the commonly used statistical method, two-pollutant regression models, to inform conclusions regarding CO as the pollutant eliciting the effects in these studies, and while, in some studies, the CO associations remain robust after adjustment for another traffic combustion-related pollutant, such as $PM_{2.5}$ or nitrogen dioxide (NO_2) (PA, pp. 2–36 to 2–37), the potential exists for there to be etiologically relevant pollutants that are correlated with CO yet absent from the analysis, particularly given the many pollutants associated with fossil fuel combustion. The CASAC specifically recognized this potential in stating that ''consideration needs to be given to the possibility that in some situations CO may be a surrogate for exposure to a mix of pollutants generated by fossil fuel combustion'' and ''a better understanding of the possible role of co-pollutants is relevant to * * * the interpretation of epidemiologic studies on the health effects of CO'' (Brain and Samet, 2010d).

In light of these issues related to potential confounding by co-pollutants in the case of CO, uncertainty related to exposure error for CO is of particular concern in quantitatively interpreting the epidemiological evidence (*e.g.,* with regard to ambient concentrations contributing to health outcomes).[26] As noted above, CASAC cautioned the Agency on the importance of understanding the extent of exposure error in evaluating the epidemiological evidence for CO (Brain and Samet, 2009). There are two aspects to the epidemiological studies in the specific case of CO (as contrasted with other pollutants such as PM and NO_2) that may contribute exposure error in the studies (PA, pp. 2–34 to 2–38; 76 FR 8177–8178). The first relates to the uncertainty associated with quantitative interpretation of the epidemiological study results at low ambient concentrations in light of the sizeable portion of ambient CO measurements that are at or below monitor method detection limits (MDLs). As described in the proposal, uncertainty related to the prevalence of ambient CO monitor concentrations at or below MDLs is a greater concern for the more recently available epidemiological studies in which the study areas have much reduced ambient CO concentrations compared with those in the past (PA, pp. 2–37 to 2–38). This complicates our interpretation of specific ambient CO concentrations associated with health effects (ISA, p. 3–91; Brain and Samet, 2010d), providing us with reduced confidence in quantitative interpretations of epidemiological studies for CO. Additionally, as described in the proposal, there is uncertainty and potential error associated with exposure estimates in the CO epidemiological studies that relate to the use of area-wide or central-site monitor CO concentrations in light of information about the steep gradient in CO concentrations with distance from source locations such as highly-trafficked roadways (ISA, section 3.5.1.3). As a result of differences in factors related to pollutant formation, this gradient is steeper for CO than for other traffic combustion-related pollutants, such as $PM_{2.5}$ and NO_2, contributing to a greater potential for exposure misclassification in the case of CO by the reliance on central site monitors in the CO epidemiological studies. Thus, as noted in the proposal, we recognize that the expanded body of epidemiological evidence available in this review includes its own set of uncertainties which complicates its interpretation, particularly with regard to ambient concentrations that may be eliciting health outcomes.

In our integrated assessment across all types of evidence in the ISA for this review, we conclude that a causal relationship is likely to exist for short-term exposures to ambient concentrations of CO and cardiovascular morbidity. In reaching this conclusion, the ISA notes that the most compelling evidence comes from the controlled human exposure studies (ISA, p. 2–5), which also document a significant dose-response relationship over a range of COHb concentrations relevant to consideration of the NAAQS (ISA, p. 2–13). In considering the epidemiological evidence for relevant cardiovascular outcomes, which includes multiple studies reporting associations with ambient CO concentrations under conditions when the current standards were not met (PA, p. 2–30), the ISA notes that these studies are coherent with the findings from the controlled human exposure studies (ISA, p. 2–17). However, as summarized here, various aspects of the evidence complicate quantitative interpretation of it with regard to ambient concentrations that might be eliciting the reported health outcomes.

An additional complication to our consideration of the CO epidemiological evidence is that, in contrast to the health effects evidence for all other criteria pollutants, the epidemiological studies for CO use a different exposure/dose metric from that which is the focus of the broader health evidence base, and

[26] In contrasting the strength of the epidemiological evidence available for the 2000 AQCD with that in the current review, the ISA notes that uncertainties identified in 2000 remain, including the ability of community fixed-site monitors to represent spatially variable ambient CO concentrations and personal exposures; the small expected increase in COHb due to ambient CO concentrations; the lack of biological plausibility for health effects to occur at such COHb levels, even in diseased individuals; and the possibility that ambient CO is serving as a surrogate for a mixture of combustion-related pollutants. These uncertainties complicate the quantitative interpretation of the epidemiologic findings, ''particularly regarding the biological plausibility of health effects occurring at COHb levels resulting from exposures to ambient CO concentrations measured at AQS monitors'' (ISA, pp. 2–16 to 2–17).

additional information that might be used to bridge this gap is lacking. In the case of CO, the epidemiological studies use air concentration as the exposure/dose metric, while much of the broader health effects evidence for CO, and particularly that related to cardiovascular effects, demonstrates and focuses on an internal biomarker of CO exposure (COHb) which has been considered a critical key to CO toxicity.[27] The strong evidence describing the role of COHb in CO toxicity is important to consider in interpreting the CO epidemiological studies and contributes to the biological plausibility of the ischemia-related health outcomes that have been associated with ambient CO concentrations. Yet, we do not have information on the COHb levels of epidemiological study subjects that we can evaluate in the context of the COHb levels eliciting health effects in the controlled human exposure studies. Further, we lack additional information on the CO exposures of the epidemiological study subjects to both ambient and nonambient sources of CO that might be used to estimate their COHb levels and bridge the gap between the two study types. Additionally the ISA recognizes that the changes in COHb that would likely be associated with exposure to the low ambient CO concentrations assessed in some of the epidemiological studies would be smaller than changes associated with ''substantially reduced [oxygen] delivery to tissues,'' that might plausibly lead to the outcomes observed in those studies, with additional investigation needed to determine whether there may be another mechanism of action for CO that contributes to the observed outcomes at low ambient concentrations (ISA, p. 5–48). Thus, there are uncertainties associated with the epidemiological evidence that ''complicate the quantitative interpretation of the epidemiologic findings, particularly regarding the biological plausibility of health effects occurring at COHb levels resulting from exposures to the ambient CO concentrations'' assessed in these studies (ISA, p. 2–17).

With regard to health effects other than cardiovascular outcomes, in addition to noting the complications cited above with regard to quantitative interpretation of the epidemiological evidence, we note that the evidence for these other categories of health effects is considered limited and only suggestive of a causal relationship with relevant exposures to CO in ambient air, or inadequate to infer such a relationship, or it supports the conclusion that such a relationship is not likely (see section II.A.2.b above). As described in the proposal sections II.B.2 and II.D.2.a, with regard to categories of health effects or outcomes for which the evidence is considered suggestive, evidence is lacking that might lend biological plausibility to epidemiological study results, and also sufficiently rule out the role of chance, bias and confounding in the epidemiological associations observed, for outcomes such as developmental or respiratory (ISA, chapters 1 and 2).

Thus, EPA disagrees with the commenters' conclusion that the epidemiological evidence establishes that a range of health effects, including developmental or respiratory effects, are occurring as a result of exposures to CO in ambient air at or below the current standards. We additionally disagree with commenters' statements that imply EPA has inadequately considered the evidence with regard to protection of sensitive populations and to the protection provided by the CO standards. As noted in section II.A.2.b above, EPA's assessment of the current evidence presented in the Integrated Science Assessment concludes that ''the most important susceptibility characteristic for increased risk due to CO exposure is [CAD or CHD]'' (ISA, p. 2–10). Accordingly, the proposal recognized people with cardiovascular disease as a key population at risk from short-term ambient CO exposures (proposal, section II.D.4). However, based on assessment of the evidence in the ISA, the proposal and other documents in this review also recognize the potential for susceptibility for several other populations and lifestages, including people with pre-existing diseases that may already have limited oxygen availability to tissues, increased COHb levels or increased endogenous CO production, older adults, and fetuses during critical phases of development (as summarized in section II.A.2.b above). For these groups and lifestages, the evidence is incomplete with regard to specific CO exposures or COHb levels that may be associated with health effects in these groups and the nature of those effects, as well as a way to relate the specific evidence available for the CAD population to the limited evidence for these other populations. Further, the currently available evidence does not indicate a greater susceptibility for any of the other populations or lifestages recognized as potentially at risk from exposure to ambient CO. In reaching a decision on the adequacy of the current standards in protecting public health in section II.B.3 below, however, the Administrator has considered EPA's conclusions with regard to the effects likely to be causally associated with exposure to ambient CO and population groups particularly at risk, as well as those regarding the evidence with regard to the potential for other effects and sensitive groups, and the associated uncertainty. In so doing, as indicated below, the Administrator judges the current standards to provide the requisite protection for public health, including the health of sensitive populations, with an adequate margin of safety.

3. Conclusions Concerning Adequacy of the Primary Standards

Having carefully considered the public comments, as discussed above, the Administrator believes that the fundamental scientific conclusions on the effects of CO in ambient air reached in the Integrated Science Assessment and Policy Assessment, summarized in sections II.B and II.D of the proposal remain valid. Additionally, the Administrator believes the judgments she reached in the proposal (section II.D.4) with regard to consideration of the evidence and quantitative exposure/dose assessments and advice from CASAC remain appropriate. Thus, as described below, the Administrator concludes that the current primary standards provide the requisite protection of public health with an adequate margin of safety and should be retained.[28]

In considering the adequacy of the current suite of primary CO standards, the Administrator has carefully considered the available evidence and conclusions contained in the Integrated Science Assessment; the information, exposure/dose assessment, rationale and conclusions presented in the Policy

[27] In the case of the only other criteria pollutant for which the health evidence relies on an internal dose metric—lead—the epidemiological studies also use that metric. For lead (Pb), in contrast to CO, the epidemiological evidence is focused on associations of Pb-related health effects with measurements of Pb in blood, providing a direct linkage between the pollutant, via the internal biomarker of dose, and the health effects. Thus, for Pb, as compared to the case for CO, we have less uncertainty in our interpretations of the epidemiological studies with regard to the pollutant responsible for the health effects observed. For other criteria pollutants, including PM and NO_2, air concentrations are used as the exposure/dose metric in both the epidemiological studies and the other types of health evidence. Thus, there is no comparable aspect in the PM or NO_2 evidence base.

[28] As explained below in section IV.A, EPA is repromulgating the Federal Reference Method (FRM) for CO, as set forth in Appendix C of 40 CFR part 50. Consistent with EPA's decision to retain the standards, the recodification clarifies and updates the text of the FRM, but does not make substantive changes to it.

Assessment; the advice and recommendations from CASAC; and public comments. The Administrator places primary consideration on the evidence obtained from controlled human exposure studies that demonstrates a reduction in time to onset of exercise-induced markers of myocardial ischemia in response to increased COHb resulting from short-term CO exposures, and recognizes the greater significance accorded both to larger reductions in time to myocardial ischemia and to more frequent occurrences of myocardial ischemia. As at the time of the review completed in 1994, the Administrator also takes note of the results for the modeling of exposures to ambient CO under conditions simulated to just meet the current, controlling, 8-hour standard in two study areas, as described in the REA and Policy Assessment, and the public health significance of those results. She also considers the newly available and much-expanded epidemiological evidence, including the complexity associated with quantitative interpretation of these studies, particularly the few studies available in areas where the current standards are met. In so doing, she notes that in considering the adequacy of the current standards, it is important to consider both the extent to which the evidence supports a causal relationship between ambient CO exposures and adverse health effects, as well as the extent to which there is evidence pertinent to such effects under air quality conditions in which the current standards are met. Further, the Administrator considers the advice of CASAC, including both their overall agreement with the Policy Assessment conclusion that the current evidence and quantitative exposure and dose estimates provide support for retaining the current standards, as well as their view that in light of the epidemiological studies, revisions to lower the standards should be considered and their preference for a lower standard.

As an initial matter, the Administrator places weight on the long-standing evidence base that has established key aspects of CO toxicity that are relevant to this review as they were to the review completed in 1994. These aspects include the key role played by hypoxia (reduced oxygen availability) induced by increased COHb blood levels, the identification of people with cardiovascular disease as a key population at risk from short-term ambient CO exposures, and the use of COHb as the bioindicator and dose metric for evaluating CO exposure and the potential for health effects. The Administrator also recognizes the Integrated Science Assessment's conclusion that a causal relationship is likely to exist between relevant short-term exposures to CO and cardiovascular morbidity.

In placing weight on the controlled human exposure studies, the Administrator also recognizes the uncertain health significance associated with the smaller responses to the lowest COHb level assessed in the study given primary consideration in this review (Allred *et al.,* 1989a, 1989b, 1991) and with single occurrences of such responses. In the study by Allred *et al.* (1989a, 1989b, 1991), a 4–5% reduction in time (approximately 30 seconds) to the onset of exercise-induced markers of myocardial ischemia was associated with the 2% COHb level induced by 1-hour CO exposure. In considering the significance of the magnitude of the time decrement to onset of myocardial ischemia observed at the 2% COHb level induced by short-term CO exposure, as well as the potential for myocardial ischemia to lead to more adverse outcomes, the EPA generally places less weight on the health significance associated with infrequent or rare occurrences of COHb levels at or just above 2% as compared to that associated with repeated occurrences and occurrences of appreciably higher COHb levels in response to short-term CO exposures. For example, at the 4% COHb level, the study by Allred *et al.,* (1989a, 1989b, 1991) observed a 7–12% reduction in time to the onset of exercise-induced markers of myocardial ischemia. The Administrator places more weight on this greater reduction in time to onset of exercise-induced markers compared to the reduction in time to onset at 2% COHb. The Administrator also notes that at the time of the 1994 review, an intermediate level of approximately 3% COHb was identified as a level at which adverse effects had been demonstrated in persons with angina. Now, as at the time of the 1994 review, the Administrator primarily considers the 2% COHb level, resulting from 1-hour CO exposure, in the context of a margin of safety against effects of concern that have been associated with higher COHb levels, such as 3–4% COHb.

The Administrator additionally takes note of the now much-expanded evidence base of epidemiological studies, including the multiple studies that observe positive associations between cardiovascular outcomes and short-term ambient CO concentrations across a range of CO concentrations, including conditions above as well as below the current NAAQS. She notes particularly the Integrated Science Assessment conclusion that the findings of CO-associated cardiovascular effects in these studies are logically coherent with the larger, long-standing health effects evidence base for CO and the conclusions drawn from it regarding cardiovascular disease-related susceptibility. In further considering the epidemiological evidence base with regard to the extent to which it provides support for conclusions regarding adequacy of the current standards, the Administrator takes note of CASAC's conclusions that ''[i]f the epidemiological evidence is given additional weight, the conclusion could be drawn that health effects are occurring at levels below the current standard, which would support the tightening of the current standard'' (Brain and Samet, 2010c). Additionally, the Administrator places weight on the final Policy Assessment consideration of aspects that complicate quantitative interpretation of the epidemiological studies with regard to ambient concentrations that might be eliciting the reported health outcomes.

For purposes of evaluating the adequacy of the current standards, the Administrator takes note of the multiple complicating features of the epidemiological evidence base, as described in more detail in the final Policy Assessment and in section II.D.2.a of the proposal. First, while a number of studies observed positive associations of cardiovascular disease-related outcomes with short-term CO concentrations, very few of these studies were conducted in areas that met the current standards throughout the period of study. Additionally, in CASAC's advice regarding interpretation of the currently available evidence, they stated that ''[t]he problem of co-pollutants serving as potential confounders is particularly problematic for CO'' and that given the currently low ambient CO levels, there is a possibility that CO is acting as a surrogate for a mix of pollutants generated by fossil fuel combustion. The CASAC further stated that ''[a] better understanding of the possible role of co-pollutants is relevant to regulation'' (Brain and Samet, 2010d). As described in the Policy Assessment and summarized in section II.B.2 above, there are also uncertainties related to representation of ambient CO exposures given the steep concentration gradient near roadways, as well as the prevalence of measurements below the MDL across the database. The CASAC additionally indicated the need to consider the potential for confounding effects of

indoor sources of CO (Brain and Samet, 2010c). As discussed in section II.D.2.a of the proposal, the interpretation of epidemiological studies for CO is further complicated because, in contrast to the situation for all other criteria pollutants, the epidemiological studies for CO use an exposure/dose metric (air concentration) that differs from the metric commonly used in the other key CO health studies (COHb).

The Administrator notes that although CASAC expressed a preference for a lower standard, CASAC also indicated that the current evidence provides support for retaining the current suite of standards. CASAC's recommendations appear to recognize that their preference for a lower standard was contingent on a judgment as to the weight to be placed on the epidemiological evidence. Further, as noted above and summarized in section II.C.2, CASAC has provided a range of advice regarding interpretation of the CO epidemiological studies in light of the associated uncertainties. Accordingly, in consideration of the current evidence with regard to conclusions to be drawn as to the adequacy of the current standards, the Administrator gives consideration to the full breadth of CASAC's advice.

In considering the evidence and quantitative exposure and dose estimates available in this review with regard to the adequacy of public health protection provided by the current primary standards, the Administrator recognizes that, as noted in section II.B. above, the final decision on such judgments is largely a public health policy judgment, which draws upon scientific information and analyses about health effects and risks, as well as judgments about how to consider the range and magnitude of uncertainties that are inherent in the information and analyses. These judgments are informed by the recognition that the available health effects evidence generally reflects a continuum, consisting of ambient levels at which scientists generally agree that health effects are likely to occur, through lower levels at which the likelihood and magnitude of the response become increasingly uncertain. Accordingly, the final decision requires judgment based on an interpretation of the evidence and other information that neither overstates nor understates the strength and limitations of the evidence and information nor the appropriate inferences to be drawn. As described in section I.A above, the Act does not require that primary standards be set at a zero-risk level; the NAAQS must be sufficient but not more stringent than necessary to protect public health, including the health of sensitive groups, with an adequate margin of safety.

In considering the judgments to be made regarding adequacy of the level of protection provided by the current standards, the Administrator takes particular note of the findings of the exposure and dose assessment in light of considerations discussed above regarding the weight given to different COHb levels and their frequency of occurrence. As described in the proposal, the exposure and dose assessment results indicate that only a very small percentage of the at-risk population is estimated to experience a single occurrence in a year of daily maximum COHb at or above 3.0% COHb under conditions just meeting the current 8-hour standard in the two study areas evaluated, and no multiple occurrences are estimated. The Administrator also notes the results indicating that only a small percentage of the at-risk populations are estimated to experience a single occurrence of 2% COHb in a year under conditions just meeting the standard, and still fewer are estimated to experience multiple such occurrences. Additionally, consistent with findings of the assessment performed for the review completed in 1994, less than 0.1% of person-days for the at-risk populations were estimated to include occurrences of COHb at or above 2% COHb. Taken together, the Administrator judges the current standard to provide a very high degree of protection for the COHb levels and associated health effects of concern, as indicated by the extremely low estimates of occurrences, and to provide slightly less but a still high degree of protection for the effects associated with lower COHb levels, the physiological significance of which is less clear.

In further considering the adequacy of the margin of safety provided by the current standards, the Administrator has additionally considered conclusions drawn in the Integrated Science Assessment and Policy Assessment with regard to interpretation of the limited and less certain information concerning a relationship between exposure to relevant levels of ambient CO and health effects in other, potentially, susceptible groups, and with regard to the uncertainties concerning quantitative interpretation of the available epidemiological studies. In so doing, the Administrator additionally judges the current standards to provide adequate protection against the risk of other health effects for which the evidence is less certain. Further, the Administrator concludes that consideration of the epidemiological studies does not lead her to identify a need for any greater protection. For these and all of the reasons discussed above, and recognizing the CASAC conclusion that, overall, the current evidence and REA results provide support for retaining the current standards, the Administrator concludes that the current suite of primary CO standards is requisite to protect public health with an adequate margin of safety from effects of ambient CO.

III. Consideration of a Secondary Standard

As noted in section I.A. above, section 109(b) of the Clean Air Act requires the Administrator to establish secondary standards that, in the judgment of the Administrator, are requisite to protect the public welfare from any known or anticipated adverse effects associated with the presence of the pollutant in the ambient air. In so doing, the Administrator seeks to establish standards that are neither more nor less stringent than necessary for this purpose. The Act does not require that secondary standards be set to eliminate all risk of adverse welfare effects, but rather at a level requisite to protect public welfare from those effects that are judged by the Administrator to be adverse.

This section presents the rationale for the Administrator's final decision not to set a secondary NAAQS for CO. In considering the current air quality criteria, evidence of CO-related welfare effects at or near ambient levels that are unrelated to climate has not been identified. Accordingly, in considering whether a secondary standard is requisite to protect the public welfare, the Administrator has primarily considered conclusions based on the evidence of a role for CO in effects on climate. Evaluation of this evidence in the Integrated Science Assessment and staff considerations in the Policy Assessment highlighted the limitations in this evidence and provided information indicating that this role for atmospheric CO is predominantly indirect, through its role in chemical reactions in the atmosphere which result in increased concentrations of pollutants with direct contributions to the greenhouse effect or that deplete stratospheric ozone. Given the evaluation of the evidence, as well as the views of CASAC, the Administrator concludes that no secondary standard should be set at this time because, as in the past reviews, having no standard is requisite to protect public welfare from any known or anticipated adverse effects from ambient CO exposures.

In this section, we first summarize the evidence currently available for welfare

effects to inform decisions in this review in section III.A. Next, the rationale for the proposed conclusions is summarized in section III.B. Public comments and CASAC advice regarding consideration of a secondary standard in this review are summarized in section III.C. Lastly, the Administrator's final conclusions with regard to a secondary standard for CO are presented in section III.D.

A. Introduction

In evaluating whether establishment of a secondary standard for CO is appropriate at this time, we adopted an approach in this review that builds upon the general approach used in the last review and reflects the broader body of evidence and information now available. Consideration of the evidence available in this review focuses on the following overarching question: Does the currently available scientific information provide support for considering the establishment of a secondary standard for CO?

In considering this overarching question, the Policy Assessment first noted that the extensive literature search performed for the current review did not identify any evidence of public welfare effects of CO unrelated to climate at or near ambient levels (ISA, section 1.3 and p. 1–3). However, ambient CO has been associated with welfare effects related to climate (ISA, section 3.3). Climate-related effects of CO were considered for the first time in the 2000 AQCD and are given somewhat greater focus in the current ISA relative to the 2000 AQCD in reflection of comments from CASAC and increased attention to the role of CO in climate forcing (Brain and Samet, 2009; ISA, section 3.3). Based on the current evidence, the ISA concludes that ''a causal relationship exists between current atmospheric concentrations of CO and effects on climate'' (ISA, section 2.2). Accordingly, the discussion in the Policy Assessment (summarized in the proposal) focuses on climate-related effects of CO in addressing the question posed above.

The currently available information summarized in the ISA (ISA section, 3.3) does not alter the current well-established understanding of the role of urban and regional CO in continental and global-scale chemistry, as outlined in the 2000 AQCD (PA, section 3.2). CO absorbs outgoing thermal infrared radiation very weakly; thus, the direct contribution of CO itself to climate forcing (or greenhouse warming) is very small (ISA, p. 3–11). Rather, the most significant effects on climate are indirect, resulting from CO's role as the major atmospheric sink for hydroxyl radicals. Through this role of CO in global atmospheric chemistry, CO influences the abundance of chemically reactive, major greenhouse gases, such as methane and ozone, that contribute directly to the greenhouse effect and of other gases that exert their effect on climate through depletion of stratospheric ozone (ISA, section 3.3 and p. 3–11). There is significant uncertainty concerning this effect, and it appears to be highly variable, with the ISA recognizing that climate effects of changes to emissions of a short-lived pollutant such as CO are very likely dependent on localized conditions (ISA section 3.3, pp. 3–12, 3–15, 3–16). As noted in the ISA, however, ''the indirect [global warming potential] values evaluated and summarized by [the Intergovernmental Panel on Climate Change] are global and cannot reflect effects of localized emissions or emissions changes'' (ISA at p. 3–16). Accordingly, the Policy Assessment stated that, as a result of the spatial and temporal variation in emissions and concentrations of CO and the localized chemical interdependencies that cause the indirect climate effects of CO, it is highly problematic to evaluate the indirect effects of CO on climate (PA, p. 3–3).

Based upon the information and considerations summarized above, the Policy Assessment concluded as an initial matter that, with respect to non-climate welfare effects, including ecological effects and impacts to vegetation, there is no currently available scientific information that supports a CO secondary standard (PA, section 3.4). Secondly, with respect to climate-related effects, the Policy Assessment recognized the evidence of climate forcing effects associated with CO, most predominantly through its participation in chemical reactions in the atmosphere which contribute to increased concentrations of other more direct acting climate-forcing pollutants (ISA, sections 2.2 and 3.3). The PA also noted, however, that the available information provides no basis for estimating how localized changes in the temporal and spatial patterns of ambient CO likely to occur across the U.S. with (or without) a secondary standard would affect local, regional, or nationwide changes in climate. Moreover, more than half of the indirect forcing effect of CO is attributable to ozone (O_3) formation, and welfare-related effects of O_3 are more appropriately considered in the context of the review of the O_3 NAAQS, rather than in this CO NAAQS review (PA, section 3.4). For these reasons, the Policy Assessment concluded that there is insufficient information at this time to support the consideration of a secondary standard based on CO effects on climate processes (PA, section 3.4).

B. Rationale for Proposed Decision

In considering a secondary standard for CO, the proposed conclusions presented in the proposal were based on the assessment and integrative synthesis of the scientific evidence presented in the ISA, building on the evidence described in the 2000 AQCD, as well as staff consideration of this evidence in the Policy Assessment and CASAC advice. As an initial matter, the proposal concluded that the currently available scientific information with respect to non-climate welfare effects, including ecological effects and impacts to vegetation, does not support a CO secondary standard. Secondly, with respect to climate-related effects, the proposal took note of staff considerations in the Policy Assessment and concurred with staff conclusions that information is insufficient at this time to provide support for a CO secondary standard. Thus, based on consideration of the evidence, staff considerations in the Policy Assessment, as well as the views of CASAC, the Administrator proposed to conclude that no secondary standards should be set at this time because, as in the past reviews, having no standard is requisite to protect public welfare from any known or anticipated adverse effects from ambient CO exposures.

C. Comments on Consideration of Secondary Standard

In considering the need for a secondary standard, the Administrator first notes the advice and recommendations from CASAC based on their review of two drafts of the Integrated Science Assessment and of the draft Policy Assessment. With regard to consideration of a secondary standard for CO, CASAC noted without objection or disagreement the staff's conclusions that there is insufficient information to support consideration of a secondary standard at this time (Brain and Samet, 2010c). One public comment generally concerning EPA's proposed decision on a secondary standard is addressed below. Other more specific public comments related to consideration of a secondary standard are addressed in the Response to Comments document.

One comment (joint submission from Center for Biological Diversity and others) stated that due to the global influence of CO on climate, EPA must

establish a secondary NAAQS. The comment provided no information as to what form, level, or other elements of a secondary standard would be appropriate in light of the substantial uncertainties and regional variation in the indirect effects of CO. Rather, the comment asserted that there is ''a substantial body of knowledge, as reviewed in the ISA, regarding CO and climate'' and that ''uncertainty does not absolve the EPA of the obligation to protect public welfare'' (Center for Biological Diversity comments at p. 9).

As noted by the commenter, the ISA reviewed the body of knowledge regarding CO and climate. As discussed above, the ISA concluded that CO has climate-related effects, that the direct effects of CO are weak, that there are significant uncertainties concerning the indirect climate effects of CO, and that these effects appear to be highly variable and dependent on localized conditions. Further, as noted in the Policy Assessment, the spatial and temporal variation in emissions and concentrations of CO and the localized chemical interdependencies that cause the indirect climate effects of CO make it highly problematic to evaluate the indirect effects of CO on climate. In light of the fact that the climate effects of CO are not only uncertain but highly variable and dependent on local conditions (*e.g.,* concentrations of other pollutants), EPA believes that there is not adequate information available to conclude that a secondary standard in the United States is requisite to protect public welfare. The comment points to the estimated global effects of CO on climate, but nowhere does the comment provide evidence that EPA's conclusion regarding adequacy of the available information is in error.

EPA fully appreciates that the NAAQS are often established on the frontiers of scientific knowledge, and EPA continually assesses scientific uncertainties in judging what NAAQS are requisite to protect public health and welfare. EPA is not asserting that the fact that there are some uncertainties prevents EPA from setting a standard. Rather, EPA has judged that, in light of both the significant uncertainties and the evidence of the direct effects being weak and the indirect effects being highly variable and dependent on local conditions, particularly in light of CO's short lifetime, it is not possible to anticipate how any secondary standard that would limit ambient CO concentrations in the United States would in turn affect climate and thus any associated welfare effects. As additionally discussed in section III.D below, EPA has reviewed the available information and judged the absence of a standard as being requisite to protect public welfare.

D. Conclusions Concerning a Secondary Standard

The conclusions presented here are based on the assessment and integrative synthesis of the scientific evidence presented in the ISA, building on the evidence described in the 2000 AQCD, as well as staff consideration of this evidence in the Policy Assessment and CASAC advice, and with consideration of the views of public commenters on the need for a secondary standard.

In considering whether the currently available scientific information supports setting a secondary standard for CO, EPA takes note of the ISA and Policy Assessment consideration of the body of available evidence (briefly summarized above in section III.A). First, EPA concludes that the currently available scientific information with respect to non-climate welfare effects, including ecological effects and impacts to vegetation, does not support the need for a CO secondary standard. Secondly, with respect to climate-related effects, the EPA takes note of the ISA's conclusions that there are significant uncertainties concerning the indirect climate effects of CO, and that these effects appear to be highly variable and dependent on localized conditions as well as staff considerations in the Policy Assessment and concurs with staff conclusions that information is insufficient at this time to support the need for a CO secondary standard. More specifically, as more fully discussed in consideration of public comments in section III.C above, EPA has judged that, in light of both the significant uncertainties and the evidence of the direct effects of CO on climate being weak and the indirect effects being highly variable and dependent on local conditions, particularly in light of CO's short lifetime, it is not possible to anticipate how any secondary standard that would limit ambient CO concentrations in the United States would affect climate. Consequently, information that might indicate the need for additional protection from CO environmental effects and on which basis EPA might identify a secondary standard for the purposes of protecting against CO effects on climate processes is not available.

Thus, in considering the evidence, staff considerations in the Policy Assessment summarized here, as well as the views of CASAC and the public, summarized above, the Administrator concludes that no secondary standards should be set at this time because, as in the past reviews, having no standard is requisite to protect public welfare from any known or anticipated adverse effects from ambient CO exposures.

IV. Amendments to Ambient Monitoring Requirements

The EPA is finalizing changes to ambient air CO monitoring methods and the ambient monitoring network design requirements to support the NAAQS for CO discussed above in Section II. Because ambient CO monitoring data are essential to the implementation of the NAAQS for CO, EPA is finalizing minimum monitoring requirements for the ambient CO monitoring network. State, local, and Tribal monitoring agencies (''monitoring agencies'') collect ambient CO monitoring data in accordance with the monitoring requirements contained in 40 CFR parts 50, 53, and 58.

A. Monitoring Methods

This section provides background and rationale for the amendments that EPA proposed to the Federal Reference Method (FRM) for CO and to the associated performance specifications for automated CO analyzers. It also discusses the public comments on those proposed amendments and the few minor changes made to them as they are being promulgated today.

The use of FRMs for the collection of air monitoring data provides uniform, reproducible measurements of pollutant concentrations in ambient air. Federal equivalent methods (FEMs) allow for the introduction of new or alternative technologies for the same purpose, provided these methods produce measurements directly comparable to the reference methods. EPA has established procedures for determining and designating FRMs and FEMs at 40 CFR part 53.

For ambient air monitoring data for CO to be used for determining compliance with the CO NAAQS, such data must be obtained using either an FRM or an FEM, as defined in 40 CFR parts 50 and 53. All CO monitoring methods in use currently by state and local monitoring agencies are EPA-designated FRM analyzers. No FEM analyzer, *i.e.* one using an alternative measurement principle, has yet been designated by EPA for CO. These continuous FRM analyzers have been used in monitoring networks for many years and provide CO monitoring data adequate for determining CO NAAQS compliance. The current list of all approved FRMs capable of providing ambient CO data for this purpose may be found on the EPA Web site, *http://www.epa.gov/ttn/amtic/files/ambient/*

criteria/reference-equivalent-methods-list.pdf. Although both the existing CO FRM in 40 CFR part 50 and the FRM and FEM designation requirements in part 53 remain adequate to support the CO NAAQS, EPA nevertheless proposed editorial revisions to the CO FRM and both technical and editorial revisions to part 53, as discussed below.

1. Proposed Changes to Parts 50 and 53

Reference methods for criteria pollutants are described in several appendices to 40 CFR part 50; the CO FRM is set forth in appendix C. A non-dispersive infrared photometry (NDIR) measurement principle is formally prescribed as the basis for the CO FRM. Appendix C describes the technical nature of the NDIR measurement principle stipulated for CO FRM analyzers as well as two acceptable calibration procedures for CO FRM analyzers. It further requires that an FRM analyzer must meet specific performance, performance testing, and other requirements set forth in 40 CFR part 53.

The CO FRM was first promulgated on April 30, 1971 (36 FR 8186), in conjunction with EPA's establishment (originally as 42 CFR part 410) of the first NAAQS for six pollutants (including CO) as now set forth in 40 CFR part 50. The method was amended in 1982 and 1983 (47 FR 54922; 48 FR 17355) to incorporate minor updates, but no substantive changes in the fundamental NDIR measurement technique have been made since its original promulgation.

In connection with the current review of the NAAQS for CO, EPA reviewed the existing CO FRM to determine if it was still adequate or if improved or more suitable measurement technology has become available to better meet current FRM needs as well as potential future FRM requirements. EPA determined that no new ambient CO measurement technique has become available that is superior to the NDIR technique specified for the current FRM, and that the existing FRM continues to be well suited for both FRM purposes and for use in routine CO monitoring. No substantive changes were needed to the basic NDIR FRM measurement principle. Several high quality FRM analyzer models have been available for many years and continue to be offered and supported by multiple analyzer manufacturers.

However, EPA found that the existing CO FRM should be improved and updated to clarify the language of some provisions, to make the format match more closely the format of more recently promulgated automated FRMs, and to better reflect the design and improved performance of current, commercially available CO FRM analyzers. Accordingly, EPA proposed appropriate, albeit minor, changes to the FRM. Because these mostly editorial changes were quite numerous, the entire text of the CO FRM was revised and re-proposed.

In close association with the proposed editorial revision to the CO FRM described above, EPA also proposed to update the performance requirements for CO FRM analyzers that are contained in 40 CFR part 53. These requirements were established in the 1970's, based primarily on the NDIR CO measurement technology available at that time. While the fundamental NDIR measurement principle, as implemented in commercial FRM analyzers, has changed little over several decades, FRM analyzer performance has improved markedly. Contemporary advances in digital electronics, sensor technology, and manufacturing capabilities have permitted today's NDIR analyzers to exhibit substantially improved measurement performance, reliability, and operational convenience at modest cost. This improved instrument performance was not reflected in the previous performance requirements for CO FRM analyzers specified in 40 CFR part 53, indicating a need for an update to reflect that improved performance.

The updated performance requirements that EPA proposed for CO analyzers make them more consistent with the typical performance capability available in contemporary FRM analyzers and will ensure that newly designated FRM analyzers will have this improved measurement performance. A review of analyzer manufacturers' specifications has determined that all existing CO analyzer models currently in use in the monitoring network already meet the proposed new requirements (for the standard measurement range). Also in conjunction with this modernization of the analyzer performance requirements, EPA proposed new, more stringent performance requirements applicable, on an optional basis, to analyzers that feature one or more lower, more sensitive measurement ranges. Such lower ranges will support improved monitoring data quality in areas of low CO concentrations.

These updated and new performance requirements are being promulgated as amendments to subpart B of 40 CFR part 53, which prescribes the explicit procedures to be used for testing specified performance aspects of candidate FRM and FEM analyzers, along with the minimum performance requirements that such analyzers must meet to qualify for FRM or FEM designation. In particular, the new performance requirements appear in table B–1 of subpart B of 40 CFR part 53. Although table B–1 covers candidate methods for sulfur dioxide (SO_2), O_3, CO, and NO_2, the updates to table B–1 that EPA is promulgating today affect only candidate methods for CO.

The updated performance requirements apply to candidate CO analyzers that operate on the specified ''standard'' measurement range (0 to 50 ppm). This measurement range remains unchanged from the existing requirements as it appropriately addresses the monitoring data needed for assessing attainment. The measurement noise limit is reduced from 0.5 to 0.2 ppm, and the lower detectable limit is reduced from 1 to 0.4 ppm. Limits for zero drift and span drift are lowered, respectively, from 1.0 to 0.5 ppm, and from 2.5% to 2.0%. The previously existing mid-span drift limit requirement, tested at 20% of the upper range limit (URL), is withdrawn, as EPA has found that the mid-span drift requirement was unnecessary for CO instruments because the upper level span drift (tested at 80% of the URL) completely and more accurately measures analyzer span drift performance.

The lag time limit is reduced from 10 to 2 minutes, and the rise and fall time limits are lowered from 5 to 2 minutes. For precision, EPA is changing the form of the precision limit specifications from an absolute measure (ppm) to percent (of the URL) for CO analyzers and setting the precision limit at 1 percent tested at both 20% and 80% of the URL. One percent is equivalent to the previous limit value of 0.5 ppm for precision for the standard (0 to 50 ppm) measurement range. This change in units from ppm to percent makes the requirement responsive to higher and lower measurement ranges (*i.e.,* more demanding for lower ranges).

The interference equivalent limit of 1 ppm for each interferent is not changed, but EPA is withdrawing the previously existing limit requirement for the total of all interferents. EPA has found that the total interferent limit is unnecessary because modern CO analyzers are subject to only a few interferences, and they tend to be well controlled.

The new performance requirements apply only to newly designated CO FRM or FEM analyzers; however, essentially all existing FRM analyzers in use today, as noted previously, already meet these requirements, so existing FRM analyzers are not required to be re-tested and re-

designated under the new requirements. All currently designated FRM analyzers retain their original FRM designations.

EPA also recognized that some CO monitoring objectives (*e.g.,* area-wide monitoring away from major roads and rural area surveillance) require analyzers with lower, more sensitive measurement ranges than the standard range used for typical ambient monitoring. To improve data quality for such lower-range measurements, EPA is adding a separate set of performance requirements that apply specifically to lower ranges (*i.e.,* those having a URL of less than 50 ppm) for CO analyzers. These additional, lower-range requirements are listed in the revised table B–1. A candidate analyzer that meets the table B–1 requirements for the standard measurement range (0 to 50 ppm) can optionally have one or more lower ranges included in its FRM or FEM designation by further testing to show that it also meets these supplemental, lower-range requirements.

Although no substantive changes were determined to be needed to the test procedures and associated provisions of subpart B for CO, the detailed language in many of the subpart B sections was in need of significant updates, clarifications, refinement, and (in a few cases) correction of minor typographical errors. These changes to the subpart B text (apart from the changes proposed for table B–1 discussed above) are very minor and almost entirely editorial in nature, but quite numerous. Therefore, EPA has revised and is re-promulgating the entire text of subpart B text.

As discussed previously, table B–1, which sets forth the pollutant-specific performance limits, is being amended only as applicable to CO analyzers. EPA amended table B–1 as applicable to SO_2 methods on June 22, 2010 and intends to amend table B–1 for O_3 and NO_2 later, if appropriate, when the associated NAAQS are reviewed.

2. Public Comments

EPA notes first that CASAC stated that ''more sensitive and precise monitors need to be deployed to measure levels that are less than or equal to 1 ppm.'' (Brain and Samet 2010b). Comments from the public on the proposed revisions to CO monitoring methods are addressed in this section or in the Response to Comments document. Comments on the proposed changes to the CO monitoring methodology were received from only one member of the public, the American Petroleum Institute. The commenter was generally supportive of EPA's efforts to clarify and update the regulations for the CO FRM and the CO analyzer performance requirements. In regard to the CO FRM (40 CFR part 50, appendix C), the commenter questioned EPA's proposed relaxation in a flow rate control requirement in the dilution-method calibration procedure, from 1% to 2%. However, EPA believes that the original 1% requirement is unnecessarily stringent, and that this change is appropriate and commensurate with the existing 2% flow rate measurement accuracy and with the overall calibration accuracy needed to obtain adequate data quality with the method.

To further improve clarity of the FRM calibration section, the commenter also suggested a minor change to Equation 1 and the addition of language indicating that the measurement display or read-out device connected to the analyzer to monitor its reading during calibration should be the actual, or at least closely representative of the actual, data recording system used during field operation of the analyzer. EPA has accepted both of these suggestions, and appropriate changes have been incorporated into the changes being made to the CO FRM in this action.

Another comment questioned the proposed withdrawal of the previous total interference limit requirement. In response to this comment, EPA re-evaluated the efficacy of this limit for CO analyzers and again determined that the limit was not necessary, because the number of individual interferences to which FRM (and most potential FEM) CO analyzers are subject is small (only 2 for FRMs), as listed in table B–3 of 40 CFR part 53. Also, response to these interferents is typically well controlled in modern CO analyzers. In addition, the new, individual interference limit for the lower measurement ranges is one half the limit for the standard range, which further mitigates any need for a separate, total interference limit.

The commenter questioned EPA's proposed withdrawal of the previously existing limit requirement for span drift measured at 20% of the upper range limit (URL), contending that this limit was important because it is closer in concentration to the existing NAAQS than the span drift measured at 80% of the URL. However, the purpose of the span drift limit is not to directly assess measurement error at a particular, mid-scale concentration level. That purpose is served by the 1-point quality control check for CO monitors described in section 3.2.1 of appendix A of 40 CFR part 58. Rather, for the purpose of analyzer performance testing, the linear input/output functional characteristic of the analyzer is best described by its zero point and its slope, because these parameters are generally subject to change (drift) independently. Thus, zero drift (change in the zero point) and span drift (change in the slope) are tested separately. Zero drift is, of course, measured at zero concentration, and span drift is most accurately measured at a concentration near the URL. The span drift test at 80% URL (when the zero drift is within the specified requirement) more accurately determines any change in the slope parameter then a test at 20% URL. The previously specified test at 20% URL thus serves little, if any, purpose in regard to determining change in the slope. Therefore, EPA has concluded that this requirement can be withdrawn.

Finally, the commenter was concerned that existing FRM analyzers approved under the previously existing performance requirements may provide data quality inferior to that of analyzers approved under the proposed new requirements and that older analyzers may be unacceptable for some applications that demanded higher performance or higher data quality. A ''tiered'' approach was suggested to handle this situation.

In proposing more stringent performance requirements for approval of new FRM and FEM analyzers, EPA noted that the performance of analyzers approved under the existing performance requirements was fully adequate for most routine compliance monitoring applications, and that the proposed new requirements were largely to bring the base FRM and FEM performance requirements up to date and more commensurate with the performance of modern commercially available CO analyzers. EPA further noted that all currently designated FRM analyzers already meet the proposed new requirements. This means that the quality of routine CO monitoring data currently being obtained is already of the higher level portended by the proposed new performance requirements.

In the proposal, however, EPA did recognize that some special CO monitoring applications do require a higher level of performance than that required for routine applications. Therefore, EPA is promulgating optional, more stringent performance requirements for analyzers having a more sensitive, ''lower range'' available for such applications. This is, in fact, a ''tiered'' approach. Applicants would be able to elect to have such lower ranges approved as part of their FRM or FEM designation. These new, special performance requirements will alert monitoring agencies that they should

consider low-range performance of an analyzer for those applications that may require better low-level performance, and they can select an analyzer that has such a lower range approved under its FRM (or FEM) designation.

3. Decisions on Methods

As discussed above, a few relatively minor changes have been incorporated into the proposed revised CO FRM in appendix C of part 50, in response to public comments received by EPA. With these changes, the revised appendix C is being promulgated as otherwise proposed. Only one change has been made to the revision proposed for subpart B of part 53, to fix a typographical error that appeared in proposed table B–1 concerning reversed entries for the span drift limits for the 20% and 80% URL for the CO ''lower range'' column. Aside from this correction, the revised subpart B is being promulgated exactly as proposed.

B. Network Design

This section on CO network design provides information on the proposed network design, the public comments received on the proposed network design, and the EPA's conclusions, including rationale and details, on the final changes to the CO network design requirements.

1. Proposed Changes

The objective of an ambient monitoring network is to (1) provide air pollution data to the general public in a timely manner, (2) support compliance with ambient air quality standards and emissions strategy development, and (3) provide support for air pollution research (40 CFR part 58, appendix D). The proposed CO network design was intended to directly support the NAAQS by requiring monitoring that provides data for use in the designation process and ongoing assessment of air quality. In particular, the proposed network design was intended to require a sufficient number of monitors to collect data for compliance purposes in the near-road environment, where, as noted in section II.A.1 above, the highest ambient CO concentrations generally occur, particularly in urban areas (ISA, section 3.5.1.3; REA, section 3.1.3).

The EPA proposed CO monitors to be required within a subset of near-road NO_2 monitoring stations, which are required in 40 CFR part 58, appendix D, section 4.3. Per the preamble to the final rule for the NO_2 NAAQS promulgated on February 9th, 2010 (75 FR 6474), near-road NO_2 monitoring stations are intended to be placed in the near-road environment at locations of expected maximum 1-hour NO_2 concentrations and are triggered for metropolitan areas based on Core Based Statistical Area (CBSA) population thresholds and a traffic-related threshold based on annual average daily traffic (AADT).[29] The EPA proposed that CO monitors be required to operate in any CBSA having a population of 1 million or more persons, collocated with required near-road NO_2 monitoring stations. Based upon 2009 Census Bureau estimates and 2008 traffic statistics maintained by the US Department of Transportation (US DOT) Federal Highways Administration (FHWA), the CO monitoring proposal was estimated to require approximately 77 CO monitors to be collocated with near-road NO_2 monitors within 53 CBSAs.[30]

The EPA proposed that any required near-road CO monitors shall be reflected in State annual monitoring network plans due in July 2012. Further, the Agency proposed that required near-road CO monitors be operational by January 1, 2013. Due to the proposed collocation of required CO monitors with required near-road NO_2 monitors, these implementation dates were proposed in order to match those of the forthcoming near-road NO_2 monitoring network.

In light of the proposal to require near-road CO monitors be collocated with required near-road NO_2 monitors, the EPA proposed that siting criteria for microscale CO monitors be revised to match those of microscale near-road NO_2 monitors (and also microscale $PM_{2.5}$ monitors). In particular, the EPA proposed that microscale CO siting criteria for probe height and horizontal spacing be changed to match those of near-road NO_2 monitors as prescribed in 40 CFR part 58 appendix E, sections 2, 4(d), 6.4(a), and table E–4. Specifically, EPA proposed the following: (1) To allow microscale CO monitor inlet probes to be between 2 and 7 meters above the ground; (2) that microscale near-road CO monitor inlet probes be placed so they have an unobstructed air flow, where no obstacles exist at or above the height of the monitor probe, between the monitor probe and the outside nearest edge of the traffic lanes of the target road segment; and (3) that required near-road CO monitor inlet probes shall be as near as practicable to the outside nearest edge of the traffic lanes of the target road segment, but shall not be located at a distance greater than 50 meters in the horizontal from the outside nearest edge of the traffic lanes of the target road segment.

Finally, the EPA recognized that a single monitoring network design may not always be sufficient for fulfilling specific or otherwise unique data needs or monitoring objectives for every area across the nation. As such, the EPA proposed to provide the Regional Administrators with the discretion to require monitoring above the minimum requirements as necessary to address situations where minimum monitoring requirements are not sufficient to meet monitoring objectives.

2. Public Comments

EPA first notes that CASAC expressed concern over the current monitoring network, stating ''[m]ore extensive coverage may be warranted for areas where concentrations may be more elevated, such as near roadway locations. The Panel found that in some instances current networks underestimated carbon monoxide levels near roadways.'' (Brain and Samet 2010b). General comments from the public based on relevant factors that either support or oppose the proposed changes to the CO network design are addressed in this section. Specific public comments related to the network design, but with regard to material which was not specifically proposed by the EPA or posed for solicitation of comment, are addressed in the Response to Comments document.

a. Near-Road Monitoring and Collocation With Near-Road Nitrogen Dioxide Monitors

The EPA received multiple public comments on the overall merit of monitoring for CO in the near-road environment, the proposal that required CO monitors be collocated with required near-road NO_2 monitors, and the number of required CO monitors that might be appropriate. In general, public health and environmental groups (*e.g.,* American Lung Association [ALA], American Thoracic Society [ATS], Environmental Defense Fund [EDF]), some states or state environmental agencies or organizations (*e.g.* National Association of Clean Air Agencies [NACAA], Northeast States for Coordinated Air Use Management [NESCAUM], New York State Department of Environment Conservation [NYSDEC], and State of Wisconsin Department of Natural

[29] One near-road NO_2 monitor is required in any CBSA having a population of 500,000 or more persons. Two near-road NO_2 monitors are required in any CBSA having a population of 2.5 million or more persons, or in any CBSA that has one or more road segments with an AADT count of 250,000 or more (40 CFR part 58, appendix D, section 4.3).

[30] Since the proposal, EPA has estimated that using 2010 Census Bureau counts the proposed rule would have resulted in approximately 75 monitors in 52 CBSAs being required.

Resources [WIDNR]), and some private citizen commenters provided support for a requirement for CO monitors in the near-road environment. For example, ALA, ATS, and EDF state that they ''* * * are pleased to see EPA take seriously the public health threats that are posed to millions of residents and other sensitive receptors who live near or work on or near highways as well as other high exposure areas.'' They go on to note that ''[near-road ambient monitoring] data have been sorely lacking from the national monitoring network and are long overdue.'' Further, many of the commenters who were supportive of near-road monitoring were supportive of collocating CO monitors with near-road NO_2 monitors as it establishes multipollutant monitoring within the ambient air monitoring network. For example, NACAA stated the following in their comments: ''* * * NACAA supports EPA's proposal to collocate CO near roadway monitors at a subset of NO_2 near-roadway sites. This is consistent with the recommendations of EPA's Clean Air Scientific Advisory Committee (CASAC), which urged the agency to develop the near roadway monitoring network with a multipollutant focus and included CO in its list of pollutants that should be measured.''

Some industry commenters (*e.g.,* Association of Automobile Manufacturers [AAM] and American Electric Power Service Corporation [AEPSC]) and a number of other states or state groups (*e.g.,* Indiana Department of Environmental Management [IDEM], North Carolina Department of Air Quality [NCDAQ], New Mexico Air Quality Bureau [NMAQB], South Carolina Department of Health and Environmental Control [SCDHEC], Southeast Michigan Council of Governments [SEMCOG], and Texas Commission on Environmental Quality [TCEQ]) generally did not support the proposed near-road CO monitoring requirements. For example, IDEM stated that ''CO measured by roadside monitors is not representative of ambient air quality everywhere in a city or county containing the roadway'' and that ''* * * roadside monitoring measurements represent source-specific data. Therefore, Indiana does not believe that roadside monitoring should apply to an ambient air quality standard.'' SCDHEC stated it ''* * * does not believe that the use of a near-road monitoring network in a state-wide ambient air monitoring network is the appropriate choice to protect our community's public health'' and that ''this monitoring method biases the monitoring effort into areas of little or no population while monitoring for the community population exposure is neglected.'' Similarly, industry commenter AAM stated that ''the current proposal does not include a requirement that the near-roadway monitors be sited in locations where there is actual human exposure to the ambient air for time periods corresponding to the 1-hour or 8-hour CO NAAQS.''

The EPA stated in the CO proposal (76 FR 8158) that the proposed near-road CO monitoring requirements were intended to ensure a network of adequate size and focus to provide data for comparison to the NAAQS, support health studies and model verification, and to fulfill Agency multipollutant monitoring objectives. In response to the comment that near-road monitoring data would be ''source-specific'' and may not be appropriately applicable to an ambient air standard, the Agency notes that monitoring for CO in the near-road environment (as a mobile source oriented measurement) is a longstanding agency practice, as evidenced by the first monitoring rule promulgated in 1979 (44 FR 27558, May 10, 1979). That 1979 monitoring rule included the requirement to monitor for ''peak'' CO concentrations in urban areas having populations of 500,000 people or more in locations ''* * * around major traffic arteries and near heavily traveled streets in downtown areas.'' The Agency believes that the use of near-road CO monitors as proposed is not a departure from the Agency's longstanding intent to measure peak concentrations of CO in the near-road environment. Rather, the proposal was consistent with the Agency's approach to require monitors for CO, and other criteria pollutants, in locations that likely experience peak ambient concentrations. The Agency also notes that source-oriented monitoring is and has long been a common practice in ambient monitoring networks, although more often associated with stationary sources, where the ambient data collected are used for comparison to the NAAQS. Data on ambient air concentrations, including near-road data, which may be most appropriately classified as on-road mobile source oriented, are appropriate to compare to the NAAQS.

With regard to the comments asserting that near-road monitoring would result in monitoring areas of ''little or no population'' and thus population exposure is not represented, the EPA notes that on-road mobile sources are ubiquitous in urban areas and are a dominant component of the national CO emissions inventory, at nearly 60% of the total inventory, based on the 2008 NEI. As such, microenvironments influenced by on-road mobile sources are important contributors to ambient CO exposures, particularly in urban areas (REA, section 2.7). Further, the ambient CO exposures of most concern are short-term. Accordingly, near-road monitoring is focused on characterizing peak or elevated ambient concentrations. The relevance of this focus for the purposes of both ensuring compliance with the NAAQS and gathering data to inform our consideration of ambient CO exposures is demonstrated by the ubiquity of on-road mobile sources throughout urban areas, the time spent by people on or near roadways and the large number of American citizens living in urban areas and near roadways. As was noted in the ISA, the 2007 American Housing Survey (*http://www.census.gov/hhes/www/housing/ahs/ahs07/ahs07.html*) estimates that 17.9 million housing units are within 300 feet (~91 meters) of a 4-lane highway, airport, or railroad. Using the same survey, and considering that the average number of residential occupants in a housing unit is approximately 2.25, an estimate can be made that at least 40 million American citizens live near 4-lane highways, airports, or railroads. Among these three transportation facilities, roads are the most pervasive of the three, suggesting that a significant number of people may live near major roads. Furthermore, the 2008 American Time Use Survey (*http://www.bls.gov/tus/*) reported that the average U.S. civilian spent over 70 minutes traveling per day. Based on these considerations, the Agency has concluded that monitoring in the near-road environment would characterize the ambient concentrations that contribute to ambient CO exposure for a significant portion of the population that would otherwise not be captured.

The AAM also commented that the EPA ''* * * proposal to locate more near roadway monitors appears to be an attempt to find problems where none are likely to exist.'' The Agency proposal for near-road monitors is in line with longstanding monitoring objectives to monitor for peak or elevated ambient pollutant concentrations where they may occur. The Agency agrees that CO is no longer as pervasive a problem as it was in the past; however, there is still a responsibility to appropriately characterize and assess ambient concentrations to ensure that they do not exceed the NAAQS. In comments on the first draft of the ISA, CASAC advised that ''* * * relying only on

EPA's [current] fixed monitoring network, CO measurements may underestimate CO exposures for specific vulnerable populations such as individuals residing near heavily trafficked roads and who commute to work on a daily basis.'' In comments on the second draft of the ISA, CASAC commented that ''the panel expresses concern about the existing CO monitoring network, both for its [spatial] coverage and for its utility in estimating human exposure'' and that ''CO exposures may not be adequately characterized for populations that may be exposed to higher CO levels because of where they live and work,'' such as the near-road environment. Finally, in comments on the second draft of the REA, CASAC stated that ''the approach for siting monitors needs greater consideration. More extensive coverage may be warranted for areas where concentrations may be more elevated, such as near-roadway locations.'' In light of these comments and upon a review of the existing CO network, the Administrator concluded that the current CO monitoring network (circa 2010) lacked a necessary focus. While some currently existing sites that were established in the 1970s and 1980s continue to monitor near-road locations in downtown areas or within urban street canyons, and a minimum number of area-wide monitors are currently required at National Core (NCore) multipollutant stations, few monitors exist that characterize the more heavily trafficked roads that are prevalent in the modern roadway network, particularly in our larger urban areas. The Agency's proposal was intended to require a modest but appropriate number of CO monitors to characterize the near-road environment where peak or elevated ambient CO concentrations are expected to occur near heavily trafficked roads, as compared with neighborhood or urban background concentrations. If CO levels turn out to be low in these near-road locations, so much the better for public health, and monitoring networks can be adjusted in the future, as they have over time in response to an increased understanding of where levels of concern to public health are likely to occur.

Although the EPA received a number of comments that were largely supportive for the proposed requirement of collocating CO monitors within the forthcoming near-road NO_2 monitoring stations, several commenters encouraged the Agency to provide flexibility to allow for the separation of the newly required CO monitors from the near-road NO_2 sites, if necessary, to better monitor peak near-road CO concentrations. In their comments supporting the collocation concept, NACAA also stated that their organization ''* * * also encourages EPA to allow flexibility for state and local agencies to use alternative siting of near-roadway CO monitors on a case-by-case basis, where there is a scientific justification for siting the CO monitor in a different location from the NO_2 monitor, to ensure the best possible measurement of near roadway CO concentrations.'' Similarly, NCDAQ recognized that ''* * * light duty vehicles tend to have more impact on CO concentrations than do heavy [duty] vehicles'' and went on to surmise that ''* * * not all near-road NO_2 monitoring stations will be well situated to measure maximum CO concentrations.''

The Agency has expressed its intent to pursue the integration of monitoring networks and programs through the encouragement of multipollutant monitoring wherever possible, as evidenced by actions taken in the 2006 monitoring rule that created the NCore network, the expression of the multipollutant paradigm in the 2008 Ambient Air Monitoring Strategy for State, Local, and Tribal Air Agencies, and within this rulemaking process as part of the rationale in proposing the collocation of required near-road CO monitors with near-road NO_2 monitors. Multipollutant monitoring is viewed as a means to broaden the understanding of air quality conditions and pollutant interactions, furthering the capability to evaluate air quality models, develop emission control strategies, and support research, including health studies. However, the Agency also recognizes that the measurement objectives of individual pollutants may not always correspond in a way that would support multipollutant monitoring as the most appropriate option in a network design. On the issue raised by NACAA and NCDAQ concerning the potential difference in locations of peak CO and NO_2 concentrations in the near-road environment, the EPA recognizes the primary influence to be the different emission characteristics between light duty (LD) and heavy duty (HD) vehicles and vehicle operating conditions, which were discussed in section III.B.2 of the CO proposal. The public comments suggesting the need for flexibility in siting near-road CO monitors derives from the fact that near-road NO_2 sites will be sited at locations where peak NO_2 are expected to occur. Since NO_2 is more heavily influenced by HD vehicles and CO is more heavily influenced by LD vehicles on a per vehicle basis, respectively, there may be cases where the peak CO and NO_2 concentrations could occur along different road segments within the same CBSA. As a general observation, the EPA believes that this situation may have more likelihood of occurring in the relatively larger (by population) CBSAs where a higher number of heavily trafficked roads with a wider variety of fleet mix (*e.g.* HD to LD vehicle ratios) tend to exist versus relatively smaller CBSAs. In recognition of these considerations, the final regulation allows for flexibility in CO monitor placement in the near-road environment when justified, as discussed below in section IV.B.3.

b. Population Thresholds for Requiring Near-Road Carbon Monoxide Monitors

The EPA proposed that required CO monitors be collocated with every required near-road NO_2 monitor in a CBSA with a population of 1 million or more persons. Due to the requirement to locate one CO monitor at each required near-road NO_2 site, the proposal would have required two monitors in each CBSA having 2.5 million or more persons or having one or more road segments with Annual Average Daily Traffic (AADT) counts of 250,000 or more. The proposal would have also required one monitor within those CBSAs having 1 million or more persons (but fewer than 2.5 million persons).[31] Based upon 2009 Census Bureau estimates and US DOT maintained traffic summary data, the proposal was estimated to require 77 monitors within 53 CBSAs. Using recent 2010 Census data, and US DOT maintained traffic summary data, the proposal would have required approximately 75 monitors within 52 CBSAs.

The EPA received a number of comments supporting different population thresholds by which to require near-road CO monitors. Those state agencies or state agency groups who generally supported required CO monitoring in the near-road environment (*e.g.,* NACAA, NESCAUM, NYSDEC, and WIDNR) suggested a population threshold of 2.5 million by which near-road CO monitors should be required. In addition, NCDAQ, who did not support near-road CO monitoring,

[31] One near-road NO_2 monitor is required in any CBSA having a population of 500,000 or more persons. Two near-road NO_2 monitors are required in CBSAs with population of greater than 2.5 million, or in any CBSA with a population of 500,000 or more persons that has one or more roadway segments with annual average daily traffic (AADT) counts of 250,000 or more. (40 CFR part 58, Appendix D, Section 4.3).

suggested that if it is required, it be required only within CBSAs of 2.5 million or more. The use of a population threshold of 2.5 million persons, versus 1 million as proposed, would require approximately 42 near-road CO monitors within 21 CBSAs, based on 2010 Census data. Industry commenter American Petroleum Institute (API) stated that the proposed population threshold of 1 million persons ''* * * appears appropriate, but EPA should not require that both [near-road NO_2] sites in the largest CBSAs host CO monitors.'' API's suggestion would require approximately 52 near-road CO monitors within 52 CBSAs. Finally, the public health and environmental groups ALA, ATS, and EDF suggested the EPA promulgate minimum monitoring requirements ''* * * to encompass cities in smaller metro areas, including cities with populations of 500,000 or more, similar to the requirements for NO_2 roadside monitoring.'' ALA, ATS, and EDF's suggestion would result in the requirement of approximately 126 monitors within 103 CBSAs.

As was noted in the proposal, the Agency believes that with the continuing decline of ambient CO levels, as summarized in the EPA's most recent trends report *Our Nation's Air: Status and Trends Through 2008* (*http://www.epa.gov/airtrends/2010/*), there is less likelihood for high CO concentrations in relatively smaller CBSAs (by population). Accordingly, the Agency proposed the requirement for what it believed would be a sufficient number of CO monitors, which would be collocated with required near-road NO_2 monitors in CBSAs having populations of 1 million or more persons. The Administrator considered alternative population thresholds, including the 2.5 million and 500,000 person thresholds, but concluded that those thresholds would require too few or too many monitors, respectively, in light of existing information on CO emissions data, ambient data, and the lack of data for locations near highly trafficked roads. The rationale for the proposed 1 million person threshold was to require a modest but sufficiently sized network that would effectively assess near-road CO concentrations for comparison to the NAAQS and could also provide data from within a multipollutant framework to support research (which includes health studies), facilitate model verification, and assess and evaluate emissions control strategies. However, after considering public comments, the EPA has concluded that one monitor in each CBSA of 1 million or more persons will provide for monitoring of a wide range of diverse situations with regard to traffic volume, traffic patterns, roadway designs, terrain/topography, meteorology, climate, as well as surrounding land use and population characteristics. Accordingly, in the final rule EPA has modified the proposed requirements for CO monitors so that only one CO monitor is required in CBSAs of 1 million or more persons, as discussed in Section IV.B.3 below.

c. Implementation Schedule

The EPA received a number of comments on the timeline for implementation of any required CO monitoring promulgated as part of this rulemaking. ALA, ATS, and EDF stated that they ''* * * support EPA's requirement that CO monitors be installed in near-highway locations by July 1, 2013.'' In light of the support these commenters expressed for rapid deployment of near road CO monitors, these commenters may have intended to support the proposed implementation date of January 1, 2013 instead of July 1, 2013 as quoted. The Agency received a number of comments from state agencies, state agency organizations, and industry encouraging the Agency to extend the time by which any required monitoring must be implemented. For example, API suggested that the proposed date by which required near-road CO monitors be established be extended to July 1, 2013, while NACAA and WIDNR suggested January 1, 2014. Several commenters suggested that required near-road monitors should be phased in over a period of time. For example, NACAA, stated ''[i]t may be necessary to develop a program for phasing in new monitoring sites and reevaluate network implementation.'' NACAA also pointed to comments from CASAC that it would be advisable to phase in near-road monitoring for NO_2, because ''[t]he first round of sites could be used to gather information on appropriate siting in the near roadway environment, near roadway gradient, and spatial relationships.''

The EPA recognizes that states are already implementing newly required monitoring related to lead and NO_2, and that the current financial and logistical burdens may make the implementation of new monitoring requirements difficult. A number of state and industry commenters noted the need for funding to accommodate a new monitoring requirement, and some also noted the financial and logistical hardships that many states are currently experiencing (*e.g.,* IDEM, NACAA, NCDAQ, SCDHEC, and WIDNR). The EPA recognizes the significance of the financial and logistical burden that new monitoring requirements pose and the impact of multiple new monitoring requirements stemming from other recent rulemakings. As such, the Agency has taken these comments into consideration in the final rule with regard to when required CO monitors are to be operational, as discussed in Section IV.B.3 below.

d. Siting Criteria

The EPA received comments regarding the proposed revisions to microscale CO siting criteria. Those who commented (AAM, API, and NCDAQ) all supported having two sets of siting criteria that would apply to near-road CO monitors such as those that might be collocated with near-road NO_2 monitors and to those CO monitors operating in downtown areas and urban street canyon locations, respectively. AAM stated that ''* * * there should be two separate criteria for siting microscale CO monitors. The earlier height and distance guidelines are still appropriate for downtown areas and arterial highways with sidewalks, but a separate set of guidelines should be established for limited access, heavily-travelled expressways.'' API commented that ''* * * the proposed CO [near-road] criteria are acceptable. EPA should create two-tiered siting criteria for microscale CO monitoring * * *'' and that ''there will be an ongoing need for CO monitoring in downtown, urban and/or street canyon[s] for health-related concerns as well as SIP-related issues.'' Finally, NCDAQ stated that ''* * * the US EPA should maintain separate siting criteria for the two types of micro-scale CO monitoring sites * * *'' noting that the current siting criteria intended for downtown areas and urban street canyon sites ''* * * are still valid for that purpose and CO monitoring stations being placed for this purpose should still be required to meet these siting criteria.''

The EPA agrees with the commenters that the existing siting criteria are still appropriate for any existing or future downtown area or urban street canyon CO monitoring site, and that new siting criteria are appropriate for CO monitors being collocated with near road NO_2 monitors. As such, the Agency is finalizing siting criteria for microscale CO sites that include criteria for both downtown area/urban street canyon microscale sites and other near-road microscale CO sites, as presented below in Section IV.B.3.

e. Area-Wide Monitoring

The EPA received a number of comments from transportation groups,

public health and environmental groups, and an industry commenter (*e.g.,* AAM, ALA/ATS/EDF, American Association of State Highway and Transportation Officials [AASHTO], New York State Department of Transportation [NYSDOT], Texas Department of Transportation [TXDOT], and Virginia Department of Transportation [VDOT]) regarding the fate of many of the CO monitors in the current network that characterize concentrations representative of neighborhood or larger spatial scales,[32] known as area-wide monitors. For example, AASHTO commented that ''EPA appears to be proposing that CO monitoring sites to characterize area-wide CO concentration levels at the neighborhood and larger spatial scales is no longer required. AASHTO is concerned that this proposal will de-emphasize the need for neighborhood scale CO monitors.'' AASHTO and some state DOTs expressed that the data for neighborhood scale monitors are used for other purposes, such as National Environmental Policy Act (NEPA) and transportation conformity, and that they are concerned about the potential loss of these types of data in the future. In another example, ALA/ATS/EDF stated that they call upon EPA to ''establish a comprehensive roadside air pollution network, while retaining the current area-wide CO network.''

The EPA notes that prior to this final rulemaking, the only required CO monitoring within 40 CFR part 58, appendix D was for the operation of a CO monitor within all NCore multipollutant monitoring stations. There are approximately 80 NCore stations nationwide, and by design, they are area-wide monitoring sites. In the proposal, the Agency estimated that 345 CO monitors were operational at some point during 2009. A more recent examination of AQS data (utilizing EPA's Air Explorer Web tools located at *http://www.epa.gov/airexplorer*) indicate that approximately 328 CO monitors were operational as of May 20, 2011. These 328 active CO monitors include the 80 NCore monitors now in operation nationwide. This means that a significant portion of the current network is composed of monitors that are additional to those required by EPA as part of a national network design. It is critical to note that in this rulemaking the EPA is actually increasing the total number of required sites in the national CO monitoring network design and is not removing any area-wide monitoring requirements as AASHTO and other commenters suggested. Some of the potential for misperception on this issue may have arisen from the Agency's stated expectation that state and local air monitoring agencies will likely move existing CO monitors into near-road locations to satisfy the minimum monitoring requirements promulgated in this rulemaking. Based on this final rule, state and local agencies would only move, at most, approximately 52 monitors out of the 328 in operation (circa May 2011). Therefore a majority of CO monitors would likely continue operating in their existing locations. However, it should be noted that with ambient CO concentrations well below the NAAQS, particularly at area-wide sites, states may identify some area-wide CO monitors to be no longer necessary. As such, the retirement of these sites may be justified, and their removal would save state and local resources. The EPA does recognize the value of maintaining some level of area-wide CO monitoring to meet the overarching monitoring objectives, which includes tracking long-term trends and to support research. In the proposal, the Agency did not propose establishing requirements for additional area-wide monitoring sites because: (1) There is the existing NCore requirement, and (2) there is an expectation based on experience that some number of non-required area-wide sites will continue to operate in the future without minimum monitoring requirements. Regarding the removal or shutdown of any individual ambient air pollutant monitor, the Agency notes that there is a publicly transparent process by which any existing CO monitor would be shut-down. The shut-down of any State and Local Air Monitoring Station (SLAMS) monitor is allowable under certain conditions specified in 40 CFR 58.14 *System Modification.* These conditions provide state and local air agencies multiple options by which they may propose, with justification, for a monitor to be shut down. Whatever the justification may be, each monitor proposed to be shut-down must go through an established process to receive EPA Regional Administrator approval for shut-down. As part of that process, the EPA Regional Administrator provides opportunity for public comment before making a decision to approve or disapprove the request. In conclusion, the EPA believes that even without requirements for area-wide CO monitors additional to the NCore sites, some number of area-wide monitors will continue to operate into the future. EPA anticipates that monitors that states find useful for other regulatory purposes, such as NEPA, would be among the monitors that may continue to operate. The NCore sites, along with monitors currently operating in the absence of other area-wide monitoring requirements, will likely provide a sufficient set of area-wide monitors to meet monitoring objectives.

The EPA also received a number of comments from transportation groups, state and local groups, and an industry commenter (*e.g.,* AAM, AASHTO, NESCAUM, NYSDEC, NYSDOT, TXDOT, and VDOT) suggesting that required near-road CO monitors should be paired with an area-wide CO monitor within the same CBSA. For example, AASHTO recommended that ''* * * EPA ensure that adequate coverage continues from neighborhood-scale monitors to estimate background concentration levels, and that there is at least one neighborhood scale monitor in every urbanized area that is required to have a near-road monitor.'' NESCAUM recommended ''* * * that EPA locate near-road CO monitors near urban NCore CO sites'' (as noted above, NCore sites are area-wide sites by design).

The EPA recognizes that a pairing of near-road CO monitors with area-wide CO monitors will provide information by which an estimate of the difference between near-road concentrations to relative background concentrations might be determined. As noted earlier, the Agency believes that the combination of required NCore sites and those area-wide monitors currently operating in the absence of minimum monitoring requirements (of which many will likely continue operating in the future) will largely fulfill the area-wide component of any near-road site/area-wide site pairing in an urban area. An analysis of NCore site locations (site data available from *http://www.epa.gov/ttn/amtic/ncore/index.html*), along with

[32] Spatial scales are defined in 40 CFR Part 58 Appendix D, Section 1.2, where the scales of representativeness of most interest for the monitoring site types include:

1. Microscale—Defines the concentration in air volumes associated with area dimensions ranging from several meters up to about 100 meters.

2. Middle scale—Defines the concentration typical of areas up to several city blocks in size, with dimensions ranging from about 100 meters to 0.5 kilometers.

3. Neighborhood scale—Defines concentrations within some extended area of the city that has relatively uniform land use with dimensions in the 0.5 to 4.0 kilometers range.

4. Urban scale—Defines concentrations within an area of city-like dimensions, on the order of 4 to 50 kilometers. Within a city, the geographic placement of sources may result in there being no single site that can be said to represent air quality on an urban scale. The neighborhood and urban scales have the potential to overlap in applications that concern secondarily formed or homogeneously distributed air pollutants.

5. Regional scale—Defines usually a rural area of reasonably homogeneous geography without large sources, and extends from tens to hundreds of kilometers.

all those area-wide CO monitors believed to be operating as of May 20, 2011 (utilizing EPA's Air Explorer Web tools located at *http://www.epa.gov/airexplorer*) indicated that of the 52 CBSAs with a population of 1 million persons or more, based on 2010 Census data,, only 4 are believed to be without an area-wide CO monitor.[33] The EPA believes that, based on the considerations discussed above, the existing network will likely provide sufficient area-wide CO concentration information on which a near-road to area-wide data comparison could be based.

f. Regional Administrator Authority

The EPA received a number of comments from states and transportation groups (*e.g.,* AASHTO, NYSDOT, TCEQ, TXDOT, and VDOT) on the proposal for Regional Administrators to have the discretion to require monitoring above the minimum requirements as necessary to address situations where minimum monitoring requirements are not sufficient to meet monitoring objectives. For example, AASHTO commented that ''the proposed rule includes some examples of where additional monitors may be necessary. AASHTO is concerned that these brief examples may not be sufficient to ensure uniform application of this additional authority among the EPA Regions,'' and that EPA should provide guidance on this so that there is ''reasonable uniformity between EPA Regions in the implementation of these provisions.'' TCEQ commented that it ''does not agree that this discretion is appropriate, particularly where EPA has not proposed a process by which Regional Administrators must consult with states and the public regarding these decisions.'' Further TCEQ stated that ''* * * the potential requirement for additional monitors when 'minimum monitoring requirements are not sufficient to meet monitoring objectives' is overly broad and should be refined to include objective criteria that will consistently applied across all EPA Regions.''

The EPA notes that the authority of Regional Administrators to require additional monitoring above the minimum required is not unique to the CO NAAQS. For example, Regional Administrators have the authority to use their discretion to require additional NO_2, lead, and sulfur dioxide monitors (40 CFR part 58 appendix D sections 4.3.4, 4.4.3, and 4.5, respectively) and to work with state and local air agencies in designing and/or maintaining an appropriate ozone monitoring network (40 CFR part 58 appendix D section 4.1). The EPA believes that a nationally applicable network design may not always account for all locations in every area where monitors may be warranted. Example situations where the Regional Administrator authority could be utilized, which were provided in the proposal, could be for unmonitored locations where data or other information suggest that CO concentrations may be approaching or exceeding the NAAQS due to stationary CO sources, in downtown areas or urban street canyons, or in areas that are subject to high ground-level CO concentrations particularly due to or enhanced by topographical and meteorological impacts. The Agency cannot anticipate every example that may exist where the Regional Administrator authority might be used for inclusion in this preamble text. However, the Agency believes it is important for Regional Administrators to have the authority to address possible gaps in the minimally required monitoring network in situations such as those examples provided here. In response to public comments, the EPA notes that Regional Administrators would use their authority in collaboration with state agencies, working with stakeholders to design and/or maintain the most appropriate CO monitoring network to meet the needs of a given area. Finally, the Agency notes that any monitor required by the Regional Administrator (or any new monitor proposed by the state itself) is not done so with unfettered discretion. Any such action would be included in the Annual Monitoring Network Plan per 40 CFR 58.10, and this plan must be made available for public inspection and comment before any decisions are made by the EPA Regional Administrator.

3. Conclusions on the Network Design

This section provides the rationale and details for the final decision on changes to the CO monitoring network design and siting criteria. As discussed above in section IV.B.2.a, motor vehicle emissions are important contributors to ambient CO concentrations (REA, section 2.2), contributing nearly 60% of the total CO emitted nationally (per the 2008 NEI). As a result, microenvironments influenced by on-road mobile sources are important contributors to ambient CO exposures, particularly in urban areas (REA, section 2.7). Therefore, the Administrator has concluded that monitoring in the near-road environment to characterize and assess ambient CO concentrations continues to be an appropriate objective for the CO monitoring network. The EPA believes that the promulgation of minimum requirements for CO monitors in the near-road environment is necessary to ensure a network of adequate size and focus to provide data for comparison to the NAAQS, support research which includes health studies, allow for model verification, and fulfill multipollutant monitoring objectives. Further, considering the lack of CO monitors assessing higher trafficked roads in urban areas and CASAC's advice that the Agency develop greater monitoring capacity for CO in near-road environments (Brain and Samet, 2010b), the Agency believes that a number of CO monitors should be focused in such locations. Highly trafficked roads are expected to show elevated CO concentrations relative to area-wide concentrations and to represent the locations where ambient CO concentrations may be highest in an area. Regarding the locations where required near-road CO monitors might be placed, the EPA proposed that they be collocated with a subset of near-road NO_2 monitors. The EPA expects required near-road NO_2 monitors (as prescribed in 40 CFR part 58, appendix D, Section 4.3) to be adjacent to highly trafficked roads within the CBSAs where they are required. Recognizing this and also recognizing the benefits associated with collocating monitors at the same site, the Agency is finalizing requirements for CO monitors that will leverage required near-road NO_2 monitoring sites to house collocated near-road CO monitors to create data for comparison to the NAAQS, support research which includes health studies, provide data for model evaluation, and foster the fulfillment of multipollutant objectives.

As noted in section IV.B.2.b above, after considering public comments, EPA has modified the requirements for CO monitors from that which was proposed so that only one CO monitor is required in each CBSA in which near-road CO monitoring is required.[34] This approach reduces the total number of monitors that would have been required under the proposal from 75 monitors within 52 CBSAs to 52 monitors within 52 CBSAs (based on 2010 Census data). The EPA believes this network design addresses public comments while maintaining monitoring in a sufficiently diverse set

[33] The EPA notes that of the 52 CBSAs that have 1 million or more persons, 39 CBSAs contain an NCore monitoring station, which includes a CO monitor.

[34] This approach only requires one CO monitor to be installed in those CBSAs that have two required near-road NO_2 monitors.

of locations throughout 52 different urban areas around the country. By having monitors within 52 different CBSAs, this network design is expected to provide for monitoring in a wide range of diverse situations with regard to traffic volumes, traffic patterns, roadway designs, terrain/topography, meteorology, climate, as well as surrounding land use and population characteristics.

The EPA is generally requiring CO monitors to be collocated with near-road NO_2 monitors. However, upon consideration of public comments, the Agency is allowing flexibility for states to use an alternate near-road location, which includes downtown areas, urban street canyons, and other near-road locations. This flexibility is provided for a required CO monitor, on a case-by-case basis, with EPA Regional Administrator approval, when the state can provide quantitative justification showing the expectation of higher peak CO concentrations for that alternate location compared to a near-road NO_2 location. Such requests could be based upon appropriate modeling, exploratory monitoring, or other methods, comparing the alternative CO location and the near-road NO_2 location.

In summary, based upon 2010 Census Bureau data this final rule will require approximately 52 CO monitors to be collocated with near-road NO_2 monitors (or otherwise operated at an alternate, EPA Regional Administrator approved, near-road location where peak CO concentrations are expected) within 52 CBSAs that have populations of 1 million or more persons.

Regarding the deployment and operation of required CO monitors, the Agency recognizes that many state and local air agencies are under financial and related resource duress. EPA has concluded that allowing additional time for installing CO monitors will provide an opportunity for state and local agencies to work with EPA Regions to identify which existing CO monitors may be appropriate to relocate to the near-road locations. In many cases, EPA and the state may believe it is appropriate to relocate monitors, including some of those that are currently operated pursuant to existing maintenance plans. In these cases, additional time may be necessary to allow states to revisit and possibly revise, in consultation with (and subject to the approval of) the EPA Regions, existing maintenance plans in a way that may allow certain CO monitors to be free for relocation, if appropriate. Further, if a state chooses to investigate whether it will request that a required near-road CO monitor be sited in a near-road location other than a required near-road NO_2 site, the time allotted by the final rule is expected to provide states with adequate time to perform necessary analyses for submission to the Regional Administrator for approval. Furthermore, EPA has concluded that public comments suggesting a phased-in implementation, allowing for later stages to benefit from experience in an initial round of monitor installations, have merit.

As a result, the EPA has chosen not to require the implementation of required CO sites by January 1, 2013 as was proposed. Instead, the Agency is finalizing a two-phased implementation requirement. Those CO monitors required within CBSAs having 2.5 million or more persons are to be operational by January 1, 2015, although the Agency strongly encourages the implementation of these required monitors as soon as practicable. Those CO monitors required in CBSAs having 1 million or more persons (and fewer than 2.5 million persons) are to be operational by January 1, 2017. EPA intends to review the experience of states with the first round of near-road CO monitors and the data produced by such monitors and consider whether adjustments to the network requirements are warranted. These required CO monitors shall be reflected in a state's annual monitoring network plans due six months prior to installation, *i.e.,* on July 1, 2014 or July 1, 2016, respectively.

Regarding siting criteria, the EPA received public support to adjust microscale CO siting criteria to match those of near-road NO_2 monitors (and microscale $PM_{2.5}$ monitors). The Agency also was urged to retain the existing microscale siting criteria, for explicit use with microscale CO sites in downtown areas or urban street canyon settings. As a result, the EPA is retaining the existing siting criteria for microscale CO monitors in downtown areas and urban street canyons and is finalizing the additional siting criteria for those near-road microscale CO monitors outside of downtown areas and urban street canyons to have probe height and horizontal spacing to match those of near-road NO_2 monitors as prescribed in 40 CFR part 58 appendix E, sections 2, 4(d), 6.4(a), and table E–4.

Specifically, the Agency is finalizing the following: (1) A microscale near-road CO monitor inlet probe shall be between 2 and 7 meters above the ground; (2) a microscale CO monitor inlet probe in the near-road environment shall be placed so it has an unobstructed air flow, where no obstacles exist at or above the height of the monitor probe, between the monitor probe and the outside nearest edge of the traffic lanes of the target road segment; and (3) that CO monitors in the near-road environment shall have inlet probes as near as practicable to the outside nearest edge of the traffic lanes of the target road segment, but shall not be located at a distance greater than 50 meters in the horizontal from the outside nearest edge of the traffic lanes of the target road segment.

Further, as suggested through public comments, the EPA is retaining existing regulatory siting criteria language for microscale CO monitors in downtown areas or urban street canyon locations, where: (1) The inlet probe for a near-road microscale CO monitor in a downtown area or urban street canyon shall be between 2.5 meters and 3.5 meters above ground level; (2) the inlet probe for a near-road microscale CO monitor in a downtown area or urban street canyon shall be within 10 meters from the edge of the nearest traffic lane; and (3) near-road microscale CO monitors in street canyons are required to be at least 10 meters from an intersection.

Finally, the EPA recognizes that a monitoring network design may not always require monitoring on a national scale that is sufficient in fulfilling specific or otherwise unique data needs or monitoring objectives for every area across the nation. Thus, the EPA is finalizing the provision that EPA Regional Administrators have the authority to require monitoring above the minimum requirements, as necessary, in any area, to address situations where the minimally required monitoring network is not sufficient to meet monitoring objectives. Example situations where the Regional Administrator Authority could be utilized include, but are not limited to, those unmonitored locations where data or other information suggest that CO concentrations may be approaching or exceeding the NAAQS due to stationary CO sources, in downtown areas or urban street canyons, or in areas that are subject to high ground-level CO concentrations particularly due to or enhanced by topographical and meteorological impacts. In all cases in which a Regional Administrator may consider the need for additional monitoring, it is expected that the Regional Administrators will work with the state or local air agencies to evaluate evidence or needs to determine whether a particular area may warrant additional monitoring.

V. Statutory and Executive Order Reviews

A. Executive Order 12866: Regulatory Planning and Review and Executive Order 13563: Improving Regulation and Regulatory Review

Under Executive Order 12866 (58 FR 51735, October 4, 1993), this action is a ''significant regulatory action'' because it was deemed to ''raise novel legal or policy issues.'' Accordingly, EPA submitted this action to the Office of Management and Budget (OMB) for review under Executive Orders 12866 and 13563 (76 FR 3821, January 21, 2011) and any changes made in response to OMB recommendations have been documented in the docket for this action.

B. Paperwork Reduction Act

The information collection requirements in this final rule have been submitted for approval to the Office of Management and Budget (OMB) under the Paperwork Reduction Act, 44 U.S.C. 3501 *et seq.* The information collection requirements are not enforceable until OMB approves them. The Information Collection Request (ICR) document prepared by EPA for these revisions to part 58 has been assigned EPA ICR number 0940.24.

The information collected under 40 CFR part 53 (*e.g.,* test results, monitoring records, instruction manual, and other associated information) is needed to determine whether a candidate method intended for use in determining attainment of the NAAQS in 40 CFR part 50 will meet comparability requirements for designation as a FRM or FEM. We do not expect the number of FRM or FEM determinations to increase over the number that is currently used to estimate burden associated with CO FRM/FEM determinations provided in the current ICR for 40 CFR part 53 (EPA ICR numbers 0940.24). As such, no change in the burden estimate for 40 CFR part 53 has been made as part of this rulemaking.

The information collected and reported under 40 CFR part 58 is needed to determine compliance with the NAAQS, to characterize air quality and associated health impacts, to develop emissions control strategies, and to measure progress for the air pollution program. The amendments would revise the technical requirements for CO monitoring sites, require the relocation or siting of ambient CO air monitors, and the reporting of the collected ambient CO monitoring data to EPA's Air Quality System (AQS). The annual average reporting burden for the collection under 40 CFR part 58 (averaged over the first 3 years of this ICR) for a network of 311 CO monitors is $7,235,483. Burden is defined at 5 CFR 1320.3(b). State, local, and Tribal entities are eligible for State assistance grants provided by the Federal government under the CAA which can be used for monitors and related activities.

An agency may not conduct or sponsor, and a person is not required to respond to, a collection of information unless it displays a currently valid OMB control number. The OMB control numbers for EPA's regulations in 40 CFR are listed in 40 CFR part 9. When this ICR is approved by OMB, the Agency will publish a technical amendment to 40 CFR part 9 in the **Federal Register** to display the OMB control number for the approved information collection requirements contained in this final rule.

C. Regulatory Flexibility Act

The Regulatory Flexibility Act (RFA) generally requires an agency to prepare a regulatory flexibility analysis of any rule subject to notice and comment rulemaking requirements under the Administrative Procedure Act or any other statute unless the agency certifies that the rule will not have a significant economic impact on a substantial number of small entities. Small entities include small businesses, small organizations, and small governmental jurisdictions.

For purposes of assessing the impacts of today's rule on small entities, small entity is defined as: (1) A small business that is a small industrial entity as defined by the Small Business Administration's (SBA) regulations at 13 CFR 121.201; (2) a small governmental jurisdiction that is a government of a city, county, town, school district or special district with a population of less than 50,000; and (3) a small organization that is any not-for-profit enterprise which is independently owned and operated and is not dominant in its field.

After considering the economic impacts of this final rule on small entities, I certify that this action will not have a significant economic impact on a substantial number of small entities. This final rule will not impose any requirements on small entities. Rather, this rule retains existing national standards for allowable concentrations of CO in ambient air as required by section 109 of the CAA. See also *American Trucking Associations* v. *EPA.* 175 F. 3d at 1044–45 (NAAQS do not have significant impacts upon small entities because NAAQS themselves impose no regulations upon small entities). Similarly, the amendments to 40 CFR part 58 address the requirements for States to collect information and report compliance with the NAAQS and will not impose any requirements on small entities.

D. Unfunded Mandates Reform Act

This rule does not contain a Federal mandate that may result in expenditures of $100 million or more for State, local, and Tribal governments, in the aggregate, or the private sector in any one year. This rule retains the existing national ambient air quality standards for carbon monoxide. The expected costs associated with the monitoring requirements are described in EPA's ICR document, but those costs are expected to be well less than $100 million (adjusted for inflation) in the aggregate for any year. Furthermore, as indicated previously, in setting a NAAQS, EPA cannot consider the economic or technological feasibility of attaining ambient air quality standards. Thus, this rule is not subject to the requirements of sections 202 or 205 of the UMRA.

This rule is also not subject to the requirements of section 203 of the UMRA because it imposes no enforceable duty on any small governments.

E. Executive Order 13132: Federalism

This action does not have federalism implications. It will not have substantial direct effects on the States, on the relationship between the national government and the States, or on the distribution of power and responsibilities among the various levels of government, as specified in Executive Order 13132. The rule does not alter the relationship between the Federal government and the States regarding the establishment and implementation of air quality improvement programs as codified in the CAA. Under section 109 of the CAA, EPA is mandated to establish and review NAAQS; however, CAA section 116 preserves the rights of States to establish more stringent requirements if deemed necessary by a State. Furthermore, this rule does not impact CAA section 107 which establishes that the States have primary responsibility for implementation of the NAAQS. Finally, as noted in section D (above) on UMRA, this rule does not impose significant costs on State, local or Tribal governments or the private sector. Thus, Executive Order 13132 does not apply to this rule.

F. Executive Order 13175: Consultation and Coordination With Indian Tribal Governments

This action does not have Tribal implications, as specified in Executive Order 13175 (65 FR 67249, November 9, 2000). It does not have a substantial direct effect on one or more Indian Tribes, since Tribes are not obligated to adopt or implement any NAAQS. Thus, Executive Order 13175 does not apply to this action.

G. Executive Order 13045: Protection of Children From Environmental Health and Safety Risks

This action is not subject to EO 13045 (62 FR 19885, April 23, 1997) because it is not economically significant as defined in EO 12866, and because the Agency does not believe the environmental health or safety risks addressed by this action present a disproportionate risk to children. This action's health and risk assessments are described in section II.A.

H. Executive Order 13211: Actions That Significantly Affect Energy Supply, Distribution or Use

This action is not a ''significant energy action'' as defined in Executive Order 13211 (66 FR 28355 (May 22, 2001)) because it is not likely to have a significant adverse effect on the supply, distribution, or use of energy. The rule concerns the review of the NAAQS for CO. The rule does not prescribe specific pollution control strategies by which these ambient standards will be met. Such strategies are developed by States on a case-by-case basis, and EPA cannot predict whether the control options selected by States will include regulations on energy suppliers, distributors, or users.

I. National Technology Transfer and Advancement Act

Section 12(d) of the National Technology Transfer and Advancement Act of 1995 (NTTAA), Public Law 104–113, section 12(d) (15 U.S.C. 272 note) directs EPA to use voluntary consensus standards in its regulatory activities unless to do so would be inconsistent with applicable law or otherwise impractical. Voluntary consensus standards are technical standards (*e.g.,* materials specifications, test methods, sampling procedures, and business practices) that are developed or adopted by voluntary consensus standards bodies. The NTTAA directs EPA to provide Congress, through OMB, explanations when the Agency decides not to use available and applicable voluntary consensus standards.

This rulemaking involves technical standards with regard to ambient monitoring of CO. We have not identified any potentially applicable voluntary consensus standards that would adequately characterize ambient CO concentrations for the purposes of determining compliance with the CO NAAQS and none have been brought to our attention in comments. Therefore, EPA has decided to use the method ''Measurement Principle and Calibration Procedure for the Measurement of Carbon Monoxide in the Atmosphere (Non-Dispersive Infrared Photometry)'' (40 CFR part 50, appendix C), as revised by this action, for the purposes of ambient monitoring of CO concentrations.

J. Executive Order 12898: Federal Actions To Address Environmental Justice in Minority Populations and Low-Income Populations

Executive Order 12898 (59 FR 7629 (Feb. 16, 1994)) establishes Federal executive policy on environmental justice. Its main provision directs Federal agencies, to the greatest extent practicable and permitted by law, to make environmental justice part of their mission by identifying and addressing, as appropriate, disproportionately high and adverse human health or environmental effects of their programs, policies, and activities on minority populations and low-income populations in the United States.

EPA has determined that this final rule will not have disproportionately high and adverse human health or environmental effects on minority or low-income populations because it does not affect the level of protection provided to human health or the environment. The action in this notice is to retain without revision the existing NAAQS for CO. Therefore this action will not cause increases in source emissions or air concentrations.

K. Congressional Review Act

The Congressional Review Act, 5 U.S.C. 801 *et seq.,* as added by the Small Business Regulatory Enforcement Fairness Act of 1996, generally provides that before a rule may take effect, the agency promulgating the rule must submit a rule report, which includes a copy of the rule, to each House of the Congress and to the Comptroller General of the United States. EPA will submit a report containing this rule and other required information to the U.S. Senate, the U.S. House of Representatives, and the Comptroller General of the United States prior to publication of the rule in the **Federal Register**. A major rule cannot take effect until 60 days after it is published in the **Federal Register**. This action is not a ''major rule'' as defined by 5 U.S.C. 804(2). This rule will be effective October 31, 2011.

References

Adams K.F.; Koch G.; Chatterjee B.; Goldstein G.M.; O'Neil J.J.; Bromberg P.A.; Sheps D.S.; McAllister S.; Price C.J.; Bissette J. (1988) Acute elevation of blood carboxyhemoglobin to 6% impairs exercise performance and aggravates symptoms in patients with ischemic heart disease. J. Am. Coll. Cardiol. 12:900–909.

Allred E.N.; Bleecker E.R.; Chaitman B.R.; Dahms T.E.; Gottlieb S.O.; Hackney J.D.; Pagano M.; Selvester R.H.; Walden S.M.; Warren J. (1989a) Short-term effects of carbon monoxide exposure on the exercise performance of subjects with coronary artery disease. N. Engl. J. Med. 321:1426–1432.

Allred E.N.; Bleecker,E.R.; Chaitman B.R.; Dahms T.E.; Gottlieb S.O.; Hackney J.D.; Hayes D.; Pagano M.; Selvester R.H.; Walden S.M.; Warren J. (1989b) Acute effects of carbon monoxide exposure on individuals with coronary artery disease. Cambridge, MA: Health Effects Institute; research report no. 25.

Allred E.N.; Bleecker E.R.; Chaitman B.R.; Dahms T.E.; Gottlieb S.O.; Hackney J.D.; Pagano M.; Selvester R.H.; Walden S.M.; Warren J. (1991) Effects of carbon monoxide on myocardial ischemia. Environ. Health Perspect. 91:89–132.

AHA. (2003) Heart and Stroke Facts. American Heart Association, Dallas, TX. Available at: *http://www.americanheart.org/downloadable/heart/1056719919740HSFacts2003text.pdf.*

Anderson E.W.; Andelman R.J.; Strauch J.M.; Fortuin N.J. and Knelson, J.H. (1973) Effect of low level carbon monoxide exposure on onset and duration of angina pectoris. Annals of Internal Medicine 79:46–50.

Baldauf R.; Thoma E.; Hays M.; Shores R.; Kinsey J.; Gullett B.; Kimbrough S.; Isakov V.; Long T.; Snow R.; Khlystov A.; Weinstein J.; Chen F.L.; Seila R.; Olson D.; Gilmour I.; Cho S.H.; Watkins N.; Rowley P.; Bang J. (2008a). Traffic and meteorological impacts on near-road air quality: Summary of methods and trends from the Raleigh near-road study. J Air Waste Manag Assoc, 58:865–878. 190239

Baldauf R.; Thoma E.; Khlystov A.; Isakov V.; Bowker G.; Long T.; Snow R. (2008b). Impacts of noise barriers on near-road air quality. Atmos Environ, 42:7502–7507.

Bell M.L.; Peng R.D.; Dominici F.; Samet J.M. (2009) Emergency admissions for cardiovascular disease and ambient levels of carbon monoxide: Results for 126 U.S. urban counties, 1999–2005. Circulation, 120:949–955.

Bissette J.; Carr G.; Koch G.G.; Adams K.F.; Sheps D.S. (1986) Analysis of (events/time at risk) ratios from two period crossover studies. In: American Statistical Association 1986 proceedings of the Biopharmaceutical Section; August; Chicago, IL., Washington, DC:

American Statistical Asssociation; pp. 104–108.

Brain, J.D. (2009) Letter from Dr. J.D. Brain to Administrator Lisa Jackson. Re: Consultation on EPA's Carbon Monoxide National Ambient Air Quality Standards: Scope and Methods Plan for Health Risk and Exposure Assessment. CASAC–09–012. July 14, 2009.

Brain J. and Samet J. (2009) Letter from Drs. J.D. Brain and J.M. Samet to Administrator Lisa Jackson. Re: Review of EPA's Integrated Science Assessment for Carbon Monoxide (First External Review Draft) EPA–CASAC–09–011. June 24, 2009.

Brain, J.D. and Samet, J.M. (2010a) Letter from Drs. J.D. Brain and J.M. Samet to Administrator Lisa Jackson. Re: Review of the Risk and Exposure Assessment to Support the Review of the Carbon Monoxide (CO) Primary National Ambient Air Quality Standards: First External Review Draft. EPA–CASAC–10–006. February 12, 2010.

Brain J.D. and Samet J.M. (2010b) Letter from Drs. J.D. Brain and J.M. Samet to Administrator Lisa Jackson. Re: Review of the Risk and Exposure Assessment to Support the Review of the Carbon Monoxide (CO) Primary National Ambient Air Quality Standards: Second External Review Draft. EPA–CASAC–10–012. May 19, 2010.

Brain J.D. and Samet J.M. (2010c) Letter from Drs. J.D. Brain and J.M. Samet to Administrator Lisa Jackson. Re: Review of the Policy Assessment for the Review of the Carbon Monoxide National Ambient Air Quality Standards (NAAQS): External Review Draft. EPA–CASAC–10–013. June 8, 2010.

Brain J.D. and Samet J.M. (2010d) Letter from Drs. J.D. Brain and J.M. Samet to Administrator Lisa Jackson. Re: Review of Integrated Science Assessment for Carbon Monoxide (Second External Review Draft). EPA–CASAC–10–005. January 20, 2010.

Henderson R. (2008) Letter from Dr. Rogene Henderson, Chairman, Clean Air Scientific Advisory Committee, to Administrator Stephen Johnson. Re: Consultation on EPA's Draft Plan for Review of the Primary NAAQS for Carbon Monoxide CASAC–08–013. June 12, 2008.

Johnson T.; Capel J.; Paul R.; Wijnberg L. (1992) Estimation of Carbon Monoxide Exposure and associated Carboxyhemoglobin levels in Denver Residents Using a Probabalistic verion of NEM, prepared by International Technology for U.S. EPA, Office of Air Quality Planning and Standards, Durham, NC, Contract No. 68–D0–0062.

Johnson T.; Mihlan G.; LaPointe J.; Fletcher K.; Capel J. (2000) Estimation of Carbon Monoxide Exposures and Associated Carboxyhemoglobin Levels for Residents of Denver and Los Angeles Using pNEM/CO (Version 2.1). Report prepared by ICF Consulting and TRJ Environmental, Inc., under EPA Contract No. 68–D6–0064. U.S. Environmental Protection Agency, Research Triangle Park, North Carolina. Available at: *http://www.epa.gov/ttn/fera/human_related.html.* June 2000.

Kleinman M.T.; Davidson D.M.; Vandagriff R.B.; Caiozzo V.J.; Whittenberger J.L. (1989) Effects of short-term exposure to carbon monoxide in subjects with coronary artery disease. Arch. Environ. Health 44:361–369.

Kleinman M.T.; Leaf D.A.; Kelly E.; Caiozzo V.; Osann K.; O'Niell T. (1998) Urban angina in the mountains: effects of carbon monoxide and mild hypoxemia on subjects with chronic stable angina. Arch. Environ. Health 53:388–397.

Koken P.J.M.; Piver W.T.; Ye F.; Elixhauser A.; Olsen L.M.; Portier C.J. (2003) Temperature, air pollution, and hospitalization for cardiovascular diseases among elderly people in Denver. Environ Health Perspect, 111:1312–1317.

Lippmann, M. (1984) CASAC Findings and Recommendations on the Scientific Basis for a Revised NAAQS for Carbon Monoxide. [Letter to W.D. Ruckelshous, EPA Administrator]. May 17.

Linn W.S.; Szlachcic Y.; Gong H. Jr; Kinney P.L.; Berhane K.T. (2000) Air pollution and daily hospital admissions in metropolitan Los Angeles. Environ Health Perspect, 108:427–434.

Mann J.K.; Tager I.B.; Lurmann F.; Segal M.; Quesenberry C.P. Jr; Lugg M.M.; Shan J.; Van den Eeden S.K. (2002) Air pollution and hospital admissions for ischemic heart disease in persons with congestive heart failure or arrhythmia. Environ Health Perspect, 110:1247–1252.

Metzger K.B.; Tolbert P.E.; Klein M.; Peel J.L.; Flanders W.D.; Todd K.H.; Mulholland J.A.; Ryan P.B.; Frumkin H. (2004) Ambient air pollution and cardiovascular emergency department visits. Epidemiology, 15:46–56.

National Research Council. (2003) Managing Carbon Monoxide Pollution in Meteorological and Topographical Problem Areas. The National Academies Press, Washington, DC.

Sheps D.S.; Adams K.F. Jr.; Bromberg P.A.; Goldstein G.M.; O'Neil J.J.; Horstman D.; Koch G. (1987) Lack of effect of low levels of carboxyhemoglobin on cardiovascular function in patients with ischemic heart disease. Arch. Environ. Health 42:108–116.

Symons J.M.; Wang L.; Guallar E.; Howell E.; Dominici F.; Schwab M.; Ange B.A.; Samet J.; Ondov J.; Harrison D.; Geyh A. (2006) A case-crossover study of fine particulate matter air pollution and onset of congestive heart failure symptom exacerbation leading to hospitalization. Am J Epidemiol, 164:421–433.

Tolbert P.E.; Klein M.; Peel J.L.; Sarnat S.E.; Sarnat J.A. (2007) Multipollutant modeling issues in a study of ambient air quality and emergency department visits in Atlanta. J Expo Sci Environ Epidemiol, 17:S29–S35.

U.S. Environmental Protection Agency. (1979a) Air Quality Criteria for Carbon Monoxide. Office of Health and Environmental Assessment, Environmental Criteria and Assessment Office, Research Triangle Park, NC. EPA–600/8–79–022.

U.S. Environmental Protection Agency. (1979b) Assessment of Adverse Health Effects from Carbon Monoxide and Implications for Possible Modifications of the Standard. Office of Air Quality Planning and Standards, Research Triangle Park, NC.

U.S. Environmental Protection Agency. (1984a) Revised Evaluation of Health Effects Associated with Carbon Monoxide Exposure: An Addendum to the 1979 EPA Air Quality Criteria Document for Carbon Monoxide. Office of Health and Environmental Assessment, Environmental Criteria and Assessment Office, Research Triangle Park, NC. EPA–600/8–83–033F.

U.S. Environmental Protection Agency. (1984b) Review of the NAAQS for Carbon Monoxide: Reassessment of Scientific and Technical Information. Office of Air Quality Planning and Standards, Research Triangle Park. NC. EPA–450/584–904.

U.S. Environmental Protection Agency. (1991) Air Quality Criteria for Carbon Monoxide. Office of Health and Environmental Assessment, Environmental Criteria and Assessment Office, Research Triangle Park, NC. EPA/600/8–90/045F. Available at: *http://www.epa.gov/ttn/naaqs/standards/co/s_co_pr.html.*

U.S. Environmental Protection Agency. (1992) Review of the National Ambient Air Quality Standards for Carbon Monoxide: Assessment of Scientific and Technical Information, OAQPS Staff Paper. Office of Air Quality Planning and Standards, Research Triangle Park, NC. EPA/452/R–92–004.

U.S. Environmental Protection Agency. (2000) Air Quality Criteria for Carbon Monoxide. National Center for Environmental Assessment, Office of Research and Development, Research Triangle Park, NC. EPA/600/P–99/001F. Available at: *http://cfpub.epa.gov/ncea/cfm/recordisplay.cfm?deid=18163.*

U.S. Environmental Protection Agency. (2008a) Draft Plan for Review of the National Ambient Air Quality Standards for Carbon Monoxide. Also known as Draft Integrated Review Plan. National Center for Environmental Assessment and Office of Air Quality Planning and Standards, Research Triangle Park, NC. EPA–452/D–08–001. Available at: *http://www.epa.gov/ttn/naaqs/standards/co/s_co_cr_pd.html.*

U.S. Environmental Protection Agency. (2008b) Plan for Review of the National Ambient Air Quality Standards for Carbon Monoxide. *Also known as Integrated Review Plan.* National Center for Environmental Assessment and Office of Air Quality Planning and Standards, Research Triangle Park, NC. EPA–452/R–08–005. Available at: *http://www.epa.gov/ttn/naaqs/standards/co/s_co_cr_pd.html.*

U.S. Environmental Protection Agency. (2009a) Integrated Science Assessment for Carbon Monoxide, First External Review Draft. National Center for Environmental Assessment, Research

Triangle Park, NC. EPA/600/R–00/019. Available at: *http://www.epa.gov/ttn/naaqs/standards/co/s_co_cr_isa.html.*

U.S. Environmental Protection Agency. (2009b) Integrated Science Assessment for Carbon Monoxide, Second External Review Draft. National Center for Environmental Assessment, Research Triangle Park, NC. EPA/600/R–09/019B. Available at: *http://www.epa.gov/ttn/naaqs/standards/co/s_co_cr_isa.html.*

U.S. Environmental Protection Agency. (2009c) Carbon Monoxide National Ambient Air Quality Standards: Scope and Methods Plan for Health Risk and Exposure Assessment. Draft. Office of Air Quality Planning and Standards, Research Triangle Park, NC. EPA–452/R–09–004. Available at: *http://www.epa.gov/ttn/naaqs/standards/co/s_co_cr_pd.html.*

U.S. Environmental Protection Agency. (2009d) Risk and Exposure Assessment to Support the Review of the Carbon Monoxide Primary National Ambient Air Quality Standards, First External Review Draft. Office of Air Quality Planning and Standards, Research Triangle Park, NC. EPA–452/P–09–008. Available at: *http://www.epa.gov/ttn/naaqs/standards/co/s_co_cr_rea.html.*

U.S. Environmental Protection Agency. (2010a) Integrated Science Assessment for Carbon Monoxide. National Center for Environmental Assessment, Research Triangle Park, NC. EPA/600/R–09/019F. Available at: *http://www.epa.gov/ttn/naaqs/standards/co/s_co_cr_isa.html.*

U.S. Environmental Protection Agency. (2010b) Quantitative Risk and Exposure Assessment for Carbon Monoxide—Amended. Office of Air Quality Planning and Standards, Research Triangle Park, NC. EPA–452/R–10–009. Available at: *http://www.epa.gov/ttn/naaqs/standards/co/s_co_cr_rea.html.*

U.S. Environmental Protection Agency. (2010c) Policy Assessment for the Review of the Carbon Monoxide National Ambient Air Quality Standards. Office of Air Quality Planning and Standards, Research Triangle Park, NC. EPA 452/R–10–007. Available at: *http://www.epa.gov/ttn/naaqs/standards/co/s_co_cr_pa.html.*

U.S. Environmental Protection Agency. (2010d) Risk and Exposure Assessment to Support the Review of the Carbon Monoxide Primary National Ambient Air Quality Standards, Second External Review Draft, U.S Environmental Protection Agency, Research Triangle Park, NC, report no. EPA–452/P–10–004. Available at: *http://www.epa.gov/ttn/naaqs/standards/co/s_co_cr_rea.html.*

U.S. Environmental Protection Agency. (2010e) Policy Assessment for the Review of the Carbon Monoxide National Ambient Air Quality Standards, External Review Draft. Office of Air Quality Planning and Standards, Research Triangle Park, NC. EPA–452/P–10–005. Available at: *http://www.epa.gov/ttn/naaqs/standards/co/s_co_cr_pa.html.*

Watkins N. and Thompson R. (2010) CO Monitoring Network Background and Review. Memorandum to the Carbon Monoxide NAAQS Review Docket. EPA–HQ–OAR–2008–0015.

Wellenius G.A.; Bateson T.F.; Mittleman M.A.; Schwartz J. (2005) Particulate air pollution and the rate of hospitalization for congestive heart failure among medicare beneficiaries in Pittsburgh, Pennsylvania. Am J Epidemiol 161:1030–1036.

Zhu Y.; Hinds W.C.; Kim S.; Shen S.; Sioutas C. (2002) Study of ultrafine particles near a major highway with heavy-duty diesel traffic. Atmos Environ, 36:4323–4335.

List of Subjects

40 CFR Part 50

Environmental protection, Air pollution control, Carbon monoxide, Lead, Nitrogen dioxide, Ozone, Particulate matter, Sulfur oxides.

40 CFR Part 53

Environmental protection, Administrative practice and procedure, Air pollution control, Intergovernmental relations, Reporting and recordkeeping requirements.

40 CFR Part 58

Environmental protection, Administrative practice and procedure, Air pollution control, Intergovernmental relations, Reporting and recordkeeping requirements.

Dated: August 12, 2011.

Lisa P. Jackson,

Administrator.

For the reasons stated in the preamble, title 40, chapter I of the Code of Federal Regulations is amended as follows:

PART 50—NATIONAL PRIMARY AND SECONDARY AMBIENT AIR QUALITY STANDARDS

■ 1. The authority citation for part 50 continues to read as follows:

Authority: 42 U.S.C. 7401, *et seq.*

■ 2. Appendix C to part 50 is revised to read as follows:

Appendix C to Part 50—Measurement Principle and Calibration Procedure for the Measurement of Carbon Monoxide in the Atmosphere (Non-Dispersive Infrared Photometry)

1.0 Applicability

1.1 This non-dispersive infrared photometry (NDIR) Federal Reference Method (FRM) provides measurements of the concentration of carbon monoxide (CO) in ambient air for determining compliance with the primary and secondary National Ambient Air Quality Standards (NAAQS) for CO as specified in § 50.8 of this chapter. The method is applicable to continuous sampling and measurement of ambient CO concentrations suitable for determining 1-hour or longer average measurements. The method may also provide measurements of shorter averaging times, subject to specific analyzer performance limitations. Additional CO monitoring quality assurance procedures and guidance are provided in part 58, appendix A, of this chapter and in reference 1 of this appendix C.

2.0 Measurement Principle

2.1 Measurements of CO in ambient air are based on automated measurement of the absorption of infrared radiation by CO in an ambient air sample drawn into an analyzer employing non-wavelength-dispersive, infrared photometry (NDIR method). Infrared energy from a source in the photometer is passed through a cell containing the air sample to be analyzed, and the quantitative absorption of energy by CO in the sample cell is measured by a suitable detector. The photometer is sensitized specifically to CO by employing CO gas in a filter cell in the optical path, which, when compared to a differential optical path without a CO filter cell, limits the measured absorption to one or more of the characteristic wavelengths at which CO strongly absorbs. However, to meet measurement performance requirements, various optical filters, reference cells, rotating gas filter cells, dual-beam configurations, moisture traps, or other means may also be used to further enhance sensitivity and stability of the photometer and to minimize potential measurement interference from water vapor, carbon dioxide (CO_2), or other species. Also, various schemes may be used to provide a suitable zero reference for the photometer, and optional automatic compensation may be provided for the actual pressure and temperature of the air sample in the measurement cell. The measured infrared absorption, converted to a digital reading or an electrical output signal, indicates the measured CO concentration.

2.2 The measurement system is calibrated by referencing the analyzer's CO measurements to CO concentration standards traceable to a National Institute of Standards and Technology (NIST) primary standard for CO, as described in the associated calibration procedure specified in section 4 of this reference method.

2.3 An analyzer implementing this measurement principle will be considered a reference method only if it has been designated as a reference method in accordance with part 53 of this chapter.

2.4 Sampling *considerations.* The use of a particle filter in the sample inlet line of a CO FRM analyzer is optional and left to the discretion of the user unless such a filter is specified or recommended by the analyzer manufacturer in the analyzer's associated operation or instruction manual.

3.0 Interferences

3.1 The NDIR measurement principle is potentially susceptible to interference from water vapor and CO_2, which have some infrared absorption at wavelengths in common with CO and normally exist in the atmosphere. Various instrumental techniques can be used to effectively minimize these interferences.

4.0 Calibration Procedures

4.1 *Principle.* Either of two methods may be selected for dynamic multipoint calibration of FRM CO analyzers, using test gases of accurately known CO concentrations obtained from one or more compressed gas cylinders certified as CO transfer standards:

4.1.1 Dilution *method:* A single certified standard cylinder of CO is quantitatively diluted as necessary with zero air to obtain the various calibration concentration standards needed.

4.1.2 Multiple-*cylinder method:* Multiple, individually certified standard cylinders of CO are used for each of the various calibration concentration standards needed.

4.1.3 Additional information on calibration may be found in Section 12 of reference 1.

4.2 Apparatus. The major components and typical configurations of the calibration systems for the two calibration methods are shown in Figures 1 and 2. Either system may be made up using common laboratory components, or it may be a commercially manufactured system. In either case, the principal components are as follows:

4.2.1 CO standard gas flow control and measurement devices (or a combined device) capable of regulating and maintaining the standard gas flow rate constant to within ±2 percent and measuring the gas flow rate accurate to within ±2 percent, properly calibrated to a NIST-traceable standard.

4.2.2 For the dilution method (Figure 1), dilution air flow control and measurement devices (or a combined device) capable of regulating and maintaining the air flow rate constant to within ±2 percent and measuring the air flow rate accurate to within ±2 percent, properly calibrated to a NIST-traceable standard.

4.2.3 Standard gas pressure regulator(s) for the standard CO cylinder(s), suitable for use with a high-pressure CO gas cylinder and having a non-reactive diaphragm and internal parts and a suitable delivery pressure.

4.2.4 Mixing chamber for the dilution method of an inert material and of proper design to provide thorough mixing of CO standard gas and diluent air streams.

4.2.5 Output sampling manifold, constructed of an inert material and of sufficient diameter to ensure an insignificant pressure drop at the analyzer connection. The system must have a vent designed to ensure nearly atmospheric pressure at the analyzer connection port and to prevent ambient air from entering the manifold.

4.3 Reagents

4.3.1 CO gas concentration transfer standard(s) of CO in air, containing an appropriate concentration of CO suitable for the selected operating range of the analyzer under calibration and traceable to a NIST standard reference material (SRM). If the CO analyzer has significant sensitivity to CO_2, the CO standard(s) should also contain 350 to 400 ppm CO_2 to replicate the typical CO_2 concentration in ambient air. However, if the zero air dilution ratio used for the dilution method is not less than 100:1 and the zero air contains ambient levels of CO_2, then the CO standard may be contained in nitrogen and need not contain CO_2.

4.3.2 For the dilution method, clean zero air, free of contaminants that could cause a detectable response on or a change in sensitivity of the CO analyzer. The zero air should contain < 0.1 ppm CO.

4.4 Procedure *Using the Dilution Method*

4.4.1 Assemble or obtain a suitable dynamic dilution calibration system such as the one shown schematically in Figure 1. Generally, all calibration gases including zero air must be introduced into the sample inlet of the analyzer. However, if the analyzer has special, approved zero and span inlets and automatic valves to specifically allow introduction of calibration standards at near atmospheric pressure, such inlets may be used for calibration in lieu of the sample inlet. For specific operating instructions, refer to the manufacturer's manual.

4.4.2 Ensure that there are no leaks in the calibration system and that all flowmeters are properly and accurately calibrated, under the conditions of use, if appropriate, against a reliable volume or flow rate standard such as a soap-bubble meter or wet-test meter traceable to a NIST standard. All volumetric flow rates should be corrected to the same temperature and pressure such as 298.15 K (25 °C) and 760 mm Hg (101 kPa), using a correction formula such as the following:

$$F_c = F_m \frac{298.15 \times P_m}{760(T_m + 273.15)} \quad (1)$$

Where:

F_c = corrected flow rate (L/min at 25 °C and 760 mm Hg),

F_m = measured flow rate (at temperature T_m and pressure P_m),

P_m = measured pressure in mm Hg (absolute), and

T_m = measured temperature in degrees Celsius.

4.4.3 Select the operating range of the CO analyzer to be calibrated. Connect the measurement signal output of the analyzer to an appropriate readout instrument to allow the analyzer's measurement output to be continuously monitored during the calibration. Where possible, this readout instrument should be the same one used to record routine monitoring data, or, at least, an instrument that is as closely representative of that system as feasible.

4.4.4 Connect the inlet of the CO analyzer to the output-sampling manifold of the calibration system.

4.4.5 Adjust the calibration system to deliver zero air to the output manifold. The total air flow must exceed the total demand of the analyzer(s) connected to the output manifold to ensure that no ambient air is pulled into the manifold vent. Allow the analyzer to sample zero air until a stable response is obtained. After the response has stabilized, adjust the analyzer zero reading.

4.4.6 Adjust the zero air flow rate and the CO gas flow rate from the standard CO cylinder to provide a diluted CO concentration of approximately 80 percent of the measurement upper range limit (URL) of the operating range of the analyzer. The total air flow rate must exceed the total demand of the analyzer(s) connected to the output manifold to ensure that no ambient air is pulled into the manifold vent. The exact CO concentration is calculated from:

$$[CO]_{OUT} = \frac{[CO]_{STD} \times F_{CO}}{F_D + F_{CO}} \quad (2)$$

Where:

$[CO]_{OUT}$ = diluted CO concentration at the output manifold (ppm),

$[CO]_{STD}$ = concentration of the undiluted CO standard (ppm),

F_{CO} = flow rate of the CO standard (L/min), and

F_D = flow rate of the dilution air (L/min).

Sample this CO concentration until a stable response is obtained. Adjust the analyzer span control to obtain the desired analyzer response reading equivalent to the calculated standard concentration. If substantial adjustment of the analyzer span control is required, it may be necessary to recheck the zero and span adjustments by repeating steps 4.4.5 and 4.4.6. Record the CO concentration and the analyzer's final response.

4.4.7 Generate several additional concentrations (at least three evenly spaced points across the remaining scale are suggested to verify linearity) by decreasing F_{CO} or increasing F_D. Be sure the total flow exceeds the analyzer's total flow demand. For each concentration generated, calculate the exact CO concentration using equation (2). Record the concentration and the analyzer's stable response for each concentration. Plot the analyzer responses (vertical or y-axis) versus the corresponding CO concentrations (horizontal or x-axis). Calculate the linear regression slope and intercept of the calibration curve and verify that no point deviates from this line by more than 2 percent of the highest concentration tested.

4.5 Procedure *Using the Multiple-Cylinder Method.* Use the procedure for the dilution method with the following changes:

4.5.1 Use a multi-cylinder, dynamic calibration system such as the typical one shown in Figure 2.

4.5.2 The flowmeter need not be accurately calibrated, provided the flow in the output manifold can be verified to exceed the analyzer's flow demand.

4.5.3 The various CO calibration concentrations required in Steps 4.4.5, 4.4.6, and 4.4.7 are obtained without dilution by selecting zero air or the appropriate certified standard cylinder.

4.6 Frequency *of Calibration.* The frequency of calibration, as well as the number of points necessary to establish the calibration curve and the frequency of other performance checking, will vary by analyzer. However, the minimum frequency, acceptance criteria, and subsequent actions are specified in reference 1, appendix D, ''Measurement Quality Objectives and Validation Template for CO'' (page 5 of 30). The user's quality control program should provide guidelines for initial establishment of these variables and for subsequent alteration as operational experience is accumulated. Manufacturers of CO analyzers should include in their instruction/operation manuals information and guidance as to these variables and on other matters of operation, calibration, routine maintenance, and quality control.

5.0 Reference

1. *QA Handbook for Air Pollution Measurement Systems—Volume II. Ambient Air Quality Monitoring Program.* U.S. EPA. EPA–454/B–08–003 (2008).

BILLING CODE 6560–50–P

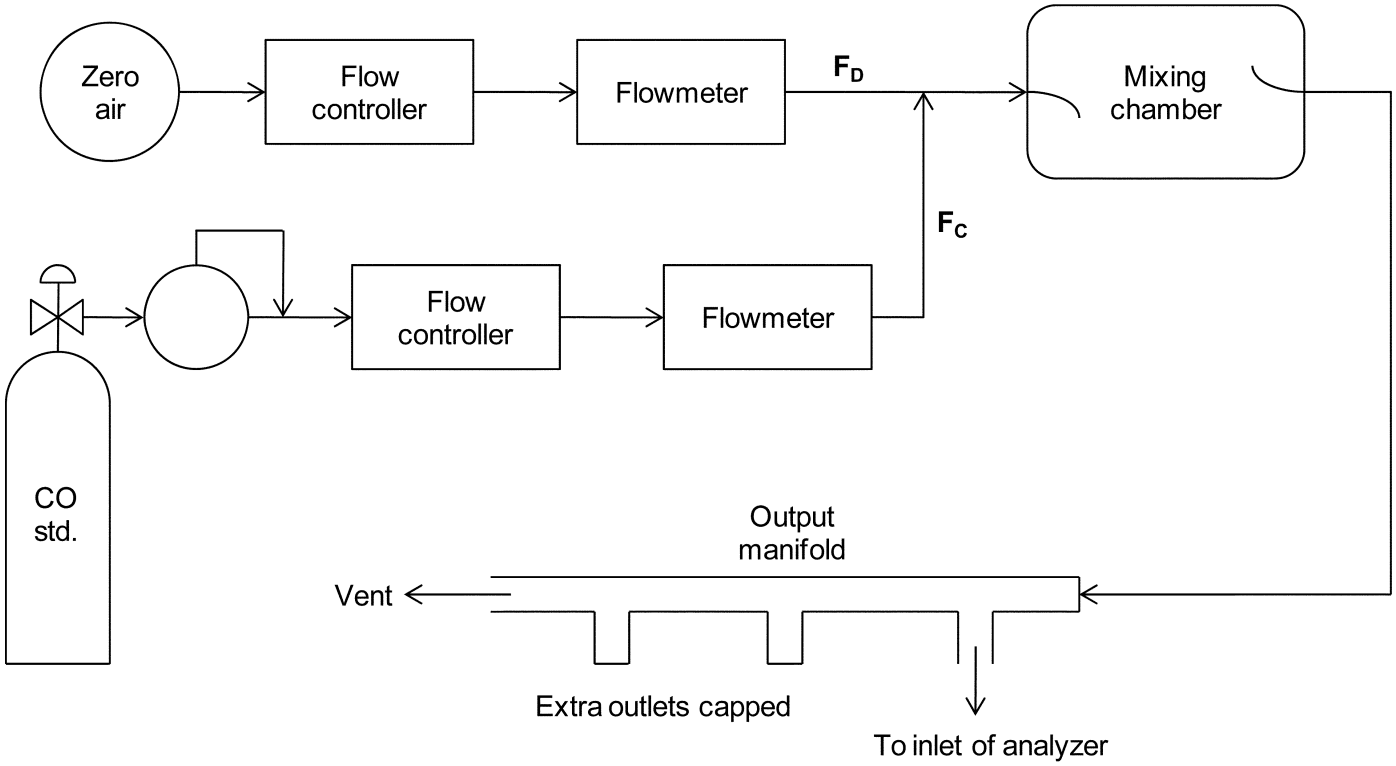

Figure 1. Dilution method for calibration of CO analyzers.

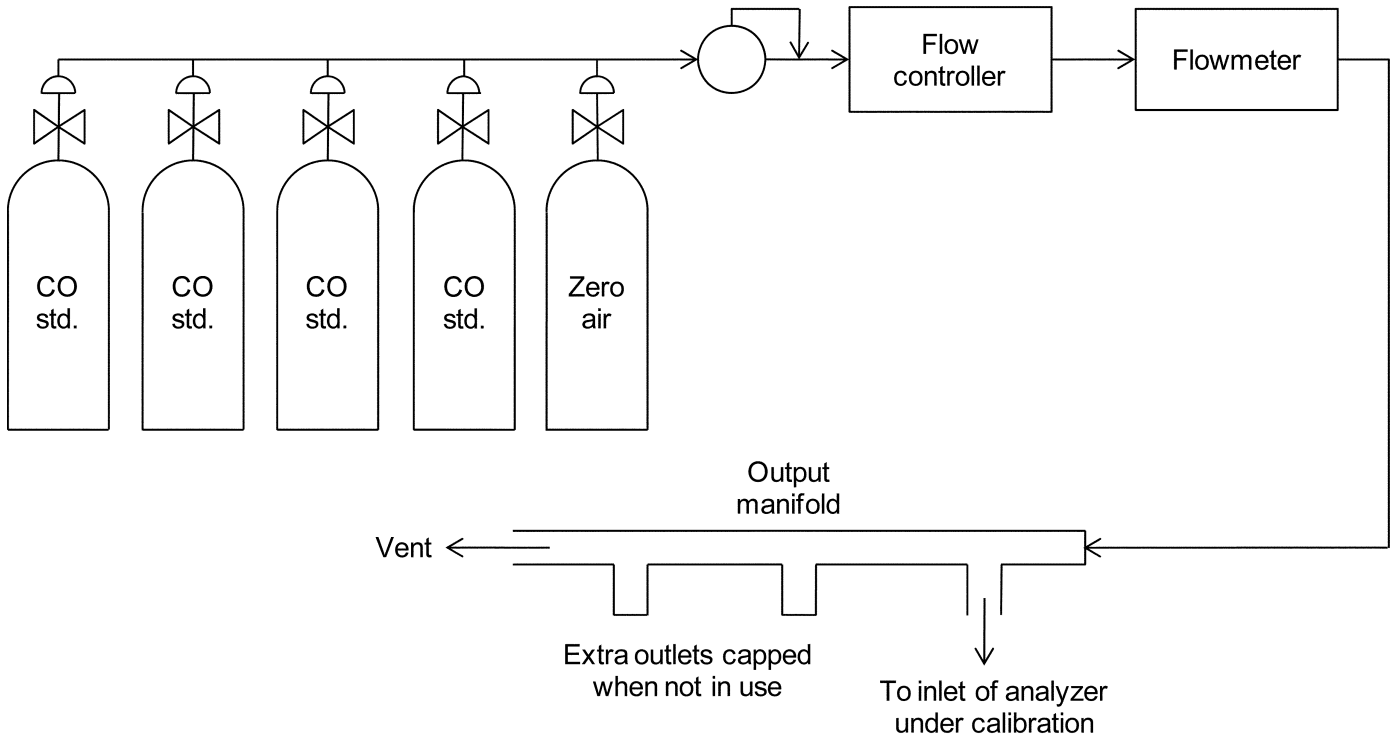

Figure 2. Multiple cylinder method for calibration of CO analyzers.

BILLING CODE 6560–50–C

PART 53—AMBIENT AIR QUALITY REFERENCE AND EQUIVALENT METHODS

■ 3. The authority citation for part 53 continues to read as follows:

Authority: 42 U.S.C. 7401, *et seq.*

■ 4. Subpart B of part 53 is revised to read as follows:

Subpart B—Procedures for Testing Performance Characteristics of Automated Methods for SO_2, CO, O_3, and NO_2

Sec.
53.20 General provisions.
53.21 Test conditions.
53.22 Generation of test atmospheres.
53.23 Test procedure.
Figure B–1 to Subpart B of Part 53—Example
Table B–1 to Subpart B of Part 53—Performance Limit Specifications for Automated Methods
Table B–2 to Subpart B of Part 53—Test Atmospheres
Table B–3 to Subpart B of Part 53—Interferent Test Concentration, 1 Parts Per Million
Table B–4 to Subpart B of Part 53— Line Voltage and Room Temperature Test Conditions
Table B–5 to Subpart B of Part 53—Symbols and Abbreviations
Appendix A to Subpart B—Optional Forms for Reporting Test Results

Subpart B—Procedures for Testing Performance Characteristics of Automated Methods for SO_2, CO, O_3, and NO_2

§ 53.20 General provisions.

(a) The test procedures given in this subpart shall be used to test the performance of candidate automated methods against the performance requirement specifications given in table B–1 to subpart B of part 53. A test analyzer representative of the candidate automated method must exhibit performance better than, or not outside, the specified limit or limits for each such performance parameter specified (except range) to satisfy the requirements of this subpart. Except as provided in paragraph (b) of this section, the measurement range of the candidate method must be the standard range specified in table B–1 to subpart B of part 53 to satisfy the requirements of this subpart.

(b) *Measurement ranges.* For a candidate method having more than one selectable measurement range, one range must be the standard range specified in table B–1 to subpart B of part 53, and a test analyzer representative of the method must pass the tests required by this subpart while operated in that range.

(i) *Higher ranges.* The tests may be repeated for one or more higher (broader) ranges (*i.e.,* ranges extending to higher concentrations) than the standard range specified in table B–1 to subpart B of part 53, provided that the range does not extend to concentrations more than four times the upper range limit of the standard range specified in table B–1 to subpart B of part 53. For such higher ranges, only the tests for range (calibration), noise at 80% of the upper range limit, and lag, rise and fall time are required to be repeated. For the purpose of testing a higher range, the test procedure of § 53.23(e) may be abridged to include only those components needed to test lag, rise and fall time.

(ii) *Lower ranges.* The tests may be repeated for one or more lower (narrower) ranges (*i.e.,* ones extending to lower concentrations) than the standard range specified in table B–1 to subpart B of part 53. For methods for some pollutants, table B–1 to subpart B of part 53 specifies special performance limit requirements for lower ranges. If special low-range performance limit requirements are not specified in table B–1 to subpart B of part 53, then the performance limit requirements for the standard range apply. For lower ranges for any method, only the tests for range (calibration), noise at 0% of the

measurement range, lower detectable limit, (and nitric oxide interference for SO_2 UVF methods) are required to be repeated, provided the tests for the standard range shows the applicable limit specifications are met for the other test parameters.

(iii) If the tests are conducted and passed only for the specified standard range, any FRM or FEM determination with respect to the method will be limited to that range. If the tests are passed for both the specified range and one or more higher or lower ranges, any such determination will include the additional higher or lower range(s) as well as the specified standard range. Appropriate test data shall be submitted for each range sought to be included in a FRM or FEM method determination under this paragraph (b).

(c) For each performance parameter (except range), the test procedure shall be initially repeated seven (7) times to yield 7 test results. Each result shall be compared with the corresponding performance limit specification in table B–1 to subpart B of part 53; a value higher than or outside the specified limit or limits constitutes a failure. These 7 results for each parameter shall be interpreted as follows:

(1) Zero (0) failures: The candidate method passes the test for the performance parameter.

(2) Three (3) or more failures: The candidate method fails the test for the performance parameter.

(3) One (1) or two (2) failures: Repeat the test procedures for the performance parameter eight (8) additional times yielding a total of fifteen (15) test results. The combined total of 15 test results shall then be interpreted as follows:

(i) One (1) or two (2) failures: The candidate method passes the test for the performance parameter.

(ii) Three (3) or more failures: The candidate method fails the test for the performance parameter.

(d) The tests for *zero drift, span drift, lag time, rise time, fall time,* and *precision* shall be carried out in a single integrated procedure conducted at various line voltages and ambient temperatures specified in § 53.23(e). A temperature-controlled environmental test chamber large enough to contain the test analyzer is recommended for this test. The tests for *noise, lower detectable limit,* and *interference equivalent* shall be conducted at any ambient temperature between 20 °C and 30 °C, at any normal line voltage between 105 and 125 volts, and shall be conducted such that not more than three (3) test results for each parameter are obtained in any 24-hour period.

(e) If necessary, all measurement response readings to be recorded shall be converted to concentration units or adjusted according to the calibration curve constructed in accordance with § 53.21(b).

(f) All recorder chart tracings (or equivalent data plots), records, test data and other documentation obtained from or pertinent to these tests shall be identified, dated, signed by the analyst performing the test, and submitted.

Note to § 53.20: Suggested formats for reporting the test results and calculations are provided in Figures B–2, B–3, B–4, B–5, and B–6 in appendix A to this subpart. Symbols and abbreviations used in this subpart are listed in table B–5 of appendix A to this subpart.

§ 53.21 Test conditions.

(a) *Set-up and start-up* of the test analyzer shall be in strict accordance with the operating instructions specified in the manual referred to in § 53.4(b)(3). Allow adequate warm-up or stabilization time as indicated in the operating instructions before beginning the tests. The test procedures assume that the test analyzer has a conventional analog measurement signal output that is connected to a suitable strip chart recorder of the servo, null-balance type. This recorder shall have a chart width of at least 25 centimeters, chart speeds up to 10 cm per hour, a response time of 1 second or less, a deadband of not more than 0.25 percent of full scale, and capability either of reading measurements at least 5 percent below zero or of offsetting the zero by at least 5 percent. If the test analyzer does not have an analog signal output, or if a digital or other type of measurement data output is used for the tests, an alternative measurement data recording device (or devices) may be used for recording the test data, provided that the device is reasonably suited to the nature and purposes of the tests, and an analog representation of the analyzer measurements for each test can be plotted or otherwise generated that is reasonably similar to the analog measurement recordings that would be produced by a conventional chart recorder connected to a conventional analog signal output.

(b) *Calibration* of the test analyzer shall be carried out prior to conducting the tests described in this subpart. The calibration shall be as indicated in the manual referred to in § 53.4(b)(3) and as follows: If the chart recorder or alternative data recorder does not have below zero capability, adjust either the controls of the test analyzer or the chart or data recorder to obtain a +5% offset zero reading on the recorder chart to facilitate observing negative response or drift. If the candidate method is not capable of negative response, the test analyzer (not the data recorder) shall be operated with a similar offset zero. Construct and submit a calibration curve showing a plot of recorder scale readings or other measurement output readings (vertical or y-axis) against pollutant concentrations presented to the analyzer for measurement (horizontal or x-axis). If applicable, a plot of base analog output units (volts, millivolts, milliamps, *etc.*) against pollutant concentrations shall also be obtained and submitted. All such calibration plots shall consist of at least seven (7) approximately equally spaced, identifiable points, including 0 and 90 ± 5 percent of the upper range limit (URL).

(c) Once the test analyzer has been set up and calibrated and the tests started, manual adjustment or normal periodic maintenance is permitted only every 3 days. Automatic adjustments which the test analyzer performs by itself are permitted at any time. The submitted records shall show clearly when any manual adjustment or periodic maintenance was made during the tests and describe the specific operations performed.

(d) If the test analyzer should malfunction during any of the performance tests, the tests for that parameter shall be repeated. A detailed explanation of the malfunction, remedial action taken, and whether recalibration was necessary (along with all pertinent records and charts) shall be submitted. If more than one malfunction occurs, all performance test procedures for all parameters shall be repeated.

(e) Tests for all performance parameters shall be completed on the same test analyzer; however, use of multiple test analyzers to accelerate testing is permissible for testing additional ranges of a multi-range candidate method.

§ 53.22 Generation of test atmospheres.

(a) Table B–2 to subpart B of part 53 specifies preferred methods for generating test atmospheres and suggested methods of verifying their concentrations. Only one means of establishing the concentration of a test atmosphere is normally required, provided that that means is adequately accurate and credible. If the method of generation can produce accurate, reproducible concentrations, verification is optional. If the method of generation is not reproducible or reasonably quantifiable, then establishment of the concentration by

some credible verification method is required.

(b) The test atmosphere delivery system shall be designed and constructed so as not to significantly alter the test atmosphere composition or concentration during the period of the test. The system shall be vented to insure that test atmospheres are presented to the test analyzer at very nearly atmospheric pressure. The delivery system shall be fabricated from borosilicate glass, FEP Teflon, or other material that is inert with regard to the gas or gases to be used.

(c) The output of the test atmosphere generation system shall be sufficiently stable to obtain stable response readings from the test analyzer during the required tests. If a permeation device is used for generation of a test atmosphere, the device, as well as the air passing over it, shall be controlled to 0.1 °C.

(d) All diluent air shall be zero air free of contaminants likely to react with the test atmospheres or cause a detectable response on the test analyzer.

(e) The concentration of each test atmosphere used shall be quantitatively established and/or verified before or during each series of tests. Samples for verifying test concentrations shall be collected from the test atmosphere delivery system as close as feasible to the sample intake port of the test analyzer.

(f) The accuracy of all flow measurements used to calculate test atmosphere concentrations shall be documented and referenced to a primary flow rate or volume standard (such as a spirometer, bubble meter, *etc.*). Any corrections shall be clearly shown. All flow measurements given in volume units shall be standardized to 25 °C and 760 mm Hg.

(g) Schematic drawings, photos, descriptions, and other information showing complete procedural details of the test atmosphere generation, verification, and delivery system shall be provided. All pertinent calculations shall be clearly indicated.

§ 53.23 Test procedures.

(a) *Range*—(1) *Technical definition.* The nominal minimum and maximum concentrations that a method is capable of measuring.

Note to § 53.23(a)(1): The nominal range is given as the lower and upper range limits in concentration units, for example, 0–0.5 parts per million (ppm).

(2) *Test procedure.* Determine and submit a suitable calibration curve, as specified in § 53.21(b), showing the test analyzer's measurement response over at least 95 percent of the required or indicated measurement range.

Note to § 53.23(a)(2): A single calibration curve for each measurement range for which an FRM or FEM designation is sought will normally suffice.

(b) *Noise*—(1) *Technical definition.* Spontaneous, short duration deviations in measurements or measurement signal output, about the mean output, that are not caused by input concentration changes. Measurement noise is determined as the standard deviation of a series of measurements of a constant concentration about the mean and is expressed in concentration units.

(2) *Test procedure.* (i) Allow sufficient time for the test analyzer to warm up and stabilize. Determine measurement noise at each of two fixed concentrations, first using zero air and then a pollutant test gas concentration as indicated below. The noise limit specification in table B–1 to subpart B of part 53 shall apply to both of these tests.

(ii) For an analyzer with an analog signal output, connect an integrating-type digital meter (DM) suitable for the test analyzer's output and accurate to three significant digits, to determine the analyzer's measurement output signal.

Note to § 53.23(b)(2): Use of a chart recorder in addition to the DM is optional.

(iii) Measure zero air with the test analyzer for 60 minutes. During this 60-minute interval, record twenty-five (25) test analyzer concentration measurements or DM readings at 2-minute intervals. (See Figure B–2 in appendix A of this subpart.)

(iv) If applicable, convert each DM test reading to concentration units (ppm) or adjust the test readings (if necessary) by reference to the test analyzer's calibration curve as determined in § 53.21(b). Label and record the test measurements or converted DM readings as $r_1, r_2, r_3 \ldots r_i \ldots r_{25}$.

(v) Calculate measurement noise as the standard deviation, S, as follows:

$$S = \sqrt{\frac{1}{24}\left[\sum_{i=1}^{25} r_i^2 - \frac{1}{25}\left(\sum_{i=1}^{25} r_i\right)^2\right]}$$

Where i indicates the i-th test measurement or DM reading in ppm.

(vi) Let S at 0 ppm be identified as S_0; compare S_0 to the noise limit specification given in table B–1 to subpart B of part 53.

(vii) Repeat steps in Paragraphs (b)(2)(iii) through (v) of this section using a pollutant test atmosphere concentration of 80 ± 5 percent of the URL instead of zero air, and let S at 80 percent of the URL be identified as S_{80}. Compare S_{80} to the noise limit specification given in table B–1 to subpart B of part 53.

(viii) Both S_0 and S_{80} must be less than or equal to the table B–1 to subpart B of part 53 noise limit specification to pass the test for the noise parameter.

(c) *Lower detectable limit*—(1) *Technical definition.* The minimum pollutant concentration that produces a measurement or measurement output signal of at least twice the noise level.

(2) *Test procedure.* (i) Allow sufficient time for the test analyzer to warm up and stabilize. Measure zero air and record the stable measurement reading in ppm as B_Z. (See Figure B–3 in appendix A of this subpart.)

(ii) Generate and measure a pollutant test concentration equal to the value for the lower detectable limit specified in table B–1 to subpart B of part 53.

Note to § 53.23(c)(2): If necessary, the test concentration may be generated or verified at a higher concentration, then quantitatively and accurately diluted with zero air to the final required test concentration.

(iii) Record the test analyzer's stable measurement reading, in ppm, as B_L.

(iv) Determine the lower detectable limit (LDL) test result as $LDL = B_L - B_Z$. Compare this LDL value with the noise level, S_0, determined in § 53.23(b), for the 0 concentration test atmosphere. LDL must be equal to or higher than $2 \times S_0$ to pass this test.

(d) *Interference equivalent*—(1) *Technical definition.* Positive or negative measurement response caused by a substance other than the one being measured.

(2) *Test procedure.* The test analyzer shall be tested for all substances likely to cause a detectable response. The test analyzer shall be challenged, in turn, with each potential interfering agent (interferent) specified in table B–3 to subpart B of part 53. In the event that there are substances likely to cause a significant interference which have not been specified in table B–3 to subpart B of part 53, these substances shall also be tested, in a manner similar to that for the specified interferents, at a concentration substantially higher than that likely to be found in the ambient air. The interference may be either positive or negative, depending on whether the test analyzer's measurement response is increased or decreased by the presence of the interferent. Interference equivalents shall be determined by mixing each interferent, one at a time, with the pollutant at an interferent test concentration not lower than the test concentration specified in table B–3 to subpart B of part 53 (or as otherwise required for unlisted interferents), and

comparing the test analyzer's measurement response to the response caused by the pollutant alone. Known gas-phase reactions that might occur between a listed interferent and the pollutant are designated by footnote 3 in table B–3 to subpart B of part 53. In these cases, the interference equivalent shall be determined without mixing with the pollutant.

(i) Allow sufficient time for warm-up and stabilization of the test analyzer.

(ii) For a candidate method using a prefilter or scrubber device based upon a chemical reaction to derive part of its specificity and which device requires periodic service or maintenance, the test analyzer shall be ''conditioned'' prior to conducting each interference test series. This requirement includes conditioning for the NO_2 converter in chemiluminescence $NO/NO_2/NO_X$ analyzers and for the ozone scrubber in UV-absorption ozone analyzers. Conditioning is as follows:

(A) Service or perform the indicated maintenance on the scrubber or prefilter device, as if it were due for such maintenance, as directed in the manual referred to in § 53.4(b)(3).

(B) Before testing for each potential interferent, allow the test analyzer to sample through the prefilter or scrubber device a test atmosphere containing the interferent at a concentration not lower than the value specified in table B–3 to subpart B of part 53 (or, for unlisted potential interferents, at a concentration substantially higher than likely to be found in ambient air). Sampling shall be at the normal flow rate and shall be continued for 6 continuous hours prior to the interference test series. Conditioning for all applicable interferents prior to any of the interference tests is permissible. Also permissible is simultaneous conditioning with multiple interferents, provided no interferent reactions are likely to occur in the conditioning system.

(iii) Generate three test atmosphere streams as follows:

(A) Test atmosphere *P:* Pollutant test concentration.

(B) Test atmosphere *I:* Interferent test concentration.

(C) Test atmosphere *Z:* Zero air.

(iv) Adjust the individual flow rates and the pollutant or interferent generators for the three test atmospheres as follows:

(A) The flow rates of test atmospheres *I* and *Z* shall be equal.

(B) The concentration of the pollutant in test atmosphere *P* shall be adjusted such that when *P* is mixed (diluted) with either test atmosphere *I* or *Z,* the resulting concentration of pollutant shall be as specified in table B–3 to subpart B of part 53.

(C) The concentration of the interferent in test atmosphere *I* shall be adjusted such that when *I* is mixed (diluted) with test atmosphere *P,* the resulting concentration of interferent shall be not less than the value specified in table B–3 to subpart B of part 53 (or as otherwise required for unlisted potential interferents).

(D) To minimize concentration errors due to flow rate differences between *I* and *Z,* it is recommended that, when possible, the flow rate of *P* be from 10 to 20 times larger than the flow rates of *I* and *Z.*

(v) Mix test atmospheres *P* and *Z* by passing the total flow of both atmospheres through a (passive) mixing component to insure complete mixing of the gases.

(vi) Sample and measure the mixture of test atmospheres *P* and *Z* with the test analyzer. Allow for a stable measurement reading, and record the reading, in concentration units, as *R* (see Figure B–3).

(vii) Mix test atmospheres *P* and *I* by passing the total flow of both atmospheres through a (passive) mixing component to insure complete mixing of the gases.

(viii) Sample and measure this mixture of *P* and *I* with the test analyzer. Record the stable measurement reading, in concentration units, as R_I.

(ix) Calculate the interference equivalent (*IE*) test result as:

$$IE = R_I - R.$$

IE must be within the limits (inclusive) specified in table B–1 to subpart B of part 53 for each interferent tested to pass the interference equivalent test.

(x) Follow steps (iii) through (ix) of this section, in turn, to determine the interference equivalent for each listed interferent as well as for any other potential interferents identified.

(xi) For those potential interferents which cannot be mixed with the pollutant, as indicated by footnote (3) in table B–3 to subpart B of part 53, adjust the concentration of test atmosphere *I* to the specified value without being mixed or diluted by the pollutant test atmosphere. Determine *IE* as follows:

(A) Sample and measure test atmosphere *Z* (zero air). Allow for a stable measurement reading and record the reading, in concentration units, as *R.*

(B) Sample and measure the interferent test atmosphere *I.* If the test analyzer is not capable of negative readings, adjust the analyzer (not the recorder) to give an offset zero. Record the stable reading in concentration units as R_I, extrapolating the calibration curve, if necessary, to represent negative readings.

(C) Calculate $IE = R_I - R$. *IE* must be within the limits (inclusive) specified in table B–1 to subpart B of part 53 for each interferent tested to pass the interference equivalent test.

(xii) Sum the *absolute value* of all the individual interference equivalent test results. This sum must be equal to or less than the total interferent limit given in table B–1 to subpart B of part 53 to pass the test.

(e) *Zero drift, span drift, lag time, rise time, fall time, and precision*—(1) *Technical definitions*—(i) *Zero drift:* The change in measurement response to zero pollutant concentration over 12- and 24-hour periods of continuous unadjusted operation.

(ii) *Span drift:* The percent change in measurement response to an up-scale pollutant concentration over a 24-hour period of continuous unadjusted operation.

(iii) *Lag time:* The time interval between a step change in input concentration and the first observable corresponding change in measurement response.

(iv) *Rise time:* The time interval between initial measurement response and 95 percent of final response after a step increase in input concentration.

(v) *Fall time:* The time interval between initial measurement response and 95 percent of final response after a step decrease in input concentration.

(vi) *Precision:* Variation about the mean of repeated measurements of the same pollutant concentration, expressed as one standard deviation.

(2) Tests for these performance parameters shall be accomplished over a period of seven (7) or fifteen (15) test days. During this time, the line voltage supplied to the test analyzer and the ambient temperature surrounding the analyzer shall be changed from day to day, as required in paragraph (e)(4) of this section. One test result for each performance parameter shall be obtained each test day, for seven (7) or fifteen (15) test days, as determined from the test results of the first seven days. The tests for each test day are performed in a single integrated procedure.

(3) The 24-hour test day may begin at any clock hour. The first approximately 12 hours of each test day are required for testing 12-hour zero drift. Tests for the other parameters shall be conducted any time during the remaining 12 hours.

(4) Table B–4 to subpart B of part 53 specifies the line voltage and room temperature to be used for each test day. The applicant may elect to specify a

wider temperature range (minimum and maximum temperatures) than the range specified in table B–4 to subpart B of part 53 and to conduct these tests over that wider temperature range in lieu of the specified temperature range. If the test results show that all test parameters of this section § 53.23(e) are passed over this wider temperature range, a subsequent FRM or FEM designation for the candidate method based in part on this test shall indicate approval for operation of the method over such wider temperature range. The line voltage and temperature shall be changed to the specified values (or to the alternative, wider temperature values, if applicable) at the start of each test day (*i.e.,* at the start of the 12-hour zero test). Initial adjustments (day zero) shall be made at a line voltage of 115 volts (rms) and a room temperature of 25 °C.

(5) The tests shall be conducted in blocks consisting of 3 test days each until 7 (or 15, if necessary) test results have been obtained. (The final block may contain fewer than three test days.) Test days need not be contiguous days, but during any idle time between tests or test days, the test analyzer must operate continuously and measurements must be recorded continuously at a low chart speed (or equivalent data recording) and included with the test data. If a test is interrupted by an occurrence other than a malfunction of the test analyzer, only the block during which the interruption occurred shall be repeated.

(6) During each test block, manual adjustments to the electronics, gas, or reagent flows or periodic maintenance shall not be permitted. Automatic adjustments that the test analyzer performs by itself are permitted at any time.

(7) At least 4 hours prior to the start of the first test day of each test block, the test analyzer may be adjusted and/or serviced according to the periodic maintenance procedures specified in the manual referred to in § 53.4(b)(3). If a new block is to immediately follow a previous block, such adjustments or servicing may be done immediately after completion of the day's tests for the last day of the previous block and at the voltage and temperature specified for that day, but only on test days 3, 6, 9, and 12.

Note to § 53.23(e)(7): If necessary, the beginning of the test days succeeding such maintenance or adjustment may be delayed as required to complete the service or adjustment operation.

(8) All measurement response readings to be recorded shall be converted to concentration units or adjusted (if necessary) according to the calibration curve. Whenever a test atmosphere is to be measured but a stable reading is not required, the test atmosphere shall be sampled and measured long enough to cause a change in measurement response of at least 10% of full scale. Identify all readings and other pertinent data on the strip chart (or equivalent test data record). (See Figure B–1 to subpart B of part 53 illustrating the pattern of the required readings.)

(9) *Test procedure.* (i) Arrange to generate pollutant test atmospheres as follows. Test atmospheres A_0, A_{20}, and A_{80} shall be maintained consistent during the tests and reproducible from test day to test day.

Test atmosphere	Pollutant concentration (percent)
A_0	Zero air.
A_{20}	20 ± 5 of the upper range limit.
A_{30}	30 ± 5 of the upper range limit.
A_{80}	80 ± 5 of the upper range limit.
A_{90}	90 ± 5 of the upper range limit.

(ii) For steps within paragraphs (e)(9)(xxv) through (e)(9)(xxxi) of this section, a chart speed of at least 10 centimeters per hour (or equivalent resolution for a digital representation) shall be used to clearly show changes in measurement responses. The actual chart speed, chart speed changes, and time checks shall be clearly marked on the chart.

(iii) *Test day 0.* Allow sufficient time for the test analyzer to warm up and stabilize at a line voltage of 115 volts and a room temperature of 25 °C. Adjust the zero baseline to 5 percent of chart (see § 53.21(b)) and recalibrate, if necessary. No further adjustments shall be made to the analyzer until the end of the tests on the third, sixth, ninth, or twelfth test day.

(iv) Measure test atmosphere A_0 until a stable measurement reading is obtained and record this reading (in ppm) as Z'_n, where $n = 0$ (see Figure B–4 in appendix A of this subpart).

(v) [Reserved.]

(vi) Measure test atmosphere A_{80}. Allow for a stable measurement reading and record it as S'_n, where $n = 0$.

(vii) The above readings for Z'_0 and S'_0 should be taken at least four (4) hours prior to the beginning of test day 1.

(viii) At the beginning of each test day, adjust the line voltage and room temperature to the values given in table B–4 to subpart B of part 53 (or to the corresponding alternative temperature if a wider temperature range is being tested).

(ix) Measure test atmosphere A_0 continuously for at least twelve (12) continuous hours during each test day.

(x) After the 12-hour zero drift test (step ix) is complete, sample test atmosphere A_0. A stable reading is not required.

(xi) Measure test atmosphere A_{20} and record the stable reading (in ppm) as P_1. (See Figure B–4 in appendix A.)

(xii) Sample test atmosphere A_{30}; a stable reading is not required.

(xiii) Measure test atmosphere A_{20} and record the stable reading as P_2.

(xiv) Sample test atmosphere A_0; a stable reading is not required.

(xv) Measure test atmosphere A_{20} and record the stable reading as P_3.

(xvi) Sample test atmosphere A_{30}; a stable reading is not required.

(xvii) Measure test atmosphere A_{20} and record the stable reading as P_4.

(xviii) Sample test atmosphere A_0; a stable reading is not required.

(xix) Measure test atmosphere A_{20} and record the stable reading as P_5.

(xx) Sample test atmosphere A_{30}; a stable reading is not required.

(xxi) Measure test atmosphere A_{20} and record the stable reading as P_6.

(xxii) Measure test atmosphere A_{80} and record the stable reading as P_7.

(xxiii) Sample test atmosphere A_{90}; a stable reading is not required.

(xxiv) Measure test atmosphere A_{80} and record the stable reading as P_8. Increase the chart speed to at least 10 centimeters per hour.

(xxv) Measure test atmosphere A_0. Record the stable reading as L_1.

(xxvi) Quickly switch the test analyzer to measure test atmosphere A_{80} and mark the recorder chart to show, or otherwise record, the exact time when the switch occurred.

(xxvii) Measure test atmosphere A_{80} and record the stable reading as P_9.

(xxviii) Sample test atmosphere A_{90}; a stable reading is not required.

(xxix) Measure test atmosphere A_{80} and record the stable reading as P_{10}.

(xxx) Measure test atmosphere A_0 and record the stable reading as L_2.

(xxxi) Measure test atmosphere A_{80} and record the stable reading as P_{11}.

(xxxii) Sample test atmosphere A_{90}; a stable reading is not required.

(xxxiii) Measure test atmosphere A_{80} and record the stable reading as P_{12}.

(xxxiv) Repeat steps within paragraphs (e)(9)(viii) through (e)(9)(xxxiii) of this section, each test day.

(xxxv) If zero and span adjustments are made after the readings are taken on

test days 3, 6, 9, or 12, complete all adjustments; then measure test atmospheres A_0 and $A_{80.}$ Allow for a stable reading on each, and record the readings as Z'_n and S'_n, respectively, where n = the test day number (3, 6, 9, or 12). These readings must be made at least 4 hours prior to the start of the next test day.

(10) Determine the results of each day's tests as follows. Mark the recorder chart to show readings and determinations.

(i) *Zero drift.* (A) Determine the 12-hour zero drift by examining the strip chart pertaining to the 12-hour continuous zero air test. Determine the minimum ($C_{min.}$) and maximum ($C_{max.}$) measurement readings (in ppm) during this period of 12 consecutive hours, extrapolating the calibration curve to negative concentration units if necessary. Calculate the 12-hour zero drift (12*ZD*) as $12ZD = C_{max.} - C_{min.}$ (See Figure B–5 in appendix A.)

(B) Calculate the 24-hour zero drift (24*ZD*) for the *n*-th test day as $24ZD_n = Z_n - Z_{n-1}$, or $24ZD_n = Z_n - Z'_{n-1}$ if zero adjustment was made on the previous test day, where $Z_n = ½(L_1+L_2)$ for L_1 and L_2 taken on the *n*-th test day.

(C) Compare 12*ZD* and 24*ZD* to the zero drift limit specifications in table B–1 to subpart B of part 53. Both 12*ZD* and 24*ZD* must be within the specified limits (inclusive) to pass the test for zero drift.

(ii) *Span drift.*

(A) Calculate the span drift (*SD*) as:

$$SD_n = \frac{S_n - S_{n-1}}{S_{n-1}} \times 100\%$$

or if a span adjustment was made on the previous test day,

$$SD_n = \frac{S_n - S'_{n-1}}{S'_{n-1}} \times 100\%$$

where

$$S_n = \frac{1}{6}\sum_{i=7}^{12} P_i ,$$

n indicates the *n*-th test day, and *i* indicates the *i*-th measurement reading on the *n*-th test day.

(B) *SD* must be within the span drift limits (inclusive) specified in table B–1 to subpart B of part 53 to pass the test for span drift.

(iii) *Lag time.* Determine, from the strip chart (or alternative test data record), the elapsed time in minutes between the change in test concentration (or mark) made in step (xxvi) and the first observable (two times the noise level) measurement response. This time must be equal to or less than the lag time limit specified in table B–1 to subpart B of part 53 to pass the test for lag time.

(iv) *Rise time.* Calculate 95 percent of measurement reading P_9 and determine, from the recorder chart (or alternative test data record), the elapsed time between the first observable (two times noise level) measurement response and a response equal to 95 percent of the P_9 reading. This time must be equal to or less than the rise time limit specified in table B–1 to subpart B of part 53 to pass the test for rise time.

(v) *Fall time.* Calculate five percent of ($P_{10} - L_2$) and determine, from the strip chart (or alternative test record), the elapsed time in minutes between the first observable decrease in measurement response following reading P_{10} and a response equal to L_2 + five percent of ($P_{10} - L_2$). This time must be equal to or less than the fall time limit specification in table B–1 to subpart B of part 53 to pass the test for fall time.

(vi) *Precision.* Calculate precision (both P_{20} and P_{80}) for each test day as follows:

(A)

$$P_{20} = \frac{1}{URL}\sqrt{\frac{1}{5}\left[\sum_{i=1}^{6} P_i^2 - \frac{1}{6}\left(\sum_{i=1}^{6} P_i\right)^2\right]} \times 100\%$$

(B)

$$P_{80} = \frac{1}{URL}\sqrt{\frac{1}{5}\left[\sum_{i=7}^{12} P_i^2 - \frac{1}{6}\left(\sum_{i=7}^{12} P_i\right)^2\right]} \times 100\%$$

(C) Both P_{20} and P_{80} must be equal to or less than the precision limits specified in table B–1 to subpart B of part 53 to pass the test for precision.

BILLING CODE 6560–50–P

Figure B–1 to Subpart B of Part 53—Example

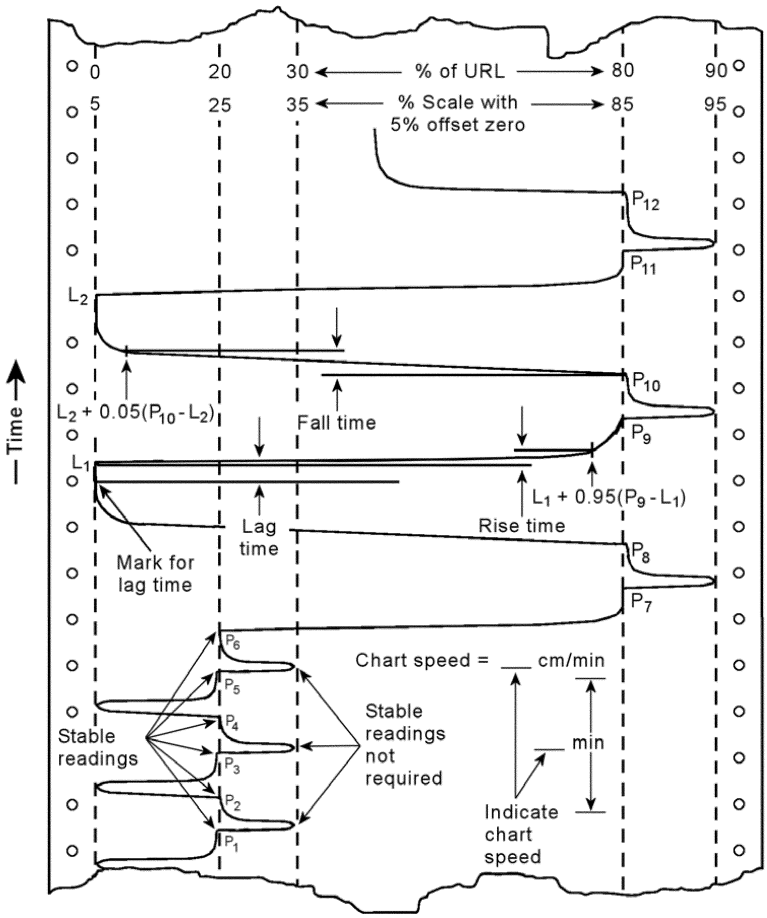

Figure B-1 to Subpart B of Part 53--Example showing the nature of the tracing obtained during the test sequence for 24-hour drift, lag time, rise time, fall time, and precision. The time scale has been greatly compressed.

TABLE B-1 TO SUBPART B OF PART 53—PERFORMANCE LIMIT SPECIFICATIONS FOR AUTOMATED METHODS

Performance parameter	Units[1]	SO_2		O_3 (Std. range)	CO		NO_2 (Std. range)	Definitions and test procedures
		Std. range[3]	Lower range[2,3]		Std. range[3]	Lower range[2,3]		
1. Range	ppm	0-0.5	<0.5	0-0.5	0-50	<50	0-0.5	Sec. 53.23(a).
2. Noise	ppm	0.001	0.0005	0.005	0.2	0.1	0.005	Sec. 53.23(b).
3. Lower detectable limit	ppm	0.002	0.001	0.010	0.4	0.2	0.010	Sec. 53.23(c).
4. Interference equivalent								
Each interferent	ppm	±0.005	[4]±0.005	±0.02	±1.0	±0.5	±0.02	Sec. 53.23(d).
Total, all interferents	ppm	---	---	0.06	---		0.04	Sec. 53.23(d).
5. Zero drift, 12 and 24 hour	ppm	±0.004	±0.002	±0.02	±0.5	±0.3	±0.02	Sec. 53.23(e).
6. Span drift, 24 hour								
20% of upper range limit	Percent	---	---	±20.0	---	---	±20.0	Sec. 53.23(e)
80% of upper range limit	Percent	±3.0	±3.0	±5.0	±2.0	±2.0	±5.0	Sec. 53.23(e).
7. Lag time	Minutes	2	2	20	2.0	2.0	20	Sec. 53.23(e).
8. Rise time	Minutes	2	2	15	2.0	2.0	15	Sec. 53.23(e).
9. Fall time	Minutes	2	2	15	2.0	2.0	15	Sec. 53.23(e).
10. Precision								
20 % of upper range limit	ppm	---	---	0.010	---	---	0.020	Sec. 53.23(e).
	Percent	2	2	---	1.0	1.0	---	Sec. 53.23(e).
80 % of upper range limit	ppm	---	---	0.010	---	---	0.030	Sec. 53.23(e).
	Percent	2	2	---	1.0	1.0	---	Sec. 53.23(e).

1. To convert from parts per million (ppm) to $\mu g/m^3$ at 25 °C and 760 mm Hg, multiply by M/0.02447, where M is the molecular weight of the gas. Percent means percent of the upper measurement range limit.
2. Tests for interference equivalent and lag time do not need to be repeated for any lower range provided the test for the standard range shows that the lower range specification (if applicable) is met for each of these test parameters.
3. For candidate analyzers having automatic or adaptive time constants or smoothing filters, describe their functional nature, and describe and conduct suitable tests to demonstrate their function aspects and verify that performances for calibration, noise, lag, rise, fall times, and precision are within specifications under all applicable conditions. For candidate analyzers with operator-selectable time constants or smoothing filters, conduct calibration, noise, lag, rise, fall times, and precision tests at the highest and lowest settings that are to be included in the FRM or FEM designation.
4. For nitric oxide interference for the SO_2 UVF method, interference equivalent is ±0.0003 ppm for the lower range.

BILLING CODE 6560–50–C

TABLE B–2 TO SUBPART B OF PART 53—TEST ATMOSPHERES

Test gas	Generation	Verification
Ammonia	Permeation device. Similar to system described in references 1 and 2.	Indophenol method, reference 3.
Carbon dioxide	Cylinder of zero air or nitrogen containing CO_2 as required to obtain the concentration specified in table B–3.	Use NIST-certified standards whenever possible. If NIST standards are not available, obtain 2 standards from independent sources which agree within 2 percent, or obtain one standard and submit it to an independent laboratory for analysis, which must agree within 2 percent of the supplier's nominal analysis.
Carbon monoxide	Cylinder of zero air or nitrogen containing CO as required to obtain the concentration specified in table B–3.	Use an FRM CO analyzer as described in reference 8.
Ethane	Cylinder of zero air or nitrogen containing ethane as required to obtain the concentration specified in table B–3.	Gas chromatography, ASTM D2820, reference 10. Use NIST-traceable gaseous methane or propane standards for calibration.
Ethylene	Cylinder of pre-purified nitrogen containing ethylene as required to obtain the concentration specified in table B–3.	Do.
Hydrogen chloride	Cylinder[1] of pre-purified nitrogen containing approximately 100 ppm of gaseous HCl. Dilute with zero air to concentration specified in table B–3.	Collect samples in bubbler containing distilled water and analyze by the mercuric thiocyanate method, ASTM (D612), p. 29, reference 4.
Hydrogen sulfide	Permeation device system described in references 1 and 2.	Tentative method of analysis for H_2S content of the atmosphere, p. 426, reference 5.
Methane	Cylinder of zero air containing methane as required to obtain the concentration specified in table B–3.	Gas chromatography ASTM D2820, reference 10. Use NIST-traceable methane standards for calibration.
Nitric oxide	Cylinder[1] of pre-purified nitrogen containing approximately 100 ppm NO. Dilute with zero air to required concentration.	Gas phase titration as described in reference 6, section 7.1.
Nitrogen dioxide	1. Gas phase titration as described in reference 6 2. Permeation device, similar to system described in reference 6.	1. Use an FRM NO_2 analyzer calibrated with a gravimetrically calibrated permeation device. 2. Use an FRM NO_2 analyzer calibrated by gas-phase titration as described in reference 6.
Ozone	Calibrated ozone generator as described in reference 9	Use an FEM ozone analyzer calibrated as described in reference 9.

TABLE B–2 TO SUBPART B OF PART 53—TEST ATMOSPHERES—Continued

Test gas	Generation	Verification
Sulfur dioxide	1. Permeation device as described in references 1 and 2 2. Dynamic dilution of a cylinder containing approximately 100 ppm SO_2 as described in Reference 7.	Use an SO_2 FRM or FEM analyzer as described in reference 7.
Water	Pass zero air through distilled water at a fixed known temperature between 20° and 30 °C such that the air stream becomes saturated. Dilute with zero air to concentration specified in table B–3.	Measure relative humidity by means of a dew-point indicator, calibrated electrolytic or piezo electric hygrometer, or wet/dry bulb thermometer.
Xylene	Cylinder of pre-purified nitrogen containing 100 ppm xylene. Dilute with zero air to concentration specified in table B–3.	Use NIST-certified standards whenever possible. If NIST standards are not available, obtain 2 standards from independent sources which agree within 2 percent, or obtain one standard and submit it to an independent laboratory for analysis, which must agree within 2 percent of the supplier's nominal analysis.
Zero air	1. Ambient air purified by appropriate scrubbers or other devices such that it is free of contaminants likely to cause a detectable response on the analyzer. 2. Cylinder of compressed zero air certified by the supplier or an independent laboratory to be free of contaminants likely to cause a detectable response on the analyzer.	

[1] Use stainless steel pressure regulator dedicated to the pollutant measured.

Reference 1. O'Keefe, A. E., and Ortaman, G. C. ''Primary Standards for Trace Gas Analysis,'' *Anal. Chem.* 38, 760 (1966).

Reference 2. Scaringelli, F. P., A. E. . Rosenberg, E*, and Bell, J. P., ''Primary Standards for Trace Gas Analysis.'' *Anal. Chem.* 42, 871 (1970).

Reference 3. ''Tentative Method of Analysis for Ammonia in the Atmosphere (Indophenol Method)'', *Health Lab Sciences,* vol. 10, No. 2, 115–118, April 1973.

Reference 4. 1973 Annual Book of ASTM Standards, American Society for Testing and Materials, 1916 Race St., Philadelphia, PA.

Reference 5. *Methods for Air Sampling and Analysis,* Intersociety Committee, 1972, American Public Health Association, 1015.

Reference 6. 40 CFR 50 Appendix F, ''Measurement Principle and Calibration Principle for the Measurement of Nitrogen Dioxide in the Atmosphere (Gas Phase Chemiluminescence).''

Reference 7. 40 CFR 50 Appendix A–1, ''Measurement Principle and Calibration Procedure for the Measurement of Sulfur Dioxide in the Atmosphere (Ultraviolet Fluorscence).''

Reference 8. 40 CFR 50 Appendix C, ''Measurement Principle and Calibration Procedure for the Measurement of Carbon Monoxide in the Atmosphere (Non-Dispersive Infrared Photometry)''.

Reference 9. 40 CFR 50 Appendix D, ''Measurement Principle and Calibration Procedure for the Measurement of Ozone in the Atmosphere''.

Reference 10. ''Standard Test Method for C, through C5 Hydrocarbons in the Atmosphere by Gas Chromatography'', D 2820, 1987 Annual Book of Aston Standards, vol 11.03, American Society for Testing and Materials, 1916 Race St., Philadelphia, PA 19103.

TABLE B–3 TO SUBPART B OF PART 53—INTERFERENT TEST CONCENTRATION,[1] PARTS PER MILLION

Pollutant	Analyzer type	Hydrochloric acid	Ammonia	Hydrogen sulfide	Sulfur dioxide	Nitrogen dioxide	Nitric oxide	Carbon dioxide	Ethylene	Ozone	Mxylene	Water vapor	Carbon monoxide	Methane	Ethane	Naphthalene
SO_2	Ultraviolet fluorescence			[5]0.1	[4]0.14	0.5	0.5			0.5	0.2	20,000				[6]0.05
SO_2	Flame photometric			0.01	[4]0.14			750				[3]20,000	50			
SO_2	Gas chromatography			0.1	[4]0.14			750				[3]20,000	50			
SO_2	Spectrophotometric-wet chemical (pararosanaline).	0.2	0.1	0.1	[4]0.14	0.5		750		0.5						
SO_2	Electrochemical	0.2	0.1	0.1	[4]0.14	0.5	0.5		0.2	0.5		[3]20,000				
SO_2	Conductivity	0.2	0.1		[4]0.14	0.5		750								
SO_2	Spectrophotometric-gas phase, including DOAS.				[4]0.14	0.5				0.5	0.2					
O_3	Chemiluminescent			[3]0.1				750		[4]0.08		[3]20,000				
O_3	Electrochemical		[3]0.1		0.5	0.5				[4]0.08						
O_3	Spectrophotometric-wet chemical (potassium iodide).		[3]0.1		0.5	0.5	[3]0.5			[4]0.08						
O_3	Spectrophotometric-gas phase, including ultraviolet absorption and DOAS).				0.5	0.5	0.5			[4]0.08	0.02	20,000				
CO	Non-dispersive Infrared							750				20,000	[4]10			
CO	Gas chromatography with flame ionization detector.											20,000	[4]10		0.5	
CO	Electrochemical						0.5		0.2			20,000	[4]10			
CO	Catalytic combustion-thermal detection.		0.1					750	0.2			20,000	[4]10	5.0	0.5	
CO	IR fluorescence							750				20,000	[4]10		0.5	
CO	Mercury replacement-UV photometric.								0.2				[4]10		0.5	
NO_2	Chemiluminescent		[3]0.1		0.5	[4]0.1	0.5					20,000				
NO_2	Spectrophotometric-wet chemical (azo-dye reaction).				0.5	[4]0.1	0.5	750		0.5						
NO_2	Electrochemical	0.2	[3]0.1		0.5	[4]0.1	0.5	750		0.5		20,000	50			
NO_2	Spectrophotometric-gas phase		[3]0.1		0.5	[4]0.1	0.5			0.5		20,000	50			

[1] Concentrations of interferent listed must be prepared and controlled to ±10 percent of the stated value.
[2] Analyzer types not listed will be considered by the Administrator as special cases.
[3] Do not mix with the pollutant.
[4] Concentration of pollutant used for test. These pollutant concentrations must be prepared to ±10 percent of the stated value.
[5] If candidate method utilizes an elevated-temperature scrubber for removal of aromatic hydrocarbons, perform this interference test.
[6] If naphthalene test concentration cannot be accurately quantified, remove the scrubber, use a test concentration that causes a full scale response, reattach the scrubber, and evaluate response for interference.

TABLE B–4 TO SUBPART B OF PART 53—LINE VOLTAGE AND ROOM TEMPERATURE TEST CONDITIONS

Test day	Line voltage,[1] rms	Room temperature,[2] °C	Comments
0	115	25	Initial set-up and adjustments.
1	125	20	
2	105	20	
3	125	30	Adjustments and/or periodic maintenance permitted at end of tests.
4	105	30	
5	125	20	
6	105	20	Adjustments and/or periodic maintenance permitted at end of tests.
7	125	30	Examine test results to ascertain if further testing is required.
8	105	30	
9	125	20	Adjustments and/or periodic maintenance permitted at end of tests.
10	105	20	
11	125	30	
12	105	30	Adjustments and/or periodic maintenance permitted at end of tests.
13	125	20	
14	105	20	
15	125	30	

[1] Voltage specified shall be controlled to ± 1 volt.
[2] Temperatures shall be controlled to ± 1 °C.

Table B–5 to Subpart B of Part 53—Symbols and Abbreviations

B_L—Analyzer reading at the specified *LDL* test concentration for the *LDL* test.
B_Z—analyzer reading at 0 concentration for the *LDL* test.
DM—Digital meter.
C_{max}—Maximum analyzer reading during the 12*ZD* test period.
C_{min}—Minimum analyzer reading during the 12*ZD* test period.
i—Subscript indicating the *i*-th quantity in a series.
IE—Interference equivalent.
L_1—First analyzer zero reading for the 24*ZD* test.
L_2—Second analyzer zero reading for the 24*ZD* test.
n—Subscript indicating the test day number.
P—Analyzer reading for the span drift and precision tests.
P_i—The *i*-th analyzer reading for the span drift and precision tests.
P_{20}—Precision at 20 percent of URL.
P_{80}—Precision at 80 percent of URL.
ppb—Parts per billion of pollutant gas (usually in air), by volume.
ppm—Parts per million of pollutant gas (usually in air), by volume.
R—Analyzer reading of pollutant alone for the *IE* test.
R_1—Analyzer reading with interferent added for the *IE* test.
r_i—the *i*-th analyzer or DM reading for the noise test.
S—Standard deviation of the noise test readings.
S_0—Noise value (*S*) measured at 0 concentration.
S_{80}—Noise value (*S*) measured at 80 percent of the URL.
S_n—Average of P_7 . . . P_{12} for the n-th test day of the SD test.
S'_n—Adjusted span reading on the *n*-th test day.
SD—Span drift
URL—Upper range limit of the analyzer's measurement range.
Z—Average of L_1 and L_2 readings for the 24ZD test.
Z_n—Average of L_1 and L_2 readings on the *n*-th test day for the 24ZD test.
Z'_n—Adjusted analyzer zero reading on the *n*-the test day for the 24ZD test.
ZD—Zero drift.
12*ZD*—12-hour zero drift.
24*ZD*—24-hour zero drift.

Appendix A to Subpart B of Part 53—Optional Forms for Reporting Test Results

BILLING CODE 6560–50–P

NOISE TEST DATA

Applicant _____ Date _____

Analyzer _____ Pollutant _____

Range _____ Test No. _____

READING NUMBER (i)	TIME	0% of URL		80% of URL	
		DM READING	r_i, ppm	DM READING	r_i, ppm
1					
2					
3					
4					
5					
6					
7					
8					
9					
10					
11					
12					
13					
14					
15					
16					
17					
18					
19					
20					
21					
22					
23					
24					
25					
STD. DEVIATION		S_0 =		S_{80} =	

Figure B-2. Form for noise test data (see §53.23(b)).

LDL and INTERFERENCE TEST DATA

Applicant _____ Date _____

Analyzer _____ Pollutant _____

TEST PARAMETER		READING or CALCULATION	TEST NUMBER														
			1	2	3	4	5	6	7	8	9	10	11	12	13	14	15
LOWER DETECTABLE LIMIT		B_Z															
		B_L															
		$LDL = B_L$ □ B_Z															
INTER-FERENCE EQUIV-ALENT	1	R_1															
		R_{I1}															
		$IE = R_{I1} - R_1$															
	2	R_2															
		R_{I2}															
		$IE = R_{I2} - R_2$															
	3*	R_3															
		R_{I3}															
		$IE = R_{I3} - R_3$															
	4*	R_4															
		R_{I4}															
		$IE = R_{I4} - R_4$															
	5*	R_5															
		R_{I5}															
		$IE = R_{I5} - R_5$															
	TOTAL*	$\sum_{i=1}^{n} \lvert IE_i \rvert$															

*If required.

Figure B-3. Form for test data and calculations for lower detectable limit (LDL) and interference equivalent (IE) (see § 53.23(c) and (d)).

DRIFT AND PRECISION TEST DATA

Applicant _____ Date _____

Analyzer _____ Pollutant _____

	ANALYZER READING, ppm															
TEST DAY	0	1	2	3	4	5	6	7	8	9	10	11	12	13	14	15
DATE																
P_1																
P_2																
P_3																
P_4																
P_5																
P_6																
P_7																
P_8																
P_9																
P_{10}																
P_{11}																
P_{12}																
$S_n = \frac{1}{6}\sum_{i=7}^{12} P_i$																
L_1																
L_2																
Z'_n																
S'_n																
C_{max}																
C_{min}																

Figure B-4. Form for drift and precision test data (see § 53.23(e)).

CALCULATION OF ZERO DRIFT, SPAN DRIFT, AND PRECISION

Applicant _____ Date _____

Analyzer _____ Pollutant _____

TEST PARAMETER		CALCULATION	TEST DAY (n)														
			1	2	3	4	5	6	7	8	9	10	11	12	13	14	15
ZERO DRIFT	12 HOUR	$12ZD = C_{max} - C_{min}$															
	24 HOUR	$Z = (L_1 + L_2)/2$															
		$24ZD = Z_n - Z_{n-1}$															
		$24ZD = Z'_n - Z'_{n-1}$															
SPAN DRIFT	24 HOUR	$S_n = \frac{1}{6}\sum_{i=7}^{12} P_i$															
		$SD_n = \frac{S_n - S_{n-1}}{S_{n-1}} \times 100\%$															
		$SD_n = \frac{S_n - S'_{n-1}}{S'_{n-1}} \times 100\%$															
PREC-ISION	20% URL (P_{20})	P_{20} = STANDARD DEVIATION of ($P_1 \ldots P_6$)															
	80% URL (P_{80})	P_{80} = STANDARD DEVIATION of ($P_7 \ldots P_{12}$)															

Figure B-5. Form for calculating zero drift, span drift, and precision (§ 53.23(e)).

TEST DATA SUMMARY

Applicant _____ Analyst _____

Analyzer _____ Pollutant _____

Range _____ Other information _____
Test dates _____

Performance Parameter		Table B-1 Spec.	Test Number (first set)							Test Number (second set)								Number of Failures	Pass or Fail
			1	2	3	4	5	6	7	8	9	10	11	12	13	14	15		
Noise, ppm	0% URL																		
	80% URL																		
LDL (> 2 x 0% noise)																			
Interference Equivalent, ppm	IE1																		
	IE2																		
	IE3																		
	IE4																		
	IE5																		
	IE6																		
	Total																		
Zero Drift, ppm	12 hr																		
	24 hr.																		
Span Drift, %	80% URL																		
Lag Time, min																			
Rise Time, min																			
Fall Time, min																			
Precision, percent	20% URL																		
	80% URL																		

Figure B-6. Form for reporting a summary of the test results (see § 53.23).

BILLING CODE 6560–50–C

PART 58—AMBIENT AIR QUALITY SURVEILLANCE

■ 5. The authority citation for part 58 continues to read as follows:

Authority: 42 U.S.C. 7403, 7410, 7601(a), 7611, and 7619.

Subpart B—[Amended]

■ 6. Section 58.10, is amended by adding paragraph (a)(7) to read as follows:

§ 58.10 Annual monitoring network plan and periodic network assessment.

(a) * * *

(7) A plan for establishing CO monitoring sites in accordance with the requirements of appendix D to this part shall be submitted to the EPA Regional Administrator. Plans for required CO monitors shall be submitted at least six months prior to the date such monitors must be established as required by section 58.13.

* * * * *

■ 7. Section 58.13 is amended by adding paragraph (e) to read as follows:

§ 58.13 Monitoring network completion.

* * * * *

(e) The CO monitors required under Appendix D, section 4.2 of this part must be physically established and operating under all of the requirements of this part, including the requirements of appendices A, C, D, and E to this part, no later than:

(1) January 1, 2015 for CO monitors in CBSAs having 2.5 million persons or more; or

(2) January 1, 2017 for other CO monitors.

■ 8. Appendix D to Part 58 is amended by revising section 4.2 to read as follows:

Appendix D to Part 58—Network Design Criteria for Ambient Air Quality Monitoring

* * * * *

4.2 Carbon Monoxide (CO) Design Criteria

4.2.1 General Requirements. (a) Except as provided in subsection (b), one CO monitor is required to operate collocated with one required near-road NO_2 monitor, as required in Section 4.3.2 of this part, in CBSAs having a population of 1,000,000 or more persons. If a CBSA has more than one required near-road NO_2 monitor, only one CO monitor is required to be collocated with a near-road NO_2 monitor within that CBSA.

(b) If a state provides quantitative evidence demonstrating that peak ambient CO concentrations would occur in a near-road location which meets microscale siting criteria in Appendix E of this part but is not a near-road NO_2 monitoring site, then the EPA Regional Administrator may approve a request by a state to use such an alternate near-road location for a CO monitor in place of collocating a monitor at near-road NO_2 monitoring site.

4.2.2 Regional Administrator Required Monitoring. (a) The Regional Administrators, in collaboration with states, may require additional CO monitors above the minimum number of monitors required in 4.2.1 of this part, where the minimum monitoring requirements are not sufficient to meet monitoring objectives. The Regional Administrator may require, at his/her discretion, additional monitors in situations where data or other information suggest that CO concentrations may be approaching or exceeding the NAAQS. Such situations include, but are not limited to, (1) characterizing impacts on ground-level concentrations due to stationary CO sources, (2) characterizing CO concentrations in downtown areas or urban street canyons, and (3) characterizing CO concentrations in areas that are subject to high ground level CO concentrations particularly due to or enhanced by topographical and meteorological impacts. The Regional Administrator and the responsible State or local air monitoring agency shall work together to design and maintain the most appropriate CO network to address the data needs for an area, and include all monitors under this provision in the annual monitoring network plan.

4.2.3 CO Monitoring Spatial Scales. (a) Microscale and middle scale measurements are the most useful site classifications for CO monitoring sites since most people have the potential for exposure on these scales. Carbon monoxide maxima occur primarily in areas near major roadways and intersections with high traffic density and often in areas with poor atmospheric ventilation.

(1) *Microscale*—Microscale measurements typically represent areas in close proximity to major roadways, within street canyons, over sidewalks, and in some cases, point and area sources. Emissions on roadways result in high ground level CO concentrations at the microscale, where concentration gradients generally exhibit a marked decrease with increasing downwind distance from major roads, or within downtown areas including urban street canyons. Emissions from stationary point and area sources, and non-road sources may, under certain plume conditions, result in high ground level concentrations at the microscale.

(2) *Middle scale*—Middle scale measurements are intended to represent areas with dimensions from 100 meters to 0.5 kilometer. In certain cases, middle scale measurements may apply to areas that have a total length of several kilometers, such as ''line'' emission source areas. This type of emission sources areas would include air quality along a commercially developed street or shopping plaza, freeway corridors, parking lots and feeder streets.

(3) *Neighborhood scale*—Neighborhood scale measurements are intended to represent areas with dimensions from 0.5 kilometers to 4 kilometers. Measurements of CO in this category would represent conditions throughout some reasonably urban sub-regions. In some cases, neighborhood scale data may represent not only the immediate neighborhood spatial area, but also other similar such areas across the larger urban area. Neighborhood scale measurements provide relative area-wide concentration data which are useful for providing relative urban background concentrations, supporting health and scientific research, and for use in modeling.

* * * * *

■ 9. Appendix E to Part 58 is amended by revising sections 2 and 6.2(a), 6.2(b), 6.2(c), and Table E–4 to read as follows:

Appendix E to Part 58—Probe and Monitoring Path Siting Criteria for Ambient Air Quality Monitoring

* * * * *

2. Horizontal and Vertical Placement

The probe or at least 80 percent of the monitoring path must be located between 2 and 15 meters above ground level for all O_3 and SO_2 monitoring sites, and for neighborhood or larger spatial scale Pb, PM_{10}, $PM_{10-2.5}$, $PM_{2.5}$, NO_2, and CO sites. Middle scale $PM_{10-2.5}$ sites are required to have sampler inlets between 2 and 7 meters above ground level. Microscale Pb, PM_{10}, $PM_{10-2.5}$, and $PM_{2.5}$ sites are required to have sampler inlets between 2 and 7 meters above ground level. Microscale near-road NO_2 monitoring sites are required to have sampler inlets between 2 and 7 meters above ground level. The inlet probes for microscale carbon monoxide monitors that are being used to measure concentrations near roadways must be between 2 and 7 meters above ground level. Those inlet probes for microscale carbon monoxide monitors measuring concentrations near roadways in downtown areas or urban street canyons must be between 2.5 and 3.5 meters above ground level. The probe or at least 90 percent of the monitoring path must be at least 1 meter vertically or horizontally away from any supporting structure, walls, parapets, penthouses, *etc.,* and away from dusty or dirty areas. If the probe or a significant portion of the monitoring path is located near the side of a building or wall, then it should be located on the windward side of the building relative to the prevailing wind direction during the season of highest concentration potential for the pollutant being measured.

* * * * *

6. * * *

6.2 Spacing for Carbon Monoxide Probes and Monitoring Paths. (a) Near-road microscale CO monitoring sites, including those located in downtown areas, urban street canyons, and other near-road locations such as those adjacent to highly trafficked roads, are intended to provide a measurement of the influence of the immediate source on the pollution exposure on the adjacent area.

(b) Microscale CO monitor inlets probes in downtown areas or urban street canyon locations shall be located a minimum distance of 2 meters and a maximum distance of 10 meters from the edge of the nearest traffic lane.

(c) Microscale CO monitor inlet probes in downtown areas or urban street canyon locations shall be located at least 10 meters from an intersection and preferably at a midblock location. Midblock locations are preferable to intersection locations because intersections represent a much smaller portion of downtown space than do the streets between them. Pedestrian exposure is probably also greater in street canyon/corridors than at intersections.

(d) Microscale CO monitor inlet probes in the near-road environment, outside of downtown areas or urban street canyons, shall be as near as practicable to the outside nearest edge of the traffic lanes of the target road segment; but shall not be located at a distance greater than 50 meters, in the horizontal, from the outside nearest edge of the traffic lanes of the target road segment.

(e) In determining the minimum separation between a neighborhood scale monitoring site and a specific roadway, the presumption is made that measurements should not be substantially influenced by any one roadway. Computations were made to determine the separation distance, and Table E–2 of this appendix provides the required minimum separation distance between roadways and a probe or 90 percent of a monitoring path. Probes or monitoring paths that are located closer to roads than this criterion allows should not be classified as neighborhood scale, since the measurements from such a site would closely represent the middle scale. Therefore, sites not meeting this criterion should be classified as middle scale.

* * * * *

TABLE E–4 OF APPENDIX E TO PART 58—SUMMARY OF PROBE AND MONITORING PATH SITING CRITERIA

Pollutant	Scale (maximum monitoring path length, meters) [1]	Height from ground to probe, inlet or 80% of monitoring path [1]	Horizontal and vertical distance from supporting structures [2] to probe, inlet or 90% of monitoring path [1] (meters)	Distance from trees to probe, inlet or 90% of monitoring path [1] (meters)	Distance from roadways to probe, inlet or monitoring path [1] (meters)
SO_2 [3 4 5 6]	Middle (300 m) Neighborhood Urban, and Regional (1 km).	2–15	> 1	> 10	N/A.
CO [4 5 7]	Micro [downtown or street canyon sites], micro [near-road sites], middle (300 m) and Neighborhood (1 km).	2.5–3.5; 2–7; 2–15.	> 1	> 10	2–10 for downtown areas or street canyon microscale; 50 for near-road microscale; see Table E–2 of this appendix for middle and neighborhood scales.
O_3 [3 4 5]	Middle (300 m) Neighborhood, Urban, and Regional (1 km).	2–15	> 1	> 10	See Table E–1 of this appendix for all scales.
NO_2 [3 4 5]	Micro (Near-road [50–300]) Middle (300m) Neighborhood, Urban, and Regional (1 km).	2–7 (micro); 2–15 (all other scales).	> 1	> 10	50 meters for near-road microscale; See Table E–1 of this appendix for all other scales.
Ozone precursors (for PAMS) [3 4 5]	Neighborhood and Urban (1 km).	2–15	> 1	> 10	See Table E–4 of this appendix for all scales.
PM, Pb [3 4 5 6 8]	Micro: Middle, Neighborhood, Urban and Regional.	2–7 (micro); 2–7 (middle $PM_{10-2.5}$); 2–15 (all other scales).	> 2 (all scales, horizontal distance only).	> 10 (all scales)	2–10 (micro); see Figure E–1 of this appendix for all other scales.

N/A—Not applicable.

[1] Monitoring path for open path analyzers is applicable only to middle or neighborhood scale CO monitoring, middle, neighborhood, urban, and regional scale NO_2 monitoring, and all applicable scales for monitoring SO_2,O_3, and O_3 precursors.

[2] When probe is located on a rooftop, this separation distance is in reference to walls, parapets, or penthouses located on roof.

[3] Should be > 20 meters from the drip-line of tree(s) and must be 10 meters from the drip-line when the tree(s) act as an obstruction.

[4] Distance from sampler, probe, or 90% of monitoring path to obstacle, such as a building, must be at least twice the height the obstacle protrudes above the sampler, probe, or monitoring path. Sites not meeting this criterion may be classified as middle scale (see text).

[5] Must have unrestricted airflow 270 degrees around the probe or sampler; 180 degrees if the probe is on the side of a building or a wall.

[6] The probe, sampler, or monitoring path should be away from minor sources, such as furnace or incineration flues. The separation distance is dependent on the height of the minor source's emission point (such as a flue), the type of fuel or waste burned, and the quality of the fuel (sulfur, ash, or lead content). This criterion is designed to avoid undue influences from minor sources.

[7] For microscale CO monitoring sites in downtown areas or street canyons (not at near-road NO_2 monitoring sites), the probe must be > 10 meters from a street intersection and preferably at a midblock location.

[8] Collocated monitors must be within 4 meters of each other and at least 2 meters apart for flow rates greater than 200 liters/min or at least 1 meter apart for samplers having flow rates less than 200 liters/min to preclude airflow interference.

* * * * *

[FR Doc. 2011–21359 Filed 8–30–11; 8:45 am]

BILLING CODE 6560–50–P