AUTHENTICATED
U.S. GOVERNMENT
INFORMATION
GPO

FEDERAL REGISTER

Vol. 76 Thursday,
No. 218 November 10, 2011

Pages 70037–70320

OFFICE OF THE FEDERAL REGISTER

The **FEDERAL REGISTER** (ISSN 0097–6326) is published daily, Monday through Friday, except official holidays, by the Office of the Federal Register, National Archives and Records Administration, Washington, DC 20408, under the Federal Register Act (44 U.S.C. Ch. 15) and the regulations of the Administrative Committee of the Federal Register (1 CFR Ch. I). The Superintendent of Documents, U.S. Government Printing Office, Washington, DC 20402 is the exclusive distributor of the official edition. Periodicals postage is paid at Washington, DC.

The **FEDERAL REGISTER** provides a uniform system for making available to the public regulations and legal notices issued by Federal agencies. These include Presidential proclamations and Executive Orders, Federal agency documents having general applicability and legal effect, documents required to be published by act of Congress, and other Federal agency documents of public interest.

Documents are on file for public inspection in the Office of the Federal Register the day before they are published, unless the issuing agency requests earlier filing. For a list of documents currently on file for public inspection, see *www.ofr.gov.*

The seal of the National Archives and Records Administration authenticates the Federal Register as the official serial publication established under the Federal Register Act. Under 44 U.S.C. 1507, the contents of the **Federal Register** shall be judicially noticed.

The **Federal Register** is published in paper and on 24x microfiche. It is also available online at no charge at *www.fdsys.gov*, a service of the U.S. Government Printing Office.

The online edition of the **Federal Register** is issued under the authority of the Administrative Committee of the Federal Register as the official legal equivalent of the paper and microfiche editions (44 U.S.C. 4101 and 1 CFR 5.10). It is updated by 6:00 a.m. each day the **Federal Register** is published and includes both text and graphics from Volume 59, 1 (January 2, 1994) forward. For more information, contact the GPO Customer Contact Center, U.S. Government Printing Office. Phone 202-512-1800 or 866-512-1800 (toll free). E-mail, *gpo@custhelp.com.*

The annual subscription price for the **Federal Register** paper edition is $749 plus postage, or $808, plus postage, for a combined **Federal Register, Federal Register** Index and List of CFR Sections Affected (LSA) subscription; the microfiche edition of the **Federal Register** including the **Federal Register** Index and LSA is $165, plus postage. Six month subscriptions are available for one-half the annual rate. The prevailing postal rates will be applied to orders according to the delivery method requested. The price of a single copy of the daily **Federal Register,** including postage, is based on the number of pages: $11 for an issue containing less than 200 pages; $22 for an issue containing 200 to 400 pages; and $33 for an issue containing more than 400 pages. Single issues of the microfiche edition may be purchased for $3 per copy, including postage. Remit check or money order, made payable to the Superintendent of Documents, or charge to your GPO Deposit Account, VISA, MasterCard, American Express, or Discover. Mail to: U.S. Government Printing Office—New Orders, P.O. Box 979050, St. Louis, MO 63197-9000; or call toll free 1-866-512-1800, DC area 202-512-1800; or go to the U.S. Government Online Bookstore site, see *bookstore.gpo.gov.*

There are no restrictions on the republication of material appearing in the **Federal Register.**

How To Cite This Publication: Use the volume number and the page number. Example: 76 FR 12345.

Postmaster: Send address changes to the Superintendent of Documents, Federal Register, U.S. Government Printing Office, Washington, DC 20402, along with the entire mailing label from the last issue received.

SUBSCRIPTIONS AND COPIES

PUBLIC

Subscriptions:

Paper or fiche	**202–512–1800**
Assistance with public subscriptions	**202–512–1806**

General online information **202–512–1530; 1–888–293–6498**

Single copies/back copies:

Paper or fiche	**202–512–1800**
Assistance with public single copies	**1–866–512–1800 (Toll-Free)**

FEDERAL AGENCIES

Subscriptions:

Paper or fiche	**202–741–6005**
Assistance with Federal agency subscriptions	**202–741–6005**

Printed on recycled paper.

Contents

Federal Register

Vol. 76, No. 218

Thursday, November 10, 2011

Agriculture Department
See Animal and Plant Health Inspection Service
See National Agricultural Statistics Service
NOTICES
Agency Information Collection Activities; Proposals, Submissions, and Approvals, 70107–70108

Animal and Plant Health Inspection Service
RULES
Importation of Live Swine, Swine Semen, Pork, and Pork Products from Liechtenstein and Switzerland, 70037–70040

Arts and Humanities, National Foundation
See National Foundation on the Arts and the Humanities

Bureau of Ocean Energy Management, Regulation and Enforcement

NOTICES
Draft Programmatic Environmental Impact Study:
Five-Year Outer Continental Shelf Oil and Gas Leasing Program for 2012–2017, 70156
Five-Year Outer Continental Shelf Oil and Gas Leasing Program for 2012–2017, 70156–70160

Centers for Medicare & Medicaid Services
RULES
Medicare Programs:
End-Stage Renal Disease Prospective Payment System and Quality Incentive Program; Ambulance Fee Schedule; Durable Medical Equipment; and Competitive Acquisition of Certain Durable Medical Equipment, Prosthetics, Orthotics and Supplies, 70228–70316
NOTICES
Agency Information Collection Activities; Proposals, Submissions, and Approvals, 70148

Children and Families Administration
NOTICES
Statements of Organization, Functions, and Delegations of Authority:
Office of Refugee Resettlement, 70149–70150

Civil Rights Commission
NOTICES
Meetings:
Colorado Advisory Committee, 70109

Coast Guard
RULES
Lifesaving Equipment:
Production Testing and Harmonization with International Standards, 70062

Commerce Department
See Foreign-Trade Zones Board
See Industry and Security Bureau
See International Trade Administration
See National Oceanic and Atmospheric Administration
NOTICES
Agency Information Collection Activities; Proposals, Submissions, and Approvals, 70109–70110

Consumer Product Safety Commission
NOTICES
Meetings; Sunshine Act, 70117

Defense Acquisition Regulations System
PROPOSED RULES
Defense Federal Acquisition Regulation Supplements:
Safeguarding Unclassified DoD Information; Meeting Cancellation, 70106

Defense Department
See Defense Acquisition Regulations System
See Navy Department
NOTICES
Intents to Grant Exclusive Licenses:
Voltage Networking, LLC, 70117–70118

Department of Transportation
See Pipeline and Hazardous Materials Safety Administration

Education Department
NOTICES
Agency Information Collection Activities; Proposals, Submissions, and Approvals, 70120

Energy Department
See Energy Information Administration
See Western Area Power Administration
NOTICES
Meetings:
Environmental Management Site-Specific Advisory Board, Northern New Mexico, 70120–70121
Environmental Management Site-Specific Advisory Board, Portsmouth, 70121
Plan for Conduct of 2012 Electric Transmission Congestion Study, 70122–70123

Energy Information Administration
NOTICES
Agency Information Collection Activities; Proposals, Submissions, and Approvals, 70123–70125

Environmental Protection Agency
RULES
National Oil and Hazardous Substance Pollution Contingency Plans; National Priorities List:
Partial Deletion of Tar Lake Superfund Site, 70057–70061
PROPOSED RULES
Approvals and Promulgations of Implementation Plans and Designations of Areas for Air Quality Planning Purposes:
Alabama; Redesignation of Birmingham 1997 Annual Fine Particulate Matter Nonattainment Area to Attainment, 70078–70091
Alabama; Redesignation of Birmingham 2006 24-Hour Fine Particulate Matter Nonattainment Area to Attainment, 70091–70105

National Oil and Hazardous Substance Pollution Contingency Plans; National Priorities List:
Partial Deletion of Tar Lake Superfund Site, 70105–70106
NOTICES
Agency Information Collection Activities; Proposals, Submissions, and Approvals:
NSPS for Municipal Waste Combustors (Renewal), 70127–70128
California State Motor Vehicle Pollution Control Standards:
Amendments to the California Heavy-Duty Engine On-Board Diagnostic Regulation; Waiver Request, 70128–70130
Environmental Impact Statements; Availability, etc.:
Weekly Receipt, 70130
Meetings:
Interagency Steering Committee on Radiation Standards, 70130–70131
Senior Executive Service Performance Review Board Membership, 70131

Equal Employment Opportunity Commission
NOTICES
Meetings; Sunshine Act, 70131–70132

Executive Office of the President
See Management and Budget Office
See Presidential Documents
See Science and Technology Policy Office

Federal Aviation Administration
RULES
Airworthiness Directives:
ATR – GIE Avions de Transport Regional Airplanes, 70044–70046
Eurocopter France Model AS350B, B1, B2, B3, BA, C, D, and D1; and AS355E, F, F1, F2, N, and NP Helicopters, 70046–70051
Gulfstream Aerospace LP (Type Certificate Previously Held by Israel Aircraft Industries, Ltd.) Airplanes, 70040–70042
Pacific Aerospace Limited Airplanes, 70042–70044
Establishments of Class D and Amendments of Class E Airspace:
Los Angeles, CA, 70051–70053
Standard Instrument Approach Procedures, and Takeoff Minimums and Obstacle Departure Procedures, 70053–70056

Federal Deposit Insurance Corporation
NOTICES
Meetings; Sunshine Act, 70132

Federal Election Commission
NOTICES
Meetings; Sunshine Act, 70132

Federal Housing Finance Agency
PROPOSED RULES
Federal Home Loan Bank Community Support Amendments, 70069–70075
NOTICES
Federal Home Loan Bank Members Selected for Community Support Review, 70132–70145

Federal Maritime Commission
NOTICES
Ocean Transportation Intermediary Licenses:
Applicants, 70145–70146
Reissuance, 70145
Revocation, 70145

Federal Motor Carrier Safety Administration
NOTICES
Qualifications of Drivers:
Exemption Applications; Vision, 70210–70216

Federal Reserve System
NOTICES
Agency Information Collection Activities; Proposals, Submissions, and Approvals, 70146–70147

Fish and Wildlife Service
NOTICES
Endangered Species Recovery Permit Applications, 70160–70162

Food and Drug Administration
NOTICES
Draft Guidance for Industry and Staff; Availability:
Investigational Device Exemptions for Early Feasibility Medical Device Clinical Studies, Including Certain First in Human Studies, 70150–70151
Draft Guidance for Industry, Clinical Investigators, Institutional Review Boards, and Staff; Availability:
Decisions for Investigational Device Exemption Clinical Investigations, 70151–70152
Pilot Program for Early Feasibility Study Investigational Device Exemption Applications, 70152–70154

Foreign-Trade Zones Board
NOTICES
Applications for Reorganization and Expansion under Alternative Site Framework:
Foreign-Trade Zone 109, County of Jefferson, NY, 70110

Health and Human Services Department
See Centers for Medicare & Medicaid Services
See Children and Families Administration
See Food and Drug Administration
See National Institutes of Health
NOTICES
Determinations Concerning Petitions to Add Class of Employees to Special Exposure Cohort, 70147–70148

Homeland Security Department
See Coast Guard

Housing and Urban Development Department
NOTICES
Federal Properties Suitable as Facilities to Assist Homeless, 70155–70156

Industry and Security Bureau
NOTICES
Agency Information Collection Activities; Proposals, Submissions, and Approvals:
Miscellaneous Short Supply Activities, 70110–70111
Request for Investigation Under Section 232 of the Trade Expansion Act, 70111

Interior Department
See Bureau of Ocean Energy Management, Regulation and Enforcement
See Fish and Wildlife Service
See Land Management Bureau

Internal Revenue Service
RULES
Extending Religious and Family Member FICA and FUTA Exceptions to Disregarded Entities:
Correction, 70057
NOTICES
Meetings:
Advisory Council to the Internal Revenue Service, 70225

International Trade Administration
NOTICES
Antidumping Duty Administrative Reviews; Results, Amendments, Extensions, etc.:
Certain Frozen Fish Fillets from the Socialist Republic of Vietnam, 70111–70112
Certain Preserved Mushrooms from the People's Republic of China, 70112–70113
Executive-Led Medical Trade Missions to India; Mumbai, New Delhi and Hyderabad March 2–8, 2012, 70113–70116

International Trade Commission
NOTICES
Complaints:
Certain Devices with Secure Communication Capabilities, etc., 70164

Justice Department
See Justice Programs Office
NOTICES
Lodgings of Consent Decrees under CERCLA, 70164–70165

Justice Programs Office
NOTICES
Ballistic-Resistant Body Armor Standard Workshop, 70165

Labor Department
See Labor Statistics Bureau
See Mine Safety and Health Administration
See Occupational Safety and Health Administration

Labor Statistics Bureau
NOTICES
Agency Information Collection Activities; Proposals, Submissions, and Approvals, 70165–70166

Land Management Bureau
NOTICES
Environmental Assessments; Availability, etc.:
Land Use Plan Amendment to Provide for a Proposed Direct Land Sale in Blaine County, ID, 70162–70163
Filings of Plats of Surveys:
Montana, 70163
Meetings:
BLM–Alaska Resource Advisory Council; Correction, 70163
Eastern Montana Resource Advisory Council, 70163–70164

Management and Budget Office
RULES
OMB Circulars, OFPP Policy Letters, and CASB Cost Accounting Standards Included in Semiannual Agenda of Federal Activities; Withdrawal, 70037

Maritime Administration
NOTICES
Administrative Waivers of Coastwise Trade Laws:
Vessel REEL ATTITUDE, 70216–70217

Mine Safety and Health Administration
PROPOSED RULES
Proximity Detection Systems for Continuous Mining Machines in Underground Coal Mines, 70075–70076

National Agricultural Statistics Service
NOTICES
Agency Information Collection Activities; Proposals, Submissions, and Approvals, 70108–70109

National Foundation on the Arts and the Humanities
NOTICES
Meetings:
Humanities Panel, 70168

National Institutes of Health
NOTICES
Meetings:
Advisory Committee to Director, 70155
National Cancer Institute, 70154–70155
National Heart, Lung, and Blood Institute, 70154
National Institute of Allergy and Infectious Diseases, 70155
National Institute of General Medical Sciences, 70155

National Oceanic and Atmospheric Administration
RULES
Atlantic Highly Migratory Species:
Update to Information on Effective Date of Smoothhound Shark Fishery Management Measures, 70064–70066
Fraser River Sockeye and Pink Salmon Fisheries; Inseason Orders, 70062–70064
NOTICES
Meetings:
National Climate Assessment and Development Advisory Committee; Time Changes, 70116–70117

National Science Foundation
NOTICES
Meetings; Sunshine Act, 70168

National Transportation Safety Board
NOTICES
SES Performance Review Board Members, 70169

Navy Department
NOTICES
Environmental Impact Statements; Availability, etc.:
Basing of MV–22 and H–1 Aircraft in Support of III Marine Expeditionary Force Elements in Hawaii, 70118–70120

Nuclear Regulatory Commission
PROPOSED RULES
Environmental Impacts of Severe Reactor and Spent Fuel Pool Accidents, 70067–70069
NOTICES
Final Environmental Statements:
Operation of Watts Bar Nuclear Plant, Unit 2, Tennessee Valley Authority, 70169–70170
Proposed Alternative Soils Standards for Uravan, CO Uranium Mill, 70170–70173

Occupational Safety and Health Administration
NOTICES
Agency Information Collection Activities; Proposals, Submissions, and Approvals:
Electrical Standards for Construction and General Industry, 70166–70168

Office of Management and Budget
See Management and Budget Office

Pipeline and Hazardous Materials Safety Administration
NOTICES
Agency Information Collection Activities; Proposals, Submissions, and Approvals, 70217–70220
Determinations:
New Jersey Regulations on Transportation of Regulated Medical Waste, 70220–70223

Postal Regulatory Commission
NOTICES
Post Office Closings, 70173–70176

Presidential Documents
ADMINISTRATIVE ORDERS
Weapons of Mass Destruction; Continuation of National Emergency (Notice of November 9, 2011), 70317–70319

Science and Technology Policy Office
NOTICES
Requests for Information:
Public Access to Digital Data Resulting from Federally Funded Scientific Research; Correction, 70176–70178

Securities and Exchange Commission
NOTICES
Cancellations of Registrations:
Creative Investment Research, Inc., 70178
Self-Regulatory Organizations; Proposed Rule Changes:
BATS Exchange, Inc., 70192–70195
Chicago Board Options Exchange, Inc., 70198–70199
EDGA Exchange, Inc., 70183–70184, 70202–70204
EDGX Exchange, Inc., 70204–70206
Financial Industry Regulatory Authority, Inc., 70190–70192, 70195–70198
ICE Clear Credit LLC, 70206–70207
International Securities Exchange, LLC, 70178–70183
Municipal Securities Rulemaking Board, 70207–70209
NASDAQ OMX BX, Inc., 70184–70187
NASDAQ OMX PHLX LLC, 70187–70190
NASDAQ Stock Market LLC, 70199–70202

State Department
NOTICES
Delegations of Authority, 70209

Statistical Reporting Service
See National Agricultural Statistics Service

Surface Transportation Board
NOTICES
Abandonment Exemptions:
CSX Transportation, Inc, Monroe County, AL, 70223
Operation Exemptions:
Saratoga and North Creek Railway, LLC for Tahawus Line, 70223–70224

Transportation Department
See Federal Aviation Administration
See Federal Motor Carrier Safety Administration
See Maritime Administration
See Pipeline and Hazardous Materials Safety Administration
See Surface Transportation Board
NOTICES
Agency Information Collection Activities; Proposals, Submissions, and Approvals:
New Requirements and Procedures for Grant Payment Request Submission, 70209–70210
Applications for Certificates of Public Convenience and Necessity and Foreign Air Carrier Permits, 70210

Treasury Department
See Internal Revenue Service
NOTICES
Agency Information Collection Activities; Proposals, Submissions, and Approvals, 70224–70225

Veterans Affairs Department
PROPOSED RULES
Required Assessment Tool for State Nursing Homes:
Technical Revisions to Update Reference, 70076–70078

Western Area Power Administration
NOTICES
Environmental Impact Statements; Availability, etc.:
Proposed Solar Reserve LLC Quartzsite Solar Energy Project, La Paz County, AZ, etc., 70125–70127

Separate Parts In This Issue

Part II
Health and Human Services Department, Centers for Medicare & Medicaid Services, 70228–70316

Part III
Presidential Documents, 70317–70319

Reader Aids
Consult the Reader Aids section at the end of this page for phone numbers, online resources, finding aids, reminders, and notice of recently enacted public laws.

To subscribe to the Federal Register Table of Contents LISTSERV electronic mailing list, go to http://listserv.access.gpo.gov and select Online mailing list archives, FEDREGTOC-L, Join or leave the list (or change settings); then follow the instructions.

CFR PARTS AFFECTED IN THIS ISSUE

A cumulative list of the parts affected this month can be found in the Reader Aids section at the end of this issue.

3 CFR

Adminstrative Orders:

Notices:

Notice of November 9, 2011 70319

5 CFR

Ch. III 70037

9 CFR

93 70037

94 70037

98 70037

10 CFR

Proposed Rules:

51 70067

12 CFR

Proposed Rules:

1290 70069

14 CFR

39 (4 documents) 70040, 70042, 70044, 70046

71 70051

97 (2 documents) 70053, 70055

26 CFR

301 70057

30 CFR

Proposed Rules:

75 70075

38 CFR

Proposed Rules:

51 70076

40 CFR

300 70057

Proposed Rules:

52 (2 documents) 70078, 70091

81 (2 documents) 70078, 70091

300 70105

42 CFR

413 70228

414 70228

46 CFR

160 70062

180 70062

199 70062

48 CFR

Ch. 1 70037

Proposed Rules:

204 70106

252 70106

50 CFR

300 70062

635 70064

Rules and Regulations

Federal Register

Vol. 76, No. 218

Thursday, November 10, 2011

This section of the FEDERAL REGISTER contains regulatory documents having general applicability and legal effect, most of which are keyed to and codified in the Code of Federal Regulations, which is published under 50 titles pursuant to 44 U.S.C. 1510.

The Code of Federal Regulations is sold by the Superintendent of Documents. Prices of new books are listed in the first FEDERAL REGISTER issue of each week.

OFFICE OF MANAGEMENT AND BUDGET

5 CFR Chapter III

48 CFR Chapter 1

Federal Regulations; OMB Circulars, OFPP Policy Letters, and CASB Cost Accounting Standards Included in the Semiannual Agenda of Federal Activities; Withdrawal

AGENCY: Office of Management and Budget.

ACTION: Withdrawal.

SUMMARY: The Office of Management and Budget (OMB) is announcing the withdrawal of its semiannual agenda of upcoming activities for Federal regulations, OMB Circulars, Office of Federal Procurement Policy (OFPP) Policy Letters, and Cost Accounting Standards Board (CASB) Cost Accounting Standards.

DATES: The withdrawal is effective October 14, 2011.

FOR FURTHER INFORMATION CONTACT: See agency person listed for each entry in the agenda, c/o Office of Management and Budget, Washington, DC 20503. On the overall agenda, contact Kevin F. Neyland, (202) 395–5897, at the above address.

SUPPLEMENTARY INFORMATION: In a document published in the **Federal Register** of September 29, 2011 (77 FR 60357), OMB published its semiannual regulatory agenda. That document is being withdrawn because the agenda was prematurely and improperly published.

Dated: October 11, 2011.

Kevin F. Neyland,

Deputy Administrator, Office of Information and Regulatory Affairs.

[FR Doc. 2011–27637 Filed 11–9–11; 8:45 am]

BILLING CODE P

DEPARTMENT OF AGRICULTURE

Animal and Plant Health Inspection Service

9 CFR Parts 93, 94, and 98

[Docket No. APHIS–2009–0093]

Importation of Live Swine, Swine Semen, Pork, and Pork Products From Liechtenstein and Switzerland

AGENCY: Animal and Plant Health Inspection Service, USDA.

ACTION: Final rule.

SUMMARY: We are amending the regulations governing the importation of animals and animal products to add Liechtenstein and Switzerland to the region of Europe that we recognize as low risk for classical swine fever (CSF). We are also adding Liechtenstein to the list of regions we consider free from swine vesicular disease (SVD) and to the list of regions considered free from foot-and-mouth disease (FMD) and rinderpest. These actions will relieve some restrictions on the importation into the United States of certain animals and animal products from those regions, while continuing to protect against the introduction of CSF, SVD, FMD, and rinderpest into the United States.

DATES: *Effective Date:* November 25, 2011.

FOR FURTHER INFORMATION CONTACT: Dr. Kelly Rhodes, Regionalization Evaluation Services, Import, Sanitary Trade Issues Team, National Center for Import and Export, VS, APHIS, 4700 River Road Unit 38, Riverdale, MD 20737; (301) 734–4356.

SUPPLEMENTARY INFORMATION:

Background

The Animal and Plant Health Inspection Service (APHIS) of the United States Department of Agriculture (USDA) regulates the importation of animals and animal products into the United States to guard against the introduction of animal diseases not currently present or prevalent in this country. The regulations in 9 CFR parts 93, 94 and 98 (referred to below as the regulations) prohibit or restrict the importation of specified animals and animal products to prevent the introduction into the United States of various animal diseases, including classical swine fever (CSF), swine vesicular disease (SVD), foot-and-mouth disease (FMD), and rinderpest. These are dangerous and destructive communicable diseases of ruminants and swine.

Sections 94.9 and 94.10 of the regulations list regions of the world that are declared free of or low-risk for CSF. Sections 94.24 and 98.38 specify restrictions necessary to mitigate the risk of introducing CSF into the United States via the importation of pork, pork products, live swine, and swine semen from the region of Europe that we recognize as low risk for CSF (currently, 19 Member States of the European Union (EU)). Section 94.12 of the regulations lists regions that are declared free of SVD. Section 94.13 of the regulations lists regions that have been determined to be free of SVD, but that are subject to certain restrictions because of their proximity to or trading relationships with SVD-affected regions. Section 94.1 of the regulations lists regions of the world that are declared free of rinderpest or free of both rinderpest and FMD. Section 94.11 of the regulations lists regions that have been determined to be free of rinderpest and FMD, but that are subject to certain restrictions because of their proximity to or trading relationships with rinderpest- or FMD-affected regions.

On May 19, 2011, we published in the **Federal Register** (76 FR 28910–28913, Docket No. APHIS–2009–0093) a proposed rule [1] to add Liechtenstein and Switzerland to the region of Europe that we recognize as low risk for CSF and to add Liechtenstein to the lists of regions we consider free from SVD and from FMD and rinderpest.

We solicited comments concerning our proposal for 60 days ending July 18, 2011.

We received three comments by that date. They were from an individual and from two organizations representing pork producers. The comments are discussed below.

With respect to our proposal to add Switzerland to the region of Europe that we recognize as low risk for CSF, one commenter asked about Switzerland's current practice regarding the feeding of catering waste to pigs in that country. If Switzerland allows this practice, the

[1] To view the proposed rule, supporting documents, and the comments we received, go to *http://www.regulations.gov/#!docketDetail;D=APHIS-2009-0093.*

commenter wanted APHIS to explain its decision that the level of CSF risk in Switzerland is equivalent to, or less than, the CSF risk in that portion of the EU that APHIS currently recognizes as low risk for CSF. The commenter stated that the EU (which does not include Switzerland) bans the feeding of catering waste to farm animals other than fur animals to reduce disease risk to swine.

Dr. Lukas Perler, head of animal health, Swiss Federal Veterinary Office, has confirmed that Switzerland began enforcing a prohibition on feeding catering waste to pigs on July 1, 2011.

Two commenters noted that our CSF risk evaluations for Switzerland and Liechtenstein indicated those countries rely on passive surveillance and a small amount of serological surveillance in domestic swine and wild boar to detect an outbreak. One commenter urged APHIS to require Switzerland and Liechtenstein to implement and enforce an active surveillance program, to be verified by APHIS, before allowing the countries to export meat to the United States under conditions applicable to regions recognized as low risk for CSF. The other commenter wanted APHIS to explain its decision that the level of CSF risk in Switzerland and Liechtenstein is equivalent to, or less than, the CSF risk in that portion of the EU that APHIS currently recognizes as low risk for CSF, when Switzerland and Liechtenstein do not have a national surveillance plan for CSF that is equivalent to other EU countries or the United States.

Our risk assessment found no evidence that CSF virus currently exists in Switzerland or Liechtenstein and no immediate and significant risks associated with this hazard. The last CSF cases in Switzerland occurred in 1993 in domestic swine and 1999 in wild boar; Liechtenstein has never reported a CSF outbreak.

CSF infection in free-ranging wild boar is not an immediate concern for introduction of the disease into Switzerland or Liechtenstein, since the closest known infected population is located over 150 kilometers from the Swiss border, in Germany.

Switzerland and Liechtenstein have adopted import and trade regulations concerning live animals and animal products that are equivalent to the European Commission regulations that apply to all EU Member States. Consequently, the baseline risk of CSF introduction into Switzerland or Liechtenstein through import or trade is similar to that of an EU Member State.

Since Switzerland and Liechtenstein import very few live swine, require substantial veterinary oversight of the live swine that are imported, and essentially prohibit transit across either country, the risk of CSF introduction by this pathway is negligible.

Passive surveillance in wild boar is ongoing through hunter submissions. Hunters are required by law to report any wild boar found dead to an official veterinarian, who retrieves the carcass and submits it for pathology and CSF testing. Some cantons—including Ticino and the northern cantons of Zürich, Basel, and Aargau—require CSF testing of all hunted wild boar.

The Swiss Veterinary Service is enhancing passive surveillance for CSF through training and outreach activities focused on producers and private veterinarians. The emergency response plan includes provisions for CSF-specific training and outreach for veterinary professionals, animal keepers, the hunting community, and the general public.

In addition, Switzerland tests 700–1,000 swine each year for CSF, primarily for import or export of domestic swine, or for boars entering artificial insemination centers.

We believe the level of surveillance for CSF is adequate and that the facts support our determination that level of CSF risk in Switzerland and Liechtenstein is equivalent to, or less than, the CSF risk in that portion of the EU that APHIS currently recognizes as low risk for CSF.

Finally, one commenter expressed general concern about the effect of imports on American farmers. The Office of the United States Trade Representative (USTR) calls trade critical to America's prosperity—fueling economic growth, supporting good jobs at home, raising living standards, and helping Americans provide for their families with affordable goods and services. Both imports and exports contribute to the U.S. economy. While exports raise productivity and incomes, imports increase consumer choices and purchasing power. As provided by the Animal Health Protection Act, APHIS regulates the importation of animals and animal products only to the extent necessary to protect against the introduction of livestock diseases and pests that could harm U.S. agriculture. USDA places a high priority on removing unnecessary trade barriers on both imports and exports.

Therefore, for the reasons given in the proposed rule and in this document, we are adopting the proposed rule as a final rule, without change.

Effective Date

This is a substantive rule that relieves restrictions and, pursuant to the provisions of 5 U.S.C. 553, may be made effective less than 30 days after publication in the **Federal Register**. This rule adds Liechtenstein and Switzerland to the region of Europe that we recognize as low-risk for CSF. This rule also adds Liechtenstein to the list of regions we consider free from swine vesicular disease and to the list of regions we consider free from FMD and rinderpest. These changes will allow breeding swine, swine semen, and pork and pork products to be imported into the United States from these countries subject to certain conditions. We have determined that approximately 2 weeks are needed to ensure that APHIS and Department of Homeland Security, Bureau of Customs and Border Protection, personnel at ports of entry receive official notice of this change in the regulations. Therefore, the Administrator of the Animal and Plant Health Inspection Service has determined that this rule should be effective 15 days after publication in the **Federal Register**.

Executive Order 12866 and Regulatory Flexibility Act

This final rule is subject to Executive Order 12866. However, for this action, the Office of Management and Budget has waived its review under Executive Order 12866.

In accordance with the Regulatory Flexibility Act, we have analyzed the potential economic effects of this action on small entities. Copies of the full analysis are available by contacting the person listed under **FOR FURTHER INFORMATION CONTACT** or on the Regulations.gov Web site (see footnote 1 above for instructions for accessing Regulations.gov).

Our analysis identifies U.S. swine producers as the small entities potentially affected by the provisions of the rule, but also notes that Switzerland and Liechtenstein have, historically, exported a minimal amount of swine or swine products.

Under these circumstances, the Administrator of the Animal and Plant Health Service has determined that this action will not have a significant economic impact on a substantial number of small entities.

Executive Order 12988

This rule has been reviewed under Executive Order 12988, Civil Justice Reform. This rule: (1) Preempts all State and local laws and regulations that are inconsistent with this rule; (2) has no retroactive effect; and (3) does not require administrative proceedings before parties may file suit in court challenging this rule.

Paperwork Reduction Act

This final rule contains no information collection or recordkeeping requirements under the Paperwork Reduction Act of 1995 (44 U.S.C. 3501 *et seq.*).

List of Subjects

9 CFR Part 93

Animal diseases, Imports, Livestock, Poultry and poultry products, Quarantine, Reporting and recordkeeping requirements.

9 CFR Part 94

Animal diseases, Imports, Livestock, Meat and meat products, Milk, Poultry and poultry products, Reporting and recordkeeping requirements.

9 CFR Part 98

Animal diseases, Imports.

Accordingly, we are amending 9 CFR parts 93, 94, and 98 as follows:

PART 93—IMPORTATION OF CERTAIN ANIMALS, BIRDS, FISH, AND POULTRY, AND CERTAIN ANIMAL, BIRD, AND POULTRY PRODUCTS; REQUIREMENTS FOR MEANS OF CONVEYANCE AND SHIPPING CONTAINERS

■ 1. The authority citation for part 93 continues to read as follows:

Authority: 7 U.S.C. 1622 and 8301–8317; 21 U.S.C. 136 and 136a; 31 U.S.C. 9701; 7 CFR 2.22, 2.80, and 371.4.

■ 2. In § 93.500, the definition of *APHIS-defined EU CSF region* is removed and a definition of *APHIS-defined European CSF region* is added, in alphabetical order, to read as follows:

§ 93.500 Definitions.

* * * * *

APHIS-defined European CSF region. The regions of Austria, Belgium, the Czech Republic, Denmark, Finland, France, Germany, Greece, Italy, Latvia, Liechtenstein, Lithuania, Luxembourg, the Netherlands, Poland, Portugal, Republic of Ireland, Spain, Sweden, Switzerland, and the United Kingdom (England, Scotland, Wales, the Isle of Man, and Northern Ireland).

* * * * *

§ 93.505 [Amended]

3. In § 93.505, paragraph (a), the words ''APHIS-defined EU CSF region'' are removed and the words ''APHIS-defined European CSF region'' are added in their place.

PART 94—RINDERPEST, FOOT-AND-MOUTH DISEASE, EXOTIC NEWCASTLE DISEASE, AFRICAN SWINE FEVER, CLASSICAL SWINE FEVER, SWINE VESICULAR DISEASE, AND BOVINE SPONGIFORM ENCEPHALOPATHY: PROHIBITED AND RESTRICTED IMPORTATIONS

■ 4. The authority citation for part 94 continues to read as follows:

Authority: 7 U.S.C. 450, 7701–7772, 7781–7786, and 8301–8317; 21 U.S.C. 136 and 136a; 31 U.S.C. 9701; 7 CFR 2.22, 2.80, and 371.4.

■ 5. In § 94.0, the definition of *APHIS-defined EU CSF region* is removed and a definition of *APHIS-defined European CSF region* is added, in alphabetical order, to read as follows:

§ 94.0 Definitions.

* * * * *

APHIS-defined European CSF region. The regions of Austria, Belgium, the Czech Republic, Denmark, Finland, France, Germany, Greece, Italy, Latvia, Liechtenstein, Lithuania, Luxembourg, the Netherlands, Poland, Portugal, Republic of Ireland, Spain, Sweden, Switzerland, and the United Kingdom (England, Scotland, Wales, the Isle of Man, and Northern Ireland).

* * * * *

§ 94.1 [Amended]

■ 6. In § 94.1, paragraph (a)(2) is amended by adding the word ''Liechtenstein,'' immediately after the word ''Latvia,''.

§ 94.9 [Amended]

■ 7. In § 94.9, paragraphs (b) and (c) introductory text, the words ''APHIS-defined EU CSF region'' are removed each time they appear and the words ''APHIS-defined European CSF region'' are added in their place.

§ 94.10 [Amended]

■ 8. In § 94.10, paragraphs (b) and (c), the words ''APHIS-defined EU CSF region'' are removed each time they appear and the words ''APHIS-defined European CSF region'' are added in their place.

§ 94.11 [Amended]

■ 9. In § 94.11, paragraph (a) is amended by adding the word ''Liechtenstein,'' immediately after the word ''Latvia,''.

§ 94.12 [Amended]

■ 10. In § 94.12, paragraph (a) is amended by adding the word ''Liechtenstein,'' immediately after the word ''Latvia,''.

§ 94.13 [Amended]

■ 11. In § 94.13, in the introductory text, the first sentence is amended by adding the word ''Liechtenstein,'' immediately after the word ''Latvia,''.

§ 94.24 [Amended]

■ 12. Section 94.24 is amended as follows:

■ a. In the section heading, by removing the words ''APHIS-defined EU CSF region'' and adding the words ''APHIS-defined European CSF region'' in their place.

■ b. In paragraph (a) introductory text and paragraph (a)(1)(i), by removing the words ''APHIS-defined EU CSF region'' each time they appear and adding the words ''APHIS-defined European CSF region'' in their place.

■ c. In paragraphs (a)(1)(ii) and (a)(1)(iii), by removing the words ''APHIS-defined EU CSF region'' each time they appear and adding the words ''APHIS-defined European CSF region'' in their place, and by removing the words ''of the Member State'' each time they appear.

■ d. In paragraph (a)(5), by removing the words ''of the APHIS-defined EU CSF region Member State''.

■ e. In paragraph (b) introductory text and paragraph (b)(2)(i), by removing the words ''APHIS-defined EU CSF region'' each time they appear and adding the words ''APHIS-defined European CSF region'' in their place.

■ f. In paragraph (b)(2)(ii) and (b)(2)(iii), by removing the words ''the APHIS-defined EU CSF region'' each time they appear and adding the words ''the APHIS-defined European CSF region'' in their place, and by removing the words ''of the Member State'' each time they appear.

■ g. In paragraph (b)(6), by removing the words ''of the APHIS-defined EU CSF region Member State''.

PART 98—IMPORTATION OF CERTAIN ANIMAL EMBRYOS AND ANIMAL SEMEN

■ 13. The authority citation for part 98 continues to read as follows:

Authority: 7 U.S.C. 1622 and 8301–8317; 21 U.S.C. 136 and 136a; 31 U.S.C. 9701; 7 CFR 2.22, 2.80, and 371.4.

■ 14. In § 98.30, the definition of *APHIS-defined EU CSF region* is removed and a definition of *APHIS-defined European CSF region* is added, in alphabetical order, to read as follows:

§ 98.30 Definitions.

* * * * *

APHIS-defined European CSF region. The regions of Austria, Belgium, the

Czech Republic, Denmark, Finland, France, Germany, Greece, Italy, Latvia, Liechtenstein, Lithuania, Luxembourg, the Netherlands, Poland, Portugal, Republic of Ireland, Spain, Sweden, Switzerland, and the United Kingdom (England, Scotland, Wales, the Isle of Man, and Northern Ireland).

* * * * *

§ 98.38 [Amended]

■ 15. Section 98.38 is amended as follows:

■ a. In the section heading, by removing the words ''APHIS-defined EU CSF region'' and adding the words ''APHIS-defined European CSF region'' in their place.

■ b. In the introductory text, by removing the words ''APHIS-defined EU CSF region'' and adding the words ''APHIS-defined European CSF region'' in their place.

■ c. In paragraph (a), by removing the words ''of the APHIS-defined EU CSF region Member State''.

■ d. In paragraph (b)(1), by removing the words ''APHIS-defined EU CSF region'' and adding the words ''APHIS-defined European CSF region'' in their place.

■ e. In paragraphs (b)(2) and (b)(3), by removing the words ''APHIS-defined EU CSF region'' each time they appear and adding the words ''APHIS-defined European CSF region'' in their place, and by removing the words ''of the Member State'' each time they appear.

■ f. In paragraph (i), by removing the words ''of the APHIS-defined EU CSF region Member State''.

Done in Washington, DC, this 4th day of November 2011.

Kevin Shea,

Acting Administrator, Animal and Plant Health Inspection Service.

[FR Doc. 2011–29133 Filed 11–9–11; 8:45 am]

BILLING CODE 3410–34–P

DEPARTMENT OF TRANSPORTATION

Federal Aviation Administration

14 CFR Part 39

[Docket No. FAA–2011–0716; Directorate Identifier 2011–NM–013–AD; Amendment 39–16858; AD 2011–23–07]

RIN 2120–AA64

Airworthiness Directives; Gulfstream Aerospace LP (Type Certificate Previously Held by Israel Aircraft Industries, Ltd.) Airplanes

AGENCY: Federal Aviation Administration (FAA), Department of Transportation (DOT).

ACTION: Final rule.

SUMMARY: We are adopting a new airworthiness directive (AD) for certain Gulfstream Aerospace LP (type certificate previously held by Israel Aircraft Industries, Ltd.) Model Galaxy and Gulfstream G150 airplanes; and Gulfstream Aerospace LP Model Gulfstream 200 airplanes. This AD results from mandatory continuing airworthiness information (MCAI) originated by an aviation authority of another country to identify and correct an unsafe condition on an aviation product. The MCAI describes the unsafe condition as:

A broken aileron servo actuator centering spring rod was discovered on a model G100 aircraft during a routine scheduled maintenance inspection. * * * This latent failure of a centering spring rod, if not detected and corrected, in conjunction with the disconnection of the normal mechanical control system of the same servo actuator would lead to loss [of] control of the flight control surface [aileron or elevator]. This condition would reduce the control capability of the airplane and imposes a higher workload on the flight crew reducing their ability to cope with adverse operating conditions.

We are issuing this AD to require actions to correct the unsafe condition on these products.

DATES: This AD becomes effective December 15, 2011.

The Director of the Federal Register approved the incorporation by reference of certain publications listed in this AD as of December 15, 2011.

ADDRESSES: You may examine the AD docket on the Internet at *http://www.regulations.gov* or in person at the U.S. Department of Transportation, Docket Operations, M–30, West Building Ground Floor, Room W12–140, 1200 New Jersey Avenue SE., Washington, DC.

FOR FURTHER INFORMATION CONTACT: Mike Borfitz, Aerospace Engineer, International Branch, ANM–116, Transport Airplane Directorate, FAA, 1601 Lind Avenue SW., Renton, Washington 98057–3356; telephone (425) 227–2677; fax (425) 227–1149.

SUPPLEMENTARY INFORMATION:

Discussion

We issued a notice of proposed rulemaking (NPRM) to amend 14 CFR part 39 to include an AD that would apply to the specified products. That NPRM was published in the **Federal Register** on July 14, 2011 (76 FR 41432). That NPRM proposed to correct an unsafe condition for the specified products. The MCAI states:

A broken aileron servo actuator centering spring rod was discovered on a model G100 aircraft during a routine scheduled maintenance inspection. This centering spring rod is common to all Gulfstream Mid Cabin model (G100, G150 and G200) aileron control servo actuators and the G200 elevator control servo actuator too. The function of the centering spring rod is to maintain the affected servo actuator and its associated flight control surface in a centered position in the event of a disconnect of the normal mechanical control system input from the flight crew to the same servo actuator. This latent failure of a centering spring rod, if not detected and corrected, in conjunction with the disconnection of the normal mechanical control system of the same servo actuator would lead to loss [of] control of the flight control surface/aileron. This condition would reduce the control capability of the airplane and imposes a higher workload on the flight crew reducing their ability to cope with adverse operating conditions.

The required actions include a detailed inspection of the servo actuator centering spring rods for the aileron and elevator to detect fractured or broken rods, and replacing the rods if necessary. You may obtain further information by examining the MCAI in the AD docket.

Comments

We gave the public the opportunity to participate in developing this AD. We received no comments on the NPRM (July 14, 2011 (76 FR 41432)) or on the determination of the cost to the public.

Conclusion

We reviewed the available data and determined that air safety and the public interest require adopting the AD as proposed.

Differences Between This AD and the MCAI or Service Information

We have reviewed the MCAI and related service information and, in general, agree with their substance. But we might have found it necessary to use different words from those in the MCAI to ensure the AD is clear for U.S. operators and is enforceable. In making these changes, we do not intend to differ substantively from the information provided in the MCAI and related service information.

We might also have required different actions in this AD from those in the MCAI in order to follow our FAA policies. Any such differences are highlighted in a NOTE within the AD.

Costs of Compliance

We estimate that this AD will affect about 200 products of U.S. registry. We also estimate that it will take about 19 work-hours per product to comply with the basic requirements of this AD. The average labor rate is $85 per work-hour. Based on these figures, we estimate the

cost of this AD to the U.S. operators to be $323,000, or $1,615 per product.

In addition, we estimate that any necessary follow-on actions would take up to 20 work-hours and require parts costing $0, for a cost of $1,700 per product. We have no way of determining the number of products that may need these actions. Where the service information lists required parts costs that are covered under warranty, we have assumed that there will be no charge for these costs. As we do not control warranty coverage for affected parties, some parties may incur costs higher than estimated here.

Authority for This Rulemaking

Title 49 of the United States Code specifies the FAA's authority to issue rules on aviation safety. Subtitle I, section 106, describes the authority of the FAA Administrator. ''Subtitle VII: Aviation Programs,'' describes in more detail the scope of the Agency's authority.

We are issuing this rulemaking under the authority described in ''Subtitle VII, Part A, Subpart III, Section 44701: General requirements.'' Under that section, Congress charges the FAA with promoting safe flight of civil aircraft in air commerce by prescribing regulations for practices, methods, and procedures the Administrator finds necessary for safety in air commerce. This regulation is within the scope of that authority because it addresses an unsafe condition that is likely to exist or develop on products identified in this rulemaking action.

Regulatory Findings

We determined that this AD will not have federalism implications under Executive Order 13132. This AD will not have a substantial direct effect on the States, on the relationship between the national government and the States, or on the distribution of power and responsibilities among the various levels of government.

For the reasons discussed above, I certify this AD:

1. Is not a ''significant regulatory action'' under Executive Order 12866;

2. Is not a ''significant rule'' under the DOT Regulatory Policies and Procedures (44 FR 11034, February 26, 1979); and

3. Will not have a significant economic impact, positive or negative, on a substantial number of small entities under the criteria of the Regulatory Flexibility Act.

We prepared a regulatory evaluation of the estimated costs to comply with this AD and placed it in the AD docket.

Examining the AD Docket

You may examine the AD docket on the Internet at *http://www.regulations.gov;* or in person at the Docket Operations office between 9 a.m. and 5 p.m., Monday through Friday, except Federal holidays. The AD docket contains the NPRM (July 14, 2011 (76 FR 41432)), the regulatory evaluation, any comments received, and other information. The street address for the Docket Operations office (telephone (800) 647–5527) is in the **ADDRESSES** section. Comments will be available in the AD docket shortly after receipt.

List of Subjects in 14 CFR Part 39

Air transportation, Aircraft, Aviation safety, Incorporation by reference, Safety.

Adoption of the Amendment

Accordingly, under the authority delegated to me by the Administrator, the FAA amends 14 CFR part 39 as follows:

PART 39—AIRWORTHINESS DIRECTIVES

■ 1. The authority citation for part 39 continues to read as follows:

Authority: 49 U.S.C. 106(g), 40113, 44701.

§ 39.13 [Amended]

■ 2. The FAA amends § 39.13 by adding the following new AD:

2011–23–07 Gulfstream Aerospace LP (Type Certificate Previously Held by Israel Aircraft Industries, Ltd.): Amendment 39–16858. Docket No. FAA–2011–0716; Directorate Identifier 2011–NM–013–AD.

Effective Date

(a) This airworthiness directive (AD) becomes effective December 15, 2011.

Affected ADs

(b) None.

Applicability

(c) This AD applies to the products identified in paragraphs (c)(1) and (c)(2) of this AD, certificated in any category.

(1) Gulfstream Aerospace LP (Type Certificate previously held by Israel Aircraft Industries, Ltd.) Model Gulfstream G150 airplanes, serial numbers 201 through 286 inclusive.

(2) Gulfstream Aerospace LP (Type Certificate previously held by Israel Aircraft Industries, Ltd.) Model Galaxy airplanes; and Gulfstream Aerospace LP Model Gulfstream 200 airplanes; serial numbers 004 through 231 inclusive.

Subject

(d) Air Transport Association (ATA) of America Code 27: Flight controls.

Reason

(e) The mandatory continuing airworthiness information (MCAI) states:

A broken aileron servo actuator centering spring rod was discovered on a model G100 aircraft during a routine scheduled maintenance inspection. * * * This latent failure of a centering spring rod, if not detected and corrected, in conjunction with the disconnection of the normal mechanical control system of the same servo actuator would lead to loss [of] control of the flight control surface [aileron or elevator]. This condition would reduce the control capability of the airplane and imposes a higher workload on the flight crew reducing their ability to cope with adverse operating conditions.

Compliance

(f) You are responsible for having the actions required by this AD performed within the compliance times specified, unless the actions have already been done.

Inspection

(g) Within 12 months after the effective date of this AD, do the actions specified by paragraph (g)(1) or (g)(2) of this AD, as applicable.

(1) For Model Gulfstream G150 airplanes: Do a one-time detailed inspection of the aileron control servo actuators to detect fractured or broken centering spring rods, in accordance with the Accomplishment Instructions of Gulfstream Service Bulletin 150–27–123, Revision 1, dated January 27, 2011.

(2) For Model Galaxy and Gulfstream 200 airplanes: Do a one-time detailed inspection of the aileron and elevator control servo actuators to detect fractured or broken centering spring rods, in accordance with the Accomplishment Instructions of Gulfstream Service Bulletin 200–27–374, Revision 1, dated January 27, 2011.

Corrective Actions

(h) If any centering spring rod is found fractured or broken during any inspection required by this AD: Before further flight, replace the centering spring rod in accordance with a method approved by the Manager, International Branch, ANM 116, Transport Airplane Directorate, FAA, or the Civil Aviation Authority of Israel (CAAI) (or its delegated agent).

Credit for Actions Accomplished in Accordance With Previous Service Information

(i) Actions done before the effective date of this AD in accordance with Gulfstream Service Bulletin 150–27–123 or 200–27–374, both dated October 27, 2010, as applicable, are considered acceptable for the actions required by paragraph (g) of this AD.

FAA AD Differences

Note 1: This AD differs from the MCAI and/or service information as follows:

The MCAI AD does not specify a corrective action for fractured or broken rods; however, paragraph (h) of this AD requires corrective action.

Other FAA AD Provisions

(j) The following provisions also apply to this AD:

(1) *Alternative Methods of Compliance (AMOCs):* The Manager, International Branch, ANM–116, Transport Airplane Directorate, FAA, has the authority to approve AMOCs for this AD, if requested using the procedures found in 14 CFR 39.19. In accordance with 14 CFR 39.19, send your request to your principal inspector or local Flight Standards District Office, as appropriate. If sending information directly to the International Branch, send it to ATTN: Mike Borfitz, Aerospace Engineer, International Branch, ANM–116, Transport Airplane Directorate, FAA, 1601 Lind Avenue SW., Renton, Washington 98057–3356; telephone (425) 227–2677; fax (425) 227–1149. Information may be emailed to: *9-ANM-116-AMOC-REQUESTS@faa.gov.* Before using any approved AMOC, notify your appropriate principal inspector, or lacking a principal inspector, the manager of the local flight standards district office/certificate holding district office. The AMOC approval letter must specifically reference this AD.

(2) *Airworthy Product:* For any requirement in this AD to obtain corrective actions from a manufacturer or other source, use these actions if they are FAA-approved. Corrective actions are considered FAA-approved if they are approved by the State of Design Authority (or their delegated agent). You are required to assure the product is airworthy before it is returned to service.

Related Information

(k) Refer to MCAI Israeli Airworthiness Directives 27–10–11–03, dated December 6, 2010, and 27–10–12–29, dated January 4, 2011; and Gulfstream Service Bulletins 150–27–123 and 200–27–374, both Revision 1, both dated January 27, 2011; for related information.

Material Incorporated by Reference

(l) You must use Gulfstream Service Bulletin 150–27–123, Revision 1, dated January 27, 2011; or Gulfstream Service Bulletin 200–27–374, Revision 1, dated January 27, 2011; as applicable; to do the actions required by this AD, unless the AD specifies otherwise.

(1) The Director of the Federal Register approved the incorporation by reference of this service information under 5 U.S.C. 552(a) and 1 CFR part 51.

(2) For service information identified in this AD, contact Gulfstream Aerospace Corporation, P.O. Box 2206, Mail Station D–25, Savannah, Georgia 31402–2206; telephone (800) 810–4853; fax (912) 965–3520; email *pubs@gulfstream.com;* Internet *http://www.gulfstream.com/product_support/technical_pubs/pubs/index.htm.*

(3) You may review copies of the service information at the FAA, Transport Airplane Directorate, 1601 Lind Avenue SW., Renton, Washington. For information on the availability of this material at the FAA, call (425) 227–1221.

(4) You may also review copies of the service information that is incorporated by reference at the National Archives and Records Administration (NARA). For information on the availability of this material at NARA, call (202) 741–6030, or go to: *http://www.archives.gov/federal_register/code_of_federal_regulations/ibr_locations.html.*

Issued in Renton, Washington, on October 20, 2011.

Kalene C. Yanamura,

Acting Manager, Transport Airplane Directorate, Aircraft Certification Service.

[FR Doc. 2011–28572 Filed 11–9–11; 8:45 a.m.]

BILLING CODE 4910–13–P

DEPARTMENT OF TRANSPORTATION

Federal Aviation Administration

14 CFR Part 39

[Docket No. FAA–2011–0971; Directorate Identifier 2011–CE–030–AD; Amendment 39–16862; AD 2011–23–11]

RIN 2120–AA64

Airworthiness Directives; Pacific Aerospace Limited Airplanes

AGENCY: Federal Aviation Administration (FAA), Department of Transportation (DOT).

ACTION: Final rule.

SUMMARY: We are adopting a new airworthiness directive (AD) for Pacific Aerospace Limited Model FU24 Airplanes. This AD results from mandatory continuing airworthiness information (MCAI) issued by an aviation authority of another country to identify and correct an unsafe condition on an aviation product. The MCAI describes the unsafe condition as:

Investigation of a recent Cresco 08–600 accident identified a risk of the hopper lid interfering with the opening of the canopy in the event of an emergency landing. The pilot was prevented from opening the canopy by the hopper lid in the fully forward open position. This AD is issued due to the fact that the hopper lid installation on the accident aircraft was an unapproved modification and the Fletcher FU24 hopper installation is a similar design to the Cresco 08–600.

We are issuing this AD to require actions to correct the unsafe condition on these products.

DATES: This AD is effective December 15, 2011.

ADDRESSES: You may examine the AD docket on the Internet at *http://www.regulations.gov* or in person at Document Management Facility, U.S. Department of Transportation, Docket Operations, M–30, West Building Ground Floor, Room W12–140, 1200 New Jersey Avenue SE., Washington, DC 20590.

FOR FURTHER INFORMATION CONTACT: Karl Schletzbaum, Aerospace Engineer, FAA, Small Airplane Directorate, 901 Locust, Room 301, Kansas City, Missouri 64106; *telephone:* (816) 329–4146; *fax:* (816) 329–4090; *email: karl.schletzbaum@faa.gov.*

SUPPLEMENTARY INFORMATION:

Discussion

We issued a notice of proposed rulemaking (NPRM) to amend 14 CFR part 39 to include an AD that would apply to the specified products. That NPRM was published in the **Federal Register** on September 8, 2011 (76 FR 55614). That NPRM proposed to correct an unsafe condition for the specified products. The MCAI states:

Investigation of a recent Cresco 08–600 accident identified a risk of the hopper lid interfering with the opening of the canopy in the event of an emergency landing. The pilot was prevented from opening the canopy by the hopper lid in the fully forward open position. This AD is issued due to the fact that the hopper lid installation on the accident aircraft was an unapproved modification and the Fletcher FU24 hopper installation is a similar design to the Cresco 08–600.

The MCAI requires reviewing the aircraft records, doing a conformity inspection for an approved design hopper lid installation, and removing the hopper lid installation, if not an approved design. You may obtain further information by examining the MCAI in the AD docket.

Comments

We gave the public the opportunity to participate in developing this AD. We received no comments on the NPRM (76 FR 55614, September 8, 2011) or on the determination of the cost to the public.

Conclusion

We reviewed the available data and determined that air safety and the public interest require adopting the AD as proposed.

Differences Between This AD and the MCAI or Service Information

We have reviewed the MCAI and related service information and, in general, agree with their substance. But we might have found it necessary to use different words from those in the MCAI to ensure the AD is clear for U.S. operators and is enforceable. In making these changes, we do not intend to differ substantively from the information provided in the MCAI and related service information.

We might also have required different actions in this AD from those in the MCAI in order to follow FAA policies. Any such differences are highlighted in a NOTE within the AD.

Costs of Compliance

We estimate that this AD will affect 1 product of U.S. registry. We also estimate that it would take about 1 work-hours per product to comply with the basic requirements of this AD. The average labor rate is $85 per work-hour. Required parts would cost about $0 per product.

Based on these figures, we estimate the cost of the AD on U.S. operators to be $85, or $85 per product.

In addition, we estimate that any necessary follow-on actions would take about 6 work-hours and require parts costing $0, for a cost of $510 per product. We have no way of determining the number of products that may need these actions.

Authority for This Rulemaking

Title 49 of the United States Code specifies the FAA's authority to issue rules on aviation safety. Subtitle I, section 106, describes the authority of the FAA Administrator. ''Subtitle VII: Aviation Programs,'' describes in more detail the scope of the Agency's authority.

We are issuing this rulemaking under the authority described in ''Subtitle VII, Part A, Subpart III, Section 44701: General requirements.'' Under that section, Congress charges the FAA with promoting safe flight of civil aircraft in air commerce by prescribing regulations for practices, methods, and procedures the Administrator finds necessary for safety in air commerce. This regulation is within the scope of that authority because it addresses an unsafe condition that is likely to exist or develop on products identified in this rulemaking action.

Regulatory Findings

We determined that this AD will not have federalism implications under Executive Order 13132. This AD will not have a substantial direct effect on the States, on the relationship between the national government and the States, or on the distribution of power and responsibilities among the various levels of government.

For the reasons discussed above, I certify this AD:

(1) Is not a ''significant regulatory action'' under Executive Order 12866;

(2) Is not a ''significant rule'' under DOT Regulatory Policies and Procedures (44 FR 11034, February 26, 1979); and

(3) Will not have a significant economic impact, positive or negative, on a substantial number of small entities under the criteria of the Regulatory Flexibility Act.

We prepared a regulatory evaluation of the estimated costs to comply with this AD and placed it in the AD Docket.

Examining the AD Docket

You may examine the AD docket on the Internet at *http://www.regulations.gov;* or in person at the Docket Management Facility between 9 a.m. and 5 p.m., Monday through Friday, except Federal holidays. The AD docket contains the NPRM (76 FR 55614, September 8, 2011), the regulatory evaluation, any comments received, and other information. The street address for the Docket Office (telephone (800) 647–5527) is in the **ADDRESSES** section. Comments will be available in the AD docket shortly after receipt.

List of Subjects in 14 CFR Part 39

Air transportation, Aircraft, Aviation safety, Incorporation by reference, Safety.

Adoption of the Amendment

Accordingly, under the authority delegated to me by the Administrator, the FAA amends 14 CFR part 39 as follows:

PART 39—AIRWORTHINESS DIRECTIVES

■ 1. The authority citation for part 39 continues to read as follows:

Authority: 49 U.S.C. 106(g), 40113, 44701.

§ 39.13 [Amended]

■ 2. The FAA amends § 39.13 by adding the following new AD:

2011–23–11 Pacific Aerospace Limited: Amendment 39–16862; Docket No. FAA–2011–0971; Directorate Identifier 2011–CE–030–AD.

(a) Effective Date

This airworthiness directive (AD) becomes effective December 15, 2011.

(b) Affected ADs

None.

(c) Applicability

This AD applies to Pacific Aerospace Limited Models FU24–954 and FU24A–954 airplanes, all serial numbers, certificated in any category.

(d) Subject

Air Transport Association of America (ATA) Code 52: Doors.

(e) Reason

The mandatory continuing airworthiness information (MCAI) states:

Investigation of a recent Cresco 08–600 accident identified a risk of the hopper lid interfering with the opening of the canopy in the event of an emergency landing. The pilot was prevented from opening the canopy by the hopper lid in the fully forward open position. This AD is issued due to the fact that the hopper lid installation on the accident aircraft was an unapproved modification and the Fletcher FU24 hopper installation is a similar design to the Cresco 08–600.

The MCAI requires reviewing the aircraft records, doing a conformity inspection for an approved design hopper lid installation, and removing the hopper lid installation, if not an approved design.

(f) Actions and Compliance

Unless already done, do the following actions within 150 hours time-in-service (TIS) after December 15, 2011 (the effective date of this AD) or within 12 calendar months after December 15, 2011 (the effective date of this AD), whichever occurs first:

(1) Review the aircraft records and determine whether a hopper lid modification has been recorded. If a hopper lid modification has been recorded, determine whether the aircraft was certified for release to service after completion of the modification and whether the applicable approved technical data (supplemental type certificate (STC) or field approval) is referenced. Visually inspect for an unapproved hopper lid modification.

(2) If the hopper lid modification is an approved design, do a conformity inspection and determine whether the hopper lid modification conforms to the applicable approved technical data (supplemental type certificate (STC) or field approval).

(3) If the hopper lid modification is not an approved design (STC or field approval), before further flight, remove the hopper lid installation.

Note 1: The Frontier-Aerospace Incorporated Models Fletcher FU–24 and Fletcher FU–24A airplanes do not have this unsafe condition and are not affected by this AD.

Note 2: The basic hopper installation for the Pacific Aerospace Limited Model FU24–954 airplane does not include a hopper lid due to the canopy sliding partly over the hopper inlet. A separate approval must be obtained to install a hopper lid.

FAA AD Differences

Note 3: This AD differs from the MCAI and/or service information as follows: No differences.

(g) Other FAA AD Provisions

The following provisions also apply to this AD:

(1) *Alternative Methods of Compliance (AMOCs):* The Manager, Standards Office, FAA, has the authority to approve AMOCs for this AD, if requested using the procedures found in 14 CFR 39.19. Send information to ATTN: Karl Schletzbaum, Aerospace Engineer, FAA, Small Airplane Directorate, 901 Locust, Room 301, Kansas City, Missouri 64106; *telephone:* (816) 329–4146; *fax:* (816)

329–4090; *email: karl.schletzbaum@faa.gov*. Before using any approved AMOC on any airplane to which the AMOC applies, notify your appropriate principal inspector (PI) in the FAA Flight Standards District Office (FSDO), or lacking a PI, your local FSDO.

(2) *Airworthy Product:* For any requirement in this AD to obtain corrective actions from a manufacturer or other source, use these actions if they are FAA-approved. Corrective actions are considered FAA-approved if they are approved by the State of Design Authority (or their delegated agent). You are required to assure the product is airworthy before it is returned to service.

(3) *Reporting Requirements:* For any reporting requirement in this AD, a federal agency may not conduct or sponsor, and a person is not required to respond to, nor shall a person be subject to a penalty for failure to comply with a collection of information subject to the requirements of the Paperwork Reduction Act unless that collection of information displays a current valid OMB Control Number. The OMB Control Number for this information collection is 2120–0056. Public reporting for this collection of information is estimated to be approximately 5 minutes per response, including the time for reviewing instructions, completing and reviewing the collection of information. All responses to this collection of information are mandatory. Comments concerning the accuracy of this burden and suggestions for reducing the burden should be directed to the FAA at: 800 Independence Ave. SW., Washington, DC 20591, Attn: Information Collection Clearance Officer, AES–200.

(h) Related Information

MCAI Civil Aviation Authority (CAA) AD DCA/FU24/180, dated July 28, 2011, for related information. You may review copies of the referenced service information at the FAA, Small Airplane Directorate, 901 Locust, Kansas City, Missouri 64106. For information on the availability of this material at the FAA, call (816) 329–4148.

(i) Material Incorporated by Reference

None.

Issued in Kansas City, Missouri, on November 2, 2011.

John Colomy,

Acting Manager, Small Airplane Directorate, Aircraft Certification Service.

[FR Doc. 2011–29045 Filed 11–9–11; 8:45 am]

BILLING CODE 4910–13–P

DEPARTMENT OF TRANSPORTATION

Federal Aviation Administration

14 CFR Part 39

[Docket No. FAA–2011–0721; Directorate Identifier 2010–NM–217–AD; Amendment 39–16861; AD 2011–23–10]

RIN 2120–AA64

Airworthiness Directives; ATR–GIE Avions de Transport Régional Airplanes

AGENCY: Federal Aviation Administration (FAA), Department of Transportation (DOT).

ACTION: Final rule.

SUMMARY: We are adopting a new airworthiness directive (AD) for certain Model ATR42 and ATR72 airplanes. This AD results from mandatory continuing airworthiness information (MCAI) originated by an aviation authority of another country to identify and correct an unsafe condition on an aviation product. The MCAI describes the unsafe condition as:

One ATR operator has experienced in-flight elevator travel limitations with unusual effort being necessary on pitch axis to control the aeroplane, while the ''pitch mistrim'' message appeared on the ADU [advisory display unit] display. The elevators seemed to be jammed.

During the post-flight inspection, it was discovered that the LH [left-hand] elevator lower stop assembly was broken at the level of the angles, which may have prevented the elevator to respond normally to the flight control input.

This condition, if not detected and corrected, could lead to reduced control of the aeroplane.

* * * * *

We are issuing this AD to require actions to correct the unsafe condition on these products.

DATES: This AD becomes effective December 15, 2011.

The Director of the Federal Register approved the incorporation by reference of certain publications listed in this AD as of December 15, 2011.

ADDRESSES: You may examine the AD docket on the Internet at *http://www.regulations.gov* or in person at the U.S. Department of Transportation, Docket Operations, M–30, West Building Ground Floor, Room W12–140, 1200 New Jersey Avenue SE., Washington, DC.

FOR FURTHER INFORMATION CONTACT: Tom Rodriguez, Aerospace Engineer, International Branch, ANM–116, Transport Airplane Directorate, FAA, 1601 Lind Avenue SW., Renton, Washington 98057–3356; telephone (425) 227–1137; fax (425) 227–1149.

SUPPLEMENTARY INFORMATION:

Discussion

We issued a notice of proposed rulemaking (NPRM) to amend 14 CFR part 39 to include an AD that would apply to the specified products. That NPRM was published in the **Federal Register** on August 5, 2011 (76 FR 47520). That NPRM proposed to correct an unsafe condition for the specified products. The MCAI states:

One ATR operator has experienced in-flight elevator travel limitations with unusual effort being necessary on pitch axis to control the aeroplane, while the ''pitch mistrim'' message appeared on the ADU display. The elevators seemed to be jammed.

During the post-flight inspection, it was discovered that the LH elevator lower stop assembly was broken at the level of the angles, which may have prevented the elevator to respond normally to the flight control input.

This condition, if not detected and corrected, could lead to reduced control of the aeroplane.

For the reasons described above, and as a precautionary measure, this [EASA] AD requires a one-time [general visual and detailed] inspection [for damaged angles] of the elevator hinge fittings and the reporting of all findings. Depending on the results, further action may be considered.

Corrective actions also include replacement of damaged angles with serviceable parts; and a detailed inspection of adjacent areas for damage, and repair if necessary. You may obtain further information by examining the MCAI in the AD docket.

Comments

We gave the public the opportunity to participate in developing this AD. We received no comments on the NPRM (76 FR 47520), August 5, 2011) or on the determination of the cost to the public.

Conclusion

We reviewed the available data and determined that air safety and the public interest require adopting the AD as proposed.

Differences Between This AD and the MCAI or Service Information

We have reviewed the MCAI and related service information and, in general, agree with their substance. But we might have found it necessary to use different words from those in the MCAI to ensure the AD is clear for U.S. operators and is enforceable. In making these changes, we do not intend to differ substantively from the information provided in the MCAI and related service information.

We might also have required different actions in this AD from those in the MCAI in order to follow our FAA policies. Any such differences are highlighted in a NOTE within the AD.

Costs of Compliance

We estimate that this AD will affect 86 products of U.S. registry. We also estimate that it will take about 4 work-hours per product to comply with the basic requirements of this AD. The average labor rate is $85 per work-hour. Based on these figures, we estimate the cost of this AD to the U.S. operators to be $29,240, or $340 per product.

In addition, we estimate that any necessary follow-on actions would take about 60 work-hours and require parts costing $960, for a cost of $6,060 per product. We have no way of determining the number of products that may need these actions.

Authority for This Rulemaking

Title 49 of the United States Code specifies the FAA's authority to issue rules on aviation safety. Subtitle I, section 106, describes the authority of the FAA Administrator. ''Subtitle VII: Aviation Programs,'' describes in more detail the scope of the Agency's authority.

We are issuing this rulemaking under the authority described in ''Subtitle VII, Part A, Subpart III, Section 44701: General requirements.'' Under that section, Congress charges the FAA with promoting safe flight of civil aircraft in air commerce by prescribing regulations for practices, methods, and procedures the Administrator finds necessary for safety in air commerce. This regulation is within the scope of that authority because it addresses an unsafe condition that is likely to exist or develop on products identified in this rulemaking action.

Regulatory Findings

We determined that this AD will not have federalism implications under Executive Order 13132. This AD will not have a substantial direct effect on the States, on the relationship between the national government and the States, or on the distribution of power and responsibilities among the various levels of government.

For the reasons discussed above, I certify this AD:

1. Is not a ''significant regulatory action'' under Executive Order 12866;

2. Is not a ''significant rule'' under the DOT Regulatory Policies and Procedures (44 FR 11034, February 26, 1979); and

3. Will not have a significant economic impact, positive or negative, on a substantial number of small entities under the criteria of the Regulatory Flexibility Act.

We prepared a regulatory evaluation of the estimated costs to comply with this AD and placed it in the AD docket.

Examining the AD Docket

You may examine the AD docket on the Internet at *http://www.regulations.gov;* or in person at the Docket Operations office between 9 a.m. and 5 p.m., Monday through Friday, except Federal holidays. The AD docket contains the NPRM (76 FR 47520, August 5, 2011), the regulatory evaluation, any comments received, and other information. The street address for the Docket Operations office (telephone (800) 647–5527) is in the **ADDRESSES** section. Comments will be available in the AD docket shortly after receipt.

List of Subjects in 14 CFR Part 39

Air transportation, Aircraft, Aviation safety, Incorporation by reference, Safety.

Adoption of the Amendment

Accordingly, under the authority delegated to me by the Administrator, the FAA amends 14 CFR part 39 as follows:

PART 39—AIRWORTHINESS DIRECTIVES

■ 1. The authority citation for part 39 continues to read as follows:

Authority: 49 U.S.C. 106(g), 40113, 44701.

§ 39.13 [Amended]

■ 2. The FAA amends § 39.13 by adding the following new AD:

2011–23–10 ATR–GIE Avions de Transport Régional: Amendment 39–16861. Docket No. FAA–2011–0721; Directorate Identifier 2010–NM–217–AD.

Effective Date

(a) This airworthiness directive (AD) becomes effective December 15, 2011.

Affected ADs

(b) None.

Applicability

(c) This AD applies to ATR–GIE Avions de Transport Régional Model ATR42–200, –300, –320, and –500 airplanes, all manufacturer serial numbers (MSN) up to MSN 643 inclusive; and Model ATR72–101, –102, –201, –202, –211, –212, and –212A airplanes, all MSNs up to MSN 728 inclusive; certificated in any category.

Subject

(d) Air Transport Association (ATA) of America Code 55: Stabilizers.

Reason

(e) The mandatory continuing airworthiness information (MCAI) states:

One ATR operator has experienced in-flight elevator travel limitations with unusual effort being necessary on pitch axis to control the aeroplane, while the ''pitch mistrim'' message appeared on the ADU [advisory display unit] display. The elevators seemed to be jammed.

During the post-flight inspection, it was discovered that the LH [left-hand] elevator lower stop assembly was broken at the level of the angles, which may have prevented the elevator to respond normally to the flight control input.

This condition, if not detected and corrected, could lead to reduced control of the aeroplane.

* * * * *

Compliance

(f) You are responsible for having the actions required by this AD performed within the compliance times specified, unless the actions have already been done.

Actions

(g) Within 6 months after the effective date of this AD, perform a general visual inspection of the inboard hinge fitting area and a detailed inspection of lower stop angles of the inboard hinge fittings on both LH and right-hand (RH) elevators, in accordance with the Accomplishment Instructions of Avions de Transport Régional Service Bulletin ATR42–55–0014, dated May 11, 2010; or Avions de Transport Régional Service Bulletin ATR72–55–1006, dated May 11, 2010; as applicable.

(1) If any damaged angle is found during the inspection required by paragraph (g) of this AD, before further flight, replace the damaged angles with serviceable parts and accomplish a detailed inspection of the adjacent areas to detect any damage, in accordance with the Accomplishment Instructions of Avions de Transport Régional Service Bulletin ATR42–55–0014, dated May 11, 2010; or Avions de Transport Régional Service Bulletin ATR72–55–1006, dated May 11, 2010; as applicable.

(2) If any damage is detected in adjacent areas during the inspection required by paragraph (g)(1) of this AD, before further flight, repair the damage using a method approved by either the Manager, International Branch, ANM–116, Transport Airplane Directorate, FAA; or European Aviation Safety Agency (EASA) (or its delegated agent).

(h) Submit a report of the findings (damaged angles found on the LH and RH side elevator) of the inspection required by paragraph (g) of this AD to ATR Engineering, Service Bulletin Group, 1 Allee Pierre Nadot, 31712 Blagnac Cedex, France, at the applicable time specified in paragraph (h)(1) or (h)(2) of this AD. The report must include the MSN, accomplishment date, registration number, number of flights, flight hours, inspection results, and performed actions. In addition, return any damaged lower stop angles to ATR Engineering, Service Bulletin Group, 1 Allee Pierre Nadot, 31712 Blagnac Cedex, France.

(1) If the inspection was done on or after the effective date of this AD: Submit the report within 30 days after the inspection.

(2) If the inspection was done before the effective date of this AD: Submit the report within 30 days after the effective date of this AD.

FAA AD Differences

Note 1: This AD differs from the MCAI and/or service information as follows: No differences.

Other FAA AD Provisions

(i) The following provisions also apply to this AD:

(1) *Alternative Methods of Compliance (AMOCs):* The Manager, International Branch, ANM–116, has the authority to approve AMOCs for this AD, if requested using the procedures found in 14 CFR 39.19. In accordance with 14 CFR 39.19, send your request to your principal inspector or local Flight Standards District Office, as appropriate. If sending information directly to the International Branch, send it to ATTN: Tom Rodriguez, Aerospace Engineer, International Branch, ANM–116, Transport Airplane Directorate, FAA, 1601 Lind Avenue SW., Renton, Washington 98057–3356; telephone (425) 227–1137; fax (425) 227–1149. Information may be emailed to: *9-ANM-116-AMOC-REQUESTS@faa.gov.* Before using any approved AMOC, notify your appropriate principal inspector, or lacking a principal inspector, the manager of the local flight standards district office/certificate holding district office. The AMOC approval letter must specifically reference this AD.

(2) *Airworthy Product:* For any requirement in this AD to obtain corrective actions from a manufacturer or other source, use these actions if they are FAA-approved. Corrective actions are considered FAA-approved if they are approved by the State of Design Authority (or their delegated agent). You are required to assure the product is airworthy before it is returned to service.

(3) *Reporting Requirements:* A federal agency may not conduct or sponsor, and a person is not required to respond to, nor shall a person be subject to a penalty for failure to comply with a collection of information subject to the requirements of the Paperwork Reduction Act unless that collection of information displays a current valid OMB Control Number. The OMB Control Number for this information collection is 2120–0056. Public reporting for this collection of information is estimated to be approximately 5 minutes per response, including the time for reviewing instructions, completing and reviewing the collection of information. All responses to this collection of information are mandatory. Comments concerning the accuracy of this burden and suggestions for reducing the burden should be directed to the FAA at: 800 Independence Ave. SW., Washington, DC 20591, Attn: Information Collection Clearance Officer, AES–200.

Related Information

(j) Refer to MCAI EASA Airworthiness Directive 2010–0138, dated July 1, 2010; Avions de Transport Régional Service Bulletin ATR42–55–0014, dated May 11, 2010; and Avions de Transport Régional Service Bulletin ATR72–55–1006, dated May 11, 2010; for related information.

Material Incorporated by Reference

(k) You must use Avions de Transport Régional Service Bulletin ATR42–55–0014, dated May 11, 2010; or Avions de Transport Régional Service Bulletin ATR72–55–1006, dated May 11, 2010; as applicable; to do the actions required by this AD, unless the AD specifies otherwise.

(1) The Director of the Federal Register approved the incorporation by reference of this service information under 5 U.S.C. 552(a) and 1 CFR part 51.

(2) For service information identified in this AD, contact ATR—GIE Avions de Transport Régional, 1, Allée Pierre Nadot, 31712 Blagnac Cedex, France; telephone +33 (0) 5 62 21 62 21; fax +33 (0) 5 62 21 67 18; email *continued.airworthiness@atr.fr;* Internet *http://www.aerochain.com.*

(3) You may review copies of the service information at the FAA, Transport Airplane Directorate, 1601 Lind Avenue SW., Renton, Washington. For information on the availability of this material at the FAA, call (425) 227–1221.

(4) You may also review copies of the service information that is incorporated by reference at the National Archives and Records Administration (NARA). For information on the availability of this material at NARA, call (202) 741–6030, or go to: *http://www.archives.gov/federal_register/code_of_federal_regulations/ibr_locations.html.*

Issued in Renton, Washington, on October 27, 2011.

Kalene C. Yanamura,

Acting Manager, Transport Airplane Directorate, Aircraft Certification Service.

[FR Doc. 2011–28752 Filed 11–9–11; 8:45 am]

BILLING CODE 4910–13–P

DEPARTMENT OF TRANSPORTATION

Federal Aviation Administration

14 CFR Part 39

[Docket No. FAA–2011–1158; Directorate Identifier 2010–SW–018–AD; Amendment 39–16847; AD 2011–22–05]

RIN 2120–AA64

Airworthiness Directives; Eurocopter France Model AS350B, B1, B2, B3, BA, C, D, and D1; and AS355E, F, F1, F2, N, and NP Helicopters

AGENCY: Federal Aviation Administration (FAA), DOT.

ACTION: Final rule; request for comments.

SUMMARY: This amendment supersedes an existing airworthiness directive (AD) for the Eurocopter France (Eurocopter) Model AS350B, B1, B2, B3, BA, C, D, and D1 helicopters; and Model AS355E, F, F1, F2, and N helicopters with certain tail rotor pitch control rods installed. That AD requires a daily check of the tail rotor (T/R) pitch control rod (control rod) outboard spherical bearing (bearing) for play. If play exists, that AD requires measuring the bearing's radial and axial play. Since that AD was issued, an incident occurred where the pilot of a Model AS350 helicopter felt vibrations in the anti-torque pedal in flight, resulting in a precautionary landing. An investigation determined that the control rod showed extensive wear on the ball-joint. This superseding AD maintains the requirements of the existing AD, and expands the applicability to include the Model AS355NP helicopter and additional part-numbered control rods. The actions specified by this AD are intended to prevent failure of a control rod, loss of T/R control, and subsequent loss of control of the helicopter.

DATES: Effective November 25, 2011.

Comments for inclusion in the Rules Docket must be received on or before January 9, 2012.

ADDRESSES: Use one of the following addresses to submit comments on this AD:

- *Federal eRulemaking Portal:* Go to *http://www.regulations.gov.* Follow the instructions for submitting comments.
- *Fax:* (202) 493–2251.
- *Mail:* U.S. Department of Transportation, Docket Operations, M–30, West Building Ground Floor, Room W12–140, 1200 New Jersey Avenue SE., Washington, DC 20590.
- *Hand Delivery:* U.S. Department of Transportation, Docket Operations, M–30, West Building Ground Floor, Room W12–140, 1200 New Jersey Avenue SE., Washington, DC 20590, between 9 a.m. and 5 p.m., Monday through Friday, except Federal holidays.

You may get the service information identified in this AD from American Eurocopter Corporation, 2701 N. Forum Drive, Grand Prairie, TX 75052, *telephone* (972) 641–0000 or (800) 232–0323, *fax* (972) 641–3775, or at *http://www.eurocopter.com/techpub.*

Examining the Docket: You may examine the docket that contains the AD, any comments, and other information on the Internet at *http://www.regulations.gov,* or in person at the Docket Operations office between 9 a.m. and 5 p.m., Monday through Friday, except Federal holidays. The Docket Operations office (telephone (800) 647–5527) is located in Room W12–140 on the ground floor of the West Building at the street address stated in the **ADDRESSES** section. Comments will be available in the AD docket shortly after receipt.

FOR FURTHER INFORMATION CONTACT: Jim Grigg, Manager, FAA, Rotorcraft Directorate, Safety Management Group, 2601 Meacham Blvd., Fort Worth, TX 76137, *telephone* (817) 222–5126, *fax* (817) 222–5961.

SUPPLEMENTARY INFORMATION:

Discussion

On October 22, 2003, the FAA issued AD 2003–22–06, Amendment 39–13354 (68 FR 61608, October 29, 2003), Docket 2000–SW–12–AD (AD 2003–22–06), for Eurocopter Model AS350B, B1, B2, B3, BA, C, D, and D1; and Model AS355E, F, F1, F2, and N helicopters with control rods, part-number (P/N) 350A33–2145–00 or 350A33–2145–01, which superseded AD 98–24–35, Amendment 39–10921 (63 FR 66418, December 2, 1998), Docket 98–SW–41–AD, issued November 19, 1998 (AD 98–24–35). AD 98–24–35 required a recurring inspection to measure the control rod bearing for radial and axial play. That action was prompted by an accident and separate incident involving Model AS350B2 helicopters, and investigations revealed a broken control rod on the helicopter that was involved in the accident, and a severely worn control rod on the helicopter involved in the incident. There were two other unconfirmed incidents cited by the National Transportation Safety Board (based on the manufacturer's reports) involving the same control rod, P/N 350A33–2145–01. AD 2003–22–06 superseded AD 98–24–35, and requires a daily check of the control rod bearing, allows a larger axial play limit, and requires a more frequent inspection interval once play is found in the control rod bearing during a daily check. AD 2003–22–06 also added the Eurocopter Model AS350B3 helicopter and another part-numbered control rod to the applicability. AD 2003–22–06 was prompted by a review of additional service information and public comments regarding the requirements of AD 98–24–35. The actions specified by AD 2003–22–06 are intended to prevent separation of the bearing ball from its outer race, rubbing of the body of the control rod against the tail rotor blade pitch horn clevis, failure of a control rod, loss of T/R control, and subsequent loss of control of the helicopter.

Actions Since Issuing Previous AD

Since issuing AD 2003–22–06 (68 FR 61608, October 29, 2003), the European Aviation Safety Agency (EASA), which is the Technical Agent for the Member States of the European Union, has issued EASA AD No. 2010–0006, dated January 7, 2010, to correct an unsafe condition for the Eurocopter Model AS350B, B1, B2, B3, BA, BB, and D helicopters; and Model AS355E, F, F1, F2, and N, and NP helicopters with control rods, P/N 350A33–2100–00, –01, –02, –03, or –04; P/N 350A33–2121–00, –01, or –02; P/N 350A33–2143–00; or P/N 350A33–2145–00 or –01. EASA advises that a pilot of a Eurocopter Model AS350 helicopter felt slight vibrations in the pedal unit in flight. A few minutes later, the vibration level increased and the pilot carried out a precautionary autorotation landing. After landing, it was discovered that one TR pitch-change link was damaged, the tailboom cone was missing, and there was an impact mark on the tailboom. Further investigation revealed the affected TR pitch-change link showed extensive wear on the ball-joint. EASA advises that this condition, if not detected and corrected, could lead to loss of the anti-torque function and possible loss of control of the helicopter.

In addition, after further review of the language used to describe the unsafe condition addressed in AD 2003–22–06 (68 FR 61608, October 29, 2003), it has been determined that changes are needed in terminology to more accurately describe the unsafe condition that this AD is intending to correct.

Related Service Information

Eurocopter has issued Alert Service Bulletin (ASB) No. 05.00.60 for the Model AS350 series helicopters, and ASB No. 05.00.56 for the Model AS355 series helicopters, both dated December 9, 2009. These ASBs specify performing an initial and recurring check for play in the pitch-change links. If axial play in the ball-joint is detectable, the ASBs specify removing the pitch-change link and measuring the bearing wear using a dial indicator. The EASA classified these ASBs as mandatory and issued EASA AD No. 2010–0006 to ensure the continued airworthiness of these helicopters.

FAA's Determination and Requirements of This AD

These helicopters have been approved by the aviation authority of France and are approved for operation in the United States. Pursuant to our bilateral agreement with France, EASA, their technical representative, has notified us of the unsafe condition described in the EASA AD. We are issuing this AD because we evaluated all information provided by EASA and determined the unsafe condition exists and is likely to exist or develop on other helicopters of these same type designs. Therefore, this AD is being issued to prevent failure of a control rod, loss of tail rotor control, and subsequent loss of control of the helicopter. This AD requires the following actions:

- Before the first flight of each day, check the control rod bearing for play on the helicopter, by observation and feel, by slightly moving the TR blade in the flapping axis while monitoring the bearing for movement. This action may be performed by an owner/operator (pilot) holding at least a private pilot certificate, and must be entered into the helicopter maintenance records in accordance with 14 CFR 43.9(a)(1)–(4) and 91.417(a)(2)(v). A pilot may perform this check because it involves only a visual and physical check of the control rod for play, and can be performed equally well by a pilot or a mechanic. If play is detected, a mechanic must remove the control rod from the helicopter, and using a dial indicator, measure the control rod bearing wear. If the radial play exceeds 0.008 inch or axial play exceeds 0.016 inch, the control rod must be replaced with an airworthy control rod before further flight.
- Thereafter, at recurring intervals not to exceed 30 hours time-in-service (TIS), remove the control rod and measure the bearing wear using a dial indicator. If the radial play exceeds 0.008 inch or axial play exceeds 0.016 inch, replace the control rod with an airworthy control rod before further flight.

The short compliance time involved, before the first flight of each day, is required because the previously described critical unsafe condition can adversely affect the controllability of the helicopter. Therefore, this AD must be issued immediately. Since a situation exists that requires the immediate adoption of this regulation, it is found that notice and opportunity for prior public comment hereon are impracticable, and that good cause exists for making this amendment effective in less than 30 days.

Differences Between This AD and the EASA AD

This AD differs from the EASA AD as follows:

- This AD includes the Model AS350C and AS350D1 helicopters, as they may have the same control rod; this AD does not include the Model AS350BB because it does not have an FAA-issued type certificate.
- This AD uses the term ''T/R pitch control rod'' and the EASA AD uses the term ''T/R pitch change link'' to describe the same part.
- This AD uses the term ''loss of T/R control'' to describe the unsafe condition, and the EASA AD uses the term ''loss of anti-torque control.''

• This AD uses the term ''hours TIS'' to describe compliance times, and the EASA AD uses the term ''flight hours.''

• This AD requires either a pilot/operator or mechanic, before the first flight of each day, to perform a check or inspection of the bearing for play. If play is found, a mechanic must, before further flight, measure the bearing play, and thereafter measure the bearing play at intervals not to exceed 30 hours TIS. The EASA AD requires a mechanic, within 30 flight hours, to perform an initial inspection to measure the bearing play, and thereafter, at intervals not to exceed 30 flight hours. The EASA AD does not require a daily check.

Costs of Compliance

We estimate that this AD will affect about 733 helicopters of U.S. registry. We estimate, per helicopter, it will take minimal work-hours to do the daily check, 1 work-hour to do the recurring inspection, and 1 work-hour to replace 1 control rod. The average labor rate is $85 per work-hour. Required parts will cost about $1,724 to replace a control rod per helicopter. Based on these figures, we estimate the cost of this AD on U.S. operators is $1,949,047 per year, assuming 10 recurring inspections per year per helicopter, and assuming 1 control rod is replaced per year per helicopter.

Comments Invited

This AD is a final rule that involves requirements that affect flight safety and was not preceded by notice and an opportunity for public comment; however, we invite you to submit any written data, views, or arguments regarding this AD. Send your comments to an address listed under **ADDRESSES**. Include ''Docket No. FAA–2011–1158; Directorate Identifier 2010–SW–018–AD'' at the beginning of your comments. We specifically invite comments on the overall regulatory, economic, environmental, and energy aspects of this AD. We will consider all comments received by the closing date and may amend this AD because of those comments.

We will post all comments we receive, without change, to *http://www.regulations.gov,* including any personal information you provide. We will also post a report summarizing each substantive verbal contact with FAA personnel concerning this AD. Using the search function of the docket Web site, you can find and read the comments to any of our dockets, including the name of the individual who sent the comment. You may review the DOT's complete Privacy Act Statement in the **Federal Register** published on April 11, 2000 (65 FR 19476).

Regulatory Findings

We have determined that this AD will not have federalism implications under Executive Order 13132. This AD will not have a substantial direct effect on the States, on the relationship between the national Government and the States, or on the distribution of power and responsibilities among the various levels of government.

For the reasons discussed above, I certify that the regulation:

1. Is not a ''significant regulatory action'' under Executive Order 12866;

2. Is not a ''significant rule'' under the DOT Regulatory Policies and Procedures (44 FR 11034, February 26, 1979);

3. Will not affect intrastate aviation in Alaska to the extent that it justifies making a regulatory distinction; and

4. Will not have a significant economic impact, positive or negative, on a substantial number of small entities under the criteria of the Regulatory Flexibility Act.

We prepared an economic evaluation of the estimated costs to comply with this AD. See the AD docket to examine the economic evaluation.

Authority for This Rulemaking

Title 49 of the United States Code specifies the FAA's authority to issue rules on aviation safety. Subtitle I, Section 106, describes the authority of the FAA Administrator. Subtitle VII, Aviation Programs, describes in more detail the scope of the Agency's authority.

We are issuing this rulemaking under the authority described in Subtitle VII, Part A, Subpart III, Section 44701, ''General requirements.'' Under that section, Congress charges the FAA with promoting safe flight of civil aircraft in air commerce by prescribing regulations for practices, methods, and procedures the Administrator finds necessary for safety in air commerce. This regulation is within the scope of that authority because it addresses an unsafe condition that is likely to exist or develop on products identified in this rulemaking action.

List of Subjects in 14 CFR Part 39

Air transportation, Aircraft, Aviation safety, Incorporation by reference, Safety.

Adoption of the Amendment

Accordingly, under the authority delegated to me by the Administrator, the FAA amends 14 CFR part 39 as follows:

PART 39—AIRWORTHINESS DIRECTIVES

■ 1. The authority citation for part 39 continues to read as follows:

Authority: 49 U.S.C. 106(g), 40113, 44701.

§ 39.13 [Amended]

■ 2. The FAA amends § 39.13 by removing Amendment 39–13354 (68 FR 61608; October 29, 2003), and adding the following new Airworthiness Directive (AD):

2011–22–05 EUROCOPTER FRANCE (EUROCOPTER): Amendment 39–16847; Docket No. FAA–2011–1158; Directorate Identifier 2010–SW–018–AD; supersedes AD 2003–22–06, issued October 22, 2003 (68 FR 61608; October 29, 2003), Amendment 39–13354, Docket No. 2000–SW–12–AD.

Applicability: Eurocopter Model AS350B, B1, B2, B3, BA, C, D, D1; and Model AS355E, F, F1, F2, N, and NP helicopters; with tail rotor (T/R) pitch control rod (control rod), part number (P/N) 350A33–2100–00, –01, –02, –03, –04; P/N 350A33–2121–00, –01, –02; P/N 350A33–2143–00; or P/N 350A33–2145–00 or –01, installed; certificated in any category.

Compliance: Required as indicated.

To prevent failure of a T/R control rod, loss of T/R control, and subsequent loss of control of the helicopter, accomplish the following:

(a) Before the first flight of each day, place the T/R pedals in the neutral position. If the helicopter is fitted with a T/R load compensator, discharge the accumulator as described in the rotorcraft flight manual. Check the control rod bearing (bearing) for play on the helicopter, by observation and feel, by slightly moving the T/R blade in the flapping axis while monitoring the bearing for movement. See the following Figure 1 of this AD. The actions required by this paragraph may be performed by the owner/operator (pilot) holding at least a private pilot certificate, and must be entered into the helicopter maintenance records showing compliance with this AD in accordance with 14 CFR 43.9(a)(1)–(4) and 14 CFR 91.417(a)(2)(v). The record must be maintained as required by 14 CFR 91.173, 121.380, or 135.439.

BILLING CODE 4910–13–P

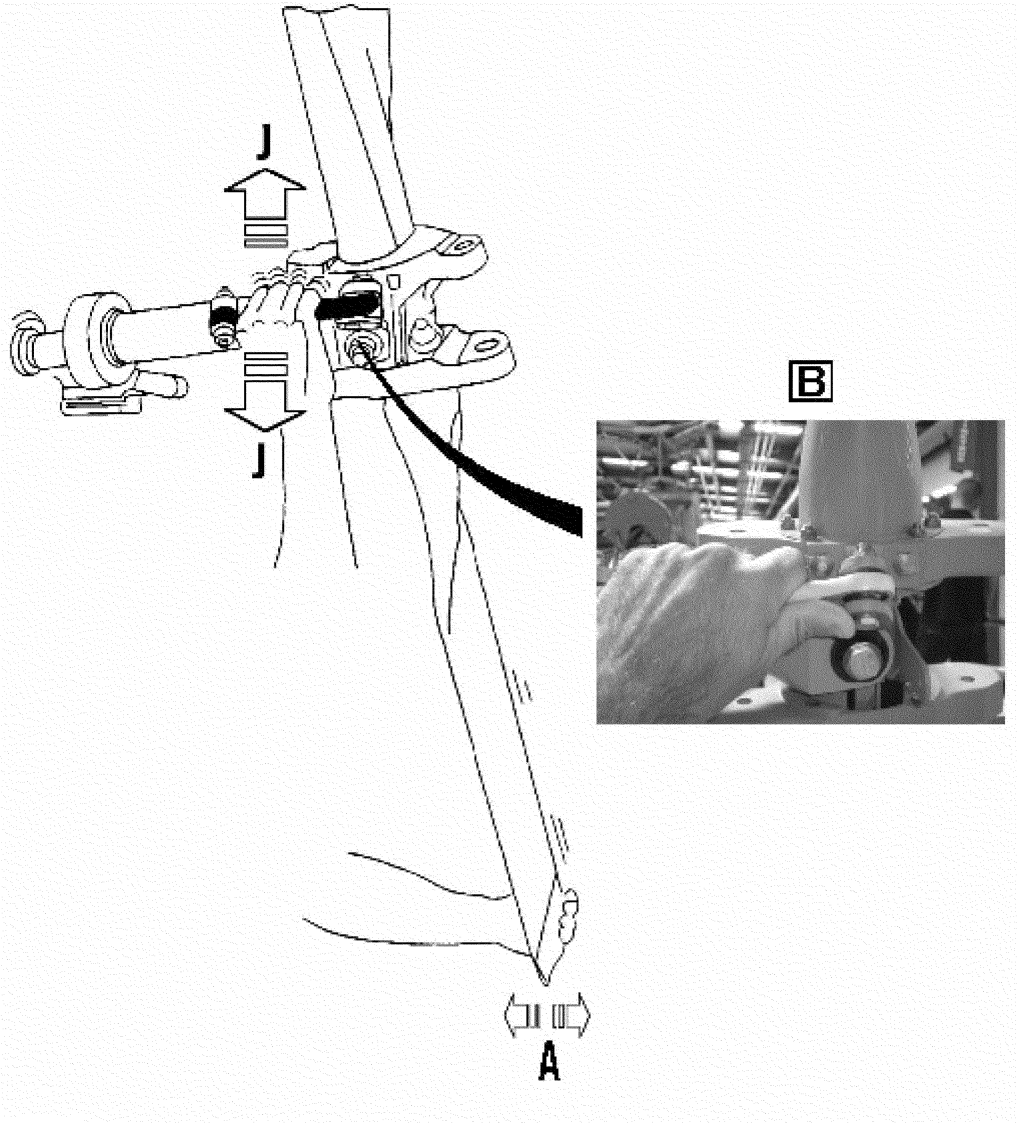

Figure 1: Manual Check for Play of the Tail Rotor Pitch Control Rod

(b) If the Teflon cloth is coming out of its normal position within the bearing, totally or partially, or if there is discoloration or scoring on the bearing, before further flight, replace the control rod with an airworthy control rod.

(c) If a pilot or mechanic detects play, a mechanic must remove the control rod from the helicopter, and using a dial indicator, measure the bearing wear according to the following and as shown in Figures 2 and 3 of this AD:

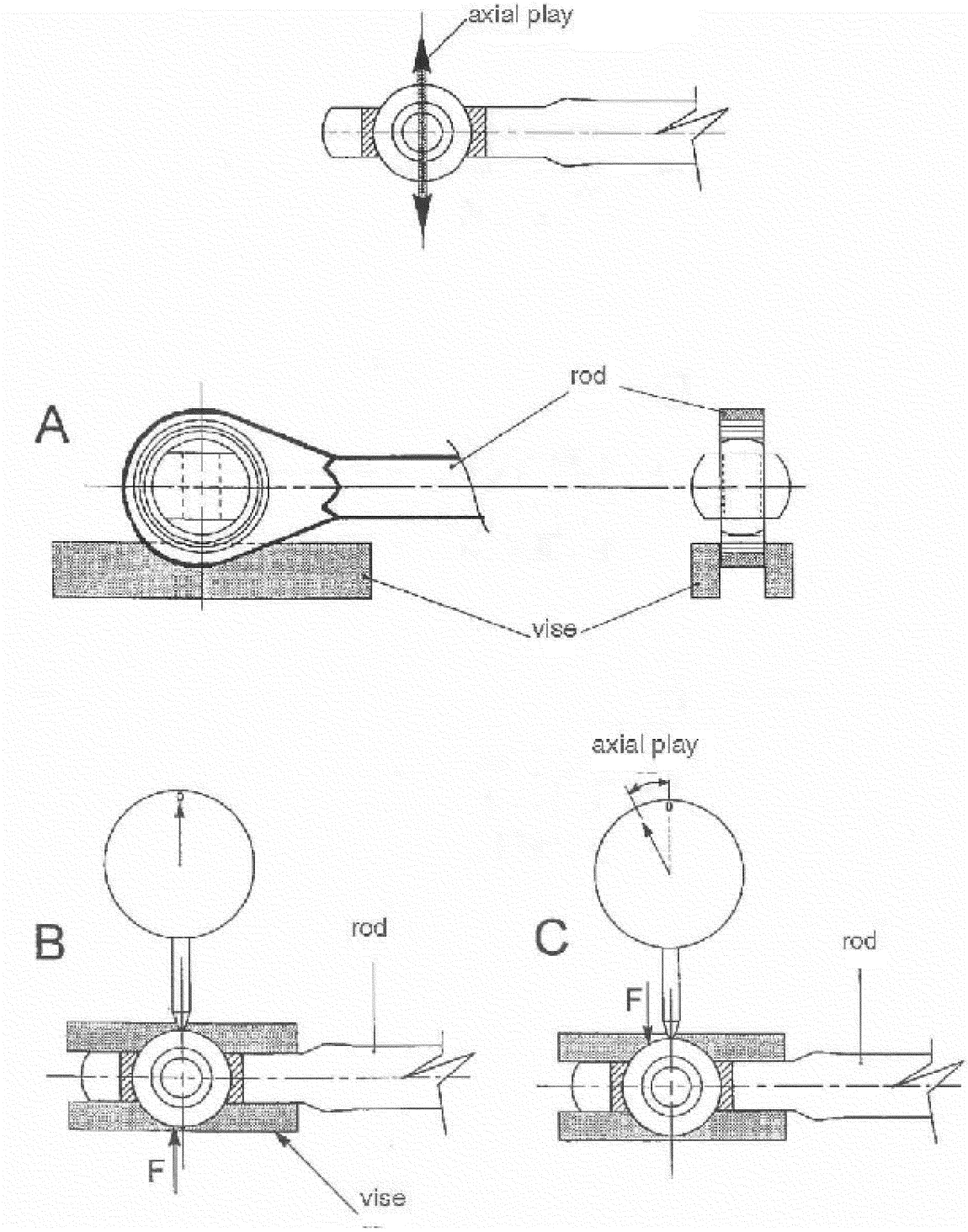

Figure 2: Measurement of the Axial Play (A) of the Bearing

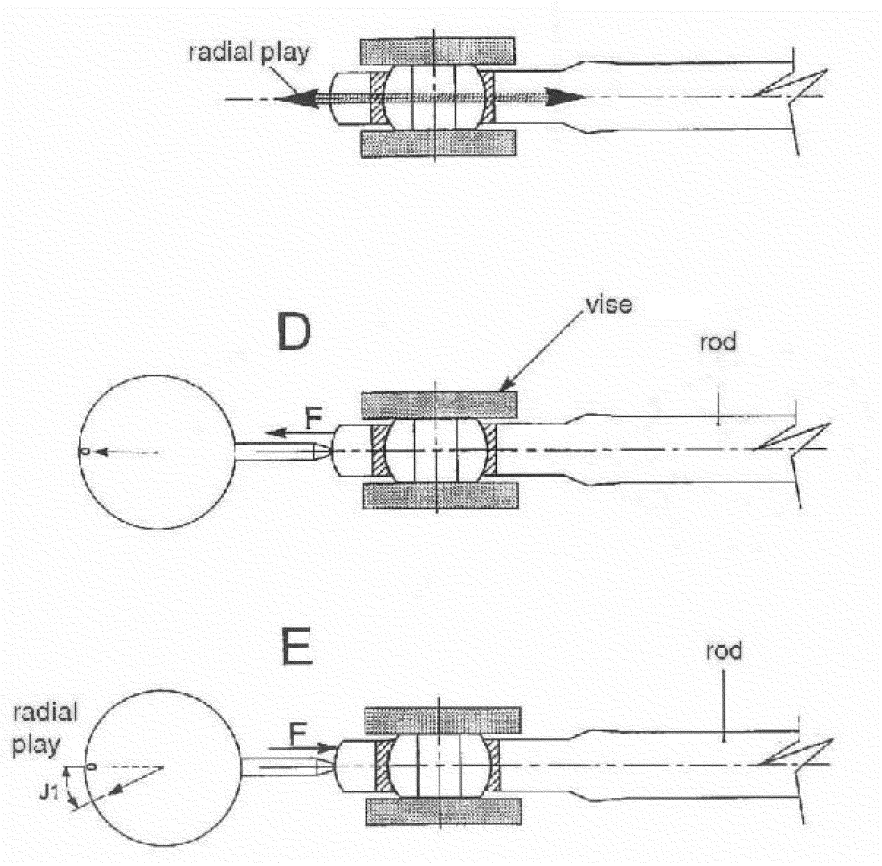

Figure 3: Measurement of the Radial Play (R) of the Bearing

BILLING CODE 4910–13–C

(1) Remove the control rod from the helicopter.

(2) Mount the control rod in a vise as shown in Figure 2 of this AD.

(3) Using a dial indicator, take axial play readings by moving the spherical bearing in the direction F (up and down) as shown in Figure 2 of this AD.

(4) Install a bolt through the bearing and secure it with a washer and nut to provide a clamping surface when the bearing is clamped in a vise.

(5) Mount the control rod and bearing in a vise as shown in Figure 3 of this AD.

(6) Using a dial indicator, take radial play measurements by moving the control rod in the direction F as shown in Figure 3 of this AD.

(7) Record the hours of operation on each control rod.

(8) If the radial play exceeds 0.008 inch or axial play exceeds 0.016 inch, replace the control rod with an airworthy control rod before further flight.

(9) If the radial and axial play are within limits, reinstall the control rod.

(10) Thereafter, at intervals not to exceed 30 hours time-in-service, remove the control rod and measure the bearing play with a dial indicator in accordance with paragraph (c) of this AD.

(d) To request a different method of compliance or a different compliance time for this AD, follow the procedures in 14 CFR 39.19. Contact the Manager, Safety Management Group, DOT/FAA, ATTN: Jim Grigg, Manager, Rotorcraft Directorate, 2601 Meacham Blvd., Fort Worth, TX 76137, *telephone* (817) 222–5126, *fax* (817) 222–5961, for information about previously approved alternative methods of compliance.

(e) The Joint Aircraft System/Component Code is 6720: Tail rotor control system.

(f) This amendment becomes effective on November 25, 2011.

Note: The subject of this AD is addressed in European Aviation Safety Agency (France) AD No. 2010–0006, dated January 7, 2010.

Issued in Fort Worth, Texas, on October 12, 2011.

Lance T. Gant,

Acting Manager, Rotorcraft Directorate, Aircraft Certification Service.

[FR Doc. 2011–27774 Filed 11–9–11; 8:45 am]

BILLING CODE 4910–13–P

DEPARTMENT OF TRANSPORTATION

Federal Aviation Administration

14 CFR Part 71

[Docket No. FAA–2011–0496; Airspace Docket No. 11–AWP–6]

Establishment of Class D and Amendment of Class E Airspace; Los Angeles, CA

AGENCY: Federal Aviation Administration (FAA), DOT.

ACTION: Final rule.

SUMMARY: This action establishes Class D airspace at Los Angeles International Airport, Los Angeles, CA. Controlled airspace is necessary to contain potential missed approaches at Los Angeles International Airport. This action enhances the safety and management of aircraft operations at the airport. This action also edits Class E airspace by adding the geographic coordinates and the airport name to the airspace designation.

DATES: Effective date, 0901 UTC, December 15, 2011. The Director of the Federal Register approves this

incorporation by reference action under 1 CFR part 51, subject to the annual revision of FAA Order 7400.9 and publication of conforming amendments.

FOR FURTHER INFORMATION CONTACT: Eldon Taylor, Federal Aviation Administration, Operations Support Group, Western Service Center, 1601 Lind Avenue SW., Renton, WA 98057; *telephone* (425) 203–4537.

SUPPLEMENTARY INFORMATION:

History

On June 17, 2011, the FAA published in the **Federal Register** a notice of proposed rulemaking to amend controlled airspace at Los Angeles, CA (76 FR 35369). Interested parties were invited to participate in this rulemaking effort by submitting written comments on the proposal to the FAA. The FAA received four comments.

One commenter had concerns about losing their hang gliding training area. While there is no change to existing hang gliding operations, a Letter of Agreement between Los Angeles Air Traffic Control Tower and hang gliding operators will be initiated once the rule is adopted.

Two commenters are opposed in general to the establishment of Class D airspace adjacent to Los Angeles Class B airspace. As proposed, the Class D design area is intended to minimize the airspace reclassified, yet contain potential operations at Los Angeles International Airport, and is of sufficient size to allow for safe and efficient handling of these operations.

One commenter had several concerns and suggestions; one suggestion was to pursue non-rulemaking alternatives. Two concerns were that published missed approach procedures are not used because they conflict with other aircraft and operations; and alternate missed approach procedures are ''ad-hoc'' procedures. Firstly, the FAA considered non-rulemaking solutions but found they did not provide the equivalent level of safety as would Class D airspace. Secondly, both standard and alternate missed approach procedures are used as appropriate to ensure the safety of arriving and departing aircraft. Alternate missed approach instructions may be required in addition to published missed approach procedures to ensure that during unplanned missed approaches or unusual traffic situations, aircraft remain safely separated.

The commenter was also concerned that the proposal does not address all Los Angeles International Airport Class B airspace containment issues. The Los Angeles Class B airspace area is currently under review to specifically address aircraft containment issues. The Class D proposal has been designed to address specific safety concerns involving large turbojet aircraft operations in Class E airspace adjacent to Los Angles International Airport. Currently, non-participating aircraft may fly in close proximity to arriving and departing Instrument Flight Rules (IFR) aircraft in this Class E airspace. The establishment of the Los Angeles International Airport Class D airspace area may be incorporated into the future Los Angeles Class B airspace design proposal.

Another concern was frequency congestion. The FAA found that pilot, controller workload and frequency congestion are not impacted by this proposal as all alternate missed approach instructions currently require this communication. Also of concern was that the FAA pursues a full review, including a redesign of the Los Angeles Class B airspace. The FAA agrees that a redesign of the Los Angeles Class B airspace area may provide a unified airspace utilization solution in the Los Angeles Basin. This redesign will be pursued in accordance with Joint Order (JO) 7400.2H, Procedures for Handling Airspace Matters, as part of the ongoing Los Angeles Basin airspace review.

This action also amends Class E airspace to include the airport name and geographic coordinates in the airspace designation. With the exception of editorial changes, this rule is the same as that proposed in the NPRM.

Class D and Class E airspace designations are published in paragraphs 5000 and 6005, respectively, of FAA Order 7400.9V dated August 9, 2011, and effective September 15, 2011, which is incorporated by reference in 14 CFR 71.1. The Class D and Class E airspace designations listed in this document will be published subsequently in that Order.

The Rule

This action amends Title 14 Code of Federal Regulations (14 CFR) Part 71 by establishing Class D airspace at Los Angeles International Airport, Los Angeles, CA, for containment of potential missed approaches at Los Angeles International Airport. This action is based on the results of a study conducted by the Los Angeles VFR Task Force, and the Los Angeles Class B Workgroup. This action further enhances the safety and management of aircraft operations at the airport. This action also amends Class E airspace extending upward from 700 feet above the surface by adding ''Los Angeles International Airport, CA'' and ''lat. 33°56'33'' N., long. 118°24'26'' W.'' to the airspace designation.

The FAA has determined this regulation only involves an established body of technical regulations for which frequent and routine amendments are necessary to keep them operationally current. Therefore, this regulation: (1) Is not a ''significant regulatory action'' under Executive Order 12866; (2) is not a ''significant rule'' under DOT Regulatory Policies and Procedures (44 FR 11034; February 26, 1979); and (3) does not warrant preparation of a regulatory evaluation as the anticipated impact is so minimal. Since this is a routine matter that will only affect air traffic procedures and air navigation, it is certified this rule, when promulgated, will not have a significant economic impact on a substantial number of small entities under the criteria of the Regulatory Flexibility Act. The FAA's authority to issue rules regarding aviation safety is found in Title 49 of the U.S. Code. Subtitle 1, Section 106 discusses the authority of the FAA Administrator. Subtitle VII, Aviation Programs, describes in more detail the scope of the agency's authority. This rulemaking is promulgated under the authority described in Subtitle VII, Part A, Subpart I, Section 40103. Under that section, the FAA is charged with prescribing regulations to assign the use of airspace necessary to ensure the safety of aircraft and the efficient use of airspace. This regulation is within the scope of that authority as it establishes additional controlled airspace at Los Angeles International Airport, Los Angeles, CA.

List of Subjects in 14 CFR Part 71

Airspace, Incorporation by reference, Navigation (air).

Adoption of the Amendment

In consideration of the foregoing, the Federal Aviation Administration amends 14 CFR part 71 as follows:

PART 71—DESIGNATION OF CLASS A, B, C, D AND E AIRSPACE AREAS; AIR TRAFFIC SERVICE ROUTES; AND REPORTING POINTS

■ 1. The authority citation for 14 CFR part 71 continues to read as follows:

Authority: 49 U.S.C. 106(g), 40103, 40113, 40120; E. O. 10854, 24 FR 9565, 3 CFR, 1959–1963 Comp., p. 389.

§ 71.1 [Amended]

■ 2. The incorporation by reference in 14 CFR 71.1 of the Federal Aviation Administration Order 7400.9V, Airspace Designations and Reporting Points, dated August 9, 2011, and effective

September 15, 2011 is amended as follows:

Paragraph 5000 Class D airspace.

* * * * *

AWP CA D Los Angeles, CA [New]

Los Angeles International Airport, CA
(Lat. 33°56′33″ N., long. 118°24′26″ W.)
Santa Monica Municipal Airport, CA
(Lat. 34°00′57″ N., long. 118°27′05″ W.)

That airspace extending upward from the surface to and including 2,700 feet MSL bounded by a line beginning at lat. 33°57′42″ N., long. 118°27′23″ W.; to lat. 33°58′18″ N., long. 118°26′24″ W.; then via the 2.7-mile radius of the Santa Monica Municipal Airport counterclockwise to lat. 34°00′00″ N., long. 118°24′02″ W.; to lat. 34°00′00″ N., long. 118°22′58″ W.; to lat. 33°57′42″ N., long. 118°22′10″ W., thence to the point of beginning. That airspace extending upward from the surface to and including 2,500 feet MSL bounded by a line beginning at lat. 33°55′50″ N., long. 118°22′06″ W.; to lat. 33°54′16″ N., long. 118°24′17″ W.; to lat. 33°52′47″ N., long. 118°26′22″ W.; to lat. 33°55′51″ N., long. 118°26′05″ W., thence to the point of beginning. This Class D airspace area is effective during the specific dates and times established in advance by a Notice to Airmen. The effective date and time will thereafter be continuously published in the Airport/Facility Directory.

Paragraph 6005 Class E airspace areas extending upward from 700 feet or more above the surface of the earth.

* * * * *

AWP CA E5 Los Angeles, CA [Amended]

Los Angeles International Airport, CA
(Lat. 33°56′33″ N., long. 118°24′26″W.)

That airspace extending upward from 700 feet above the surface bounded by a line beginning at lat. 34°05′00″ N., long. 118°33′03″ W.; to lat. 34°05′00″ N., long. 118°15′03″ W.; to lat. 34°00′00″ N., long. 118°15′03″ W.; to lat. 34°00′00″ N., long. 118°07′03″ W.; to lat. 33°56′00″ N., long. 118°07′03″ W.; to lat. 33°56′00″ N., long. 117°53′03″ W.; to lat. 33°46′00″ N., long. 117°45′03″ W.; to lat. 33°39′00″ N., long. 117°30′03″ W.; to lat. 33°30′00″ N., long. 117°30′03″ W.; to lat. 33°30′00″ N., long. 117°45′03″ W.; to lat. 33°42′00″ N., long. 118°09′03″ W.; to lat. 33°42′00″ N., long. 118°26′03″ W.; to lat. 33°48′00″ N., long. 118°26′03″ W.; to lat. 33°53′00″ N., long. 118°33′03″ W., thence to the point of beginning. That airspace extending upward from 1,200 feet above the surface bounded by a line beginning at lat. 34°00′00″ N., long. 119°05′03″ W.; to lat. 34°00′00″ N., long. 118°33′03″ W.; to lat. 34°05′00″ N., long. 118°33′03″ W.; to lat. 34°05′00″ N., long. 117°59′03″ W.; to lat. 33°56′00″ N., long. 117°59′03″ W.; to lat. 33°56′00″ N., long. 117°53′03″ W.; to lat. 33°46′00″ N., long. 117°45′03″ W.; to lat. 33°39′00″ N., long. 117°30′03″ W.; to lat. 33°30′00″ N., long. 117°30′03″ W.; to lat. 33°30′00″ N., long. 118°34′03″ W.; to lat. 33°28′30″ N., long. 118°34′03″ W.; to lat. 33°28′30″ N., long. 119°07′03″ W.; to lat. 33°52′03″ N., long. 119°07′02″ W., thence to the point of beginning.

Issued in Seattle, Washington, on November 2, 2011.

Robert Henry,

Acting Manager, Operations Support Group, Western Service Center

[FR Doc. 2011–29122 Filed 11–9–11; 8:45 am]

BILLING CODE 4910–13–P

DEPARTMENT OF TRANSPORTATION

Federal Aviation Administration

14 CFR Part 97

[Docket No. 30810; Amdt. No. 3450]

Standard Instrument Approach Procedures, and Takeoff Minimums and Obstacle Departure Procedures; Miscellaneous Amendments

AGENCY: Federal Aviation Administration (FAA), DOT.

ACTION: Final rule.

SUMMARY: This rule establishes, amends, suspends, or revokes Standard Instrument Approach Procedures (SIAPs) and associated Takeoff Minimums and Obstacle Departure Procedures for operations at certain airports. These regulatory actions are needed because of the adoption of new or revised criteria, or because of changes occurring in the National Airspace System, such as the commissioning of new navigational facilities, adding new obstacles, or changing air traffic requirements. These changes are designed to provide safe and efficient use of the navigable airspace and to promote safe flight operations under instrument flight rules at the affected airports.

DATES: This rule is effective November 10, 2011. The compliance date for each SIAP, associated Takeoff Minimums, and ODP is specified in the amendatory provisions.

The incorporation by reference of certain publications listed in the regulations is approved by the Director of the Federal Register as of November 10, 2011.

ADDRESSES: Availability of matters incorporated by reference in the amendment is as follows:

For examination—

1. FAA Rules Docket, FAA Headquarters Building, 800 Independence Avenue SW., Washington, DC 20591;

2. The FAA Regional Office of the region in which the affected airport is located;

3. The National Flight Procedures Office, 6500 South MacArthur Blvd., Oklahoma City, OK 73169 or

4. The National Archives and Records Administration (NARA). For information on the availability of this material at NARA, call (202) 741–6030, or go to: *http://www.archives.gov/federal_register/code_of_federal_regulations/ibr_locations.html.*

Availability—All SIAPs and Takeoff Minimums and ODPs are available online free of charge. Visit *http://www.nfdc.faa.gov* to register. Additionally, individual SIAP and Takeoff Minimums and ODP copies may be obtained from:

1. FAA Public Inquiry Center (APA–200), FAA Headquarters Building, 800 Independence Avenue SW., Washington, DC 20591; or

2. The FAA Regional Office of the region in which the affected airport is located.

FOR FURTHER INFORMATION CONTACT: Richard A. Dunham III, Flight Procedure Standards Branch (AFS–420), Flight Technologies and Programs Divisions, Flight Standards Service, Federal Aviation Administration, Mike Monroney Aeronautical Center, 6500 South MacArthur Blvd., Oklahoma City, OK 73169 (*Mail Address:* P.O. Box 25082, Oklahoma City, OK 73125) *Telephone:* (405) 954–4164.

SUPPLEMENTARY INFORMATION: This rule amends Title 14 of the Code of Federal Regulations, Part 97 (14 CFR part 97), by establishing, amending, suspending, or revoking SIAPS, Takeoff Minimums and/or ODPS. The complete regulators description of each SIAP and its associated Takeoff Minimums or ODP for an identified airport is listed on FAA form documents which are incorporated by reference in this amendment under 5 U.S.C. 552(a), 1 CFR part 51, and 14 CFR 97.20. The applicable FAA Forms are FAA Forms 8260–3, 8260–4, 8260–5, 8260–15A, and 8260–15B when required by an entry on 8260–15A.

The large number of SIAPs, Takeoff Minimums and ODPs, in addition to their complex nature and the need for a special format make publication in the **Federal Register** expensive and impractical. Furthermore, airmen do not use the regulatory text of the SIAPs, Takeoff Minimums or ODPs, but instead refer to their depiction on charts printed by publishers of aeronautical materials. The advantages of incorporation by reference are realized and publication of the complete description of each SIAP, Takeoff Minimums and ODP listed on FAA forms is unnecessary. This amendment provides the affected CFR sections and specifies the types of SIAPs and the effective dates of the, associated Takeoff Minimums and ODPs. This amendment also identifies the airport

and its location, the procedure, and the amendment number.

The Rule

This amendment to 14 CFR part 97 is effective upon publication of each separate SIAP, Takeoff Minimums and ODP as contained in the transmittal. Some SIAP and Takeoff Minimums and textual ODP amendments may have been issued previously by the FAA in a Flight Data Center (FDC) Notice to Airmen (NOTAM) as an emergency action of immediate flight safety relating directly to published aeronautical charts. The circumstances which created the need for some SIAP and Takeoff Minimums and ODP amendments may require making them effective in less than 30 days. For the remaining SIAPS and Takeoff Minimums and ODPS, an effective date at least 30 days after publication is provided.

Further, the SIAPs and Takeoff Minimums and ODPS contained in this amendment are based on the criteria contained in the U.S. Standard for Terminal Instrument Procedures (TERPS). In developing these SIAPS and Takeoff Minimums and ODPs, the TERPS criteria were applied to the conditions existing or anticipated at the affected airports. Because of the close and immediate relationship between these SIAPs, Takeoff Minimums and ODPs, and safety in air commerce, I find that notice and public procedures before adopting these SIAPS, Takeoff Minimums and ODPs are impracticable and contrary to the public interest and, where applicable, that good cause exists for making some SIAPs effective in less than 30 days.

Conclusion

The FAA has determined that this regulation only involves an established body of technical regulations for which frequent and routine amendments are necessary to keep them operationally current. It, therefore—(1) Is not a ''significant regulatory action'' under Executive Order 12866; (2) is not a ''significant rule'' under DOT Regulatory Policies and Procedures (44 FR 11034; February 26,1979); and (3) does not warrant preparation of a regulatory evaluation as the anticipated impact is so minimal. For the same reason, the FAA certifies that this amendment will not have a significant economic impact on a substantial number of small entities under the criteria of the Regulatory Flexibility Act.

List of Subjects in 14 CFR Part 97

Air traffic control, Airports, Incorporation by reference, and Navigation (air).

Issued in Washington, DC, on October 28, 2011.

John McGraw,

Deputy Director, Flight Standards Service.

Adoption of the Amendment

Accordingly, pursuant to the authority delegated to me, Title 14, Code of Federal Regulations, Part 97 (14 CFR part 97) is amended by establishing, amending, suspending, or revoking Standard Instrument Approach Procedures and/or Takeoff Minimums and/or Obstacle Departure Procedures effective at 0902 UTC on the dates specified, as follows:

PART 97—STANDARD INSTRUMENT APPROACH PROCEDURES

■ 1. The authority citation for part 97 continues to read as follows:

Authority: 49 U.S.C. 106(g), 40103, 40106, 40113, 40114, 40120, 44502, 44514, 44701, 44719, 44721–44722.

■ 2. Part 97 is amended to read as follows:

Effective 15 DEC 2011

McGrath, AK, McGrath, RNAV (GPS) RWY 16, Amdt 1
McGehee, AR, McGehee Muni, RNAV (GPS) RWY 18, Orig
McGehee, AR, McGehee Muni, RNAV (GPS) RWY 36, Orig
McGehee, AR, McGehee Muni, VOR/DME–A, Amdt 3
Phoenix, AZ, Phoenix-Mesa Gateway, RNAV (GPS) RWY 12R, Amdt 1
Phoenix, AZ, Phoenix-Mesa Gateway, RNAV (GPS) RWY 30L, Amdt 1
Blythe, CA, Blythe, RNAV (GPS) RWY 26, Amdt 1
Cloverdale, CA, Cloverdale Muni, Takeoff Minimums and Obstacle DP, Amdt 1
Davis/Woodland/Winters, CA, Yolo County, RNAV (GPS) RWY 16, Amdt 2
Oxnard, CA, Oxnard, ILS OR LOC RWY 25, Amdt 13
Oxnard, CA, Oxnard, LOC RWY 25, Orig, CANCELLED
Oxnard, CA, Oxnard, RNAV (GPS) RWY 25, Amdt 1
Oxnard, CA, Oxnard, VOR RWY 25, Amdt 10
Stockton, CA, Stockton Metropolitan, ILS OR LOC RWY 29R, Amdt 20
Stockton, CA, Stockton Metropolitan, NDB RWY 29R, Amdt 14E, CANCELLED
Holyoke, CO, Holyoke, Takeoff Minimums & Obstacle DP, Amdt 1
Bonifay, FL, Tri-County, NDB–A, Amdt 2
Bonifay, FL, Tri-County, RNAV (GPS) RWY 19, Orig
Donalsonville, GA, Donalsonville Muni, RNAV (GPS) RWY 18, Amdt 1
Donalsonville, GA, Donalsonville Muni, RNAV (GPS) RWY 36, Amdt 1
Jasper, GA, Pickens County, RNAV (GPS) RWY 16, Amdt 1
Nahunta, GA, Brantley County, RNAV (GPS) Y RWY 1, Orig
Nahunta, GA, Brantley County, RNAV (GPS) Y RWY 19, Orig
Nahunta, GA, Brantley County, RNAV (GPS) Z RWY 1, Orig
Nahunta, GA, Brantley County, RNAV (GPS) Z RWY 19, Orig
Driggs, ID, Driggs-Reed Memorial, LAMON ONE Graphic DP
Driggs, ID, Driggs-Reed Memorial, LAMON TWO Graphic DP, CANCELLED
Driggs, ID, Driggs-Reed Memorial, RNAV (GPS) RWY 3, Amdt 1
Driggs, ID, Driggs-Reed Memorial, Takeoff Minimums & Obstacle DP, Amdt 3
Battle Creek, MI, W K Kellog, VOR OR TACAN RWY 5, Amdt 19A, CANCELLED
Hancock, MI, Houghton County Memorial, Takeoff Minimums and Obstacle DP, Amdt 3
Lansing, MI, Capital Region Intl, ILS OR LOC RWY 10R, Amdt 10
Three Rivers, MI, Three Rivers Muni Dr. Haines, Takeoff Minimums and Obstacle DP, Orig
Brainerd, MN, Brainerd Lakes Rgnl, ILS OR LOC/DME RWY 34, Amdt 1
Park Rapids, MN, Park Rapids Muni-Konshok Field, NDB RWY 31, Amdt 2
Park Rapids, MN, Park Rapids Muni-Konshok Field, RNAV (GPS) RWY 13, Orig
Park Rapids, MN, Park Rapids Muni-Konshok Field, RNAV (GPS) RWY 31, Orig
Park Rapids, MN, Park Rapids Muni-Konshok Field, VOR RWY 31, Amdt 14
Park Rapids, MN, Park Rapids Muni-Konshok Field, VOR/DME RWY 13, Amdt 9
Red Wing, MN, Red Wing Rgnl, ILS OR LOC RWY 9, Amdt 1
Red Wing, MN, Red Wing Rgnl, RNAV (GPS) RWY 9, Amdt 1
St Paul, MN, St Paul Downtown Holman Fld, Takeoff Minimums and Obstacle DP, Amdt 8
Branson West, MO, Branson West Muni-Emerson Field, Takeoff Minimums and Obstacle DP, Orig
Fort Leonard Wood, MO, Waynesville-St. Robert Rgnl Forney Fld, Takeoff Minimums and Obstacle DP, Orig
Manteo, NC, Dare County Rgnl, GPS RWY 5, Orig, CANCELLED
Manteo, NC, Dare County Rgnl, GPS RWY 17, Orig, CANCELLED
Manteo, NC, Dare County Rgnl, GPS RWY 23, Orig, CANCELLED
Manteo, NC, Dare County Rgnl, NDB RWY 17, Amdt 6
Manteo, NC, Dare County Rgnl, RNAV (GPS) RWY 5, Orig
Manteo, NC, Dare County Rgnl, RNAV (GPS) RWY 17, Orig
Manteo, NC, Dare County Rgnl, RNAV (GPS) RWY 23, Orig
Manteo, NC, Dare County Rgnl, Takeoff Minimums and Obstacle DP, Amdt 2
Morganton, NC, Foothills Rgnl, LOC RWY 3, Amdt 2
Kimball, NE., Kimball Muni/Robert E Arraj Field, RNAV (GPS) RWY 10, Amdt 1
Kimball, NE., Kimball Muni/Robert E Arraj Field, RNAV (GPS) RWY 28, Amdt 1
Carlsbad, NM, Cavern City Air Terminal, RNAV (GPS) RWY 32L, Amdt 1
Ely, NV, Ely Arpt/Yelland Fld, RNAV (GPS) RWY 18, Amdt 1

Minden, NV, Minden-Tahoe, MINDEN TWO Graphic DP
Minden, NV, Minden-Tahoe, Takeoff Minimums and Obstacle DP, Amdt 2
Cleveland, OH, Cleveland-Hopkins Intl, ILS OR LOC RWY 28, Amdt 24
Cleveland, OH, Cleveland-Hopkins Intl, RNAV (GPS) RWY 10, Amdt 3
Cleveland, OH, Cleveland-Hopkins Intl, RNAV (GPS) RWY 28, Amdt 2
North Bend, OR, Southwest Oregon Rgnl, ILS OR LOC RWY 4, Amdt 7A
North Bend, OR, Southwest Oregon Rgnl, VOR/DME RWY 4, Amdt 10
Wilkes-Barre/Scranton, PA, Wilkes-Barre/Scranton Intl, NDB–A, Amdt 17A, CANCELLED
Paris, TN, Henry County, ILS OR LOC/NDB RWY 2, Amdt 1, CANCELLED
Abilene, TX, Abilene Rgnl, VOR RWY 22, Amdt 4, CANCELLED
Gruver, TX, Gruver Muni, RNAV (GPS) RWY 2, Orig
Gruver, TX, Gruver Muni, RNAV (GPS) RWY 20, Orig
Gruver, TX, Gruver Muni, VOR/DME OR GPS–B, Orig, CANCELLED
Lamesa, TX, Lamesa Muni, Takeoff Minimums and Obstacle DP, Orig
Brigham City, UT, Brigham City, RNAV (GPS) RWY 35, Amdt 2
Provo, UT, Provo Muni, ILS OR LOC/DME RWY 13, Amdt 2
Provo, UT, Provo Muni, RNAV (GPS) RWY 13, Amdt 2
Gordonsville, VA, Gordonsville Muni, RNAV (GPS) RWY 5, Orig
Gordonsville, VA, Gordonsville Muni, RNAV (GPS) RWY 23, Orig
Gordonsville, VA, Gordonsville Muni, Takeoff Minimums and Obstacle DP, Orig

[FR Doc. 2011–28929 Filed 11–9–11; 8:45 am]

BILLING CODE 4910–13–P

DEPARTMENT OF TRANSPORTATION

Federal Aviation Administration

14 CFR Part 97

[Docket No. 30811; Amdt. No. 3451]

Standard Instrument Approach Procedures, and Takeoff Minimums and Obstacle Departure Procedures; Miscellaneous Amendments

AGENCY: Federal Aviation Administration (FAA), DOT.

ACTION: Final rule.

SUMMARY: This rule establishes, amends, suspends, or revokes Standard Instrument Approach Procedures (SIAPs) and associated Takeoff Minimums and Obstacle Departure Procedures for operations at certain airports. These regulatory actions are needed because of the adoption of new or revised criteria, or because of changes occurring in the National Airspace System, such as the commissioning of new navigational facilities, adding new obstacles, or changing air traffic requirements. These changes are designed to provide safe and efficient use of the navigable airspace and to promote safe flight operations under instrument flight rules at the affected airports.

DATES: This rule is effective November 10, 2011. The compliance date for each SIAP, associated Takeoff Minimums, and ODP is specified in the amendatory provisions.

The incorporation by reference of certain publications listed in the regulations is approved by the Director of the **Federal Register** as of November 10, 2011.

ADDRESSES: Availability of matter incorporated by reference in the amendment is as follows:

For examination—

1. FAA Rules Docket, FAA Headquarters Building, 800 Independence Avenue SW., Washington, DC 20591;

2. The FAA Regional Office of the region in which the affected airport is located;

3. The National Flight Procedures Office, 6500 South MacArthur Blvd., Oklahoma City, OK 73169 or

4. The National Archives and Records Administration (NARA). For information on the availability of this material at NARA, call (202) 741–6030, or go to: *http://www.archives.gov/federal_register/code_of_federal_regulations/ibr_locations.html.*

Availability—All SIAPs are available online free of charge. Visit nfdc.faa.gov to register. Additionally, individual SIAP and Takeoff Minimums and ODP copies may be obtained from:

1. FAA Public Inquiry Center (APA–200), FAA Headquarters Building, 800 Independence Avenue SW., Washington, DC 20591; or

2. The FAA Regional Office of the region in which the affected airport is located.

FOR FURTHER INFORMATION CONTACT: Richard A. Dunham III, Flight Procedure Standards Branch (AFS–420) Flight Technologies and Programs Division, Flight Standards Service, Federal Aviation Administration, Mike Monroney Aeronautical Center, 6500 South MacArthur Blvd., Oklahoma City, OK 73169 (*Mail Address:* P.O. Box 25082 Oklahoma City, OK. 73125) *telephone:* (405) 954–4164.

SUPPLEMENTARY INFORMATION: This rule amends Title 14, Code of Federal Regulations, Part 97 (14 CFR part 97) by amending the referenced SIAPs. The complete regulatory description of each SIAP is listed on the appropriate FAA Form 8260, as modified by the National Flight Data Center (FDC)/Permanent Notice to Airmen (P–NOTAM), and is incorporated by reference in the amendment under 5 U.S.C. 552(a), 1 CFR part 51, and § 97.20 of Title 14 of the Code of Federal Regulations.

The large number of SIAPs, their complex nature, and the need for a special format make their verbatim publication in the **Federal Register** expensive and impractical. Further, airmen do not use the regulatory text of the SIAPs, but refer to their graphic depiction on charts printed by publishers of aeronautical materials. Thus, the advantages of incorporation by reference are realized and publication of the complete description of each SIAP contained in FAA form documents is unnecessary. This amendment provides the affected CFR sections and specifies the types of SIAP and the corresponding effective dates. This amendment also identifies the airport and its location, the procedure and the amendment number.

The Rule

This amendment to 14 CFR part 97 is effective upon publication of each separate SIAP as amended in the transmittal. For safety and timeliness of change considerations, this amendment incorporates only specific changes contained for each SIAP as modified by FDC/P–NOTAMs.

The SIAPs, as modified by FDC P–NOTAM, and contained in this amendment are based on the criteria contained in the U.S. Standard for Terminal Instrument Procedures (TERPS). In developing these changes to SIAPs, the TERPS criteria were applied only to specific conditions existing at the affected airports. All SIAP amendments in this rule have been previously issued by the FAA in a FDC NOTAM as an emergency action of immediate flight safety relating directly to published aeronautical charts. The circumstances which created the need for all these SIAP amendments require making them effective in less than 30 days.

Because of the close and immediate relationship between these SIAPs and safety in air commerce, I find that notice and public procedure before adopting these SIAPs are impracticable and contrary to the public interest and, where applicable, that good cause exists for making these SIAPs effective in less than 30 days.

Conclusion

The FAA has determined that this regulation only involves an established

body of technical regulations for which frequent and routine amendments are necessary to keep them operationally current. It, therefore—(1) Is not a ''significant regulatory action'' under Executive Order 12866; (2) is not a ''significant rule'' under DOT regulatory Policies and Procedures (44 FR 11034; February 26, 1979); and (3) does not warrant preparation of a regulatory evaluation as the anticipated impact is so minimal. For the same reason, the FAA certifies that this amendment will not have a significant economic impact on a substantial number of small entities under the criteria of the Regulatory Flexibility Act.

List of Subjects in 14 CFR Part 97

Air traffic control, Airports, Incorporation by reference, and Navigation (air).

Issued in Washington, DC, on October 28, 2011.

John McGraw,

Deputy Director, Flight Standards Service.

Adoption of the Amendment

Accordingly, pursuant to the authority delegated to me, Title 14, Code of Federal regulations, part 97, 14 CFR part 97, is amended by amending Standard Instrument Approach Procedures, effective at 0901 UTC on the dates specified, as follows:

PART 97—STANDARD INSTRUMENT APPROACH PROCEDURES

■ 1. The authority citation for part 97 continues to read as follows:

Authority: 49 U.S.C. 106(g), 40103, 40106, 40113, 40114, 40120, 44502, 44514, 44701, 44719, 44721–44722.

§§ 97.23, 97.25, 97.27, 97.29, 97.31, 97.33, 97.35 [Amended]

■ 2. Part 97 is amended to read as follows:

By amending: § 97.23 VOR, VOR/DME, VOR or TACAN, and VOR/DME or TACAN; § 97.25 LOC, LOC/DME, LDA, LDA/DME, SDF, SDF/DME; § 97.27 NDB, NDB/DME; § 97.29 ILS, ILS/DME, MLS, MLS/DME, MLS/RNAV; § 97.31 RADAR SIAPs; § 97.33 RNAV SIAPs; and § 97.35 COPTER SIAPs, Identified as follows:

** * * Effective Upon Publication*

AIRAC date	State	City	Airport	FDC No.	FDC date	Subject
15–Dec–11 ...	UT	Brigham City	Brigham City	1/0187	10/4/11	Takeoff Minimums and Obstacle DP, Amdt 6
15–Dec–11 ...	CQ	Agana	Guam Intl	1/0544	10/4/11	RNAV (RNP) Z RWY 24R, Orig-B
15–Dec–11 ...	CQ	Agana	Guam Intl	1/0545	10/4/11	RNAV (RNP) Z RWY 6L, Orig-C
15–Dec–11 ...	CQ	Agana	Guam Intl	1/0546	10/4/11	RNAV (RNP) Z RWY 6R, Orig-B
15–Dec–11 ...	CQ	Agana	Guam Intl	1/0547	10/4/11	RNAV (RNP) Z RWY 24L, Orig-D
15–Dec–11 ...	CA	Oakland	Metropolitan Oakland Intl	1/0581	10/24/11	RNAV (RNP) Z RWY 27R, Orig
15–Dec–11 ...	CA	Oakland	Metropolitan Oakland Intl	1/0582	10/24/11	RNAV (RNP) Z RWY 29, Orig
15–Dec–11 ...	CA	Oakland	Metropolitan Oakland Intl	1/0583	10/24/11	RNAV (RNP) Z RWY 27L, Orig
15–Dec–11 ...	FL	Tallahassee	Tallahassee Rgnl	1/1455	9/26/11	ILS OR LOC/DME RWY 36, Amdt 24A
15–Dec–11 ...	FL	Tallahassee	Tallahassee Rgnl	1/1457	9/26/11	RNAV (GPS) RWY 9, Amdt 1
15–Dec–11 ...	FL	Tallahassee	Tallahassee Rgnl	1/1458	9/26/11	RNAV (GPS) RWY 36, Orig
15–Dec–11 ...	MI	Benton Harbor	Southwest Michigan Rgnl	1/2285	9/30/11	NDB RWY 28, Amdt 10
15–Dec–11 ...	MI	Benton Harbor	Southwest Michigan Rgnl	1/2286	9/30/11	VOR RWY 10, Amdt 10
15–Dec–11 ...	MI	Benton Harbor	Southwest Michigan Rgnl	1/2287	9/30/11	VOR RWY 28, Amdt 19
15–Dec–11 ...	CQ	Agana	Guam Intl	1/3566	9/30/11	VOR A, Orig-D
15–Dec–11 ...	CQ	Agana	Guam Intl	1/3567	9/30/11	VOR/DME OR TACAN RWY 6L, Orig-D
15–Dec–11 ...	WI	Sheboygan	Sheboygan County Memorial ..	1/5783	10/24/11	VOR RWY 21, Amdt 8A
15–Dec–11 ...	WI	Green Bay	Austin Straubel Intl	1/6812	10/24/11	RNAV (GPS) RWY 18, Amdt 1
15–Dec–11 ...	WI	Hayward	Sawyer County	1/8001	10/24/11	Takeoff Minimums and Obstacle DP, Amdt 4
15–Dec–11 ...	FL	Brooksville	Hernando County	1/8352	10/24/11	RNAV (GPS) RWY 3, Amdt 1
15–Dec–11 ...	FL	Brooksville	Hernando County	1/8353	10/24/11	RNAV (GPS) RWY 21, Amdt 1
15–Dec–11 ...	FL	Brooksville	Hernando County	1/8354	10/24/11	ILS OR LOC RWY 9, Amdt 2B
15–Dec–11 ...	FL	Brooksville	Hernando County	1/8355	10/24/11	RNAV (GPS) RWY 9, Amdt 1
15–Dec–11 ...	GA	Canon	Franklin County	1/8356	10/24/11	RNAV (GPS) RWY 8, Orig
15–Dec–11 ...	FL	Brooksville	Hernando County	1/8357	10/24/11	RNAV (GPS) RWY 27, Amdt 1
15–Dec–11 ...	GA	Canon	Franklin County	1/8358	10/24/11	RNAV (GPS) RWY 26, Orig
15–Dec– 11 ..	PA	Palmyra	Reigle Field	1/8359	10/24/11	Takeoff Minimums and Obstacle DP, Orig

[FR Doc. 2011–28932 Filed 11–9–11; 8:45 am]

BILLING CODE 4910–13–P

DEPARTMENT OF THE TREASURY

Internal Revenue Service

26 CFR Part 301

[TD 9554]

RIN 1545–BJ07

Extending Religious and Family Member FICA and FUTA Exceptions to Disregarded Entities; Correction

AGENCY: Internal Revenue Service (IRS), Treasury.

ACTION: Correction to final and temporary regulations.

SUMMARY: This document describes a correction to final and temporary regulations (TD 9554) extending the exceptions from taxes under the Federal Insurance Contributions Act (''FICA'') and the Federal Unemployment Tax Act (''FUTA'') under sections 3121(b)(3) (concerning individuals who work for certain family members), 3127 (concerning members of religious faiths), and 3306(c)(5) (concerning persons employed by children and spouses and children under 21 employed by their parents) of the Internal Revenue Code (''Code'') to entities that are disregarded as separate from their owners for Federal tax purposes. The temporary regulations also clarify the existing rule that the owners of disregarded entities, except for qualified subchapter S subsidiaries, are responsible for backup withholding and related information reporting requirements under section 3406. These regulations were published in the **Federal Register** on Tuesday, November 1, 2011 (76 FR 67363).

DATES: This correction is effective on November 10, 2011, and is applicable on November 1, 2011.

FOR FURTHER INFORMATION CONTACT: Joseph Perera, (202) 622–6040 (not a toll-free number).

SUPPLEMENTARY INFORMATION:

Background

The correction notice that is the subject of this document is under section 7701 of the Internal Revenue Code.

Need for Correction

As published, final and temporary regulations (TD 9554) contain an error that may prove to be misleading and is in need of clarification.

Correction of Publication

Accordingly, the publication of final and temporary regulations (TD 9554), which was the subject of FR Doc. 2011–28176, is corrected as follows:

On page 67366, column 1, under an amendatory instruction, the language ''**Par. 9.** Section 301.7701–2T is revised to read as follows:'' is removed and is replaced with the new language ''**Par. 9.** Section 301.7701–2T is added to read as follows:'' in its place.

LaNita Van Dyke,

Chief, Publications and Regulations Branch, Legal Processing Division, Associate Chief Counsel, Procedure and Administration.

[FR Doc. 2011–29087 Filed 11–9–11; 8:45 am]

BILLING CODE 4830–01–P

ENVIRONMENTAL PROTECTION AGENCY

40 CFR Part 300

[EPA–HQ–SFUND–1983–0002; FRL–9488–7]

National Oil and Hazardous Substance Pollution Contingency Plan; National Priorities List: Partial Deletion of the Tar Lake Superfund Site

AGENCY: Environmental Protection Agency (EPA).

ACTION: Direct final rule.

SUMMARY: The U.S. Environmental Protection Agency (EPA) Region 5 is publishing a direct final Notice of Partial Deletion of the following two parcels of the Tar Lake Superfund Site (Site) located in Mancelona, Michigan from the National Priorities List (NPL): The non-East Tailings Area (ETA) part of property PIN 05–11–129–006–00 (41.4 acres); and the non-ETA part of property PIN 05–11–129–007–00 (33.63 acres). Refer to Figures 1 to 3 in the deletion docket to view the location of the two parcels being proposed for deletion. The NPL, promulgated pursuant to section 105 of the Comprehensive Environmental Response, Compensation and Liability Act (CERCLA) of 1980, as amended, is an appendix to the National Oil and Hazardous Substances Pollution Contingency Plan (NCP). This direct final partial deletion is being published by EPA with the concurrence of the State of Michigan, through the Michigan Department of Environmental Quality (MDEQ), because EPA has determined that all appropriate response actions at these two parcels under CERCLA, other than operation, maintenance and five-year reviews, have been completed. However, this partial deletion does not preclude future actions under Superfund.

This partial deletion pertains only to the two property PINs listed above. The deletion of these two parcels from the Site affects all surface soils, subsurface soils, structures and groundwater within the boundaries of these parcels. In 2005, the ETA, approximately 45.49 acres in the northeastern part of the Site, was deleted from the NPL when EPA determined that the ETA was acceptable for unrestricted use and unlimited exposure (UU/UE). The two parcels being proposed for deletion are adjacent to and south of the ETA. The remaining areas of the Site will remain on the NPL and are not being considered for deletion as part of this action.

DATES: This direct final partial deletion is effective January 9, 2012 unless EPA receives adverse comments by December 12, 2011. If adverse comments are received, EPA will publish a timely withdrawal of the direct final partial deletion in the **Federal Register** informing the public that the partial deletion will not take effect.

ADDRESSES: Submit your comments, identified by Docket ID No. EPA–HQ–SFUND–1983–0002, by one of the following methods:

- *Email:* Karen Cibulskis, Remedial Project Manager, at *cibulskis.karen@epa.gov* or Megan McSeveney, Community Involvement Coordinator, at *mcseveney.megan@epa.gov.*
- *Fax:* Gladys Beard, Deletion Process Manager, at (312) 697–2077.
- *Mail:* Karen Cibulskis, Remedial Project Manager, U.S. Environmental Protection Agency, Region 5 (SR–6J), 77 West Jackson Boulevard, Chicago, IL 60604, (312) 886–1843; or Megan McSeveney, Community Involvement Coordinator, U.S. Environmental Protection Agency (SI–7J), 77 West Jackson Boulevard, Chicago, IL 60604, (312) 886–1972 or (800) 621–8431.
- *Hand delivery:* Megan McSeveney, Community Involvement Coordinator, U.S. Environmental Protection Agency, (SI–7J), 77 West Jackson Boulevard, Chicago, IL 60604. Such deliveries are only accepted during the docket's normal hours of operation and special arrangements should be made for deliveries of boxed information. The normal business hours are Monday through Friday, 8:30 a.m. to 4:30 p.m., excluding Federal holidays.

Instruction: Direct your comments to Docket ID No. EPA–HQ–SFUND–1983–0002. EPA's policy is that all comments received will be included in the public docket without change and may be made available online at *http://www.regulations.gov,* including any personal information provided, unless the comment includes information claimed to be Confidential Business Information (CBI) or other information

whose disclosure is restricted by statute. Do not submit information that you consider to be CBI or otherwise protected through *http://www.regulations.gov* or email. The *http://www.regulations.gov* Web site is an ''anonymous access'' system, which means EPA will not know your identity or contact information unless you provide it in the body of your comment. If you send an email comment directly to EPA without going through *http://www.regulations.gov,* your email address will be automatically captured and included as part of the comment that is placed in the public docket and made available on the Internet. If you submit an electronic comment, EPA recommends that you include your name and other contact information in the body of your comment with any disk or CD–ROM you submit. If EPA cannot read your comment due to technical difficulties and cannot contact you for clarification, EPA may not be able to consider your comment. Electronic files should avoid the use of special characters, any form of encryption, and be free of any defects or viruses.

Docket

All documents in the docket are listed in the *http://www.regulations.gov* index. Although listed in the index, some information is not publicly available, *e.g.,* CBI or other information whose disclosure is restricted by statute. Certain other material, such as copyrighted material, will be publicly available only in the hard copy. Publicly available docket materials are available either electronically at *http://www.regulations.gov* or in hard copy at:

- U.S. Environmental Protection Agency-Region 5, 77 West Jackson Boulevard, Chicago, IL 60604, *Hours:* Monday through Friday, 8:30 a.m. to 4:30 p.m., excluding Federal holidays.
- Mancelona Public Library, 202 West State Street, Mancelona, MI 49659, *Phone:* (231) 587–9451, *Hours:* Monday through Thursday, 9 a.m. to 8 p.m.; Friday 12 p.m. to 6 p.m. and Saturday 9 a.m. to 5 p.m.

FOR FURTHER INFORMATION CONTACT:

Karen Cibulskis, Remedial Project Manager, U.S. Environmental Protection Agency, (SR–6J), 77 West Jackson Boulevard, Chicago, IL 60604, (312) 886–1843, *cibulskis.karen@epa.gov.*

SUPPLEMENTARY INFORMATION:

Table of Contents

I. Introduction
II. NPL Deletion Criteria
III. Deletion Procedures
IV. Basis for Site Deletion
V. Deletion Action

I. Introduction

EPA Region 5 is publishing this direct final Notice of Partial Deletion to delete two parcels of the Tar Lake Superfund Site from the NPL. This partial deletion pertains to all surface soils, subsurface soils, structures and groundwater within the boundaries of the non-ETA part of PIN 05–11–129–006–00 (41.4 acres) and the non-ETA part of PIN 05–11–129–007–00 (33.63 acres). The NPL constitutes Appendix B of 40 CFR part 300, which is the National Oil and Hazardous Substances Pollution Contingency Plan (NCP), which EPA promulgated pursuant to section 105 of the Comprehensive Environmental Response, Compensation and Liability Act (CERCLA) of 1980, as amended. EPA maintains the NPL as the list of sites that appear to present a significant risk to public health, welfare, or the environment. Sites on the NPL may be the subject of remedial actions financed by the Hazardous Substance Superfund (Fund). This partial deletion of the Tar Lake Superfund Site is proposed in accordance with 40 CFR 300.425(e) and is consistent with the Notice of Policy Change: Partial Deletion of Sites Listed on the National Priorities List, 60 FR 55466 (Nov. 1, 1995). As described in section 300.425(e)(3) of the NCP, a portion of a site deleted from the NPL remains eligible for Fund-financed remedial action if future conditions warrant such actions.

Because EPA considers this action to be noncontroversial and routine, this action will be effective January 9, 2012 unless EPA receives adverse comments by December 12, 2011. Along with this direct final Notice of Partial Deletion, EPA is co-publishing a Notice of Intent to Delete in the ''Proposed Rules'' section of the **Federal Register**. If adverse comments are received within the 30-day public comment period on this deletion action, EPA will publish a timely withdrawal of this direct final Notice of Partial Deletion before the effective date of the partial deletion and the partial deletion will not take effect. EPA will, as appropriate, prepare a response to comments and continue with the deletion process on the basis of the Notice of Intent for Partial Deletion and the comments already received. There will be no additional opportunity to comment.

Section II of this document explains the criteria for deleting sites from the NPL. Section III discusses procedures that EPA is using for this action. Section IV discusses the two parcels of the Tar Lake Superfund Site and demonstrates how they meet the deletion criteria. Section V discusses EPA's action to partially delete these two parcels of the Site from the NPL unless adverse comments are received during the public comment period.

II. NPL Partial Deletion Criteria

The NCP establishes the criteria that EPA uses to delete sites from the NPL. In accordance with 40 CFR 300.425(e), sites may be deleted from the NPL where no further response is appropriate. In making such a determination pursuant to 40 CFR 300.425(e), EPA will consider, in consultation with the state, whether any of the following criteria have been met:

i. Responsible parties or other persons have implemented all appropriate response actions required;

ii. All appropriate Fund-financed response under CERCLA has been implemented and no further response action by responsible parties is appropriate; or

iii. The remedial investigation has shown that the release poses no significant threat to public health or the environment and, therefore, the taking of remedial measures is not appropriate.

Pursuant to CERCLA section 121(c) and the NCP, EPA conducts five-year reviews to ensure the continued protectiveness of remedial actions where hazardous substances, pollutants or contaminants remain at a site above levels that allow for UU/UE. EPA conducts such five-year reviews even if a site is deleted from the NPL. EPA may initiate further action to ensure continued protectiveness at a deleted site if new information becomes available that indicates it is appropriate. Whenever there is a significant release from a site deleted from the NPL, the deleted site may be restored to the NPL without application of the hazard ranking system.

III. Partial Deletion Procedures

The following procedures apply to this partial deletion of the Tar Lake Superfund Site:

(1) EPA consulted with the State of Michigan on this partial deletion prior to developing this direct final Notice of Partial Deletion and the Notice of Intent to Delete co-published today in the ''Proposed Rules'' section of the **Federal Register**.

(2) EPA provided the State with 30 working days for review of this notice and the parallel Notice of Intent for Partial Deletion prior to their publication today; and the State, through MDEQ, concurred on the partial deletion of the Site from the NPL.

(3) Concurrently with the publication of this direct final Notice of Partial Deletion, a notice of the availability of

the parallel Notice of Intent for Partial Deletion is being published in a major local newspaper, The Antrim Review, in Bellarie, Michigan. The newspaper notice announces the 30-day public comment period concerning the Notice of Intent for Partial Deletion of the Site from the NPL.

(4) EPA placed copies of documents supporting the proposed partial deletion in the deletion docket and made these items available for public inspection and copying at the Site information repositories identified above.

(5) If adverse comments are received within the 30-day public comment period on this partial deletion action, EPA will publish a timely notice of withdrawal of this direct final Notice for Partial Deletion before its effective date and will prepare a response to comments and continue with the deletion process on the basis of the Notice of Intent for Partial Deletion and the comments already received. Deletion of a portion of a site from the NPL does not in itself create, alter, or revoke any individual's rights or obligations. Deletion of a portion of a site from the NPL does not in any way alter EPA's right to take enforcement actions, as appropriate. The NPL is designed primarily for informational purposes and to assist EPA management. Section 300.425(e)(3) of the NCP states that the partial deletion of a site from the NPL does not preclude eligibility for future response actions should future conditions warrant such actions.

IV. Basis for Site Deletions

The following information provides EPA's rationale for deleting the non-ETA part of PIN 05–11–129–006–00 (41.4 acres) and the non-ETA part of PIN 05–11–129–007–00 (33.63 acres) of the Site from the NPL.

Site Background and History

The Site (EPA ID: MID980794655) originally consisted of approximately 234 acres of land located just east of Highway 131, north and south of Elder Road, and south of the Village of Mancelona in the north central part of the lower peninsula of Michigan. The John Otis Charcoal Iron Furnace Company manufactured iron at the Site from 1882 to 1886, and the Antrim Iron Works Company took over the Site in 1886 and continued to manufacture iron there until 1945. From approximately 1910 to 1944, a tar-like residue from Antrim Iron Works' charcoal production process was discharged into an on-site depression south of Elder Road (also known as ''Tar Lake'') that covered four acres of land. The Site was proposed to be placed on the NPL on December 30, 1982 (47 FR 58476); and was placed on the NPL on September 8, 1983 (48 FR 40658).

The Site was separated into two operable units (OUs): The first operable unit (OU1) included the tar contamination in the 4-acre depression in the northwest corner of the Site and the second operable unit (OU2), comprised the remaining contamination beneath the 4-acre Tar Lake depression and any additional contaminated groundwater and soil within the Site. On November 25, 2005 EPA partially deleted the ETA component of OU2. At this time, all surface soils, subsurface soils, structures and groundwater within the boundaries of the non-ETA part of PIN 05–11–129–006–00 (41.4 acres) and the non-ETA part of PIN 05–11–129–007–00 (33.63 acres) proposed for deletion are part of OU2. All of OU1 and the remaining sections of OU2 will remain on the NPL (please refer to Figures 1 to 3). This partial deletion notice will focus on the activities conducted at the two parcels in OU2 subject to this notice.

Ownership of the Site changed several times during the succeeding years after 1945, and in 2009 Mancelona Private Power Producers (MP3) of Traverse City, Michigan, purchased the two parcels that are the subject of this partial deletion and are the current owners of this property. MP3 is an energy company planning to build and operate a $140,000,000 biomass energy plant on these two parcels and the already-deleted ETA section of the Site.

Remedial Investigation and Feasibility Study (RI/FS)

In June 1999, EPA commenced the Remedial Investigation (RI) field work for OU2. The overall objective of the RI for OU2 was to characterize what effects, if any, the former iron manufacturing processes had on the Site, including determining the lateral and vertical extent of any contamination; understanding the potential risk to human health and the environment; and developing sufficient data to perform a feasibility study (FS). As part of the RI/FS for OU2, EPA conducted a baseline risk assessment to determine the current and future effects of contaminants on human health and the environment. Initially, the Site was anticipated to have only industrial reuse potential. The RI for OU2 originally quantified only industrial reuse risks, but was expanded to apply address industrial, commercial, recreational, and residential uses.

During the RI, EPA determined that an on-site plume of groundwater in the shallow unconfined aquifer beneath the 4-acre Tar Lake depression was contaminated with benzene and 2,4-dimethylphenol above maximum contaminant levels (MCLs) and state drinking water standards. EPA also concluded that on-site groundwater collected from groundwater monitoring wells and off-site groundwater collected from residential wells in the shallow drinking water aquifer were contaminated with iron and manganese at concentrations above the State of Michigan's Secondary Drinking Water Standards, but not at concentrations above EPA's health-based risk levels. Therefore, the 2002 Record of Decision (ROD) determined that iron and manganese were not chemicals of concern for the CERCLA remedy. Groundwater samples collected up gradient and between the 4-acre depression and the two parcels proposed for deletion did not contain benzene, 2,4-dimethylphenol or iron above MCLs or risk-based levels during the RI. The RI and FS were completed on August 7, 2000.

Selected Remedy

A ROD for OU2 was signed on February 25, 2002 to address the soil and groundwater. The OU2 ROD listed the following site-wide remedial action objectives:

a. Prevent human exposure through contact, ingestion, or inhalation of contaminated tarry-like waste residue (surface tar) in the Creosote Area.

b. Prevent potential ecological impacts from exposure to surface tar.

c. Control potential erosion and off-site transport of tar to nearby Nelson Lake.

d. Prevent leaching of contaminants from the 4-acre depression or ''rind'' into soil and from soil into groundwater.

e. Remediate on-site contaminated groundwater in the shallow unconfined aquifer to concentrations below MCLs or risk-based Michigan PA 451 Part 201 Generic Cleanup Criteria for Groundwater within a reasonable time frame. Groundwater down gradient of the site is used for drinking water purposes and therefore a rapid restoration of on-site groundwater should be considered.

f. Minimize potential for future releases of contaminated on-site groundwater to off-site groundwater.

The parcels identified for deletion are up gradient of both the sources of contamination and the contaminated groundwater plume being addressed in the ROD for OU2. The elements of the selected remedy pertaining to the two parcels are:

a. Institutional controls (ICs), including recording legal notices on property deeds to restrict on-site land and groundwater use; and

b. Long-term monitoring to assess groundwater conditions over time.

The ICs would indicate that only industrial, commercial and recreational land use would be allowed until risks associated with residential use had been assessed. In addition, EPA would ensure that the current property owners place language in their property deed to explain that no groundwater wells should be installed until on-site groundwater in the shallow drinking water aquifer is below the MCL for benzene (5 parts per billion (ppb)) and below the state drinking water standard for 2,4-dimethylphenol (370 ppb). When groundwater monitoring indicates that on-site groundwater is below MCLs and state drinking water standards during four consecutive sampling events, there would no longer be restrictions on groundwater.

Two Explanation of Significant Differences (ESDs) were written, in 2002 and 2004, for the Site; however neither one impacted the areas currently proposed for deletion. In 2009, property owners redeveloping a portion of the Site requested clarification of the groundwater institutional controls. The 2002 ROD did not clarify whether groundwater use was prohibited on the entire site until the groundwater contamination is cleaned up, even if groundwater sampling at a specific property indicates chemical concentrations are below MCLs and MDEQ criteria at that property. Also, the requirements for groundwater use referenced in the 2002 ROD are drinking water standards. On September 14, 2009 EPA issued an ESD clarifying that groundwater at the Site may be used for either drinking water or non-potable purposes before the biosparge groundwater treatment cleanup is complete, provided the use of the groundwater does not negatively impact EPA's selected remedy for the site, including, but not limited to, the biosparge system and groundwater monitoring wells, or pose an unacceptable risk to human health. The restrictive covenants or other institutional controls to be implemented at the Site will state that groundwater at the Site may be used for drinking water or non-potable purposes provided the property owner submits a proposal to EPA and MDEQ, showing the proposed depth, location and pumping rate of each proposed non-potable well, including an evaluation demonstrating that the expected use of the proposed well(s) should not negatively impact EPA's remedy. The proposal must also certify that non-potable wells will not be used for potable use and for drinking water wells, and the property owner must submit four consecutive sampling events at a monitoring well installed at each proposed well location, indicating that groundwater contaminants do not exceed applicable MCLs, MDEQ drinking water criteria, and other applicable or relevant and appropriate criteria.

Response Actions

Institutional controls are necessary for the non-ETA part of PIN 05–11–129–006–00 (41.4 acres) and the non-ETA part of PIN 05–11–129–007–00 (33.63 acres) to restrict residential land use because the ROD, and subsequent investigations, assumed future commercial, industrial or recreational land use. In addition, ICs are necessary for groundwater to prevent drinking water wells or non-potable use wells from being installed and to protect the integrity of the ongoing biosparge remedy, unless property owners provide assurances that groundwater use does not impact the ongoing groundwater remedy or provide an unacceptable risk. On April 16, 2010 and June 10, 2010 MP3 recorded two Declarations of Restrictive Covenants for the non-ETA part of PIN 05–11–129–006–00 (41.4 acres), and the non-ETA part of PIN 05–11–129–007–00 (33.63 acres), respectively. These Declarations are consistent with the land and groundwater use restrictions required in EPA's 2002 ROD and 2009 ESD. These restrictive covenants were approved by both EPA and the state before being recorded. These two parcels are facilities as that term is defined in part 201 (Environmental Remediation) of the State of Michigan's Natural Resources and Environmental Protection Act, 1994 PA 451, as amended (NREPA). MDEQ makes no warranty as to the fitness of these two parcels for any general or specific use, and prospective purchasers or users are advised to conduct due diligence prior to acquiring or using any portion of these two parcels and to undertake appropriate actions to comply with the requirements of section 20107a of the NREPA.

As noted in the RI, groundwater sampling conducted up gradient and between the 4-acre depression and the two parcels proposed for deletion did not contain benzene, 2,4-dimethylphenol or iron above MCLs or EPA risk-based levels. Sampling during the RI at MW–16, located within the parcels proposed for deletion, also resulted in non-detects for Volatile Organic Compounds (VOCs) and Semi-Volatile Organic Compounds (SVOCs) prior to the well going dry. MDEQ has been conducting annual and semi-annual groundwater monitoring since 2004 at a groundwater monitoring well cluster located between the area of groundwater contamination that is being remediated as part of OU2 and the two parcels that are being deleted. Benzene, 2,4-dimethylphenol, methylphenols or iron have not been detected in these wells above applicable criteria, including MDEQ's health-based drinking water standard for iron, which is currently 2,000 μg/L. This data, along with the data collected from MW–16 and subsequent groundwater data collected by the current property owner for their Baseline Environmental Assessment and Due Care Plan, provides assurance that the contaminated groundwater plume being remediated as part of OU2 has not impacted the groundwater beneath these two parcels.

Cleanup Goals

EPA determined and documented in a June 22, 2010 memo to the file that all remedy components pertaining to these two parcels have been implemented. There were no cleanup standards associated with remedial actions taken at these parcels. Groundwater monitoring results obtained during the RI and during the operation of the groundwater remedy demonstrate that MCLs and MDEQ Residency Drinking Water Criteria (RDWC) for benzene (5 μg/L), 2,4-dimethylphenol (370 μg/L), methylphenols (370 μg/L) or iron (2,000 μg/L) have not been exceeded in the groundwater underlying these parcels proposed for deletion.

Operation and Maintenance

The selected remedy in the 2002 ROD did not specify any ongoing operation and maintenance on the two parcels being proposed for deletion, other than ensuring compliance with the recorded ICs and conducting monitoring to ensure groundwater is not being impacted by the benzene contaminated groundwater beneath Tar Lake.

Five-Year Review

EPA conducted a five-year review of the Site in 2009 and determined that the remedy selected in the 2002 ROD was protective in the short-term. The five-year review did not recommend any modifications to the selected remedy for the two parcels being proposed for deletion. To achieve long-term protectiveness, the five-year review recommended implementation of proper restrictive covenants on all Site properties now in place for these two

parcels proposed for deletion, as well as additional data collection and evaluation activities in some areas of the Site to evaluate iron concentrations in groundwater. These evaluations being conducted are outside the boundaries of these two parcels and do not affect these two parcels. Five-year reviews will continue because waste was left in place in other areas of the Site above levels that allow for unrestricted use/unrestricted exposure (UU/UE). These two parcels proposed for deletion will be reviewed during the Site-wide FYR to ensure compliance with the institutional controls. The next five-year review will be conducted in 2014.

Community Involvement

Public participation activities have been satisfied as required by section 113(k) of CERCLA, 42 U.S.C. 9613(k), and CERCLA section 117, 42 U.S.C. 9617. Documents in the deletion docket which EPA relied on for determining that the parcels listed herein meet the criteria for deletion from the NPL are available to the public in the information repositories listed above in the Docket section and at *http://www.regulations.gov.*

Determination That the Criteria for Deletion Have Been Met

The NCP (40 CFR 300.425(e)) states that a site may be deleted from the NPL when no further response action is appropriate. EPA, in consultation with the State of Michigan, has determined that all appropriate response actions under CERCLA, other than five-year reviews, have been completed on the non-ETA part of PIN 05–11–129–006–00 (41.4 acres) and the non-ETA part of PIN 05–11–129–007–00 (33.63 acres). Therefore, these two parcels meet the criteria of 40 CFR 300.425(e) may be deleted from the NPL. The State of Michigan, through MDEQ, concurred on this proposed deletion by letter dated May 10, 2011.

Deletion Action

EPA, with concurrence of the State of Michigan through MDEQ, has determined that all appropriate response actions under CERCLA, other than operation, maintenance, monitoring and five-year reviews, have been completed. Therefore, EPA is deleting all surface soils, subsurface soils, structures and groundwater within the boundaries of the non-ETA part of PIN 05–11–129–006–00 (41.4 acres) and the non-ETA part of PIN 05–11–129–007–00 (33.63 acres) parcels of the Tar Lake Site from the NPL.

Because EPA considers this action to be noncontroversial and routine, EPA is taking it without prior publication. This action will be effective January 9, 2012 unless EPA receives adverse comments by December 12, 2011. If adverse comments are received within the 30-day public comment period, EPA will publish a timely withdrawal of this direct final Notice for Partial Deletion before the effective date of the deletion, and it will not take effect. EPA will prepare a response to comments and continue with the deletion process on the basis of the Notice of Intent for Partial Deletion and the comments already received. There will be no additional opportunity to comment.

List of Subjects in 40 CFR Part 300

Environmental protection, Air pollution control, Chemicals, Hazardous waste, Hazardous substances, Intergovernmental relations, Penalties, Reporting and recordkeeping requirements, Superfund, Water pollution control, Water supply.

Dated: October 24, 2011.

Susan Hedman,

Regional Administrator, Region 5.

For the reasons set out in this document, 40 CFR part 300 is amended as follows:

PART 300—[AMENDED]

■ 1. The authority citation for part 300 continues to read as follows:

Authority: 33 U.S.C. 1321(c)(2); 42 U.S.C. 9601–9657; E.O. 12777, 56 FR 54757, 3 CFR 1991 Comp., p. 351; E.O. 12580, 52 FR 2923, 3 CFR, 1987 Comp., p. 193.

Appendix B—[Amended]

■ 2. Table 1 of Appendix B to part 300 is amended by revising the entry under ''Tar Lake'', ''MI '' to read as follows:

Appendix B to Part 300—National Priorities List

TABLE 1—GENERAL SUPERFUND SECTION

State	Site name	City/County	Notes [a]
* * * *	* * *	* * *	* * *
MI	Tar Lake	Antrim	P
* * * *	* * *	* * *	* * *

[a] * * *
P = Sites with partial deletion(s).

[FR Doc. 2011–29069 Filed 11–9–11; 8:45 am]
BILLING CODE 6560–50–P

DEPARTMENT OF HOMELAND SECURITY

Coast Guard

46 CFR Parts 160, 180, and 199

[Docket No. USCG–2010–0048]

RIN 1625–AB46

Lifesaving Equipment: Production Testing and Harmonization With International Standards

Correction

In rule document 2011–25035, appearing on pages 62962–63015 in the issue of Monday, October 11, 2011, make the following corrections:

§ 160.051–1 [Corrected]

■ 1. On page 62975, in the second column, in § 160.051–1(b), in the fifth through seventh lines, ''[INSERT DATE 30 DAYS AFTER DATE OF PUBLICATION OF INTERIM RULE]'' should read ''November 10, 2011''.

§ 160.151–1 [Corrected]

■ 2. On page 62996, in the second column, in § 160.151–1, in the sixth through eighth lines, ''[INSERT DATE 30 DAYS AFTER DATE OF PUBLICATION OF INTERIM RULE]'' should read ''November 10, 2011''.

§ 180.150 [Corrected]

■ 3. On page 63015, in the third column, in § 180.150(c)(2), in the second through fourth lines, ''[INSERT DATE 30 DAYS AFTER DATE OF PUBLICATION OF INTERIM RULE]'' should read ''November 10, 2011''.

§ 199.150 [Corrected]

■ 4. On page 63015, in the third column, in § 199.150(a)(2)(ii), in the second through fourth lines, ''[INSERT DATE 30 DAYS AFTER DATE OF PUBLICATION OF INTERIM RULE]'' should read ''November 10, 2011''.

[FR Doc. C1–2011–25035 Filed 11–9–11; 8:45 am]

BILLING CODE 1505–01–D

DEPARTMENT OF COMMERCE

National Oceanic and Atmospheric Administration

50 CFR Part 300

RIN 0648–XA803

Fraser River Sockeye and Pink Salmon Fisheries; Inseason Orders

AGENCY: National Marine Fisheries Service (NMFS), National Oceanic and Atmospheric Administration (NOAA), Commerce.

ACTION: Temporary orders; inseason orders.

SUMMARY: NMFS publishes Fraser River salmon inseason orders to regulate treaty and non-treaty (all citizen) commercial salmon fisheries in U.S. waters. The orders were issued by the Fraser River Panel (Panel) of the Pacific Salmon Commission (Commission) and subsequently approved and issued by NMFS during the 2011 salmon fisheries within the U.S. Fraser River Panel Area. These orders established fishing dates, times, and areas for the gear types of U.S. treaty Indian and all citizen commercial fisheries during the period the Panel exercised jurisdiction over these fisheries.

DATES: The effective dates for the inseason orders are set out in this document under the heading Inseason Orders.

FOR FURTHER INFORMATION CONTACT: Peggy Mundy at (206) 526–4323.

SUPPLEMENTARY INFORMATION: The Treaty between the Government of the United States of America and the Government of Canada concerning Pacific Salmon was signed at Ottawa on January 28, 1985, and subsequently was given effect in the United States by the Pacific Salmon Treaty Act (Act) at 16 U.S.C. 3631–3644.

Under authority of the Act, Federal regulations at 50 CFR part 300, subpart F provide a framework for the implementation of certain regulations of the Commission and inseason orders of the Commission's Fraser River Panel for U.S. sockeye and pink salmon fisheries in the Fraser River Panel Area.

The regulations close the U.S. portion of the Fraser River Panel Area to U.S. sockeye and pink salmon Tribal and non-Tribal commercial fishing unless opened by Panel orders that are given effect by inseason regulations published by NMFS. During the fishing season, NMFS may issue regulations that establish fishing times and areas consistent with the Commission agreements and inseason orders of the Panel. Such orders must be consistent with domestic legal obligations and are issued by Regional Administrator, Northwest Region, NMFS. Official notification of these inseason actions is provided by two telephone hotline numbers described at 50 CFR 300.97(b)(1) and in 76 FR 25246 (May 4, 2011). The inseason orders are published in the **Federal Register** as soon as practicable after they are issued. Due to the frequency with which inseason orders are issued, publication of individual orders is impractical. Therefore, the 2011 orders are being published in this single document to avoid fragmentation.

Inseason Orders

The following inseason orders were adopted by the Panel and issued for U.S. fisheries by NMFS during the 2011 fishing season. Each of the following inseason actions was effective upon announcement on telephone hotline numbers as specified at 50 CFR 300.97(b)(1) and in 76 FR 25246 (May 4, 2011); those dates and times are listed herein. The times listed are local times, and the areas designated are Puget Sound Management and Catch Reporting Areas as defined in the Washington State Administrative Code at Chapter 220–22.

Order Number 2011–01: Issued 12:30 p.m., July 26, 2011

Treaty Indian Fisheries

Areas 4B, 5, and 6C: Open to drift gillnets from 6 p.m., Tuesday, July 26, 2011 to 12 p.m. (noon), Saturday, July 30, 2011.

Order Number 2011–02: Issued 11:30 a.m., July 29, 2011

Treaty Indian Fisheries

Areas 4B, 5, and 6C: Open to drift gillnets, extended from 12 p.m. (noon), Saturday, July 30, 2011 to 12 p.m. (noon), Wednesday, August 3, 2011.

Order Number 2011–03: Issued 12:30 p.m., August 2, 2011

Treaty Indian Fisheries

Areas 4B, 5, and 6C: Extend for drift gillnets from 12 p.m. (noon), Wednesday, August 3, 2011, to 12 p.m. (noon), Thursday, August 4, 2011.

Order Number 2011–04: Issued 11:45 a.m., August 3, 2011

Treaty Indian Fisheries

Areas 4B, 5, and 6C: Extend for drift gillnets from 12 p.m. (noon) Thursday, August 4, 2011 to 12 p.m. (noon) Saturday, August 6, 2011.

Areas 6, 7, and 7A: Open to net fishing from 5 a.m. Thursday, August 4, 2011 to 9 a.m. Friday, August 5, 2011.

All Citizen Fisheries

Areas 7 and 7A: Open to gillnets from 2 p.m. to 11:59 p.m. (midnight) Friday, August 5, 2011.

Areas 7 and 7A: Open to purse seines from 9 a.m. to 7 p.m. Friday, August 5, 2011.

Areas 7 and 7A: Open to reefnets from 5 a.m. to 3 p.m. Saturday, August 6, 2011.

Order Number 2011–05: Issued 1:30 p.m., August 5, 2011

Treaty Indian Fisheries

Areas 4B, 5, and 6C: Extend for drift gillnets from 12 p.m. (noon), Saturday, August 6, 2011, to 12 p.m. (noon), Tuesday, August 9, 2011.

Areas 6, 7, and 7A: Open to net fishing from 5 a.m. Saturday, August 6, 2011 to 11:59 p.m. Saturday, August 6, 2011.

Order Number 2011–06: Issued 3 p.m., August 8, 2011

Treaty Indian Fisheries

Areas 4B, 5, and 6C: Extend for drift gillnets from 12 p.m. (noon), Tuesday, August 9, 2011, through 12 p.m. (noon) Wednesday, August 10, 2011.

Order Number 2011–07: Issued 12:30 p.m., August 9, 2011

Treaty Indian Fisheries

Areas 4B, 5, and 6C: Extend for drift gillnets from 12 p.m. (noon) Wednesday, August 10, 2011 through 12 p.m. (noon) Saturday, August 13, 2011.

Areas 6, 7, and 7A: Open to net fishing from 5 a.m. to 11:59 p.m. (midnight) Wednesday, August 10, 2011.

All Citizen Fisheries

Areas 7 and 7A: Open to gillnets from 8 a.m. to 11:59 p.m. (midnight) Thursday, August 11, 2011.

Areas 7 and 7A: Open to purse seines from 9 a.m. to 5 p.m. Thursday, August 11, 2011.

Areas 7 and 7A: Open to reefnets from 5 a.m. to 9 p.m. Thursday, August 11, 2011.

Order Number 2011–08: Issued 1:40 p.m., August 12. 2011

Treaty Indian Fisheries

Areas 4B, 5, and 6C: Extend for drift gillnets from 12 p.m. (noon) Saturday, August 13, 2011 through 12 p.m. (noon) Tuesday, August 16, 2011.

All Citizen Fisheries

Areas 7 and 7A: Open to gillnets from 12 p.m. (noon) to 11:59 p.m. (midnight) Sunday, August 14, 2011.

Areas 7 and 7A: Open to purse seines from 10 a.m. to 4 p.m. Monday, August 15, 2011.

Areas 7 and 7A: Open to reefnets from 12 p.m. (noon) to 8 p.m. Saturday, August 13, 2011, and from 12 p.m. (noon) to 8 p.m. Sunday, August 14, 2011.

Order Number 2011–09: Issued 2:25 p.m., August 15, 2011

Treaty Indian Fisheries

Areas 4B, 5, and 6C: Extend for drift gillnets from 12 p.m. (noon) Tuesday, August 16, 2011, through 12 p.m. (noon) Wednesday, August 17, 2011.

Order Number 2011–10: Issued 1:15 p.m., August 19, 2011

Treaty Indian Fisheries

Areas 4B, 5, and 6C: Open for drift gillnets from 12 p.m. (noon) Saturday, August 20 through 12 p.m. (noon) Wednesday, August 24, 2011.

Areas 6, 7, and 7A: Open to net fishing from 5 a.m. Monday, August 22, 2011 through 9 a.m. Tuesday, August 23, 2011.

Order Number 2011–11: Issued 1:30 p.m., August 23, 2011

Treaty Indian Fisheries

Areas 4B, 5, and 6C: Extend for drift gillnets from 12 p.m. (noon) Wednesday, August 24, 2011 through 12 p.m. (noon) Saturday, August 27, 2011.

Areas 6, 7, and 7A: Open to net fishing from 5 a.m. Thursday, August 25, 2011 through 11:59 p.m. (midnight) Friday, August 26, 2011.

All Citizen Fisheries

Areas 7 and 7A: Open to gillnets from 8 a.m. to 11:59 p.m. (midnight) Wednesday, August 24, 2011.

Areas 7 and 7A: Open to purse seines from 5 a.m. to 9 p.m. Wednesday, August 24, 2011.

Areas 7 and 7A: Open to reefnets from 5 a.m. to 9 p.m. Wednesday, August 24, 2011, Thursday, August 25, 2011, and Friday August 26, 2011.

Order Number 2011–12: Issued 1:45 p.m., August 26, 2011

Treaty Indian Fisheries

Areas 4B, 5, and 6C: Extend for drift gillnets from 12 p.m. (noon) Saturday, August 27, 2011 through 12 p.m. (noon) Tuesday, August 30, 2011.

All Citizen Fisheries

Areas 7 and 7A: Open to reefnets with non-retention of sockeye from 5 a.m. to 9 p.m. Saturday, August 27, 2011, Sunday, August 28, 2011, and Monday August 29, 2011.

Order Number 2022–13: Issued 1 p.m., August 29, 2011

Treaty Indian Fisheries

Areas 4B, 5, and 6C: Extend for drift gillnets from 12 p.m. (noon) Tuesday, August 30, 2011 through 12 p.m. (noon) Friday, September 2, 2011.

Areas 6, 7, and 7A: Open to net fishing from 5 a.m. until 11:59 p.m. (midnight) Tuesday, August 30, 2011.

All Citizen Fisheries

Areas 7 and 7A: Open to gillnets with non-retention of sockeye from 8 a.m. to 11:59 p.m. (midnight) Wednesday, August 31, 2011.

Areas 7 and 7A: Open to purse seines with non-retention of sockeye from 5 a.m. to 9 p.m. Wednesday, August 31, 2011.

Areas 7 and 7A: Open to reefnets with non-retention of sockeye from 5 a.m. to 9 p.m. Tuesday, August 30, 2011, Wednesday, August 31, 2011 and Thursday, September 1, 2011.

Order Number 2011–14: Issued 1:30 p.m., September 1, 2011

Treaty Indian Fisheries

Areas 4B, 5, and 6C: Extend for drift gillnets from 12 p.m. (noon) Friday, September 2, 2011 through 12 p.m. (noon) Wednesday, September 7, 2011.

Areas 6, 7, and 7A: Open to net fishing from 5 a.m. Friday, September 2, 2011 until 11 a.m. Sunday, September 4, 2011, in the area southerly and easterly of a straight line drawn from Iwersen's dock on Point Roberts in the State of Washington to the Georgina Point Light at the entrance to Active Pass in the Province of British Columbia.

All Citizen Fisheries

Areas 7 and 7A: Open to gillnets with non-retention of sockeye from 11 a.m. to 11:59 p.m. (midnight) Sunday, September 4, 2011, in the area southerly and easterly of a straight line drawn from Iwersen's dock on Point Roberts in the State of Washington to the Georgina Point Light at the entrance to Active Pass in the Province of British Columbia.

Areas 7 and 7A: Open to purse seines with non-retention of sockeye from 11 a.m. to 9 p.m. Sunday, September 4, 2011, in the area southerly and easterly of a straight line drawn from Iwersen's dock on Point Roberts in the State of Washington to the Georgina Point Light at the entrance to Active Pass in the Province of British Columbia.

Areas 7 and 7A: Open to reefnets with non-retention of sockeye daily from 5 a.m. to 9 p.m. Friday, September 2, 2011 through Tuesday, September 6, 2011.

Order Number 2011–15: Issued 11:30 a.m., September 2, 2011

Treaty Indian Fisheries

Areas 6, 7, and 7A: Open to net fishing from 5 a.m. Monday, September 5, 2011 until 9 a.m. Tuesday, September 6, 2011, in the area southerly and

easterly of a straight line drawn from Iwersen's dock on Point Roberts in the State of Washington to the Georgina Point Light at the entrance to Active Pass in the Province of British Columbia.

All Citizen Fisheries

Areas 7 and 7A: Open to gillnets with non-retention of sockeye from 8:15 a.m. to 11:59 p.m. (midnight) Tuesday, September 6, 2011, in the area southerly and easterly of a straight line drawn from Iwersen's dock on Point Roberts in the State of Washington to the Georgina Point Light at the entrance to Active Pass in the Province of British Columbia.

Areas 7 and 7A: Open to purse seines with non-retention of sockeye from 5 a.m. to 9 p.m. Tuesday, September 6, 2011, in the area southerly and easterly of a straight line drawn from Iwersen's dock on Point Roberts in the State of Washington to the Georgina Point Light at the entrance to Active Pass in the Province of British Columbia.

Order Number 2011–16: Issued 12:30 p.m., September 6, 2011

Treaty Indian Fisheries

Areas 4B, 5, and 6C: Extend for drift gillnets from 12 p.m. (noon) Wednesday, September 7, 2011 through 9 a.m. Friday, September 9, 2011.

Areas 6, 7, and 7A: Open to net fishing from 5 a.m. Wednesday, September 7, 2011 until 9 a.m. Friday, September 9, 2011, in the area southerly and easterly of a straight line drawn from Iwersen's dock on Point Roberts in the State of Washington to the Georgina Point Light at the entrance to Active Pass in the Province of British Columbia.

All Citizen Fisheries

Areas 7 and 7A: Open to reefnets with non-retention of sockeye from 5 a.m. to 9 p.m. Wednesday, September 7, 2011 and Thursday, September 8, 2011.

Order Number 2011–17: Issued 1 p.m., September 12, 2011

Treaty Indian Fisheries

Areas 4B, 5, and 6C: Open for drift gillnets from 5 a.m. until 11:59 p.m. (midnight) Tuesday, September 13, 2011.

Areas 6, 7, and 7A: Open to net fishing from 5 a.m. until 11:59 p.m. (midnight) Tuesday, September 13, 2011, in the area southerly and easterly of a straight line drawn from Iwersen's dock on Point Roberts in the State of Washington to the Georgina Point Light at the entrance to Active Pass in the Province of British Columbia.

Order Number 2011–18: Issued 9 a.m., September 19, 2011

Areas 6 and 7: Relinquish regulatory control effective 11:59 p.m. (midnight), Saturday, September 24, 2011.

Area 7A: The area easterly of the Eastpoint Light line will be relinquished as scheduled at 11:59 p.m. (midnight) on Saturday, October 1, 2011. The remainder of Area 7A (westerly of the Eastpoint Light line) will be relinquished as scheduled at 11:59 p.m. (midnight) on Saturday, October 8, 2011.

Classification

The Assistant Administrator for Fisheries NOAA (AA), finds that good cause exists for the inseason orders to be issued without affording the public prior notice and opportunity for comment under 5 U.S.C. 553(b)(B) as such prior notice and opportunity for comments is impracticable and contrary to the public interest. Prior notice and opportunity for public comment is impracticable because NMFS has insufficient time to allow for prior notice and opportunity for public comment between the time the stock abundance information is available to determine how much fishing can be allowed and the time the fishery must open and close in order to harvest the appropriate amount of fish while they are available.

The AA also finds good cause to waive the 30-day delay in the effective date, required under 5 U.S.C. 553(d)(3), of the inseason orders. A delay in the effective date of the inseason orders would not allow fishers appropriately controlled access to the available fish at that time they are available.

This action is authorized by 50 CFR 300.97, and is exempt from review under Executive Order 12866.

Authority: 16 U.S.C. 3636(b).

Dated: November 4, 2011.

Steven Thur,

Acting Director, Office of Sustainable Fisheries, National Marine Fisheries Service.

[FR Doc. 2011–29192 Filed 11–9–11; 8:45 am]

BILLING CODE 3510–22–P

DEPARTMENT OF COMMERCE

National Oceanic and Atmospheric Administration

50 CFR Part 635

[Docket No. 110912579–1627–01]

RIN 0648–BB43

Atlantic Highly Migratory Species; Update to Information on the Effective Date of Atlantic Smoothhound Shark Fishery Management Measures

AGENCY: National Marine Fisheries Service (NMFS), National Oceanic and Atmospheric Administration (NOAA), Commerce.

ACTION: Final rule.

SUMMARY: NMFS is updating the anticipated effective date of smoothhound shark management measures implemented in the Final Rule for Amendment 3 to the 2006 Consolidated Highly Migratory Species (HMS) Fishery Management Plan (FMP) that published on June 1, 2010, and were corrected on August 17, 2010. These measures originally were to be effective around April 2012, before the beginning of the 2012 fishing year. However, the recently enacted Shark Conservation Act of 2010 requires NMFS to re-evaluate its shark management measures. The effective date will therefore be later than originally thought to fully consider the Shark Conservation Act implications and to allow time for the Section 7 consultation under the Endangered Species Act (ESA) to be completed. This rule also removes and reserves the smoothhound shark regulations. These sections will be returned, with amendments as needed, in a final rule that implements both the smoothhound shark sections of the Shark Conservation Act and any requirements of the Section 7 consultation regarding smoothhound sharks.

DATES: The rule is effective December 12, 2011. The amendments to § 635.21(e)(3)(i), § 635.24(a)(7), and § 635.71(d)(18), published at 76 FR 49379, August 10, 2011, are withdrawn, effective November 10, 2011.

FOR FURTHER INFORMATION CONTACT: Steve Durkee at (202) 670–6637 or Karyl Brewster-Geisz at (301) 427–8503; (fax) (301) 713–1917.

SUPPLEMENTARY INFORMATION: The Atlantic shark fisheries are managed under the 2006 Consolidated Atlantic Highly Migratory Species (HMS) Fishery Management Plan (FMP), its amendments, and its implementing

regulations found at 50 CFR part 635, issued under authority of the Magnuson-Stevens Fishery Conservation and Management Act (16 U.S.C. 1801 *et seq.*).

The regulatory identification number (RIN) for Amendment 3 to the 2006 Consolidated HMS FMP was prematurely closed. The RIN for this action is formally tied to the closed RIN for Amendment 3, 0648–AW65.

Amendment 3 (75 FR 30484, June 1, 2010; corrected by 75 FR 50715, August 17, 2010) will bring smoothhound sharks under Federal management. The smoothhound shark complex consists of smooth dogfish (*Mustelus canis*) and the Florida smoothhound (*Mustelus norrisi*). In Amendment 3, NMFS determined that smoothhound sharks are oceanic sharks that should be managed under the Secretary's authority because of their wide distribution and because their range extends into the jurisdictions of more than one of the five Atlantic fishery management councils. NMFS noted that, based on existing data, the smoothhound shark fishery was substantial, with average annual landings of 431 mt dw, which would rank among the highest for any species of shark managed by NMFS. Accordingly, NMFS determined that sound, science-based conservation and management was necessary to provide for the long-term sustainable yield of the stock.

Most smoothhound shark catch occurs with gillnet and trawl gear. In Amendment 3, NMFS stated that managing the species using uniform conservation and management measures developed and implemented through an FMP in accordance with the procedures set forth in the Magnuson-Stevens Act would better engage fishermen in developing conservation measures affecting the fishery. It would become increasingly difficult for NMFS to determine if prescriptive conservation and management measures, through future FMP amendments and/or regulatory changes, were needed without initial smoothhound management measures in place to collect critical data through Amendment 3.

The final rule implementing Amendment 3 published in June 2010, but the effective date for all smoothhound shark management measures was delayed to provide time for the NMFS Southeast Regional Office of Protected Resources to finalize a Biological Opinion (BiOp) on the proposed Amendment 3 measures for smoothhound effects on ESA-listed turtles and the northern right whale. Time was also needed for NMFS to perform outreach to a new set of constituents and to implement a new commercial smoothhound fishing permit (including Office of Management and Budget approval). In the final rule implementing Amendment 3, NMFS stated that a document would be published in the **Federal Register** announcing the effective date of those provisions once the Office of Management and Budget (OMB) approved information collection requirements, as required under the Paperwork Reduction Act (PRA). Furthermore, NMFS stated that the effective date would likely be before the start of the 2012 fishing season for smoothhounds (approximately April 1, 2012).

Since publication of the final rule implementing Amendment 3, the Shark Conservation Act of 2010 (Pub. L. 111–348) became law. This legislation directly impacts the smoothhound shark fishery. Specifically, it amended the Magnuson-Stevens Fishery Conservation and Management Act (Magnuson-Stevens Act) to provide greater protection for sharks landed in or imported into the United States. Among the provisions are two requirements that affect domestic shark management. One provision amends the Magnuson-Stevens Act to require that all sharks landed in the United States be maintained with the fins naturally-attached to the carcass through offloading. The second provision is labeled as a ''savings clause'' and reads: ''The amendments made by subsection (a) do not apply to an individual engaged in commercial fishing for smooth dogfish (*Mustelus canis*) in that area of the waters of the United States located shoreward of a line drawn in such a manner that each point on it is 50 nautical miles from the baseline of a State from which the territorial sea is measured, if the individual holds a valid State commercial fishing license, unless the total weight of smooth dogfish fins landed or found on board a vessel to which this subsection applies exceeds 12 percent of the total weight of smooth dogfish carcasses landed or found on board.''

Since NMFS needs to complete ESA consultation for the measures proposed for smoothhound sharks, and because the Agency needs to consider and implement congressionally-mandated smoothhound fishery management measures, NMFS is postponing the anticipated effective date of the Amendment 3 smoothhound management measures. The Agency no longer anticipates an effective date of April 1, 2012. Instead, NMFS anticipates the date will fall on the effective date of the measures in the forthcoming final rule to implement 2010 Shark Conservation Act smoothhound provisions, and only after ESA Section 7 consultation is completed. Notice of the effective date will be provided to the public and interested parties through publication in the **Federal Register** and through other outreach channels, including constituent phone calls and listserve notices. This rule also removes and reserves the smoothhound shark regulations in the Code of Federal Regulations. These sections will be returned, with amendments as needed, in a final rule that implements both the smoothhound shark sections of the Shark Conservation Act and any requirements of the Section 7 consultation regarding smoothhound sharks.

Classification

The NMFS AA has determined that this final action is necessary for the conservation and management of the HMS fishery, and that it is consistent with the Magnuson-Stevens Act, the 2006 Consolidated Atlantic HMS FMP and its amendments, ATCA, and other applicable law.

This final rule has been determined to be not significant for purposes of Executive Order 12866.

Pursuant to 5 U.S.C. 553(b)(B), there is good cause to waive prior notice and an opportunity for public comment on this action, as notice and comment is unnecessary. This action does not amend prior regulations, but merely provides updated information on the anticipated timing of future rulemaking to implement Amendment 3. Indeed, NMFS is not proposing any particular rulemaking action upon which the public could comment, but is instead delaying the anticipated effective date of a regulation to allow NMFS to assess the impact of the 2010 Shark Conservation Act on the original rulemaking. For the same reasons, there is good cause under 5 U.S.C. 553(d)(3) to waive the 30-day delay in effective date.

Because prior notice and opportunity for public comment are not required for this rule by 5 U.S.C. 553, or any other law, the analytical requirements of the Regulatory Flexibility Act, 5 U.S.C. 601 *et seq.,* are inapplicable.

List of Subjects in 50 CFR Part 635

Fisheries, Fishing, Fishing vessels, Permits, Quota, Smoothhound shark.

Dated: November 7, 2011.

Samuel D. Rauch III,

Deputy Assistant Administrator for Regulatory Programs, National Marine Fisheries Service.

For the reasons set out in the preamble, 50 CFR part 635 is amended as follows:

PART 635—ATLANTIC HIGHLY MIGRATORY SPECIES

■ 1. The authority citation for part 635 continues to read as follows:

Authority: 16 U.S.C. 971 *et seq.;* 16 U.S.C. 1801 *et seq.*

§ 635.2 [Amended]

■ 2. In § 635.2, the definition of ''smoothhound shark'' is removed.

§ 635.4 [Amended]

■ 3. In § 635.4, paragraph (e)(4) is removed and reserved.

§ 635.20 [Amended]

■ 4. In § 635.20, paragraph (e)(4) is removed and reserved.

§ 635.22 [Amended]

■ 5. In § 635.22, paragraph (c)(6) is removed and reserved.

§ 635.27 [Amended]

■ 6. In § 635.27, paragraphs (b)(1)(vii) and (b)(2)(iv) are removed and reserved.

Appendix A to Part 635 [Amended]

■ 7. In Table 1 of Appendix A to part 635, the heading and text for the entry E is removed and reserved.

[FR Doc. 2011–29180 Filed 11–9–11; 8:45 am]

BILLING CODE 3510–22–P

Proposed Rules

Federal Register
Vol. 76, No. 218
Thursday, November 10, 2011

This section of the FEDERAL REGISTER contains notices to the public of the proposed issuance of rules and regulations. The purpose of these notices is to give interested persons an opportunity to participate in the rule making prior to the adoption of the final rules.

NUCLEAR REGULATORY COMMISSION

10 CFR Part 51

[Docket Nos. PRM–51–14, et al.; NRC–2011–0189]

Taxpayers and Ratepayers United, et al.; Environmental Impacts of Severe Reactor and Spent Fuel Pool Accidents

AGENCY: Nuclear Regulatory Commission.

ACTION: Petitions for rulemaking; notice of receipt.

SUMMARY: The U.S. Nuclear Regulatory Commission (NRC or the Commission) has received 15 petitions for rulemaking (PRMs), each dated August 10, August 11, or August 12, 2011, from the multiple petitioners listed in Section I, Procedural Processing, of this document. The petitioners request that the NRC rescind its regulations that allow generic conclusions about the environmental impacts of severe reactor and spent fuel pool accidents and its regulations that preclude considerations of those issues in individual licensing proceedings. The petitioners also request the NRC to suspend multiple ongoing licensing proceedings while the NRC considers these petitions and the environmental issues raised in the Fukushima Task Force Report. The NRC is not instituting a public comment period for these PRMs at this time.

ADDRESSES: You can access publicly available documents related to the 15 petitions for rulemaking, using the following methods:

- *NRC's Public Document Room (PDR):* The public may examine and have copies made, for a fee, publicly available documents at the NRC's PDR, Room O1–F21, One White Flint North, 11555 Rockville Pike, Rockville, Maryland 20852.
- *NRC's Agencywide Documents Access and Management System (ADAMS):* Publicly available documents created or received at the NRC are available online in the NRC Library at *http://www.nrc.gov/reading-rm/adams.html.* From this page, the public can gain entry into ADAMS, which provides text and image files of the NRC's public documents. If you do not have access to ADAMS or if there are problems in accessing the documents located in ADAMS, contact the NRC's PDR reference staff at 1 (800) 397–4209, (301) 415–4737, or by email to *pdr.resource@nrc.gov*. For the ADAMS accession numbers for the documents related to the 15 PRMs, see Section I, Procedural Processing, of this document.
- *Federal Rulemaking Web Site:* Supporting materials related to the 15 petitions for rulemaking can be found at *http://www.regulations.gov* by searching on Docket ID NRC–2011–0189. Address questions about NRC dockets to Carol Gallagher; *telephone:* (301) 492–3668; *email: Carol.Gallagher@nrc.gov.*

FOR FURTHER INFORMATION CONTACT: Cindy Bladey, Chief, Rules, Announcements, and Directives Branch, Division of Administrative Services, Office of Administration, U.S. Nuclear Regulatory Commission, Washington, DC 20555–0001, *telephone:* (301) 492–3667, *email: Cindy.Bladey@nrc.gov.*

SUPPLEMENTARY INFORMATION:

I. Procedural Processing

The petitions for rulemaking were docketed by the NRC on September 20, 2011, and have been assigned the Docket Numbers identified in the following table. The following table also identifies the ADAMS accession numbers for each PRM. In addition, the following table provides the specific licensing proceedings that each petitioner requests the NRC to suspend.

Petitioner	Docket Nos.	ADAMS Accession No.	Licensing proceeding affected
Gene Stilp, on behalf of Taxpayers and Ratepayers United	PRM–51–14	ML112430559	Bell Bend.
Diane Curran, on behalf of San Luis Obispo Mothers for Peace	PRM–51–15	ML11236A322	Diablo Canyon.
Diane Curran, on behalf of Southern Alliance for Clean Energy	PRM–51–16	ML11223A291	Watts Bar.
Mindy Goldstein, on behalf of Center for a Sustainable Coast, Georgia Women's Action for New Directions f/k/a/ Atlanta Women's Action for New Directions, and Southern Alliance for Clean Energy.	PRM–51–17	ML11223A043	Vogtle.
Mindy Goldstein, on behalf of Southern Alliance for Clean Energy, National Parks Conservation Association, Dan Kipnis, and Mark Oncavage.	PRM–51–18	ML11223A044	Turkey Point.
Deborah Brancato, on behalf of Riverkeeper, Inc. & Hudson River Sloop Clearwater, Inc.	PRM–51–19	ML11229A712	Indian Point.
Paul Gunter, on behalf of Beyond Nuclear, Seacoast Anti-Pollution League and Sierra Club of New Hampshire.	PRM–51–20	ML11223A371	Seabrook.
Michael Mariotte, on behalf of Nuclear Information and Resource Service, Beyond Nuclear, Public Citizen, and SOMDCARES.	PRM–51–21	ML11223A344	Calvert Cliffs.
Raymond Shadis, on behalf of Friends of the Coast and New England Coalition.	PRM–51–22	ML11223A465 (PRM) ML11223A443 (Motion to Admit). ML11223A444 (Contention). ML11223A446 (Declaration).	Seabrook.
Robert V. Eye, on behalf of Intervenors in South Texas Project Nuclear Operating Co., Application for Units 3 and 4 Combined Operating License.	PRM–51–23	ML11223A472	South Texas.
Robert V. Eye, on behalf of Intervenors in Luminant Generation Company, LCC, Application for Comanche Peak Nuclear Power Plant Combined License.	PRM–51–24	ML11223A477	Comanche Peak.

Petitioner	Docket Nos.	ADAMS Accession No.	Licensing proceeding affected
Mary Olson, on behalf of the Ecology Party of Florida, Nuclear Information and Resource Service Southeast Office, and the Green Party of Florida.	PRM–51–25	ML11224A074	Levy.
Terry Lodge, on behalf of Beyond Nuclear, Citizens Environment Alliance of Southwestern Ontario, Don't Waste Michigan, and the Green Party of Ohio.	PRM–51–26	ML112450527	Davis-Besse.
Terry Lodge, on behalf of Beyond Nuclear, Citizens for Alternatives to Chemical Contamination, Citizens Environmental Alliance of Southwestern Ontario, Don't Waste Michigan, Sierra Club, Keith Gunter, Edward McArdle, Henry Newman, Derek Coronado, Sandra Bihn, Harold L. Stokes, Michael J. Keegan, Richard Coronado, George Steinman, Marilyn R. Timmer, Leonard Mandeville, Frank Mantei, Marcee Meyers, and Shirley Steinman.	PRM–51–27	ML112450528	Fermi.
Barry White, on behalf of Citizens Allied for Safe Energy, Inc	PRM–51–28	ML11224A232	Turkey Point.

Each submission separately cites the ''Recommendations for Enhancing Reactor Safety in the 21st Century: The Near-Term Task Force Review of Insights from the Fukushima Dai-ichi Accident'' (Fukushima Task Force Report, ADAMS Accession No. ML111861807), dated July 12, 2011, as rationale for the petitions for rulemaking. The Commission has recently directed staff to engage promptly with stakeholders to review and assess the recommendations of the Fukushima Task Force Report for the purpose of providing the Commission with fully-informed options and recommendations. *See* U.S. Nuclear Regulatory Commission, ''Near-Term Report and Recommendations for Agency Actions Following the Events in Japan,'' Staff Requirements Memorandum SECY–11–0093, August 19, 2011 (ADAMS Accession No. ML112310021) and U.S. Nuclear Regulatory Commission, ''Engagement of Stakeholders Regarding the Events in Japan,'' Staff Requirements Memorandum COMWDM–11–0001/COMWCO–11–0001, August 22, 2011 (ADAMS Accession No. ML112340693). The NRC will consider the issues raised by these PRMs through the process the Commission has established for addressing the recommendations from the Fukushima Task Force Report, and is not providing a separate opportunity for public comment on the PRMs at this time.

On September 9, 2011, the Commission issued a Memorandum and Order, Union Electric Company D/B/A/Ameren Missouri *et al.* (Callaway Plant, Unit, *et al.*), CLI–11–05, __ NRC __ (Sept. 9, 2011) (slip op. at 41) which declined the petitioners' request to suspend any of the licensing or rulemaking proceedings pending resolution of these rulemaking petitions.

II. Petitioners

Each petitioner is an intervener group that has filed PRMs and contentions to suspend licensing proceedings while the NRC considers the environmental impacts of each licensing proceeding and the environmental implications in the Fukushima Task Force Report.

III. Petitions

All 15 PRMs cite the Fukushima Task Force Report dated July 12, 2011, currently under review by the Commission, as rationale for the petitions for rulemaking. The Fukushima Task Force was a group of NRC staff experts specifically selected to review the Fukushima Dai-ichi Accident and make recommendations applicable to power reactors in the United States.

In addition to the Fukushima Task Force Report, each petitioner cites the Declaration of Dr. Arjun Makhijani (the Declaration, ADAMS Accession No. ML11223A446) as rationale for their contentions and PRMs. Dr. Makhijani is the President of the Institute for Energy and Environmental Research (IEER) in Takoma Park, Maryland. The IEER provides scientific information and analyses to advocacy groups and policy makers on a wide range of technical topics such as energy and environmental issues. Dr. Makhijani declares that the Fukushima Task Force Report ''provides further support for [his] opinions that the Fukushima accident presents new and significant information regarding the risks to public health and safety and the environment posed by the operation of nuclear reactors and that the integration of this new information into the NRC's licensing process could affect the outcome of safety and environmental analyses for reactor licensing and relicensing decisions and the NRC's evaluation of the fitness of new reactor designs for certification.'' *See* page 2 in the Declaration.

The petitioners assert that the Fukushima Task Force Report and the Declaration demonstrate that the ''Fukushima accident has significant regulatory implications with respect to both severe reactor accidents and spent fuel pool accidents, because the Task Force Report recommends that mitigative measures for both of these types of accidents, which are not currently included in the design basis for nuclear reactors, should be added to the design basis and subject to mandatory safety regulation.''

Primarily, the petitioners request that the NRC rescind all regulations in Title 10 of the Code of Federal Regulations (10 CFR) part 51 (including 51.45, 51.53, and 51.95 and Appendix B to 10 CFR part 51) that ''reach generic conclusions about the environmental impacts of severe reactor and/or spent fuel pool accidents and therefore prohibit consideration of those impacts'' in reactor licensing proceedings.

Specifically, the petitioners request rescission of ''any NRC regulations that would prevent the NRC from complying with its obligation under the National Environmental Policy Act (NEPA).'' The petitioners also request rescission of NRC regulations that would impede consideration of ''the environmental implications of new and significant information discussed in the Fukushima Task Force Report regarding the regulatory implications of the Fukushima Dai-ichi nuclear accident'' in the licensing proceedings.

In support of their requests to suspend licensing proceedings, the petitioners quoted *Robertson* v. *Methow Valley Citizens Council,* 490 U.S. 332, 350 (1989) which states that ''NEPA requires that agencies consider the environmental impacts of their actions *before* they are taken, in order to ensure that 'important effects [of the licensing decision] will not be overlooked or underestimated only to be discovered after resources have been committed or

the die otherwise cast.' '' The petitioners assert that the ''NRC's obligation to comply with NEPA in this respect is independent of and in addition to the NRC's responsibilities under the Atomic Energy Act, and must be enforced to the 'fullest extent possible.' '' Thus, the petitioners argue that the ''NRC has a non-discretionary duty to suspend'' the subject licensing proceedings ''while it considers the environmental impacts of that decision, including the environmental implications of the Task Force Report with respect to severe reactor and spent fuel pool accidents.''

IV. Conclusion

The Commission is currently reviewing the Fukushima Task Force Report, including the issues presented in the 15 petitions for rulemaking. The petitioners specifically cite the Fukushima Task Force Report as rationale for the PRMs. The NRC will consider the issues raised by these PRMs through the process the Commission has established for addressing the recommendations from the Fukushima Task Force Report and is not providing a separate opportunity for public comment on the PRMs at this time.

Dated at Rockville, Maryland, this 2nd day of November 2011.

For the Nuclear Regulatory Commission.

Andrew L. Bates,

Acting Secretary of the Commission.

[FR Doc. 2011–29158 Filed 11–9–11; 8:45 am]

BILLING CODE 7590–01–P

FEDERAL HOUSING FINANCE AGENCY

12 CFR Part 1290

RIN 2590–AA38

Federal Home Loan Bank Community Support Amendments

AGENCY: Federal Housing Finance Agency.

ACTION: Proposed rule; request for comments.

SUMMARY: The Federal Housing Finance Agency (FHFA) is proposing to amend its community support regulation by requiring the Federal Home Loan Banks (Banks) to monitor and assess the eligibility of each Bank member for access to long-term advances through compliance with the regulation's Community Reinvestment Act of 1977 (CRA) and first-time homebuyer standards. The proposed rule would also replace the current practice in which members submit to FHFA biennial community support statements containing their most recent CRA evaluations. Instead, the Banks would verify a member's CRA rating from publicly-available information from the Federal Financial Institutions Examination Council (FFIEC) or the member's primary Federal banking regulatory agency. In addition, the Banks would be responsible for overseeing members' compliance with first-time homebuyer requirements.

DATES: Written comments must be received on or before February 8, 2012.

ADDRESSES: You may submit your comments, identified by regulatory information number (RIN) 2590–AA38, by any of the following methods:

- *Email:* Comments to Alfred M. Pollard, General Counsel, may be sent by email to *RegComments@fhfa.gov.* Please include ''RIN 2590–AA38'' in the subject line of the message.
- *Federal eRulemaking Portal*: *http://www.regulations.gov.* Follow the instructions for submitting comments. If you submit your comment to the *Federal eRulemaking Portal,* please also send it by email to FHFA at *RegComments@fhfa.gov* to ensure timely receipt by the Agency. Please include ''RIN 2590–AA38'' in the subject line of the message.
- *Hand Delivered/Courier:* The hand delivery address is: Alfred M. Pollard, General Counsel, Attention: Comments/RIN 2590–AA38, Federal Housing Finance Agency, Fourth Floor, 1700 G Street NW., Washington, DC 20552. The package should be logged in at the Guard Desk, First Floor, on business days between 9 a.m. and 5 p.m.
- *U.S. Mail, United Parcel Service, Federal Express, or Other Mail Service:* The mailing address for comments is: Alfred M. Pollard, General Counsel, Attention: Comments/RIN 2590–AA38, Federal Housing Finance Agency, Fourth Floor, 1700 G Street NW., Washington, DC 20552.

FOR FURTHER INFORMATION CONTACT: Charles E. McLean, Associate Director, (202) 408–2537, or Rafe R. Ellison, Senior Program Analyst, (202) 408–2968, Brian Doherty, Manager, (202) 408–2991, Office of Housing and Regulatory Policy, 1625 Eye Street NW., Washington, DC 20006. (These are not toll-free numbers.) For legal matters, contact Kevin Sheehan, Assistant General Counsel, (202) 414–8952, or Sharon Like, Managing Associate General Counsel, (202) 414–8950, Office of General Counsel, Federal Housing Finance Agency, Fourth Floor, 1700 G Street NW., Washington, DC 20552. (These are not toll-free numbers.) The telephone number for the Telecommunications Device for the Hearing Impaired is (800) 877–8339.

SUPPLEMENTARY INFORMATION:

I. Comments

FHFA invites comments on all aspects of the proposed rule, and will revise the language of the proposed rule as appropriate after taking all comments into consideration. Copies of all comments will be posted without change, including any personal information you provide, such as your name and address, on the FHFA Internet Web site at *http://www.fhfa.gov.* In addition, copies of all comments received will be available for examination by the public on business days between the hours of 10 a.m. and 3 p.m., at the Federal Housing Finance Agency, Fourth Floor, 1700 G Street NW., Washington, DC 20552. To make an appointment to inspect comments, please call the Office of General Counsel at (202) 414–6924.

II. Background

Section 10(g) of the Federal Home Loan Bank Act of 1932 (Bank Act), as amended by the Financial Institutions Reform, Recovery and Enforcement Act of 1989 (FIRREA), requires FHFA to adopt regulations establishing standards of community investment or service for members of Banks to maintain access to long-term advances. *See* 12 U.S.C. 1430(g). Section 10(g) further states that such regulations ''shall take into account factors such as a member's performance under the Community Reinvestment Act of 1977 and the member's record of lending to first-time homebuyers.'' *Id.*

Regulations implementing these community support requirements were first published on November 21, 1991. *See* 56 FR 58639 (Nov. 21, 1991). The original regulation required members to submit to FHFA community support statements comprising CRA evaluation reports and other supporting documentation. Members not subject to the CRA were required to submit documentation evidencing that they engaged in activities related to community support. The community support regulation was substantially amended to its current form by a final rule published on May 29, 1997. *See* 62 FR 28983. The amendments streamlined the regulatory mandate by requiring members to submit one-page community support statements, a significant reduction to the documentation standards of the original regulation. Under the community support regulation in effect today, FHFA generally reviews, on a biennial basis, each member's CRA performance and

record of lending to first-time homebuyers, to evaluate the member's compliance with the community support standards and determine ongoing eligibility for access to long-term Bank advances. *See* 12 CFR part 1290. A long-term advance is defined as an advance with a term to maturity greater than one year. 12 CFR 1290.1. In addition, FHFA requires each Bank to establish and maintain a community support program that provides technical assistance to its members and promotes and expands affordable housing finance. 12 CFR 1290.6.

III. Analysis of Proposed Rule

The proposed rule would revise the current community support regulation to require the Banks, as part of their community support programs, to evaluate and determine members' compliance with the community support requirements and whether members maintain access to long-term Bank advances. The Banks would be required to establish policies and procedures for evaluating and determining their members' community support compliance under their community support programs.

The Banks currently are required to adopt Member Product Policies addressing the Banks' management of their advances and other products offered to members, and are responsible for determining the terms and conditions under which they will make advances to their members. *See* § 917.4 of this title, part 1266 of this chapter. Requiring the Banks to adopt policies and procedures for community support evaluations, to conduct the evaluations, and to make decisions on any restrictions on access to long-term advances, would be consistent with their general advances underwriting responsibilities.

While FHFA would no longer be directly involved in determining members' community support compliance, FHFA would exercise its general regulatory authority to oversee the Banks' compliance with their community support program policies and procedures and the community support regulation, consistent with how FHFA regularly performs its oversight responsibilities with respect to the Banks' other mission-related activities.

The specific provisions of the proposed rule are discussed further below.

A. Definitions—Proposed § 1290.1

Proposed § 1290.1 would continue to set forth definitions applicable to the community support requirements in part 1290. A number of terms that are currently defined in § 1290.1 would remain substantially unchanged, including the definitions of ''Advisory Council,'' ''appropriate Federal banking agency,'' ''appropriate State regulator,'' ''Bank,'' ''CDFI Fund,'' ''community development financial institution or CDFI,'' ''CRA,'' ''CRA evaluation,'' ''FHFA,'' ''long-term advance,'' and ''targeted community lending.'' The term ''restriction on access to long-term advances'' would no longer be a separately defined term because the substance of the existing definition would be incorporated into proposed § 1290.3(a).

Section 1290.1 currently defines ''first-time homebuyer'' to include individuals who have not owned a principal residence during the three-year period prior to purchasing a home. The definition includes displaced homemakers and single parents that would meet this criterion but for prior ownership of a home with a spouse or residence in a home owned by a spouse. The current definition was based on the definition of ''first-time homebuyer'' under section 104 of the Cranston-Gonzalez National Affordable Housing Act. *See* 42 U.S.C. 12704. This statutory definition was subsequently amended to include individuals whose previous home was either a manufactured home not permanently affixed to a permanent foundation or a substandard home that could not be brought into compliance with relevant building codes for less than the cost of constructing a permanent structure. The current definition of ''first-time homebuyer'' in § 1290.1 does not reflect those amendments.

Proposed § 1290.1 would remove the definition of ''first-time homebuyer'' in order to be consistent with FHFA's Affordable Housing Program (AHP) regulation. The AHP regulation does not define the term, leaving the definition to be determined at the discretion of each Bank. *See* 12 CFR 1291.1. Accordingly, the terms ''displaced homemaker'' and ''single parent,'' which appear only in the ''first-time homebuyer'' definition, would also be removed. FHFA specifically requests comment on whether the definition of ''first-time homebuyer'' should be removed, whether the definition should be maintained in its current form, or whether the definition should be revised to reflect the statutory amendment that addressed previous ownership of manufactured or substandard housing.

B. Bank Community Support Program—Proposed § 1290.2

1. Community Support Program

Proposed § 1290.2(a) would set forth requirements that appear in current § 1290.6 related to the Bank's community support program, including that each Bank's program: Provide technical assistance to members; promote and expand affordable housing finance; and include an annual Targeted Community Lending Plan. *See also* 12 CFR 952.4. The proposed rule would add a new paragraph (a)(1) requiring each Bank to establish policies and procedures for the Bank's evaluation and determination of community support compliance by its members under its community support program. Each Bank's community support program policies would be required to include a CRA standard and a first-time homebuyer standard, as further discussed below. In addition, the Bank's community support program policies and procedures would include policies and procedures for verifying members' compliance with the two community support standards through collection and review of members' CRA ratings and their first-time homebuyer support statements, as well as any other appropriate information.

2. Evaluation and Determination of Compliance

Proposed § 1290.2(b) would require each Bank to evaluate and determine its members' compliance with the first-time homebuyer standard and the CRA standard, as applicable, pursuant to the Bank's community support program policies and procedures and the requirements of the regulation.

3. Public Comments

Under current § 1290.2, FHFA notifies the applicable Bank and the public by **Federal Register** notice of specific members selected for community support review. The Bank is also required to provide written notice to the members selected for community support review, its Advisory Council, and to nonprofit housing developers, community groups, and other interested parties in its district of the name and address of each member within its district that has to submit a Community Support Statement Form during the calendar quarter. In reviewing a member's Community Support Statement Form for evidence of the member's compliance with the community support requirements, FHFA is required to take into consideration any public comments received concerning members of all 12

Banks. In the previous two calendar years, FHFA has received only a small number of public comments concerning the community support programs and activities of members of the 12 Banks.

Under the proposed rule, the Banks would be required to assess a member's compliance with the community support requirements by determining whether a member received a CRA rating of Satisfactory or above, and determining whether the member engaged in eligible first-time homebuyer activities. Although the Banks do not publish in the **Federal Register**, solicitation by the Banks of public comments on members' community support programs and activities could be implemented by the Banks posting notices on their public Web sites. Under such a public notification process, each Bank would receive comments only with respect to its own members. Accordingly, in view of the importance of public engagement, proposed § 1290.2(c) would require the Banks to include notices on their Web sites inviting comments on any member's community support programs or activities, and to consider any comments received in determining the member's compliance. FHFA requests comment on whether the public comment process would be enhanced if the Banks were required to give public notice when specific members are selected for community support review, or whether such notice should be at the discretion of each Bank.

C. Restrictions on Access to Long-Term Advances—Proposed § 1290.3

Under current § 1290.5, if FHFA determines that a member should be placed on restriction from long-term advances for failure to meet the community support standards, FHFA notifies the Bank and the member of its determination and the reasons, and directs the Bank to deny the member's requests for long-term advances. Such members would also be denied access to the AHP and the Community Investment Cash Advances (CICA) Programs. If the member subsequently complies with the community support standards, FHFA informs the Bank that the member's access to long-term advances should be restored.

Proposed § 1290.3(a) would replace § 1290.5 and would provide that a Bank shall not approve a member's request for long-term advances unless the Bank has determined that the member is in compliance with the first-time homebuyer standard and the CRA standard, as applicable. A member subject to a long-term advance restriction who subsequently complies with the community support standards is eligible again for long-term advances and the long-term advance restriction shall be removed. The Bank would be required to develop policies and procedures that it determines are appropriate to ensure that it makes timely determinations and communicates with its members as necessary.

Current § 1290.5(d)(i) permits a member to seek from FHFA an exception to a long-term advances restriction if the member's appropriate Federal banking or State regulator determines that restricting the member's access to advances would adversely affect the member's safety and soundness. Since, under the proposed rule, the Banks would be determining whether members should be subject to long-term advances restrictions, proposed § 1290.3(b) would provide that members may submit requests for safety and soundness exceptions to their Bank, rather than to FHFA, for decision.

Consistent with the requirements of the current regulation, the member's written request shall contain a clear and concise statement of the basis for the request, and a statement from the member's appropriate Federal banking agency, or the member's appropriate State regulator for a member that is not subject to regulation or supervision by a Federal regulator, that application of the restriction may adversely affect the safety and soundness of the member. The Bank would be required to consider each written request within 30 calendar days of receipt.

Consistent with the current regulation, proposed § 1290.3(c) would provide that any member that is ineligible for long-term advances due to a failure to meet the community support requirements would also be ineligible to submit new applications under the Banks' AHP under 12 CFR part 1291, or under the Bank's CICA programs offered under 12 CFR part 952.

D. Exemption for CDFIs—Proposed § 1290.4

Section 1290.2(e) of the existing regulation provides that a member that has been certified as a community development financial institution (CDFI) by the CDFI Fund, other than a member that also is an insured depository institution or a CDFI credit union (as defined in 12 CFR 1263.1), is deemed to be in compliance with the community support standards by virtue of such certification and shall not be subject to community support review by any Bank. The proposed rule would relocate this provision unchanged to § 1290.4. For additional discussion of this provision, see the final rule entitled ''Federal Home Loan Bank Membership for Community Development Financial Institutions,'' 75 FR 678, 689–690 (Jan. 5, 2010).

E. CRA Standard—Proposed § 1290.5

1. Verification of CRA Rating

Proposed § 1290.5(a) would provide that for each member that is subject to the requirements of the CRA, the Bank shall, in accordance with its community support program policies and procedures, verify the member's rating in its most recent CRA evaluation with that member's appropriate Federal banking agency or from information made publicly available by FFIEC. As under the current regulation, the Banks would not be required to evaluate the compliance of credit unions and insurance companies under the CRA standard, as they are not subject to the CRA and are only subject to the first-time homebuyer standard.

In complying with proposed § 1290.5(a), the Banks would be required to routinely verify members' CRA ratings, which would eliminate the current gap in monitoring compliance with the CRA standard. Under the current regulation, FHFA reviews each member's CRA rating once every two years. This existing practice enables a member to maintain access to long-term advances for up two years after receiving a rating of ''Substantial Noncompliance.'' For example, if a member received a rating of ''Satisfactory'' on its July 2007 CRA evaluation and was notified that it needed to submit a community support statement in June 2009, the member could report to FHFA the results of the July 2007 CRA evaluation. However, if this same member then received a rating of ''Substantial Noncompliance'' on its July 2009 CRA evaluation, it would not have to report this information to FHFA until it is required to submit its next community support statement in June 2011. During this period where the most recent CRA rating is ''Substantial Noncompliance,'' the member would continue to have access to long-term advances.

FFIEC routinely publishes on its Web site the latest CRA ratings of financial institutions supervised by the Federal Reserve Board, Office of the Comptroller of the Currency, Federal Deposit Insurance Corporation, and Office of Thrift Supervision. The Banks could obtain CRA rating information from FFIEC's Web site to ensure that only members with ''Satisfactory'' or ''Outstanding'' ratings have access to long-term advances. The Banks should

be able to readily and routinely obtain the necessary CRA ratings information from the FFIEC Web site. Under proposed § 1290.2(a)(1), each Bank would be required to establish policies and procedures for its review of its members' CRA ratings.

2. Compliance With CRA Standard

Consistent with current § 1290.3(b), proposed § 1290.5(b) would provide that a member has met the CRA standard if the member received a rating of ''Outstanding'' or ''Satisfactory'' in its most recent CRA evaluation. The proposed rule would change the current regulation by requiring that the Banks allow access to long-term advances only for members with ratings of ''Satisfactory'' or higher on their most recent CRA evaluations.

Current § 1290.3(b)(2) provides that a member with a most recent CRA rating of ''Needs to Improve'' continues to have access to long-term advances but is placed on probation. If the member's subsequent CRA rating is ''Satisfactory'' or ''Outstanding,'' the member is removed from probation. A member with a CRA evaluation of ''Substantial Noncompliance'' on its most recent CRA evaluation, or with two consecutive CRA ratings of ''Needs to Improve'' on its most recent two CRA evaluations, is required to be placed on restriction from access to long-term advances. Current § 1290.5(a) also requires FHFA to require that members that fail to submit complete community support statements be placed on restriction from access to long-term advances. In order for access to long-term advances to be restored, a member must receive a CRA rating of ''Satisfactory'' or above on its next CRA evaluation and submit a complete community support statement.

FHFA has concluded that requiring at least a ''Satisfactory'' rating on a member's most recent CRA evaluation is an appropriate standard to be eligible for long-term advances because the standard may provide additional incentive for members to consistently meet the credit needs of the communities they serve. Additionally, based on historical evaluation rating data, removing the probationary period for members rated less than ''Satisfactory'' would likely affect or have an impact on only a small percentage of members. Slightly more than two percent of institutions that were subject to CRA evaluations from 2008 to 2010 received ratings of ''Needs to Improve.''

Because the proposed rule would prohibit Banks from making long-term advances to members after a single CRA rating of ''Needs to Improve,'' this policy could restrict a member's ability to use long-term advances to address the deficiencies that led to the ''Needs to Improve'' rating. FHFA specifically requests comment on whether members with a single CRA rating of ''Needs to Improve'' should be restricted from accessing long-term advances, or whether such members should be placed on probation, but maintain access pending their next CRA rating, similar to existing practice.

F. First-Time Homebuyer Standard—Proposed § 1290.6

1. Eligible First-Time Homebuyer Programs and Activities

Current § 1290.3(c)(1) and FHFA's existing Community Support Statement Form set forth the specific first-time homebuyer programs and activities that are eligible to meet the first-time homebuyer standard. Under proposed § 1290.6(a), the following substantially similar first-time homebuyer programs and activities would be eligible for purposes of meeting the first-time homebuyer standard:

- Member's established record of lending to first-time homebuyers;
- In-house first-time homebuyer programs, such as marketing plans and outreach programs;
- Other in-house lending products that serve first-time homebuyers;
- Underwriting standards that are appropriate for first-time homebuyers and consistent with safe and sound lending practices;
- Participation in non-governmental first-time homebuyer programs;
- Participation in federal government programs that serve first-time homebuyers;
- Participation in state or local government programs targeted to first-time homebuyers;
- Financial support or technical assistance to community groups or organizations that assist first-time homebuyers;
- Participation in loan consortia that make loans to first-time homebuyers;
- Participation in or support of special counseling or homeownership education targeted to first-time homebuyers; and
- Participation in investments or loans that support first-time homebuyer programs.

In addition, a Bank would have discretion to determine other first-time homebuyer programs and activities as eligible to meet the first-time homebuyer standard.

FHFA requests comment on whether the above list of programs and activities should be revised in any way. FHFA also requests comment on the degree of discretion the Banks should have in determining what first-time homebuyer programs and activities should be eligible for purposes of meeting the first-time homebuyer standard. For example, an alternative would be to allow each Bank at its discretion to determine all eligible first-time homebuyer programs and activities, which may enable the Bank to be more responsive to particular housing needs in its district. FHFA also requests comment on whether an alternative approach giving Banks more discretion to determine eligible first-time homebuyer programs and activities should include a requirement that a Bank consult with its Advisory Council in making such determination.

2. Compliance With First-Time Homebuyer Standard

As in the current regulation, proposed § 1290.6(b) would provide that a member that has received a rating in its most recent CRA evaluation of ''Outstanding'' would be deemed to have satisfied the first-time homebuyer standard.

For those members with a CRA rating below ''Outstanding'', the Bank would need to require the member to have engaged in one or more eligible first-time homebuyer programs or activities in the period covered by the most recent first-time homebuyer support statement to be eligible for a long-term advance.

FHFA requests comment on whether a member should be required to engage in more than one eligible first-time homebuyer program or activity in order to be in compliance with the first-time homebuyer standard, and if so, how many such programs or activities should be required. FHFA also requests comment on whether the regulation should specify a particular number of such programs or activities, or whether each Bank should have discretion to determine that number.

3. First-Time Homebuyer Support Statement

Under current § 1290.2(c), each member selected by FHFA for community support review is required to submit to FHFA a Community Support Statement Form prescribed by FHFA that contains both the member's CRA evaluation and identification of the member's eligible first-time homebuyer programs or activities from the list set forth in the Form. Under proposed § 1290.6(c), members would submit to the Bank first-time homebuyer support statements in which the member would identify and describe the eligible first-time homebuyer programs or activities in which it had engaged. Each Bank

would prescribe the form of the first-time homebuyer support statement, which would set forth all of the eligible first-time homebuyer programs and activities under proposed § 1290.6(a). Each member would be required to submit a completed first-time homebuyer support statement to its Bank at least once every two calendar years, which is consistent with FHFA's current biennial schedule for reviewing members' community support compliance. As in the current regulation, the accuracy of the first-time homebuyer support statement would be required to be certified by a senior officer of the member.

G. Reports—Proposed § 1290.7

The proposed rule would add a requirement for each Bank to submit a report annually by May 1 to FHFA that identifies the results of the Bank's community support compliance determinations for that year, including whether any members are subject to restrictions on access to long-term advances.

IV. Paperwork Reduction Act

A. Summary of Proposed Information Collection

FHFA has submitted an analysis of the revisions to the currently approved collection of information contained in this proposed rule to the Office of Management and Budget (OMB) for review in accordance with the Paperwork Reduction Act of 1995. *See* 44 U.S.C. 3507(d). Potential respondents are not required to respond to the collection of information unless the regulation collecting the information displays a currently valid control number assigned by OMB. *See* 44 U.S.C. 3512(a).

FHFA currently collects information biennially from Bank members regarding their compliance with the community support standards under existing part 1290. Existing part 1290 also permits Bank members whose access to long-term advances has been restricted for failure to meet the community support standards to apply directly to FHFA to remove the restriction under certain circumstances. The current collection of information has been approved by OMB, and the control number, OMB No. 2590–0005, will expire on October 31, 2012. The proposed rule would amend the community support requirements in part 1290 and require the Banks to collect compliance information from their members and process requests to remove restrictions on members' access to advances. The changes in the proposed rule would not substantively or materially modify the approved information collection with respect to the members' information collection burden, although it would materially decrease the time and hour burden on FHFA.

Need for and proposed use of information: Under the proposed rule, Bank members would be required to satisfy the community support requirements in order to maintain continued access to long-term advances. The proposed collection of information from each Bank member is necessary to enable the Banks to determine whether their members satisfy those community support requirements. Members may also find it necessary to submit information to the Banks to request the removal of restrictions on the members' access to long-term advances. The collection of information contained in part 1290 of the proposed rule is described more fully in part III of the **SUPPLEMENTARY INFORMATION**.

Respondents: Likely respondents are institutions that are members of a Bank.

B. Burden Estimate

FHFA estimates the total annualized hour burden for all members of the proposed information collection to be 4,115 hours. This estimate includes the biennial submission of first-time homebuyer support statements by all members, as well as any requests by members for removal of restrictions on access to long-term advances. FHFA estimates that an average of 4,100 members will submit responses each year regarding their first-time homebuyer programs and activities. FHFA estimates each response will take an average of .75 hours to prepare and process, for an annual total of 3,075 hours (4,100 member responses × .75 hours = 3,075 hours). FHFA estimates that the responses, on average, will take an additional .25 hours for review and certification by an appropriate senior officer, for an annual total of 1,025 hours (4,100 member responses × .25 hours = 1,025 hours).

FHFA estimates that an average of 15 members each year will submit requests to remove restrictions on access to long-term advances. FHFA estimates that these requests, on average, will take .75 hours to prepare and process, for an annual total of 11.25 hours (15 member requests × .75 hours = 11.25 hours). FHFA estimates that the requests, on average, will take an additional .25 hours for review by an appropriate senior officer, for an annual total of 3.75 hours (15 member requests × .25 hours = 3.75 hours).

Costs: FHFA estimates that there will be no annualized capital/start-up costs for the members to collect and submit the information.

C. Comment Request

FHFA will accept written comments concerning the accuracy of the burden estimates and suggestions for reducing the burden at the address listed above. Comments may also be submitted in writing to OMB (please also submit comments to FHFA for timely receipt and review) at the following address: Attention: Desk Officer for Federal Housing Finance Agency, Office of Information and Regulatory Affairs, Room 10102, New Executive Office Building, 725 17th Street NW., Washington, DC 20503.

Written comments are requested on: (1) Whether the proposed collection of information is necessary for the proper performance of FHFA functions, including whether the information has practical utility; (2) The accuracy of FHFA estimates of the burdens of the collection of information; (3) Ways to enhance the quality, utility, and clarity of the information collected; and (4) Ways to minimize the burden of the proposed collection of information on members, including through the use of automated collection techniques or other forms of information technology.

V. Regulatory Flexibility Act

The Regulatory Flexibility Act (5 U.S.C. 601 *et seq.*) requires that a regulation that has a significant economic impact on a substantial number of small entities, small businesses or small organizations must include an initial regulatory flexibility analysis describing the regulation's impact on small entities. Such an analysis need not be undertaken if the agency has certified that the regulation will not have a significant economic impact on a substantial number of small entities. 5 U.S.C. 605(b). FHFA has considered the impact of the proposed rule under the Regulatory Flexibility Act. The General Counsel of FHFA certifies that the proposed rule, if adopted as a final rule, is not likely to have a significant economic impact on a substantial number of small business entities because the regulation is applicable only to the Banks, which are not small entities for purposes of the Regulatory Flexibility Act.

List of Subjects in 12 CFR Part 1290

Credit, Federal home loan banks, Housing, Mortgages, Reporting and recordkeeping requirements.

Accordingly, for the reasons stated in the **SUPPLEMENTARY INFORMATION**, FHFA

proposes to amend title 12, chapter XII, of the Code of Federal Regulations to read as follows:

PART 1290—COMMUNITY SUPPORT REQUIREMENTS

Sec.
1290.1 Definitions.
1290.2 Bank community support program.
1290.3 Restrictions on access to long-term advances.
1290.4 Exemption for CDFIs.
1290.5 CRA standard.
1290.6 First-time homebuyer standard.
1290.7 Reports.

Authority: 12 U.S.C. 1430(g), 4511, 4513, 4526.

§ 1290.1 Definitions.

For purposes of this part:

Advisory Council means the Advisory Council each Bank is required to establish pursuant to section 10(j)(11) of the Federal Home Loan Bank Act, as amended (12 U.S.C. 1421 through 1449), and part 1291 of this chapter.

Appropriate Federal banking agency has the meaning set forth in section 3(q) of the Federal Deposit Insurance Act (12 U.S.C. 1813(q)) and, for federally insured credit unions, means the National Credit Union Administration.

Appropriate State regulator means any State officer, agency, supervisor, or other entity that has regulatory authority over, or is empowered to institute enforcement action against, a particular institution.

Bank means a Federal Home Loan Bank established under section 12 of the Federal Home Loan Bank Act, as amended (12 U.S.C. 1421 through 1449).

CDFI Fund means the Community Development Financial Institutions Fund established under section 104(a) of the Community Development Banking and Financial Institutions Act of 1994 (12 U.S.C. 4703(a)).

Community development financial institution or CDFI means an institution that is certified as a community development financial institution by the CDFI Fund under the Community Development Banking and Financial Institutions Act of 1994 (12 U.S.C. 4701 *et seq.*).

CRA means the Community Reinvestment Act of 1977, as amended (12 U.S.C. 2901 *et seq.*).

CRA evaluation means the public disclosure portion of the CRA performance evaluation provided by a Bank member's appropriate Federal banking agency.

FHFA means Federal Housing Finance Agency.

Long-term advance means an advance with an original term to maturity greater than one year.

Targeted community lending means providing financing for economic development projects for targeted beneficiaries, as defined in part 952 of this title.

§ 1290.2 Bank community support program.

(a) *Requirement.* Consistent with the safe and sound operation of the Bank, each Bank shall establish and maintain a community support program. A Bank shall, under its community support program:

(1) Establish policies and procedures for the Bank's evaluation and determination of community support compliance by the Bank's members;

(2) Provide technical assistance to members;

(3) Promote and expand affordable housing financing and financing for first-time homebuyers;

(4) Identify opportunities for members to expand financial and credit services in underserved neighborhoods and communities;

(5) Encourage members to increase their targeted community lending and affordable housing finance activities by providing incentives such as awards or technical assistance to nonprofit housing developers or community groups with outstanding records of participation in targeted community lending or affordable housing finance partnerships with members; and

(6) Include an annual Targeted Community Lending Plan, as required by § 952.4 of this title, approved by the Bank's board of directors and subject to modification, which shall require the Bank to—

(i) Conduct market research in the Bank's district;

(ii) Describe how the Bank will address identified credit needs and market opportunities in the Bank's district for targeted community lending;

(iii) Consult with its Advisory Council and with members, housing associates, and public and private economic development organizations in the Bank's district in developing and implementing its Targeted Community Lending Plan; and

(iv) Establish quantitative targeted community lending performance goals.

(b) *Bank evaluation and determination of community support compliance.* Pursuant to the Bank's community support program policies and procedures and the requirements of this part, each Bank shall evaluate and determine compliance of each of its members with the first-time homebuyer standard and the CRA standard, as applicable.

(c) *Public comments.* Each Bank shall include a notice on its Web site informing the public of the opportunity to submit comments on the community support programs and activities of Bank members and explaining how to submit such comments. In determining the community support compliance of a member, a Bank shall take into consideration any public comments it has received concerning the member.

§ 1290.3 Restrictions on access to long-term advances.

(a) *Restriction on access to long-term advances.* A Bank shall not approve a member's request for a long-term advance, including renewal of a maturing advance for a term to maturity greater than one year, unless the Bank has determined that the member is in compliance with the first-time homebuyer standard and the CRA standard, as applicable.

(b) *Safety and soundness exception.* A Bank may remove restrictions on a member's access to long-term advances imposed under this section if the Bank determines that application of the restriction may adversely affect the safety and soundness of the member. A member that seeks removal from restriction must submit a written request to the Bank to remove the restriction under this paragraph (b). Such written request shall contain a clear and concise statement of the basis for the request, and a statement from the member's appropriate Federal banking agency, or the member's appropriate State regulator for a member that is not subject to regulation or supervision by a Federal regulator, that application of the restriction may adversely affect the safety and soundness of the member. The Bank shall consider each written request within 30 calendar days of receipt.

(c) *Affordable Housing Program (AHP) and Community Investment Cash Advance (CICA) programs.* A member that is restricted from access to long-term advances under this part is not eligible to participate in the AHP under part 1291 of this chapter, or in any CICA program offered under part 952 of this title. The restriction in this paragraph (c) does not apply to AHP or CICA applications or funding approved before the date the restriction is imposed.

§ 1290.4 Exemption for CDFIs.

A member that has been certified as a CDFI by the CDFI Fund, other than a member that also is an insured depository institution or a CDFI credit union (as defined in § 1263.1 of this chapter), is deemed to be in compliance with the community support standards under this part by virtue of such certification and shall not be subject to

community support review by any Bank under this part.

§ 1290.5 CRA standard.

(a) *Verification of CRA rating.* For each member that is subject to the requirements of the CRA, the Bank shall, in accordance with its community support program policies and procedures, verify the rating in the member's most recent CRA evaluation with that member's appropriate Federal banking agency or from information made publicly available by the Federal Financial Institutions Examination Council.

(b) *Compliance with CRA standard.* A member shall be in compliance with the CRA standard if the member received a rating of ''Outstanding'' or ''Satisfactory'' in its most recent CRA evaluation.

§ 1290.6 First-time homebuyer standard.

(a) *Eligible first-time homebuyer programs and activities.* The following programs and activities are eligible first-time homebuyer programs and activities for purposes of determining Bank members' compliance with the first-time homebuyer standard:

(1) An established record of lending to first-time homebuyers;

(2) In-house first-time homebuyer programs, such as marketing plans and outreach programs;

(3) Other in-house lending products that serve first-time homebuyers;

(4) Underwriting standards that are appropriate for first-time homebuyers and consistent with safe and sound lending practices;

(5) Participation in non-governmental first-time homebuyer programs;

(6) Participation in federal government programs that serve first-time homebuyers;

(7) Participation in state or local government programs targeted to first-time homebuyers;

(8) Financial support or technical assistance to community groups or organizations that assist first-time homebuyers;

(9) Participation in loan consortia that make loans to first-time homebuyers;

(10) Participation in or support of special counseling or homeownership education targeted to first-time homebuyers;

(11) Participation in investments or loans that support first-time homebuyer programs; and

(12) Other first-time homebuyer programs or activities, as determined by a Bank in its discretion.

(b) *Compliance with first-time homebuyer standard.* A member shall be in compliance with the first-time homebuyer standard if the member has engaged in one or more eligible first-time homebuyer programs or activities in the period covered by the most recent first-time homebuyer support statement. A member that has received a rating in its most recent CRA evaluation of ''Outstanding'' shall be deemed to be in compliance with the first-time homebuyer standard.

(c) *First-time homebuyer support statement.* Each Bank shall prescribe the form of the first-time homebuyer support statement to be completed by its members, which shall set forth all of the eligible first-time homebuyer programs and activities under paragraph (a) of this section. The Bank shall require members to submit a completed first-time homebuyer support statement to the Bank at least once every two calendar years. The Bank shall require each member to identify and describe the eligible first-time homebuyer programs or activities engaged in by the member on the first-time homebuyer support statement. The accuracy of the first-time homebuyer support statement shall be certified by a senior officer of the member. A member that has received a rating in its most recent CRA evaluation of ''Outstanding'' shall not be required to submit a first-time homebuyer support statement.

§ 1290.7 Reports.

Each Bank shall submit a report annually by May 1 to FHFA that identifies the results of the Bank's community support compliance determinations for that year, including whether any members are subject to long-term advances restrictions.

Dated: November 4, 2011.

Edward J. DeMarco,

Acting Director, Federal Housing Finance Agency.

[FR Doc. 2011–29159 Filed 11–9–11; 8:45 am]

BILLING CODE 8070–01–P

DEPARTMENT OF LABOR

Mine Safety and Health Administration

30 CFR Part 75

RIN 1219–AB65

Proximity Detection Systems for Continuous Mining Machines in Underground Coal Mines

AGENCY: Mine Safety and Health Administration, Labor.

ACTION: Proposed rule; extension of comment period.

SUMMARY: In response to requests from interested parties, the Mine Safety and Health Administration (MSHA) is extending the comment period on the proposed rule addressing Proximity Detection Systems for Continuous Mining Machines in Underground Coal Mines. This extension gives commenters additional time to comment on the proposed rule. The proposal was published on August 31, 2011.

DATES: All comments must be received or postmarked by midnight Eastern Standard Time on November 28, 2011.

ADDRESSES: Comments must be identified with ''RIN 1219–AB65'' and may be sent by any of the following methods:

(1) *Federal e-Rulemaking Portal: http://www.regulations.gov.* Follow the instructions for submitting comments.

(2) *Facsimile:* (202) 693–9441. Include ''RIN 1219–AB65'' in the subject line of the message.

(3) *Regular Mail:* MSHA, Office of Standards, Regulations, and Variances, 1100 Wilson Boulevard, Room 2350, Arlington, Virginia 22209–3939.

(4) *Mail or Hand Delivery:* MSHA, Office of Standards, Regulations, and Variances, 1100 Wilson Boulevard, Room 2350, Arlington, Virginia. Sign in at the receptionist's desk on the 21st floor.

MSHA will post all comments without change, including any personal information provided. Access comments electronically on *http://www.regulations.gov* and on MSHA's Web site at *http://www.msha.gov/currentcomments.asp.* Review comments in person at the Office of Standards, Regulations, and Variances, 1100 Wilson Boulevard, Room 2350, Arlington, Virginia. Sign in at the receptionist's desk on the 21st floor.

MSHA maintains a list that enables subscribers to receive email notification when the Agency publishes rulemaking documents in the **Federal Register**. To subscribe, go to *http://www.msha.gov/subscriptions/subscribe.aspx.*

FOR FURTHER INFORMATION CONTACT: Roslyn B. Fontaine, Acting Director, Office of Standards, Regulations and Variances, MSHA, at *Fontaine.Roslyn@dol.gov* (*Email*), (202) 693–9440 (*Voice*), or (202) 693–9441 (*Fax*).

SUPPLEMENTARY INFORMATION:

Extension of Comment Period

On August 31, 2011 (76 FR 54163), MSHA published a proposed rule, Proximity Detection Systems for Continuous Mining Machines in Underground Coal Mines. MSHA conducted hearings on October 18, October 20, October 25, and October 27 of 2011. In response to commenters,

MSHA is providing additional time for interested parties to comment on the proposed rule. MSHA is extending the comment period from November 14, 2011 to November 28, 2011. All comments and supporting documentation must be received or postmarked by November 28, 2011.

Dated: November 7, 2011.

Joseph A. Main,

Assistant Secretary of Labor for Mine Safety and Health.

[FR Doc. 2011–29128 Filed 11–9–11; 8:45 am]

BILLING CODE 4510–43–P

DEPARTMENT OF VETERANS AFFAIRS

38 CFR Part 51

RIN 2900–AO02

Technical Revisions To Update Reference to the Required Assessment Tool for State Nursing Homes Receiving Per Diem Payments From VA

AGENCY: Department of Veterans Affairs.

ACTION: Proposed rule.

SUMMARY: The Department of Veterans Affairs (VA) proposes to amend its regulations to update the reference to the required resident assessment tool for State homes that receive per diem from VA for providing nursing home care to veterans. The proposed rule would require State nursing homes receiving per diem from VA to use the most recent version of the Centers for Medicare and Medicaid Services (CMS) Resident Assessment Instrument/Minimum Data Set (MDS), which is version 3.0. This will ensure that the standard used to assess veterans is the same as the standard applicable to Medicare and Medicaid beneficiaries.

DATES: Comments must be received by VA on or before January 9, 2012.

ADDRESSES: Written comments may be submitted through *http://www.regulations.gov;* by mail or hand delivery to the Director, Office of Regulation Policy and Management (02REG), Department of Veterans Affairs, 810 Vermont Avenue NW., Room 1068, Washington, DC 20420; or by fax to (202) 273–9026. Comments should indicate that they are submitted in response to ''RIN 2900–AO02, Technical Revisions to Update Reference to the Required Assessment Tool for State Nursing Homes Receiving Per Diem Payments From VA.'' Copies of comments received will be available for public inspection in the Office of Regulation Policy and Management, Room 1063B, between the hours of 8 a.m. and 4:30 p.m., Monday through Friday (except holidays). Please call (202) 461–4902 (this is not a toll-free number) for an appointment. In addition, during the comment period, comments may be viewed online through the Federal Docket Management System at *http://www.regulations.gov*.

FOR FURTHER INFORMATION CONTACT: Nancy Quest, Chief, State Veterans Home Clinical & Survey Oversight, Geriatrics and Extended Care Services (114), Veterans Health Administration, Department of Veterans Affairs, 810 Vermont Avenue NW., Washington, DC 20420, (202) 461–6064. (This is not a toll free number).

SUPPLEMENTARY INFORMATION: On April, 2009, VA published in the **Federal Register** a rule amending part 51 of title 38, Code of Federal Regulations, which set forth a mechanism for paying per diem to State homes providing nursing home care to eligible veterans. 74 FR 19426–01 (Apr. 29, 2009). This regulation went into effect on May 29, 2009. 38 CFR 51.110. This proposed rule would amend 38 CFR part 51 to update reference to the required resident assessment tool for State homes providing nursing home care, The Centers for Medicare and Medicaid Services (CMS) Resident Assessment Instrument/Minimum Data Set (MDS). The MDS is a core set of screening, clinical, and functional status elements that form the foundation of the comprehensive assessment for all residents of long term care facilities certified to participate in Medicare and Medicaid. While these certified facilities complete the MDS as a condition of receiving CMS payments for the provision of long term care to Medicare and Medicaid beneficiaries, the MDS is the standardized assessment instrument in long term care generally, and is designed to identify the health care needs of residents and generate a plan of care regardless of source of payment for the individual resident. VA therefore requires State homes receiving per diem for the provision of long term care to veterans to use the MDS, and to transmit data from the MDS electronically to the VA Austin Information Technology Center (AITC), for the purpose of monitoring certain care indicators for the benefit of veterans. The MDS version currently required by the regulation is MDS 2.0. 38 CFR 51.110(b)(1)(i).

On October 1, 2010, all CMS certified long term care facilities were required to update their assessment from MDS 2.0 to MDS 3.0. It is critical that VA mandate by regulation that State homes receiving per diem to provide long term care to veterans use the most up to date version of MDS as well. This will ensure that the most comprehensive assessment is performed for all veterans in State homes receiving per diem, and thereby that the highest standard of care is provided for those veterans. Indeed, if veterans are assessed under the former 2.0 standard, VA would essentially permit State homes to care for veterans using a lower assessment standard than that afforded other Federally funded patients.

The most significant change in the MDS 3.0 update requires that a direct interview be conducted with all residents who are able to be understood at least some of the time, such that staff must directly communicate with the resident to complete certain sections of the MDS. This is in contrast to staff relying on the medical record to complete certain MDS sections, as was permitted under MDS 2.0. The sections in MDS 3.0 which now require a direct interview to complete relate to the topics of cognition, mood, daily activities and preferences, and pain. For instance, a staff member providing rehabilitation services to a resident can no longer rely on a previous entry of a Registered Nurse in the medical record regarding a resident's level of pain to complete that staff member's section of the MDS. Direct interviewing ensures firsthand, real time monitoring in the MDS, improving accuracy of the entered information. We agree with CMS's changes because we believe that MDS 3.0 provides a more accurate assessment and will help ensure that the most comprehensive care plan is developed, and will help ensure that the highest standard of care is provided.

The MDS assessment process itself generates Quality Indicators, Quality Measures, and Resource Utilization Groups (RUGs). The RUGs are used in nurse staffing methodology to determine resident case mix, or how residents may be categorized so that resources are maximized to provide the highest standard of care. The MDS 3.0 update has increased the number of RUGs from 53 to 66. This increase reflects technological advances in healthcare and changes in resident and staff mix, as well as changes in healthcare practice. For example, conditions and services such as mood assessment and the pain interview have been added, and the behavior section has been modified, which now ensures these issues are considered in care planning. Because this change should lead to improved long term care, we believe that it is appropriate to require the

increased RUGS under our per diem regulations.

Other important changes in the MDS 3.0 update, which also ensure the most comprehensive assessment and that the highest standard of care is provided to veterans, include the following requirements: documentation of a significant change for any resident who enrolls in a hospice program; documentation of pressure ulcers present on admission; documentation of the type of injury sustained in a fall; and a resident assessment at discharge. The following have been eliminated: the reverse staging of pressure ulcers to document healing and documentation of the use of a catheter to show a patient is continent. Additionally, a section has been included concerning the return of the resident to the community.

We note that the vast majority of State homes receiving per diem from VA are CMS certified and receiving payments from CMS for the provision of long term care to Medicare and Medicaid beneficiaries, and, therefore, are already using MDS 3.0. These State homes do not use the former MDS 2.0 to separately assess veterans whose long term care is covered instead by per diem payments from VA. This rulemaking will affect only those State homes that are not CMS certified, do not receive CMS payments for the provision of long term care, and have not updated to MDS 3.0. We estimate that this will affect only 56 out of the 140 State homes who receive per diem payments from VA.

Effect of Rulemaking

The Code of Federal Regulations, as revised by this proposed rulemaking, would represent the exclusive legal authority on this subject. No contrary rules or procedures would be authorized. All VA guidance would be read to conform with this proposed rulemaking if possible, or, if not possible, such guidance would be superseded by this rulemaking.

Paperwork Reduction Act

This proposed rule contains no collections of information under the Paperwork Reduction Act (44 U.S.C. 3501–3521).

Regulatory Flexibility Act

The Secretary hereby certifies that this proposed regulatory amendment would not have a significant economic impact on a substantial number of small entities as they are defined in the Regulatory Flexibility Act, 5 U.S.C. 601–612. The reason for this certification is that these amendments would not directly affect any small entities, as the State homes that are subject to this rulemaking are State government entities under the control of State governments. All State homes are owned, operated, and managed by State governments except for a small number that are operated by entities under contract with State governments. These contractors are not small entities. Therefore, under 5 U.S.C. 605(b), this proposed amendment is exempt from the initial and final regulatory flexibility analysis requirements of sections 603 and 604.

Executive Orders 12866 and 13563

Executive Orders 12866 and 13563 direct agencies to assess the costs and benefits of available regulatory alternatives and, when regulation is necessary, to select regulatory approaches that maximize net benefits (including potential economic, environmental, public health and safety effects, and other advantages; distributive impacts; and equity). Executive Order 13563 (Improving Regulation and Regulatory Review) emphasizes the importance of quantifying both costs and benefits, reducing costs, harmonizing rules, and promoting flexibility. Executive Order 12866 (Regulatory Planning and Review) defines a ''significant regulatory action,'' which requires review by the Office of Management and Budget (OMB), as ''any regulatory action that is likely to result in a rule that may: (1) Have an annual effect on the economy of $100 million or more or adversely affect in a material way the economy, a sector of the economy, productivity, competition, jobs, the environment, public health or safety, or State, local, or Tribal governments or communities; (2) Create a serious inconsistency or otherwise interfere with an action taken or planned by another agency; (3) Materially alter the budgetary impact of entitlements, grants, user fees, or loan programs or the rights and obligations of recipients thereof; or (4) Raise novel legal or policy issues arising out of legal mandates, the President's priorities, or the principles set forth in this Executive Order.''

The economic, interagency, budgetary, legal, and policy implications of this regulatory action have been examined and it has been determined not to be a significant regulatory action under Executive Order 12866.

Unfunded Mandates

The Unfunded Mandates Reform Act requires, at 2 U.S.C. 1532, that agencies prepare an assessment of anticipated costs and benefits before issuing any rule that may result in expenditure by State, local, or Tribal governments, in the aggregate, or by the private sector, of $100 million or more (adjusted annually for inflation) in any given year. This rule would have no such effect on State, local, or Tribal governments, or on the private sector.

Catalog of Federal Domestic Assistance Numbers

The Catalog of Federal Domestic Assistance numbers and titles for the programs affected by this document are 64.005, Grants to States for Construction of State Home Facilities; 64.009, Veterans Medical Care Benefits; 64.010, Veterans Nursing Home Care; 64.015, Veterans State Nursing Home Care; 64.018, Sharing Specialized Medical Resources; 64.019, Veterans Rehabilitation, Alcohol and Drug Dependence.

Signing Authority

The Secretary of Veterans Affairs, or designee, approved this document and authorized the undersigned to sign and submit the document to the Office of the Federal Register for publication electronically as an official document of the Department of Veterans Affairs. John R. Gingrich, Chief of Staff, Department of Veterans Affairs, approved this document on November 4, 2011, for publication.

List of Subjects in 38 CFR Part 51

Administrative practice and procedure, Claims, Government contracts, Grant programs—health, Grant programs—veterans, Health care, Health facilities, Health professions, Health records, Mental health programs, Nursing homes, Reporting and recordkeeping requirements, Travel and transportation expenses, Veterans.

Dated: November 7, 2011.

Robert C. McFetridge,

Director of Regulation Policy and Management, Office of the General Counsel, Department of Veterans Affairs.

For the reasons stated in the preamble, the Department of Veterans Affairs proposes to amend 38 CFR part 51 as follows:

PART 51—PER DIEM FOR NURSING HOME CARE OF VETERANS IN STATE HOMES

1. The authority citation for part 51 continues to read as follows:

Authority: 38 U.S.C. 101, 501, 1710, 1720, 1741–1743; and as stated in specific sections.

2. Amend § 51.110(b)(1)(i) by removing the phrase ''Version 2.0'' and adding, in its place, ''Version 3.0''.

[FR Doc. 2011–29157 Filed 11–9–11; 8:45 am]

BILLING CODE 8320–01–P

ENVIRONMENTAL PROTECTION AGENCY

40 CFR Parts 52 and 81

[EPA–R04–OAR–2011–0316–201156; FRL–9489–7]

Approval and Promulgation of Implementation Plans and Designation of Areas for Air Quality Planning Purposes; Alabama; Redesignation of the Birmingham 1997 Annual Fine Particulate Matter Nonattainment Area to Attainment

AGENCY: Environmental Protection Agency (EPA).

ACTION: Proposed rule.

SUMMARY: On May 2, 2011, the State of Alabama, through the Alabama Department of Environmental Management (ADEM), Air Division, submitted a request for EPA to redesignate the Birmingham fine particulate matter ($PM_{2.5}$) nonattainment area (hereafter referred to as the ''Birmingham Area'' or ''Area'') to attainment for the 1997 Annual $PM_{2.5}$ National Ambient Air Quality Standards (NAAQS); and to approve a State Implementation Plan (SIP) revision containing a maintenance plan for the Area. The Birmingham 1997 Annual $PM_{2.5}$ nonattainment area is comprised of Jefferson and Shelby Counties in their entireties and a portion of Walker County. EPA is proposing to approve the redesignation request for the Birmingham Area, along with the related SIP revision, including Alabama's 2009 emissions inventory for the Area and Alabama's plan for maintaining attainment of the $PM_{2.5}$ standard in the Area. EPA is also proposing to approve the motor vehicle emission budgets (MVEBs) for nitrogen oxides (NO_X) and $PM_{2.5}$ for the year 2024 for the Birmingham Area. These actions are being proposed pursuant to the Clean Air Act (CAA or Act) and its implementing regulations.

DATES: Comments must be received on or before December 12, 2011.

ADDRESSES: Submit your comments, identified by Docket ID No. EPA–R04–OAR–2011–0316, by one of the following methods:

1. *www.regulations.gov:* Follow the on-line instructions for submitting comments.

2. *Email: benjamin.lynorae@epa.gov.*

3. *Fax:* (404) 562–9019.

4. *Mail:* EPA–R04–OAR–2011–0316, Regulatory Development Section, Air Planning Branch, Air, Pesticides and Toxics Management Division, U.S. Environmental Protection Agency, Region 4, 61 Forsyth Street SW., Atlanta, Georgia 30303–8960.

5. *Hand Delivery or Courier:* Ms. Lynorae Benjamin, Chief, Regulatory Development Section, Air Planning Branch, Air, Pesticides and Toxics Management Division, U.S. Environmental Protection Agency, Region 4, 61 Forsyth Street SW., Atlanta, Georgia 30303–8960. Such deliveries are only accepted during the Regional Office's normal hours of operation. The Regional Office's official hours of business are Monday through Friday, 8:30 to 4:30, excluding Federal holidays.

Instructions: Direct your comments to Docket ID No. EPA–R04–OAR–2011–0316. EPA's policy is that all comments received will be included in the public docket without change and may be made available online at *www.regulations.gov*, including any personal information provided, unless the comment includes information claimed to be Confidential Business Information (CBI) or other information whose disclosure is restricted by statute. Do not submit through *www.regulations.gov* or email, information that you consider to be CBI or otherwise protected. The *www.regulations.gov* Web site is an ''anonymous access'' system, which means EPA will not know your identity or contact information unless you provide it in the body of your comment. If you send an email comment directly to EPA without going through *www.regulations.gov,* your email address will be automatically captured and included as part of the comment that is placed in the public docket and made available on the Internet. If you submit an electronic comment, EPA recommends that you include your name and other contact information in the body of your comment and with any disk or CD–ROM you submit. If EPA cannot read your comment due to technical difficulties and cannot contact you for clarification, EPA may not be able to consider your comment. Electronic files should avoid the use of special characters, any form of encryption, and be free of any defects or viruses. For additional information about EPA's public docket visit the EPA Docket Center homepage at *http://www.epa.gov/epahome/dockets.htm.*

Docket: All documents in the electronic docket are listed in the *www.regulations.gov* index. Although listed in the index, some information is not publicly available, *i.e.,* CBI or other information whose disclosure is restricted by statute. Certain other material, such as copyrighted material, is not placed on the Internet and will be publicly available only in hard copy form. Publicly available docket materials are available either electronically in *www.regulations.gov* or in hard copy at the Regulatory Development Section, Air Planning Branch, Air, Pesticides and Toxics Management Division, U.S. Environmental Protection Agency, Region 4, 61 Forsyth Street SW., Atlanta, Georgia 30303–8960. EPA requests that if at all possible, you contact the person listed in the **FOR FURTHER INFORMATION CONTACT** section to schedule your inspection. The Regional Office's official hours of business are Monday through Friday, 8:30 to 4:30, excluding Federal holidays.

FOR FURTHER INFORMATION CONTACT: Joel Huey of the Regulatory Development Section, in the Air Planning Branch, Air, Pesticides and Toxics Management Division, U.S. Environmental Protection Agency, Region 4, 61 Forsyth Street SW., Atlanta, Georgia 30303–8960. Joel Huey may be reached by phone at (404) 562–9104, or via electronic mail at *huey.joel@epa.gov.*

SUPPLEMENTARY INFORMATION:

Table of Content

I. What are the actions EPA is proposing to take?
II. What is the background for EPA's proposed actions?
III. What are the criteria for redesignation?
IV. Why is EPA proposing these actions?
V. What is EPA's analysis of the request?
VI. What is EPA's analysis of Alabama's proposed NO_X and $PM_{2.5}$ MVEBs for the Birmingham area?
VII. What is the status of EPA's adequacy determination for the proposed NO_X and $PM_{2.5}$ MVEBs for 2024 for the Birmingham area?
VIII. What is EPA's analysis of the proposed 2009 base year emissions inventory for the Birmingham area?
IX. Proposed Action on the Redesignation Request and Maintenance Plan SIP Revision Including Proposed Approval of the 2024 NO_X and $PM_{2.5}$ MVEBs for the Birmingham Area
X. What is the effect of EPA's proposed actions?
XI. Statutory and Executive Order Reviews

I. What are the actions EPA is proposing to take?

EPA is proposing to take the following three separate but related actions, some of which involve multiple elements: (1) To redesignate the Birmingham Area to attainment for the 1997 Annual $PM_{2.5}$

NAAQS, provided EPA approves the emissions inventory submitted with the maintenance plan; (2) to approve, under CAA section 172(c)(3), the emissions inventory submitted with the maintenance plan; and (3) to approve into the Alabama SIP, under section 175A of the CAA, Alabama's 1997 Annual $PM_{2.5}$ NAAQS maintenance plan, including the associated MVEBs (EPA is also notifying the public of the status of EPA's adequacy determination for the Birmingham Area MVEBs for the $PM_{2.5}$ NAAQS). These actions are summarized below and described in greater detail throughout this notice of proposed rulemaking.

First, EPA proposes to determine that, if EPA finalizes approval of the 2009 baseline emissions inventory for the Birmingham Area, the Area has met the requirements for redesignation under section 107(d)(3)(E) of the CAA. In this action, EPA is proposing to approve a request to change the legal designation of Jefferson and Shelby Counties in their entireties and the designated portion of Walker County in the Birmingham Area from nonattainment to attainment for the 1997 Annual $PM_{2.5}$ NAAQS. As discussed below, the emissions inventory is being proposed for approval today.

Second, EPA is proposing to approve Alabama's 2009 emissions inventory for the Birmingham Area (under CAA section 172(c)(3)). Alabama selected 2009 as the attainment emissions inventory year for the Birmingham Area. This attainment inventory identifies a level of emissions in the Area that is sufficient to attain the 1997 Annual $PM_{2.5}$ NAAQS and is a current, comprehensive inventory that meets the requirements of section 172(c)(3).

Third, EPA is proposing to approve Alabama's 1997 Annual $PM_{2.5}$ NAAQS maintenance plan for the Birmingham Area as meeting the requirements of section 175A (such approval being one of the CAA criteria for redesignation to attainment status). The recently promulgated Cross State Air Pollution Rule (CSAPR) [1] requires reductions of NO_X and SO_2 associated with power plants to be permanent and enforceable. The maintenance plan is designed to help keep the Birmingham Area in attainment of the 1997 Annual $PM_{2.5}$ NAAQS through 2024. Consistent with the CAA, the maintenance plan that EPA is proposing to approve today also includes NO_X and $PM_{2.5}$ MVEBs for the year 2024 for the Birmingham Area. EPA is proposing to approve (into the Alabama SIP) the 2024 MVEBs that are included as part of Alabama's maintenance plan for the 1997 Annual $PM_{2.5}$ NAAQS.

On a matter related to this third action, EPA is also notifying the public of the status of EPA's adequacy process for the newly established NO_X and $PM_{2.5}$ MVEBs for 2024 for the Birmingham Area. The Adequacy comment period for the Birmingham Area 2024 MVEBs began on March 24, 2011, with EPA's posting of the availability of this submittal on EPA's Adequacy Web site (*http://www.epa.gov/otaq/stateresources/transconf/currsips.htm*). The Adequacy comment period for these MVEBs closed on April 25, 2011. No adverse comments were received during the Adequacy public comment period. Please see section VII of this proposed rulemaking for further explanation of this process and for more details on the MVEBs.

Today's notice of proposed rulemaking is in response to Alabama's May 2, 2011, SIP submittal. That document addresses the specific issues summarized above and the necessary elements described in section 107(d)(3)(E) of the CAA for redesignation of the Birmingham Area to attainment of the 1997 Annual $PM_{2.5}$ NAAQS.

II. What is the background for EPA's proposed actions?

Fine particle pollution can be emitted directly or formed secondarily in the atmosphere. The main precursors of $PM_{2.5}$ are sulfur dioxide (SO_2), NO_X, ammonia and volatile organic compounds (VOCs). Unless otherwise noted by the State or EPA, ammonia and VOCs are presumed to be insignificant contributors to $PM_{2.5}$ formation, whereas SO_2 and NO_X are presumed to be significant contributors to $PM_{2.5}$ formation. Sulfates are a type of secondary particle formed from SO_2 emissions of power plants and industrial facilities. Nitrates, another common type of secondary particle, are formed from NO_X emissions of power plants, automobiles, and other combustion sources.

On July 18, 1997, EPA promulgated the first air quality standards for $PM_{2.5}$. EPA promulgated an annual standard at a level of 15.0 micrograms per cubic meter ($\mu g/m^3$), based on a 3-year average of annual mean $PM_{2.5}$ concentrations. In the same rulemaking, EPA promulgated a 24-hour standard of 65 $\mu g/m^3$, based on a 3-year average of the 98th percentile of 24-hour concentrations. On October 17, 2006, at 71 FR 61144, EPA retained the annual average NAAQS at 15.0 $\mu g/m^3$ but revised the 24-hour NAAQS to 35 $\mu g/m^3$, based again on the 3-year average of the 98th percentile of 24-hour concentrations.[2] Under EPA regulations at 40 CFR part 50, the primary and secondary 1997 Annual $PM_{2.5}$ NAAQS are attained when the annual arithmetic mean concentration, as determined in accordance with 40 CFR part 50, Appendix N, is less than or equal to 15.0 $\mu g/m^3$ at all relevant monitoring sites in the subject area over a 3-year period.

On January 5, 2005, at 70 FR 944, and supplemented on April 14, 2005, at 70 FR 19844, EPA designated the Birmingham Area as nonattainment for the 1997 $PM_{2.5}$ NAAQS based upon air quality data for calendar years 2001–2003. In that action, EPA defined the 1997 $PM_{2.5}$ Birmingham nonattainment area to include Jefferson and Shelby Counties in their entireties and a portion Walker County. On November 13, 2009, at 74 FR 58688, EPA promulgated designations for the 2006 $PM_{2.5}$ NAAQS, designating the Birmingham Area (with the same boundaries as for the 1997 $PM_{2.5}$ nonattainment area) as nonattainment for the 2006 24-hour $PM_{2.5}$ NAAQS based upon air quality data for calendar years 2006–2008. That action also clarified that the Birmingham Area was classified unclassifiable/attainment for the 1997 24-hour $PM_{2.5}$ NAAQS. EPA did not promulgate designations for the annual average NAAQS promulgated in 2006 since that NAAQS was essentially identical to the 1997 Annual $PM_{2.5}$ NAAQS. Therefore, the Birmingham Area is designated nonattainment for the Annual NAAQS promulgated in 1997 and for the 24-hour NAAQS promulgated in 2006. Today's action only addresses the designation for the Annual NAAQS promulgated in 1997.

All 1997 $PM_{2.5}$ NAAQS areas were designated under subpart 1 of title I, part D, of the CAA. Subpart 1 contains the general requirements for nonattainment areas for any pollutant governed by a NAAQS and is less prescriptive than the other subparts of title I, part D. On April 25, 2007 (72 FR 20664), EPA promulgated its $PM_{2.5}$ implementation rule, codified at 40 CFR

[1] *See* ''Federal Implementation Plans to Reduce Interstate Transport of Fine Particulate Matter and Ozone in 27 States; Correction of SIP Approvals for 22 States'' (76 FR 48208, August 8, 2011).

[2] In response to legal challenges of the annual standard promulgated in 2006, the United States Court of Appeals for the District of Columbia Circuit (D.C. Circuit) remanded this NAAQS to EPA for further consideration. *See American Farm Bureau Federation and National Pork Producers Council, et al.* v. *EPA.* 559 F.3d 512 (D.C. Circuit 2009). However, given that the 1997 and 2006 Annual NAAQS are essentially identical, attainment of the 1997 Annual NAAQS would also indicate attainment of the remanded 2006 Annual NAAQS.

part 51, subpart Z, in which the Agency provided guidance for state and Tribal plans to implement the $PM_{2.5}$ NAAQS. This rule, at 40 CFR 51.1004(c), specifies some of the regulatory impacts of attaining the NAAQS, as discussed below.

On May 12, 2005, EPA published the Clean Air Interstate Rule (CAIR), which addressed the interstate transport requirements of the CAA and required states to significantly reduce SO_2 and NO_X emissions from power plants (70 FR 25162). The associated Federal Implementation Plans (FIPs) were published on April 28, 2006 (71 FR 25328). However, on July 11, 2008, the D.C. Circuit Court issued its decision to vacate and remand both CAIR and the associated CAIR FIPs in their entirety (*North Carolina* v. *EPA,* 531 F.3d 836 (D.C. Cir., 2008)). EPA petitioned for rehearing, and the Court issued an order remanding CAIR to EPA without vacating either CAIR or the CAIR FIPs (*North Carolina* v. *EPA,* 550 F.3d 1176 (D.C. Cir., 2008)). The Court left CAIR in place to ''temporarily preserve the environmental values covered by CAIR'' until EPA replaces it with a rule consistent with the Court's opinion. *Id.* at 1178. The Court directed EPA to ''remedy CAIR's flaws'' consistent with its July 11, 2008, opinion but declined to impose a schedule on EPA for completing that action. *Id.* As a result of these court rulings, the power plant emission reductions that resulted solely from the development, promulgation, and implementation of CAIR, and the associated contribution to air quality improvement that occurred solely as a result of CAIR in the Birmingham Area could not be considered to be permanent.

On August 8, 2011, EPA published CSAPR in the **Federal Register** under the title, ''Federal Implementation Plans to Reduce Interstate Transport of Fine Particulate Matter and Ozone in 27 States; Correction of SIP Approvals for 22 States'' (76 FR 48208, August 8, 2011) to address interstate transport of emissions and resulting secondary air pollutants and to replace CAIR. The CAIR emission reduction requirements limit emissions in Alabama and states upwind of Alabama through 2011, and CSAPR requires similar or greater reductions in the relevant areas in 2012 and beyond. The emission reductions that CSAPR mandates may be considered to be permanent and enforceable. In turn, the air quality improvement in the Birmingham Area that has resulted from electric generating units (EGUs) emission reductions associated with CAIR (as well as the additional air quality improvement that would be expected to result from full implementation of CSAPR) may also be considered to be permanent and enforceable. EPA proposes that the requirement in section 107(d)(3)(E)(iii) has now been met because the emission reduction requirements of CAIR address emissions through 2011 and EPA has now promulgated CSAPR, which requires similar or greater reductions in the relevant areas in 2012 and beyond. Because the emission reduction requirements of CAIR are enforceable through the 2011 control period, and because CSAPR has now been promulgated to address the requirements previously addressed by CAIR and gets similar or greater reductions in the relevant areas in 2012 and beyond, EPA is proposing to determine that the pollutant transport part of the reductions that led to attainment in the Birmingham Area can now be considered permanent and enforceable. Therefore, EPA proposes to find that the transport requirement of CAA section 107(d)(3)(E)(iii) has been met for the Birmingham Area.

The 3-year ambient air quality data for 2008–2010 indicated no violations of the 1997 $PM_{2.5}$ NAAQS for the Birmingham Area. As a result, on May 2, 2011, Alabama requested redesignation of the Birmingham Area to attainment for the 1997 Annual $PM_{2.5}$ NAAQS. The redesignation request included three years of complete, quality-assured ambient air quality data for the 1997 Annual $PM_{2.5}$ NAAQS for 2008–2010, indicating that the 1997 Annual $PM_{2.5}$ NAAQS had been achieved for the Birmingham Area. Under the CAA, nonattainment areas may be redesignated to attainment if sufficient, complete, quality-assured data is available for the Administrator to determine that the area has attained the standard and the area meets the other CAA redesignation requirements in section 107(d)(3)(E). From 2008 through the present, the annual $PM_{2.5}$ design values for the Birmingham Area have declined. While annual $PM_{2.5}$ concentrations are dependent on a variety of conditions, the overall downtrend in $PM_{2.5}$ concentrations in the Birmingham Area can be attributed to the reduction of emissions, as will be discussed in more detail in section V of this proposed rulemaking.

III. What are the criteria for redesignation?

The CAA provides the requirements for redesignating a nonattainment area to attainment. Specifically, section 107(d)(3)(E) of the CAA allows for redesignation providing the following criteria are met: (1) The Administrator determines that the area has attained the applicable NAAQS; (2) the Administrator has fully approved the applicable implementation plan for the area under section 110(k); (3) the Administrator determines that the improvement in air quality is due to permanent and enforceable reductions in emissions resulting from implementation of the applicable SIP and applicable Federal air pollutant control regulations and other permanent and enforceable reductions; (4) the Administrator has fully approved a maintenance plan for the area as meeting the requirements of section 175A; and (5) the state containing such area has met all requirements applicable to the area under section 110 and part D of title I of the CAA.

EPA has provided guidance on redesignation in the General Preamble for the Implementation of title I of the CAA Amendments of 1990 (April 16, 1992, 57 FR 13498, and supplemented on April 28, 1992, 57 FR 18070) and has provided further guidance on processing redesignation requests in the following documents:

1. ''Procedures for Processing Requests to Redesignate Areas to Attainment,'' Memorandum from John Calcagni, Director, Air Quality Management Division, September 4, 1992 (hereafter referred to as the ''Calcagni Memorandum'');
2. ''State Implementation Plan (SIP) Actions Submitted in Response to Clean Air Act (CAA) Deadlines,'' Memorandum from John Calcagni, Director, Air Quality Management Division, October 28, 1992; and
3. ''Part D New Source Review (Part D NSR) Requirements for Areas Requesting Redesignation to Attainment,'' Memorandum from Mary D. Nichols, Assistant Administrator for Air and Radiation, October 14, 1994.

IV. Why is EPA proposing these actions?

On May 2, 2011, the State of Alabama, through ADEM, requested the redesignation of the Birmingham Area to attainment for the 1997 Annual $PM_{2.5}$ NAAQS. EPA's evaluation indicates that the Birmingham Area has attained the 1997 Annual $PM_{2.5}$ NAAQS and meets the requirements for redesignation set forth in section 107(d)(3)(E), including the maintenance plan requirements under section 175A of the CAA. As a result, EPA is proposing to take the three related actions summarized in section I of this notice.

V. What is EPA's analysis of the request?

As stated above, in accordance with the CAA, EPA proposes in today's action to: (1) Redesignate the Birmingham Area to attainment for the 1997 Annual $PM_{2.5}$ NAAQS; (2) approve the Birmingham Area emissions inventory submitted with the maintenance plan; and (3) approve into the Alabama SIP Birmingham's 1997 Annual $PM_{2.5}$ NAAQS maintenance plan, including the associated MVEBs. These actions are based upon EPA's determination that the Birmingham Area continues to attain the 1997 Annual $PM_{2.5}$ NAAQS and that all other redesignation criteria have been met for the Birmingham Area, provided EPA approves the emissions inventory submitted with the maintenance plan. The five redesignation criteria provided under CAA section 107(d)(3)(E) are discussed in greater detail for the Area in the following paragraphs of this section.

Criteria (1)—The Birmingham Area Has Attained the 1997 Annual $PM_{2.5}$ NAAQS

For redesignating a nonattainment area to attainment, the CAA requires EPA to determine that the area has attained the applicable NAAQS (CAA section 107(d)(3)(E)(i)). EPA is proposing to determine that the Birmingham Area continues to attain the 1997 Annual $PM_{2.5}$ NAAQS. For $PM_{2.5}$, an area may be considered to be attaining the 1997 Annual $PM_{2.5}$ NAAQS if it meets the 1997 Annual $PM_{2.5}$ NAAQS, as determined in accordance with 40 CFR 50.13 and Appendix N of part 50, based on three complete, consecutive calendar years of quality-assured air quality monitoring data. To attain these NAAQS, the annual arithmetic mean concentration, as determined in accordance with 40 CFR part 50, Appendix N, is less than or equal to 15.0 $\mu g/m^3$ at all relevant monitoring sites in the subject area over a 3-year period. The relevant data must be collected and quality-assured in accordance with 40 CFR part 58 and recorded in the EPA Air Quality System (AQS). The monitors generally should have remained at the same location for the duration of the monitoring period required for demonstrating attainment.

On June 29, 2011, at 76 FR 38023, EPA determined that the Birmingham Area was attaining the 1997 Annual $PM_{2.5}$ NAAQS. For that action EPA reviewed $PM_{2.5}$ monitoring data from monitoring stations in the Birmingham Area for the 1997 Annual $PM_{2.5}$ NAAQS for 2008–2010. These data have been quality-assured and are recorded in AQS. EPA has reviewed more recent data which indicates that the Birmingham Area continues to attain the 1997 Annual $PM_{2.5}$ NAAQS beyond the submitted 3-year attainment period of 2008–2010. The annual arithmetic mean of the $PM_{2.5}$ concentrations for 2008–2010 and the 3-year average of these values (*i.e.,* design values) are summarized in Table 1.

TABLE 1—DESIGN VALUE CONCENTRATIONS FOR THE BIRMINGHAM 1997 ANNUAL $PM_{2.5}$ AREA

[$\mu g/m^3$]

Location	County	Monitor ID	Annual arithmetic mean concentrations			3-Year design values
			2008	2009	2010	2008–2010
North Birmingham	Jefferson	01–073–0023	15.5	11.7	13.8	13.7
McAdory	Jefferson	01–073–1005	12.2	10.4	11.8	11.5
Bruce Shaw Road (Providence)	Jefferson	01–073–1009	10.8	9.6	10.1	10.2
Asheville Road (Leeds)	Jefferson	01–073–1010	13.2	10.3	12.1	11.9
Wylam	Jefferson	01–073–2003	14.4	11.3	12.4	12.7
Hoover	Jefferson	01–073–2006	12.1	10.3	11.8	11.4
Pinson High School	Jefferson	01–073–5002	11.9	9.9	11.0	10.9
Corner School Road	Jefferson	01–073–5003	11.5	9.7	10.7	10.6
Pelham High School	Shelby	01–117–0006	11.6	9.8	13.9	10.9
Highland Avenue (Walker Co.)	Walker	01–127–0002	11.7	10.1	11.3	11.0

The 3-year design value for 2008–2010 submitted by Alabama for redesignation of the Birmingham Area is 13.7 $\mu g/m^3$, which meets the NAAQS as described above. Data available to date in AQS for 2011, which have not yet been certified, indicate the Birmingham Area continues to attain the 1997 Annual $PM_{2.5}$ NAAQS and that ambient annual concentrations of $PM_{2.5}$ continue to decline. As mentioned above, on June 29, 2011 (76 FR 38023) EPA published a clean data determination for the Birmingham Area for the 1997 Annual $PM_{2.5}$ NAAQS. In today's action, EPA is proposing to determine that the Area is continuing to attain the 1997 $PM_{2.5}$ NAAQS. EPA will not go forward with the redesignation if the Area does not continue to attain until the time that EPA finalizes the redesignation. As discussed in more detail below, the State of Alabama has committed to continue monitoring in this Area in accordance with 40 CFR part 58.

Criteria (5)—Alabama Has Met All Applicable Requirements Under Section 110 and Part D of Title I of the CAA; and Criteria (2)—Alabama Has a Fully Approved SIP Under Section 110(k) for the Birmingham Area

For redesignating a nonattainment area to attainment, the CAA requires EPA to determine that the state has met all applicable requirements under section 110 and part D of title I of the CAA (CAA section 107(d)(3)(E)(v)) and that the state has a fully approved SIP under section 110(k) for the area (CAA section 107(d)(3)(E)(ii)). EPA proposes to find that Alabama has met all applicable SIP requirements for the Birmingham Area under section 110 of the CAA (general SIP requirements) for purposes of redesignation. Additionally, EPA proposes to find that the Alabama SIP satisfies the criterion that it meet applicable SIP requirements for purposes of redesignation under part D of title I of the CAA (requirements specific to 1997 Annual $PM_{2.5}$ nonattainment areas) in accordance with section 107(d)(3)(E)(v). Further, EPA proposes to determine that the SIP is fully approved with respect to all requirements applicable for purposes of redesignation in accordance with section 107(d)(3)(E)(ii). In making these determinations, EPA ascertained which requirements are applicable to the Area and, if applicable, that they are fully approved under section 110(k). SIPs

must be fully approved only with respect to requirements that were applicable prior to submittal of the complete redesignation request.

a. The Birmingham Area Has Met All Applicable Requirements Under Section 110 and part D of the CAA

General SIP requirements. Section 110(a)(2) of title I of the CAA delineates the general requirements for a SIP, which include enforceable emissions limitations and other control measures, means, or techniques; provisions for the establishment and operation of appropriate devices necessary to collect data on ambient air quality; and programs to enforce the limitations. General SIP elements and requirements are delineated in section 110(a)(2) of title I, part A of the CAA. These requirements include, but are not limited to, the following: submittal of a SIP that has been adopted by the state after reasonable public notice and hearing; provisions for establishment and operation of appropriate procedures needed to monitor ambient air quality; implementation of a source permit program; provisions for the implementation of part C requirements (Prevention of Significant Deterioration (PSD)) and provisions for the implementation of part D requirements (New Source Review (NSR) permit programs); provisions for air pollution modeling; and provisions for public and local agency participation in planning and emission control rule development.

Section 110(a)(2)(D) requires that SIPs contain certain measures to prevent sources in a state from significantly contributing to air quality problems in another state. To implement this provision, EPA has required certain states to establish programs to address the interstate transport of air pollutants (*e.g.,* NO_X SIP Call,[3] CAIR,[4] and CSAPR). The section 110(a)(2)(D) requirements for a state are not linked with a particular nonattainment area's designation and classification in that state. EPA believes that the requirements linked with a particular nonattainment area's designation and classifications are the relevant measures to evaluate in reviewing a redesignation request. The transport SIP submittal requirements, where applicable, continue to apply to a state regardless of the designation of any one particular area in the state. Thus, EPA does not believe that the CAA's interstate transport requirements should be construed to be applicable requirements for purposes of redesignation. However, as discussed later in this notice, addressing pollutant transport from other states is an important part of an area's maintenance demonstration.

In addition, EPA believes other section 110 elements that are neither connected with nonattainment plan submissions nor linked with an area's attainment status are applicable requirements for purposes of redesignation. The area will still be subject to these requirements after the area is redesignated. The section 110 and part D requirements which are linked with a particular area's designation and classification are the relevant measures to evaluate in reviewing a redesignation request. This approach is consistent with EPA's existing policy on applicability (*i.e.,* for redesignations) of conformity and oxygenated fuels requirements, as well as with section 184 ozone transport requirements. See Reading, Pennsylvania, proposed and final rulemakings (61 FR 53174–53176, October 10, 1996), (62 FR 24826, May 7, 1997); Cleveland-Akron-Lorain, Ohio, final rulemaking (61 FR 20458, May 7, 1996); and Tampa, Florida, final rulemaking at (60 FR 62748, December 7, 1995). See also the discussion on this issue in the Cincinnati, Ohio, redesignation (65 FR 37890, June 19, 2000), and in the Pittsburgh, Pennsylvania, redesignation (66 FR 50399, October 19, 2001).

EPA has not yet completed rulemaking on a submittal from Alabama dated September 23, 2009, addressing ''infrastructure SIP'' elements required under CAA section 110(a)(2). However, these are statewide requirements that are not a consequence of the nonattainment status of the Birmingham Area. As stated above, EPA believes that section 110 elements not linked to an area's nonattainment status are not applicable for purposes of redesignation. Therefore, notwithstanding the fact that EPA has not yet completed rulemaking on Alabama's submittal for the $PM_{2.5}$ infrastructure SIP elements of section 110(a)(2), EPA believes it has approved all SIP elements under section 110 that must be approved as a prerequisite for redesignating the Birmingham Area to attainment.

Title I, Part D requirements. EPA proposes that if EPA approves Alabama's base year emissions inventory, which is part of the maintenance plan submittal, the Alabama SIP will meet applicable SIP requirements under part D of the CAA. As discussed in greater detail below, EPA believes the emissions inventory is approvable because the 2009 direct $PM_{2.5}$, SO_2, and NO_X emissions for Alabama were developed consistent with EPA guidance for emissions inventories and represent a comprehensive, accurate and current inventory as required by CAA section 172(c)(3).

Part D, subpart 1 applicable SIP requirements. EPA has determined that if the approval of the base year emissions inventory, discussed in section VIII of this rulemaking, is finalized, the Alabama SIP will meet the applicable SIP requirements for the Birmingham Area for purposes of redesignation under title I, part D of the CAA. Subpart 1 of part D sets forth the basic nonattainment requirements applicable to all nonattainment areas. All areas that were designated nonattainment for the 1997 Annual $PM_{2.5}$ NAAQS were designated under this subpart of the CAA and the requirements applicable to them are contained in sections 172 and 176.

For purposes of evaluating this redesignation request, the applicable part D, subpart 1 SIP requirements for all nonattainment areas are contained in sections 172(c)(1)–(9) and in section 176. A thorough discussion of the requirements contained in section 172 can be found in the General Preamble for Implementation of title I (57 FR 13498, April 16, 1992).

Subpart 1 Section 172 Requirements. Section 172(c)(1) requires the plans for all nonattainment areas to provide for the implementation of all Reasonable Available Control Measures (RACM) as expeditiously as practicable and to provide for attainment of the national primary ambient air quality standards. EPA interprets this requirement to

[3] On October 27, 1998 (63 FR 57356), EPA issued a NO_X SIP Call requiring the District of Columbia and 22 states to reduce emissions of NO_X in order to reduce the transport of ozone and ozone precursors. In compliance with EPA's NO_X SIP Call, Alabama developed rules governing the control of NO_X emissions from EGUs, major non-EGU industrial boilers, major cement kilns, and internal combustion engines. On December 27, 2002, EPA approved Alabama's rules as fulfilling Phase I (67 FR 78987).

[4] On May 12, 2005 (70 FR 25162), EPA promulgated CAIR, which required 28 upwind States and the District of Columbia to revise their SIPs to include control measures that would reduce emissions of SO_2 and NO_X. Various aspects of CAIR rule were petitioned in court and on December 23, 2008, the U.S. Court of Appeals for the District of Columbia Circuit remanded CAIR to EPA (*see Alabama* v. *EPA,* 550 F.3d 1176 (DC Circuit, December 23, 2008)), which left CAIR in place to ''temporarily preserve the environmental values covered by CAIR'' until EPA replaces it with a rule consistent with the Court's ruling. The Court directed EPA to remedy various areas of the rule that were petitioned consistent with its July 11, 2008 (*see Alabama* v. *EPA,* 531 F.3d 836 (DC Circuit, July 11, 2008)), opinion, but declined to impose a schedule on EPA for completing that action. *Id.* Therefore, CAIR is currently in effect in Alabama.

impose a duty on all nonattainment areas to consider all available control measures and to adopt and implement such measures as are reasonably available for implementation in each area as components of the area's attainment demonstration. Under section 172, states with nonattainment areas must submit plans providing for timely attainment and meeting a variety of other requirements. However, pursuant to 40 CFR 51.1004(c), EPA's June 29, 2011, determination that the Birmingham area was attaining the Annual $PM_{2.5}$ standard suspended Alabama's obligation to submit most of the attainment planning requirements that would otherwise apply. Specifically, the determination of attainment suspended Alabama's obligation to submit an attainment demonstration and planning SIPs to provide for reasonable further progress (RFP), RACM, and contingency measures under section 172(c)(9).

The General Preamble for Implementation of Title I (57 FR 13498, April 16, 1992) also discusses the evaluation of these requirements in the context of EPA's consideration of a redesignation request. The General Preamble sets forth EPA's view of applicable requirements for purposes of evaluating redesignation requests when an area is attaining a standard (General Preamble for Implementation of Title I (57 FR 13498, April 16, 1992)).

Because attainment has been reached in the Birmingham Area, no additional measures are needed to provide for attainment, and section 172(c)(1) requirements for an attainment demonstration and RACM are no longer considered to be applicable for purposes of redesignation as long as the Area continues to attain the standard until redesignation. See also 40 CFR 51.1004(c).

The RFP plan requirement under section 172(c)(2) is defined as progress that must be made toward attainment. This requirement is not relevant for purposes of redesignation because EPA has determined that the Birmingham Area has monitored attainment of the 1997 Annual $PM_{2.5}$ NAAQS. *See* General Preamble, 57 FR 13564. *See* also 40 CFR 51.1004 (c). In addition, because the Birmingham Area has attained the 1997 Annual $PM_{2.5}$ NAAQS and is no longer subject to an RFP requirement, the requirement to submit the section 172(c)(9) contingency measures is not applicable for purposes of redesignation. *Id.*

Section 172(c)(3) requires submission and approval of a comprehensive, accurate, and current inventory of actual emissions. As part of Alabama's redesignation request for the Birmingham Area, Alabama submitted a 2009 base year emissions inventory. As discussed below in section VIII, EPA is proposing to approve the 2009 base year inventory submitted with the redesignation request as meeting the section 172(c)(3) emissions inventory requirement.

Section 172(c)(4) requires the identification and quantification of emissions for major new and modified stationary sources to be allowed in an area, and section 172(c)(5) requires source permits for the construction and operation of new and modified major stationary sources anywhere in the nonattainment area. EPA has determined that, since PSD requirements will apply after redesignation, areas being redesignated need not comply with the requirement that an NSR program be approved prior to redesignation, provided that the area demonstrates maintenance of the NAAQS without part D NSR. A more detailed rationale for this view is described in a memorandum from Mary Nichols, Assistant Administrator for Air and Radiation, dated October 14, 1994, entitled, ''Part D New Source Review Requirements for Areas Requesting Redesignation to Attainment.'' Alabama has demonstrated that the Birmingham Area will be able to maintain the NAAQS without part D NSR in effect, and therefore Alabama need not have fully approved part D NSR programs prior to approval of the redesignation request. Nonetheless, Alabama currently has a fully approved part D NSR program in place. Alabama's PSD program will become effective in the Birmingham Area upon redesignation to attainment. Section 172(c)(6) requires the SIP to contain control measures necessary to provide for attainment of the NAAQS. Because attainment has been reached, no additional measures are needed to provide for attainment.

Section 172(c)(7) requires the SIP to meet the applicable provisions of section 110(a)(2). As noted above, EPA believes the Alabama SIP meets the requirements of section 110(a)(2) applicable for purposes of redesignation.

Section 176 Conformity Requirements. Section 176(c) of the CAA requires states to establish criteria and procedures to ensure that federally supported or funded projects conform to the air quality planning goals in the applicable SIP. The requirement to determine conformity applies to transportation plans, programs and projects that are developed, funded or approved under title 23 of the United States Code (U.S.C.) and the Federal Transit Act (transportation conformity) as well as to all other federally supported or funded projects (general conformity). State transportation conformity SIP revisions must be consistent with Federal conformity regulations relating to consultation, enforcement and enforceability that EPA promulgated pursuant to its authority under the CAA.

EPA interprets the conformity SIP requirements[5] as not applying for purposes of evaluating a redesignation request under section 107(d) because state conformity rules are still required after redesignation and Federal conformity rules apply where state rules have not been approved. *See Wall* v. *EPA,* 265 F.3d 426 (6th Cir. 2001) (upholding this interpretation); *see also* 60 FR 62748 (December 7, 1995) (redesignation of Tampa, Florida). Thus, the Birmingham Area has satisfied all applicable requirements for purposes of redesignation under section 110 and part D of title I of the CAA.

b. The Birmingham Area Has a Fully Approved Applicable SIP Under Section 110(k) of the CAA

If EPA issues a final approval of the base year emissions inventory, EPA will have fully approved the applicable Alabama SIP for the Birmingham 1997 Annual $PM_{2.5}$ nonattainment area under section 110(k) of the CAA for all requirements applicable for purposes of redesignation. EPA may rely on prior SIP approvals in approving a redesignation request (*see* Calcagni Memorandum at p. 3; *Southwestern Pennsylvania Growth Alliance* v. *Browner,* 144 F.3d 984, 989–90 (6th Cir. 1998); *Wall,* 265 F.3d 426) plus any additional measures it may approve in conjunction with a redesignation action (*see* 68 FR 25426 (May 12, 2003) and citations therein). Following passage of the CAA of 1970, Alabama has adopted and submitted, and EPA has fully approved at various times, provisions addressing the various 1997 Annual $PM_{2.5}$ NAAQS SIP elements applicable in the Birmingham Area (May 31, 1972, 37 FR 10842; July 13, 2011, 76 FR 41100).

As indicated above, EPA believes that the section 110 elements that are neither connected with nonattainment plan submissions nor linked to an area's nonattainment status are not applicable requirements for purposes of

[5] CAA Section 176(c)(4)(E) requires states to submit revisions to their SIPs to reflect certain Federal criteria and procedures for determining transportation conformity. Transportation conformity SIPs are different from the MVEBs that are established in control strategy SIPs and maintenance plans.

redesignation. In addition, EPA believes that since the part D subpart 1 requirements did not become due prior to submission of the redesignation request, they are also not applicable requirements for purposes of redesignation. *Sierra Club* v. *EPA,* 375 F.3d 537 (7th Cir. 2004); 68 FR 25424, 25427 (May 12, 2003) (redesignation of the St. Louis-East St. Louis Area to attainment of the 1-hour ozone NAAQS). With the approval of the emissions inventory, EPA will have approved all Part D subpart 1 requirements applicable for purposes of this redesignation.

Criteria (3)—The Air Quality Improvement in the Birmingham 1997 Annual $PM_{2.5}$ NAAQS Nonattainment Area Is Due to Permanent and Enforceable Reductions in Emissions Resulting From Implementation of the SIP and Applicable Federal Air Pollution Control Regulations and Other Permanent and Enforceable Reductions

For redesignating a nonattainment area to attainment, the CAA requires EPA to determine that the air quality improvement in the area is due to permanent and enforceable reductions in emissions resulting from implementation of the SIP and applicable Federal air pollution control regulations and other permanent and enforceable reductions (CAA section 107(d)(3)(E)(iii)). EPA believes that Alabama has demonstrated that the observed air quality improvement in the Birmingham Area is due to permanent and enforceable reductions in emissions resulting from implementation of the SIP, Federal measures, and other state adopted measures.

State, local and Federal measures enacted in recent years have resulted in permanent emission reductions. Most of these emission reductions are enforceable through regulations. A few non-regulatory measures also result in emission reductions.

The state and local measures that have been implemented to date and relied upon by Alabama to demonstrate attainment and/or maintenance include local NO_X controls on cement plants in the Area due to the 8-hour ozone contingency plan, Jefferson and Shelby County burn bans, and voluntary on-road and off-road diesel retrofit projects.

As shown in Table 2, below, reasonably available control technology (RACT) PM controls installed in the Birmingham Area have reduced direct $PM_{2.5}$ emissions by approximately 62 tons per year (tpy) as of the end of 2009. These controls are associated with the Birmingham Annual $PM_{2.5}$ Attainment Demonstration SIP, submitted to EPA on March 13, 2009.

TABLE 2—SUMMARY OF RACT CONTROLS IN THE BIRMINGHAM AREA

Facility	Source	RACT Controls	$PM_{2.5}$ reduction (tpy)	Installation date
W.J. Bullock	Crucible furnaces	Baghouse	3.891	2009
McWane Pipe	Charge handling area	Wet suppression	0.385	2008
Sloss Industries	Coal piles	Wet suppression	0.398	2008
American Cast Iron Pipe	Charge make-up	Wet suppression	11.91	2008
	Roads & process areas	Paving	3.58	2007/2008
	Cupola melting furnace	New Cupola/Bag house & spray suppression	5.84	2007/2008
	Sand & cement silos	Baghouse	0.09	2008
Nucor Steel	Meltshop fugitives	Baghouse & physical improvements	28.1	2008
U.S. Pipe	Cupola charge make-up	Wet suppression	1.818	2008
	Sand & cement silos	Bin vents	5.93	2008
Total			61.942	

In addition, closures of certain facilities have resulted in continued reductions of local $PM_{2.5}$ emissions in the Birmingham Area. In late 2009, W.J. Bullock and Sloss Mineral Wool in Jefferson County announced plans to cease operations, resulting in additional $PM_{2.5}$ emission reductions of 0.13 tpy and 130 tpy, respectively. In March 2010, U.S. Pipe ceased production, resulting in an additional emission reduction of 46 tpy of $PM_{2.5}$. In total, the RACT controls and facility closures amount to reductions of greater than eight percent of direct $PM_{2.5}$ point source emissions in Jefferson County.

Furthermore, control equipment installed at utilities in the Birmingham Area have decreased emissions of NO_X and SO_2. These reductions, prompted by the NO_X SIP Call and CAIR, are summarized in Table 3 below. In 2007, flue gas desulfurization systems were added to units 8–10 of Alabama Power Company's (APC) Gorgas Plant in anticipation of CAIR. Selective catalytic reduction (SCR) systems were installed on units 3 and 4 at APC Miller Plant in 2003 as a result of the NO_X SIP Call, with a consent decree requiring year round operation beginning in 2008 in preparation for CAIR. The year round SCR operation requirements have been incorporated into the facilities' title V operating permits and are thus enforceable.

TABLE 3—SUMMARY OF EMISSIONS AND CONTROLS AT UTILITIES IN THE BIRMINGHAM AREA [6]

Facility	Date control installed		Emissions reductions from 2006–2009 (tpy)		
	NO_X	SO_2	NO_X	SO_2	Percent
APC Miller Unit 3	2008		4,680		71
APC Miller Unit 4	2008		3,786		70
APC Gorgas Unit 8		2007		10,007	96
APC Gorgas Unit 9		2007		9,975	96

TABLE 3—SUMMARY OF EMISSIONS AND CONTROLS AT UTILITIES IN THE BIRMINGHAM AREA [6]—Continued

Facility	Date control installed		Emissions reductions from 2006–2009 (tpy)		
	NO_X	SO_2	NO_X	SO_2	Percent
APC Gorgas Unit 10		2007		40,779	97
APC Gaston Unit 5*		2010		43,579	78
Total Reductions			8,466	104,341	

*Gaston Unit 5 data reflects reductions from 2006–2010.

The Federal measures that have been implemented include the following:

Tier 2 vehicle standards. In addition to requiring NO_X controls, the Tier 2 rule reduced the allowable sulfur content of gasoline to 30 parts per million (ppm) starting in January of 2006. Most gasoline sold in Alabama prior to this had a sulfur content of approximately 300 ppm.

Heavy-duty gasoline and diesel highway vehicle standards. The second phase of the standards and testing procedures, which began in 2007, reduces particulate matter (PM) and NO_X from heavy-duty highway engines and also reduces highway diesel fuel sulfur content to 15 ppm. The total program is expected to achieve a 90 and 95 percent reduction in PM and NO_X emissions from heavy-duty highway engines, respectively.

Nonroad spark-ignition engines and recreational engines standards. Tier 1 of this standard, implemented in 2004, and Tier 2, implemented in 2007, have reduced and will continue to reduce PM emissions.

Large nonroad diesel engine standards. Promulgated in 2004, this rule is being phased in between 2008 and 2014. This rule will reduce sulfur content in nonroad diesel fuel and, when fully implemented, will reduce NO_X and direct $PM_{2.5}$ emissions by over 90 percent from these engines.

NO_X SIP Call. On October 27, 1998 (63 FR 57356), EPA issued a NO_X SIP Call requiring the District of Columbia and 22 states to reduce emissions of NO_X. Affected states were required to comply with Phase I of the SIP Call beginning in 2004, and Phase II beginning in 2007. Emission reductions resulting from regulations developed in response to the NO_X SIP Call are permanent and enforceable.

CAIR and CSAPR. As previously discussed, the remanded CAIR, originally promulgated to reduce transported pollution, was left in place to ''temporarily preserve the environmental values covered by CAIR'' until EPA replaced it with a rule consistent with the Court's opinion. To remedy CAIR's flaws, EPA promulgated the final CSAPR on August 8, 2011. CSAPR addresses the interstate transport requirements of the CAA with respect to the 1997 ozone, 1997 $PM_{2.5}$ and 2006 $PM_{2.5}$ NAAQS. As noted previously, the requirements of CAIR address emissions through the 2011 control period and CSAPR requires similar or greater emission reductions in the relevant areas in 2012 and beyond.

Because $PM_{2.5}$ concentrations in the Birmingham area are impacted by the transport of sulfates and nitrates, the area's air quality is affected by regulation of SO_2 and NO_X emissions from upwind power plants. Table 4, below, presents statewide EGU emissions data compiled by EPA's Clean Air Markets Division for the years 2002 and 2009. Emissions for 2009 reflect implementation of CAIR. Table 4 shows that Alabama and states impacting the Birmingham Area for the Annual $PM_{2.5}$ NAAQS, as indicated in CSAPR, reduced NO_X and SO_2 emissions from EGUs by 995,606 tpy and 1,901,135 tpy, respectively, between 2002 and 2009.

TABLE 4—COMPARISON OF 2002 AND 2009 STATEWIDE EGU NO_X AND SO_2 EMISSIONS (TPY) FOR STATES IMPACTING THE BIRMINGHAM AREA FOR THE ANNUAL $PM_{2.5}$ NAAQS [6]

State	NO_X			SO_2		
	2002	2009	Net change 2002–2009	2002	2009	Net change 2002–2009
Alabama	161,559	49,609	−111,950	448,248	277,972	−170,276
Georgia	146,456	57,566	−88,890	512,654	262,258	−250,396
Illinois	174,247	72,286	−101,961	353,699	229,364	−124,335
Indiana	281,146	110,969	−170,177	778,868	413,726	−365,142
Kentucky	198,599	78,767	−119,832	482,653	252,002	−230,651
Ohio	370,497	95,785	−274,712	1,132,069	600,687	−531,382
Tennessee	155,996	27,912	−128,084	336,995	108,042	−228,953
Total	1,488,500	492,894	−995,606	4,045,186	2,144,051	−1,901,135

As was noted earlier, EPA promulgated CSAPR to address interstate transport of emissions and resulting secondary air pollutants and to replace CAIR. CAIR, among other things, required emission reductions that contributed to the air quality improvement in the Birmingham Area. CSAPR requires substantial reductions of SO_2 and NO_X emissions from EGUs across most of the Eastern United States, with implementation beginning on January 1, 2012. CAIR will continue to be implemented through 2011, and will be replaced by CSAPR beginning in 2012. CSAPR requires reductions of NO_X and SO_2 emissions to levels below the levels that led to attainment of the 1997 24-hour $PM_{2.5}$ standard in the Birmingham Area. Given the remanded status of CAIR, air quality improvement

[6] Data in Tables 3 and 4 reflect reported actual emissions from the Clean Air Markets Division Database *http://camddataandmaps.epa.gov/gdm/index.cfm?fuseaction=emissions.wizard.*

from the EGU reductions could not be considered permanent at the time ADEM submitted its request for redesignation of the Birmingham Area. However, since that time CSAPR has been finalized, which mandates even greater reductions than have already occurred under CAIR and, more importantly, more reductions than are needed to maintain the standard in the Area. The reductions of EGU emissions of SO_2 and NO_X contributed to the air quality improvement in the Birmingham Area. Therefore, the final promulgation of CSAPR, in combination with the other measures cited by Alabama and described above, ensure that the emission reductions that led the Area to attain the 1997 Annual $PM_{2.5}$ NAAQS can be considered permanent and enforceable for purposes of section 107(d)(3)(E)(iii).

Criteria (4)—The Birmingham Area Has a Fully Approved Maintenance Plan Pursuant to Section 175A of the CAA

For redesignating a nonattainment area to attainment, the CAA requires EPA to determine that the area has a fully approved maintenance plan pursuant to section 175A of the CAA (CAA section 107(d)(3)(E)(iv)). In conjunction with its request to redesignate the Birmingham Area to attainment for the 1997 Annual $PM_{2.5}$ NAAQS, ADEM submitted a SIP revision to provide for the maintenance of the 1997 Annual $PM_{2.5}$ NAAQS for at least 10 years after the effective date of redesignation to attainment. EPA believes this maintenance plan meets the requirements for approval under section 175A of the CAA.

a. What is required in a maintenance plan?

Section 175A of the CAA sets forth the elements of a maintenance plan for areas seeking redesignation from nonattainment to attainment. Under section 175A, the plan must demonstrate continued attainment of the applicable NAAQS for at least 10 years after the Administrator approves a redesignation to attainment. Eight years after the redesignation, the State must submit a revised maintenance plan which demonstrates that attainment will continue to be maintained for the 10 years following the initial 10-year period. To address the possibility of future NAAQS violations, the maintenance plan must contain contingency measures as EPA deems necessary to assure prompt correction of any future 1997 Annual $PM_{2.5}$ violations. The Calcagni Memorandum provides further guidance on the content of a maintenance plan, explaining that a maintenance plan should address five requirements: the attainment emissions inventory, maintenance demonstration, monitoring, verification of continued attainment, and a contingency plan. As is discussed more fully below, EPA finds that Alabama's maintenance plan includes all the necessary components and is thus proposing to approve it as a revision to the Alabama SIP.

b. Attainment Emissions Inventory

The Birmingham Area attained the 1997 Annual $PM_{2.5}$ NAAQS based on monitoring data for the 3-year period from 2008–2010. Alabama selected 2009 as the attainment emissions inventory year. The attainment inventory identifies a level of emissions in the Area that is sufficient to attain the 1997 Annual $PM_{2.5}$ NAAQS. Alabama began development of the attainment inventory by first generating a baseline emissions inventory for the Birmingham Area. As noted above, the year 2009 was chosen as the base year for developing a comprehensive emissions inventory for direct $PM_{2.5}$ and the primary $PM_{2.5}$ precursors, SO_2 and NO_X, for which projected emissions could be developed for 2012, 2015, 2018, 2021, and 2024. ADEM used actual point source emissions data for 2009 for all sources in Jefferson County and a majority of sources in Shelby County. The Visibility Improvement—State and Tribal Association of the Southeast (VISTAS) projected 2009 emissions were used only where actual emissions were unavailable. The projected inventory included with the maintenance plan estimates emissions forward to 2024, which is beyond the 10-year interval required in section 175A of the CAA. In addition to comparing the final year of the plan, 2024, to the base year, 2009, Alabama compared interim years to the baseline to demonstrate that these years are also expected to show continued maintenance of the Annual $PM_{2.5}$ standard.

The emissions inventory is composed of four major types of sources: point, area, on-road mobile and non-road mobile. The future year emissions inventories have been estimated using projected rates of growth in population, traffic, economic activity, expected control programs, and other parameters. Due to the remand of CAIR, ADEM did not include any emissions reductions expected under the rule past 2012. Promulgation of CSAPR ensured that reductions expected under CAIR would remain, thus EPA considers ADEM's projections to be conservative estimates. Non-road mobile emissions estimates were based on the EPA's NONROAD2008a non-road mobile model, with the exception of the railroad locomotives, commercial marine, and aircraft engine. These emissions are estimated by taking activity data, such as landings and takeoffs, and multiplying by an Economic Growth Analysis System (EGAS) emission factor. On-road mobile source emissions were calculated using EPA's MOVES2010a mobile emission factors model. The 2009 SO_2, NO_X and $PM_{2.5}$ emissions for the Birmingham Area, as well as the emissions for other years, were developed consistent with EPA guidance and are summarized in Tables 5 through 8 of the following subsection discussing the maintenance demonstration.

c. Maintenance Demonstration

The May 2, 2011, final submittal includes a maintenance plan for the Birmingham nonattainment area. The maintenance plan:

(i) Shows compliance with and maintenance of the Annual $PM_{2.5}$ standard by providing information to support the demonstration that current and future emissions of SO_2, NO_X and $PM_{2.5}$ remain at or below 2009 emissions levels.

(ii) Uses 2009 as the attainment year and includes future emissions inventory projections for 2012, 2015, 2018, 2021, and 2024.

(iii) Identifies an ''out year'' at least 10 years (and beyond) after the time necessary for EPA to review and approve the maintenance plan. Per 40 CFR part 93, NO_X and $PM_{2.5}$ MVEBs were established for the last year (2024) of the maintenance plan (see section VI below).

(iv) Provides actual and projected emissions inventories, in tpy, for the Birmingham nonattainment area, as shown in Tables 5 through 8 below.

TABLE 5—ACTUAL AND PROJECTED ANNUAL $PM_{2.5}$ EMISSIONS (TPY) FOR THE BIRMINGHAM AREA

Sector	2009	2012	2015	2018	2021	2024
Point	4,095.30	3,558.75	3,755.85	3,971.20	4,186.55	4,416.50
Area	4,507.75	4,445.70	4,515.05	4,588.05	4,664.70	4,737.70

TABLE 5—ACTUAL AND PROJECTED ANNUAL $PM_{2.5}$ EMISSIONS (TPY) FOR THE BIRMINGHAM AREA—Continued

Sector	2009	2012	2015	2018	2021	2024
Nonroad	584.00	543.85	481.80	419.75	383.25	365.00
Mobile	819.80	663.50	507.24	450.06	392.88	335.70
Total	10,006.85	9,211.80	9,259.94	9,429.06	9,627.38	9,854.90

TABLE 6—ACTUAL AND PROJECTED ANNUAL NO_X EMISSIONS (TPY) FOR THE BIRMINGHAM AREA

Sector	2009	2012	2015	2018	2021	2024
Point	35,131.25	35,189.65	35,773.65	36,375.90	37,102.25	37,846.85
Area	4,102.60	4,168.30	4,230.35	4,296.05	4,358.10	4,423.80
Nonroad	9,968.15	8,979.00	7,935.10	7,172.25	7,004.35	7,088.30
Mobile	24,991.13	19,980.14	14,969.14	12,892.21	10,815.28	8,738.39
Total	74,193.13	68,317.09	62,908.24	60,736.41	59,279.98	58,097.34

TABLE 7—ACTUAL AND PROJECTED ANNUAL SO_2 EMISSIONS (TPY) FOR THE BIRMINGHAM AREA

Sector	2009	2012	2015	2018	2021	2024
Point	180,094.65	74,354.15	74,609.65	74,887.05	75,131.97	75,525.80
Area	386.90	397.85	405.15	416.10	423.40	434.35
Nonroad	182.50	73.00	69.35	69.35	69.35	73.00
Mobile	149.08	121.57	94.09	94.62	95.15	95.62
Total	180,813.13	74,946.57	75,178.24	75,467.12	75,719.87	76,128.77

TABLE 8—EMISSION ESTIMATES FOR BIRMINGHAM AREA

Year	$PM_{2.5}$ (tpy)	NO_X (tpy)	SO_2 (tpy)
2009	10,006.85	74,193.13	180,813.13
2012	9,211.80	68,317.09	74,946.57
2015	9,259.94	62,908.24	75,178.24
2018	9,429.06	60,736.41	75,467.12
2021	9,627.38	59,279.98	75,719.87
2024	9,854.90	58,097.34	76,128.77
Difference from 2009 to 2024	−151.95	−16095.79	−104,684.36

Tables 5 through 8 summarize the 2009 and future projected emissions of direct $PM_{2.5}$ and precursors from the counties in the Birmingham Area. In situations where local emissions are the primary contributor to nonattainment, the ambient air quality standard should not be violated in the future as long as emissions from within the nonattainment area remain at or below the baseline with which attainment was achieved. Alabama has projected emissions as described previously and determined that emissions in the Birmingham Area will remain below those in the attainment year inventory for the duration of the maintenance plan.

As discussed in section VI of this proposed rulemaking, a safety margin is the difference between the attainment level of emissions (from all sources) and the projected level of emissions (from all sources) in the maintenance plan. The attainment level of emissions is the level of emissions during one of the years in which the area met the NAAQS. Alabama selected 2009 as the attainment emissions inventory year for the Birmingham Area. Alabama calculated the safety margins in its submittal as 16,095.79 tpy for NOx and 151.95 tpy for $PM_{2.5}$. The State has decided to allocate 7,243.11 tpy of the available NOx safety margin and 106.37 tpy of the available $PM_{2.5}$ safety margin to the 2024 MVEBs for the Birmingham Area. Therefore, the remaining safety margin for NOx will be 8852.68 tpy and the remaining safety margin for $PM_{2.5}$ will be 45.58 tpy. This allocation and the resulting available safety margin for the Birmingham Area are discussed further in section VI of this proposed rulemaking.

d. Monitoring Network

There are currently ten monitors measuring $PM_{2.5}$ in the Birmingham Area. The State of Alabama, through ADEM, has committed to continue operation of the monitors in the Birmingham Area in compliance with 40 CFR part 58 and have thus addressed the requirement for monitoring. EPA approved Alabama's 2010 monitoring plan on October 8, 2010.

e. Verification of Continued Attainment

The State of Alabama, through ADEM, has the legal authority to enforce and implement the requirements of the Birmingham Area 1997 Annual $PM_{2.5}$ maintenance plan. This includes the authority to adopt, implement and enforce any subsequent emissions control contingency measures determined to be necessary to correct future $PM_{2.5}$ attainment problems.

ADEM will track the progress of the maintenance plan by performing future reviews of triennial emissions inventories for the Birmingham Area as required in the Air Emissions Reporting Rule (AERR) and Consolidated Emissions Reporting Rule (CERR). For these periodic inventories, ADEM will

review the assumptions made for the purpose of the maintenance demonstration concerning projected growth of activity levels. If any of these assumptions appear to have changed substantially, then ADEM will re-project emissions for the Birmingham Area.

f. Contingency Measures in the Maintenance Plan

The contingency measures are designed to promptly correct a violation of the NAAQS that occurs after redesignation. Section 175A of the CAA requires that a maintenance plan include such contingency measures as EPA deems necessary to assure that the state will promptly correct a violation of the NAAQS that occurs after redesignation. The maintenance plan should identify the contingency measures to be adopted, a schedule and procedure for adoption and implementation, and a time limit for action by the State. A state should also identify specific indicators to be used to determine when the contingency measures need to be implemented. The maintenance plan must include a requirement that a state will implement all measures with respect to control of the pollutant that were contained in the SIP before redesignation of the area to attainment in accordance with section 175A(d).

In the May 2, 2011, submittal, Alabama affirms that all programs instituted by the State and EPA will remain enforceable and that sources are prohibited from reducing emissions controls following the redesignation of the Area. The contingency plan included in the submittal includes a triggering mechanism to determine when contingency measures are needed and a process of developing and implementing appropriate control measures. The State of Alabama will use actual ambient monitoring data as the triggering event to determine when contingency measures should be implemented.

Alabama has identified a primary trigger as occurring when the Annual $PM_{2.5}$ NAAQS, as described in section II above, are violated. Alabama commits to adopting, within 18 months of a certified violation of the Annual $PM_{2.5}$ NAAQS, one or more of the control measures discussed below. Additionally, Alabama has identified a secondary trigger to occur when the annual average $PM_{2.5}$ concentrations in a year at any individual monitor in the nonattainment area records a reading of 15.0 $\mu g/m^3$ or higher. In such a case, the state will evaluate existing controls measures and determine whether any further emission reduction measures should be implemented. ADEM will consider several factors in its evaluation of the need for additional controls measures in the event of a future year violation of the 1997 Annual $PM_{2.5}$ NAAQS. Depending on the timing of the future year violations, additional local and regional emissions reductions may still be planned. ADEM will evaluate the air quality impacts of those regulatory programs in determining if further reductions are required to ensure continued maintenance of the Annual $PM_{2.5}$ NAAQS in the Birmingham Maintenance Area.

In addition to the triggers indicated above, Alabama will monitor regional emissions through the CERR and AERR and compare them to the projected inventories and the attainment year inventory. If the actual emissions from these inventories are greater than ten percent above the projected emissions presented in the maintenance plan, than ADEM will evaluate whether additional planning or control measures are needed to prevent the Area from violating the NAAQS or to correct a potential violation.

In the event that further reductions are needed to ensure continued maintenance, the list of ''culpable sources'' developed by Alabama in the State's 2009 Birmingham Annual $PM_{2.5}$ Attainment Demonstration SIP, submitted to EPA on March 13, 2009, will be evaluated for additional control of direct $PM_{2.5}$ emissions. Those sources are listed in Chapter 8 of the Attainment Demonstration SIP, which is included in the docket for this proposed rulemaking (EPA–R04–OAR–2011–0316). Chapter 8 contains the detailed contingency measures for the Annual $PM_{2.5}$ SIP and was referenced in the redesignation request and maintenance plan for the Annual $PM_{2.5}$ NAAQS. Also in the event that further reductions are needed, ADEM will consider the possibility of expanding the current voluntary diesel retrofit program currently in place in the Birmingham Area.

Once a primary trigger is initiated, ADEM will commence analysis, including review of expected emissions reductions from local and regional regulatory programs, air quality modeling, and emissions inventory assessment to determine emission control measures that will be required to attain or maintain the 1997 Annual $PM_{2.5}$ NAAQS. All controls relied upon for contingency purposes are scheduled to be installed in 2012 or later and are therefore not already relied upon for maintenance. At least one of the following contingency measures will be adopted and implemented upon a primary triggering event:

- Continued implementation of previously adopted controls which have not yet been realized but are sufficient to address the violation, including future year emission reductions from Federal measures to address interstate pollutant transport and from the Georgia multi-pollutant rule;
- Additional controls of direct $PM_{2.5}$ emissions from the list of ''culpable sources'' developed in the Annual $PM_{2.5}$ attainment SIP;
- Expansion of the current voluntary diesel retrofit program in the Birmingham Area;
- Any additional controls deemed beneficial to address the violation at the time of the trigger.

The schedule for implementation of this plan and details of steps ADEM will take to bring the area back into compliance are outlined in Table 9 below.

TABLE 9—SCHEDULE FOR PERMIT REVISIONS AND/OR RULE REVISIONS FOR IMPLEMENTING CONTINGENCY MEASURES

Step	Description of action	Schedule
1	Identify and quantify the emissions reductions expected to result from current and future state and Federal regulatory programs.	3 months.
2	Use the best available air quality modeling to evaluate the air quality improvement expected from step 1 above.	6 months.
3	Draft any needed permit conditions or SIP regulations	3 months.
4	Complete rulemaking or permit revision process and submit to EPA	6 months.
	Maximum time required for completion	18 months.

EPA has concluded that the maintenance plan adequately addresses the five basic components of a maintenance plan: attainment inventory, monitoring network, verification of continued attainment, and a contingency plan. Therefore, the maintenance plan SIP revision submitted by the State of Alabama for the Birmingham Area meets the requirements of section 175A of the CAA and is approvable.

VI. What is EPA's analysis of Alabama's proposed NO_X and $PM_{2.5}$ MVEBs for the Birmingham area?

Under section 176(c) of the CAA, new transportation plans, programs, and projects, such as the construction of new highways, must ''conform'' to (*i.e.,* be consistent with) the part of the state's air quality plan that addresses pollution from cars and trucks. Conformity to the SIP means that transportation activities will not cause new air quality violations, worsen existing violations, or delay timely attainment of the NAAQS or any interim milestones. If a transportation plan does not conform, most new projects that would expand the capacity of roadways cannot go forward. Regulations at 40 CFR part 93 set forth EPA policy, criteria, and procedures for demonstrating and assuring conformity of such transportation activities to a SIP. The regional emissions analysis is one, but not the only, requirement for implementing transportation conformity. Transportation conformity is a requirement for nonattainment and maintenance areas. Maintenance areas are areas that were previously nonattainment for a particular NAAQS but have since been redesignated to attainment with an approved maintenance plan for that NAAQS.

Under the CAA, states are required to submit, at various times, control strategy SIPs and maintenance plans for nonattainment areas. These control strategy SIPs (including RFP and attainment demonstration) and maintenance plans create MVEBs for criteria pollutants and/or their precursors to address pollution from cars and trucks. Per 40 CFR part 93, a MVEB must be established for the last year of the maintenance plan. A state may adopt MVEBs for other years as well. The MVEB is the portion of the total allowable emissions in the maintenance demonstration that is allocated to highway and transit vehicle use and emissions. *See* 40 CFR 93.101. The MVEB serves as a ceiling on emissions from an area's planned transportation system. The MVEB concept is further explained in the preamble to the November 24, 1993, Transportation Conformity Rule (58 FR 62188). The preamble also describes how to establish the MVEB in the SIP and how to revise the MVEB.

After interagency consultation with the transportation partners for the Birmingham Area, Alabama has elected to develop MVEBs for NO_X and $PM_{2.5}$ for the entire nonattainment area (Jefferson, Shelby, and the nonattainment portion of Walker Counties). Alabama is developing these MVEBs, as required, for the last year of its maintenance plan, 2024. The MVEBs reflect the total on-road emissions for 2024, plus an allocation from the available NO_X and $PM_{2.5}$ safety margin. Under 40 CFR 93.101, the term ''safety margin'' is the difference between the attainment level (from all sources) and the projected level of emissions (from all sources) in the maintenance plan. The safety margin can be allocated to the transportation sector; however, the total emissions must remain below the attainment level. The NO_X and $PM_{2.5}$ MVEBs and allocation from the safety margin were developed in consultation with the transportation partners and were added to account for uncertainties in population growth, changes in model vehicle miles traveled and new emission factor models. The NO_X and $PM_{2.5}$ MVEBs for the Birmingham Area are defined in Table 10 below.

TABLE 10—BIRMINGHAM AREA $PM_{2.5}$ NO_X MVEBS

[tpy]

	$PM_{2.5}$	NO_X
2024 On-road Mobile Emissions (tpy)	335.7	8,738.39
Safety Margin Allocated to MVEB	106.37	7,243.11
2024 Conformity MVEB	442.07	15,981.50

As mentioned above, the Birmingham Area has chosen to allocate a portion of the available safety margin to the NO_X and $PM_{2.5}$ MVEBs for 2024. This allocation is 7,243.11 tpy and 106.37 tpy for NO_X and $PM_{2.5}$, respectively. Thus, the remaining safety margins for 2024 are 8,852.68 tpy and 45.58 tpy for NO_X and $PM_{2.5}$, respectively.

Through this rulemaking, EPA is proposing to approve the MVEBs for NO_X and $PM_{2.5}$ for 2024 for the Birmingham Area because EPA has determined that the Area maintains the 1997 Annual $PM_{2.5}$ NAAQS with the emissions at the levels of the budgets. Once the MVEBs for the Birmingham Area are approved or found adequate (whichever is completed first), they must be used for future conformity determinations. After thorough review, EPA has determined that the budgets meet the adequacy criteria, as outlined in 40 CFR 93.118(e)(4), and is proposing to approve the budgets because they are consistent with maintenance of the 1997 Annual $PM_{2.5}$ NAAQS through 2024.

VII. What is the status of EPA's adequacy determination for the proposed NO_X and $PM_{2.5}$ MVEBs for 2024 for the Birmingham Area?

When reviewing submitted ''control strategy'' SIPs or maintenance plans containing MVEBs, EPA may affirmatively find the MVEB contained therein adequate for use in determining transportation conformity. Once EPA affirmatively finds the submitted MVEB is adequate for transportation conformity purposes, that MVEB must be used by state and Federal agencies in determining whether proposed transportation projects conform to the SIP as required by section 176(c) of the CAA.

EPA's substantive criteria for determining adequacy of a MVEB are set out in 40 CFR 93.118(e)(4). The process for determining adequacy consists of three basic steps: Public notification of a SIP submission, a public comment period, and EPA's adequacy determination. This process for determining the adequacy of submitted MVEBs for transportation conformity purposes was initially outlined in EPA's May 14, 1999, guidance, ''Conformity Guidance on Implementation of March 2, 1999, Conformity Court Decision.'' EPA adopted regulations to codify the adequacy process in the Transportation Conformity Rule Amendments for the ''New 8-Hour Ozone and $PM_{2.5}$ National Ambient Air Quality Standards and Miscellaneous Revisions for Existing Areas; Transportation Conformity Rule Amendments—Response to Court Decision and Additional Rule Change,'' on July 1, 2004 (69 FR 40004). Additional information on the adequacy process for transportation conformity purposes is available in the proposed rule entitled, ''Transportation Conformity Rule Amendments: Response to Court Decision and Additional Rule Changes,'' 68 FR 38974, 38984 (June 30, 2003).

As discussed earlier, Alabama's maintenance plan submission includes NO_X and $PM_{2.5}$ MVEBs for the Birmingham Area for 2024, the last year of the maintenance plan. EPA reviewed the NO_X and $PM_{2.5}$ MVEBs through the adequacy process. The Alabama SIP submission, including the Birmingham

Area NO_X and $PM_{2.5}$ MVEBs, was open for public comment on EPA's adequacy Web site on March 24, 2011, found at: *http://www.epa.gov/otaq/stateresources/transconf/currsips.htm.* The EPA public comment period on adequacy for the MVEBs for 2024 for Birmingham Area closed on April 25, 2011. EPA did not receive any comments on the adequacy of the MVEBs, nor did EPA receive any requests for the SIP submittal.

EPA intends to make its determination on the adequacy of the 2024 MVEBs for the Birmingham Area for transportation conformity purposes in the near future by completing the adequacy process that was started on March 24, 2011. After EPA finds the 2024 MVEBs adequate or approves them, the new MVEBs for NO_X and $PM_{2.5}$ must be used for future transportation conformity determinations. For required regional emissions analysis years that involve 2024 or beyond, the applicable budgets will be the new 2024 MVEBs established in the maintenance plan, as defined in section VI of this proposed rulemaking.

VIII. What is EPA's analysis of the proposed 2009 base year emissions inventory for the Birmingham area?

As discussed above, section 172(c)(3) of the CAA requires areas to submit a base year emissions inventory. As part of Alabama's request to redesignate the Birmingham Area, the State submitted a 2009 base year emissions inventory to meet this requirement. Emissions contained in the submittal cover the general source categories of point sources, area sources, on-road mobile sources, and non-road mobile sources. All emission summaries were accompanied by source-specific descriptions of emission calculation procedures and sources of input data. Alabama's submittal documents 2009 emissions in the Birmingham Area in units of tpy. Table 11, below, provides a summary of the 2009 emissions of direct $PM_{2.5}$, NO_X, and SO_2 for the Birmingham Area. In today's notice, EPA is proposing to approve this 2009 base year inventory as meeting the section 172(c)(3) emissions inventory requirement.

TABLE 11—BIRMINGHAM AREA 2009 EMISSIONS FOR $PM_{2.5}$, NO_X, AND SO_2

[tpy (percent total)]

Source	$PM_{2.5}$	NO_X	SO_2
Point Source Total	4,095.30 [40.9]	35,131.25 [47.4]	180,094.65 [99.6]
Area Source Total	4,507.75 [45.0]	4,102.60 [5.5]	386.90 [0.2]
On-Road Mobile Source Total	819.80 [8.2]	24,991.13 [33.7]	149.08 [0.1]
Non-Road Mobile Source Total	584.00 [5.8]	9,968.15 [13.4]	182.50 [0.1]
Total for all Sources	10,006.85	74,193.13	180,813.13

IX. What is the effect of EPA's proposed actions?

EPA's proposed actions establish the basis upon which EPA may take final action on the issues being proposed for approval today. Approval of Alabama's redesignation request would change the legal designation of Jefferson and Shelby Counties and the designated portion of Walker County in Alabama for the 1997 Annual $PM_{2.5}$ NAAQS, found at 40 CFR part 81, from nonattainment to attainment. Approval of Alabama's request would also incorporate a plan for maintaining the 1997 Annual $PM_{2.5}$ NAAQS in the Birmingham Area through 2024 into the Alabama SIP. This maintenance plan includes contingency measures to remedy any future violations of the 1997 Annual $PM_{2.5}$ NAAQS and procedures for evaluation of potential violations. The maintenance plan also establishes NO_X and $PM_{2.5}$ MVEBs for the Birmingham Area. The NO_X and $PM_{2.5}$ MVEBs for 2024 for the Birmingham Area are 15,981.50 tpy and 442.07 tpy, respectively. Final action would also approve the Area's emissions inventory under section 172(c)(3). Additionally, EPA is notifying the public of the status of EPA's adequacy determination for the newly-established $PM_{2.5}$ and NO_X MVEBs for 2024 for the Birmingham Area.

X. Proposed Actions on the Redesignation Request and Maintenance Plan SIP Revisions Including Approval of the NO_X and $PM_{2.5}$ MVEBs for 2024 for the Birmingham Area

EPA previously determined that the Birmingham Area was attaining the 1997 Annual $PM_{2.5}$ NAAQS on June 29, 2011, at 76 FR 38023. EPA is now taking three separate but related actions regarding the Area's redesignation and maintenance of the 1997 Annual $PM_{2.5}$ NAAQS.

First, EPA is proposing to determine, based on complete, quality-assured and certified monitoring data for the 2008–2010 monitoring period, and after review of preliminary data in AQS for 2011, that the Birmingham Area continues to attain the 1997 Annual $PM_{2.5}$ NAAQS. EPA is proposing to determine that the Birmingham Area has met the criteria under CAA section 107(d)(3)(E) for redesignation from nonattainment to attainment for the 1997 Annual $PM_{2.5}$ NAAQS. On this basis, EPA is proposing to approve Alabama's redesignation request for the Birmingham Area.

Second, EPA is proposing to approve Alabama's 2009 emissions inventory for the Birmingham Area (under CAA section 172(c)(3)). Alabama selected 2009 as the attainment emissions inventory year for the Birmingham Area. This attainment inventory identifies a level of emissions in the Area that is sufficient to attain the 1997 Annual $PM_{2.5}$ NAAQS and also is a current, comprehensive inventory that meets the requirements of section 172(c)(3).

Third, EPA is proposing to approve the maintenance plan for the Birmingham Area, including the $PM_{2.5}$ and NO_X MVEBs for 2024, into the Alabama SIP (under CAA section 175A). The maintenance plan demonstrates that the Area will continue to maintain the 1997 Annual $PM_{2.5}$ NAAQS, and the budgets meet all of the adequacy criteria contained in 40 CFR 93.118(e)(4) and (5). Further, as part of today's action, EPA is describing the status of its adequacy determination for the $PM_{2.5}$ and NO_X MVEBs for 2024 in accordance with 40 CFR 93.118(f)(1). Within 24 months from the effective date of EPA's adequacy determination for the MVEBs or the effective date for the final rule for this action, whichever is earlier, the transportation partners will need to demonstrate conformity to the new NO_X and $PM_{2.5}$ MVEBs pursuant to 40 CFR 93.104(e).

If finalized, approval of the redesignation request would change the official designation of Jefferson and Shelby Counties in their entireties and the nonattainment portion of Walker

County in the Birmingham Area for the 1997 Annual $PM_{2.5}$ NAAQS, found at 40 CFR part 81, from nonattainment to attainment.

XI. Statutory and Executive Order Reviews

Under the CAA, redesignation of an area to attainment and the accompanying approval of a maintenance plan under section 107(d)(3)(E) are actions that affect the status of a geographical area and do not impose any additional regulatory requirements on sources beyond those imposed by state law. A redesignation to attainment does not in and of itself create any new requirements, but rather results in the applicability of requirements contained in the CAA for areas that have been redesignated to attainment. Moreover, the Administrator is required to approve a SIP submission that complies with the provisions of the Act and applicable Federal regulations. 42 U.S.C. 7410(k); 40 CFR 52.02(a). Thus, in reviewing SIP submissions, EPA's role is to approve state choices, provided that they meet the criteria of the CAA. Accordingly, this proposed action merely approves state law as meeting Federal requirements and does not impose additional requirements beyond those imposed by state law. For this reason, these proposed actions:

- Are not ''significant regulatory action[s]'' subject to review by the Office of Management and Budget under Executive Order 12866 (58 FR 51735, October 4, 1993);
- Do not impose an information collection burden under the provisions of the Paperwork Reduction Act (44 U.S.C. 3501 *et seq.*);
- Are certified as not having a significant economic impact on a substantial number of small entities under the Regulatory Flexibility Act (5 U.S.C. 601 *et seq.*);
- Do not contain any unfunded mandate or significantly or uniquely affect small governments, as described in the Unfunded Mandates Reform Act of 1995 (Pub. L. 104–4);
- Do not have Federalism implications as specified in Executive Order 13132 (64 FR 43255, August 10, 1999);
- Are not economically significant regulatory actions based on health or safety risks subject to Executive Order 13045 (62 FR 19885, April 23, 1997);
- Are not significant regulatory actions subject to Executive Order 13211 (66 FR 28355, May 22, 2001);
- Are not subject to requirements of Section 12(d) of the National Technology Transfer and Advancement Act of 1995 (15 U.S.C. 272 note) because application of those requirements would be inconsistent with the CAA; and
- Do not provide EPA with the discretionary authority to address, as appropriate, disproportionate human health or environmental effects, using practicable and legally permissible methods, under Executive Order 12898 (59 FR 7629, February 16, 1994).

In addition, this proposed rule does not have Tribal implications as specified by Executive Order 13175 (65 FR 67249, November 9, 2000), because the SIP is not approved to apply in Indian country located in the State, and EPA notes that it will not impose substantial direct costs on Tribal governments or preempt Tribal law.

List of Subjects

40 CFR Part 52

Environmental protection, Air pollution control, Intergovernmental relations, Reporting and recordkeeping requirements, and Particulate matter.

40 CFR Part 81

Environmental protection, Air pollution control.

Authority: 42 U.S.C. 7401 *et seq.*

Dated: November 2, 2011.

Gwendolyn Keyes Fleming,

Regional Administrator, Region 4.

[FR Doc. 2011–29176 Filed 11–9–11; 8:45 am]

BILLING CODE 6560–50–P

ENVIRONMENTAL PROTECTION AGENCY

40 CFR Parts 52 and 81

[EPA–R04–OAR–2011–0043–201110; FRL–9490–6]

Approval and Promulgation of Implementation Plans and Designation of Areas for Air Quality Planning Purposes; Alabama; Redesignation of the Birmingham 2006 24-Hour Fine Particulate Matter Nonattainment Area to Attainment

AGENCY: Environmental Protection Agency (EPA).

ACTION: Proposed rule.

SUMMARY: On June 17, 2010, the State of Alabama, through the Alabama Department of Environmental Management (ADEM), Air Division, submitted a request for EPA to redesignate the Birmingham fine particulate matter ($PM_{2.5}$) nonattainment area (hereafter referred to as the ''Birmingham Area'' or ''Area'') to attainment for the 2006 24-hour $PM_{2.5}$ National Ambient Air Quality Standards (NAAQS); and to approve a State Implementation Plan (SIP) revision containing a maintenance plan for the Area. The Birmingham 2006 24-hour $PM_{2.5}$ nonattainment area is comprised of Jefferson and Shelby Counties in their entireties and a portion of Walker County. EPA is proposing to approve the redesignation request for the Birmingham Area, along with the related SIP revision, including Alabama's 2009 emissions inventory for the Area and Alabama's plan for maintaining attainment of the $PM_{2.5}$ standard in the Area. EPA is also proposing to approve the motor vehicle emission budgets (MVEBs) for nitrogen oxides (NO_X) and $PM_{2.5}$ for the year 2024 for the Birmingham Area. These actions are being proposed pursuant to the Clean Air Act (CAA or Act) and its implementing regulations.

DATES: Comments must be received on or before December 12, 2011.

ADDRESSES: Submit your comments, identified by Docket ID No. EPA–R04–OAR–2011–0043, by one of the following methods:

1. *http://www.regulations.gov:* Follow the on-line instructions for submitting comments.
2. *Email: benjamin.lynorae@epa.gov.*
3. *Fax:* (404) 562–9019.
4. *Mail:* EPA–R04–OAR–2011–0043, Regulatory Development Section, Air Planning Branch, Air, Pesticides and Toxics Management Division, U.S. Environmental Protection Agency, Region 4, 61 Forsyth Street SW., Atlanta, Georgia 30303–8960.
5. *Hand Delivery or Courier:* Ms. Lynorae Benjamin, Chief, Regulatory Development Section, Air Planning Branch, Air, Pesticides and Toxics Management Division, U.S. Environmental Protection Agency, Region 4, 61 Forsyth Street SW., Atlanta, Georgia 30303–8960. Such deliveries are only accepted during the Regional Office's normal hours of operation. The Regional Office's official hours of business are Monday through Friday, 8:30 to 4:30, excluding Federal holidays.

Instructions: Direct your comments to Docket ID No. EPA–R04–OAR–2011–0043. EPA's policy is that all comments received will be included in the public docket without change and may be made available online at *www.regulations.gov,* including any personal information provided, unless the comment includes information claimed to be Confidential Business Information (CBI) or other information whose disclosure is restricted by statute. Do not submit through *www.regulations.gov* or email, information that you consider to be CBI

or otherwise protected. The *www.regulations.gov* Web site is an ''anonymous access'' system, which means EPA will not know your identity or contact information unless you provide it in the body of your comment. If you send an email comment directly to EPA without going through *www.regulations.gov,* your email address will be automatically captured and included as part of the comment that is placed in the public docket and made available on the Internet. If you submit an electronic comment, EPA recommends that you include your name and other contact information in the body of your comment and with any disk or CD–ROM you submit. If EPA cannot read your comment due to technical difficulties and cannot contact you for clarification, EPA may not be able to consider your comment. Electronic files should avoid the use of special characters, any form of encryption, and be free of any defects or viruses. For additional information about EPA's public docket visit the EPA Docket Center homepage at *http://www.epa.gov/epahome/dockets.htm.*

Docket: All documents in the electronic docket are listed in the *www.regulations.gov* index. Although listed in the index, some information is not publicly available, *i.e.,* CBI or other information whose disclosure is restricted by statute. Certain other material, such as copyrighted material, is not placed on the Internet and will be publicly available only in hard copy form. Publicly available docket materials are available either electronically in *www.regulations.gov* or in hard copy at the Regulatory Development Section, Air Planning Branch, Air, Pesticides and Toxics Management Division, U.S. Environmental Protection Agency, Region 4, 61 Forsyth Street SW., Atlanta, Georgia 30303–8960. EPA requests that if at all possible, you contact the person listed in the **FOR FURTHER INFORMATION CONTACT** section to schedule your inspection. The Regional Office's official hours of business are Monday through Friday, 8:30 to 4:30, excluding Federal holidays.

FOR FURTHER INFORMATION CONTACT: Joel Huey of the Regulatory Development Section, in the Air Planning Branch, Air, Pesticides and Toxics Management Division, U.S. Environmental Protection Agency, Region 4, 61 Forsyth Street SW., Atlanta, Georgia 30303–8960. Joel Huey may be reached by phone at (404) 562–9104, or via electronic mail at *huey.joel@epa.gov*.

SUPPLEMENTARY INFORMATION:

Table of Contents

I. What are the actions EPA is proposing to take?
II. What is the background for EPA's proposed actions?
III. What are the criteria for redesignation?
IV. Why is EPA proposing these actions?
V. What is EPA's analysis of the request?
VI. What is EPA's analysis of Alabama's proposed NO_X and $PM_{2.5}$ MVEBs for the Birmingham Area?
VII. What is the status of EPA's adequacy determination for the proposed NO_X and $PM_{2.5}$ MVEBs for 2024 for the Birmingham area?
VIII. What is EPA's analysis of the proposed 2009 base year emissions inventory for the Birmingham area?
IX. Proposed Action on the Redesignation Request and Maintenance Plan SIP Revision Including Proposed Approval of the 2024 NO_X and $PM_{2.5}$ MVEBs for the Birmingham Area
X. What is the effect of EPA's proposed actions?
XI. Statutory and Executive Order Reviews

I. What are the actions EPA is proposing to take?

EPA is proposing to take the following three separate but related actions, some of which involve multiple elements: (1) To redesignate the Birmingham Area to attainment for the 2006 24-hour $PM_{2.5}$ NAAQS, provided EPA approves the emissions inventory submitted with the maintenance plan; (2) to approve, under CAA section 172(c)(3), the emissions inventory submitted with the maintenance plan; and (3) to approve into the Alabama SIP, under section 175A of the CAA, Alabama's 2006 24-hour $PM_{2.5}$ NAAQS maintenance plan, including the associated MVEBs (EPA is also notifying the public of the status of EPA's adequacy determination for the Birmingham Area MVEBs for the $PM_{2.5}$ NAAQS). These actions are summarized below and described in greater detail throughout this notice of proposed rulemaking.

First, EPA proposes to determine that, if EPA finalizes approval of the 2009 baseline emissions inventory for the Birmingham Area, the Area has met the requirements for redesignation under section 107(d)(3)(E) of the CAA. In this action, EPA is proposing to approve a request to change the legal designation of Jefferson and Shelby Counties in their entireties and the designated portion of Walker County in the Birmingham Area from nonattainment to attainment for the 2006 24-hour $PM_{2.5}$ NAAQS. As discussed below, the emissions inventory is being proposed for approval today.

Second, EPA is proposing to approve Alabama's 2009 emissions inventory for the Birmingham Area (under CAA section 172(c)(3)). Alabama selected 2009 as the attainment emissions inventory year for the Birmingham Area. This attainment inventory identifies a level of emissions in the Area that is sufficient to attain the 2006 24-hour $PM_{2.5}$ NAAQS and is a current, comprehensive inventory that meets the requirements of section 172(c)(3).

Third, EPA is proposing to approve Alabama's 2006 24-hour $PM_{2.5}$ NAAQS maintenance plan for the Birmingham Area as meeting the requirements of section 175A (such approval being one of the CAA criteria for redesignation to attainment status). The recently promulgated Cross State Air Pollution Rule (CSAPR),[1] requires reductions of NO_X and SO_2 associated with power plants to be permanent and enforceable. The maintenance plan is designed to help keep the Birmingham Area in attainment of the 2006 24-hour $PM_{2.5}$ NAAQS through 2024. Consistent with the CAA, the maintenance plan that EPA is proposing to approve today also includes NO_X and $PM_{2.5}$ MVEBs for the year 2024 for the Birmingham Area. EPA is proposing to approve (into the Alabama SIP) the 2024 MVEBs that are included as part of Alabama's maintenance plan for the 2006 24-hour $PM_{2.5}$ NAAQS.

On a matter related matter to this third action, EPA is also notifying the public of the status of EPA's adequacy process for the newly-established NO_X and $PM_{2.5}$ MVEBs for 2024 for the Birmingham Area. ADEM submitted MVEBs for NO_X and $PM_{2.5}$ in its original June 17, 2010, redesignation request. On May 2, 2011, ADEM submitted additional revisions to the MVEBs for the 24-hour redesignation request.[2] The adequacy comment period for the new Birmingham Area 2024 MVEBs began on March 24, 2011, with EPA's posting of the availability of this submittal on EPA's Adequacy Web site (*http://www.epa.gov/otaq/stateresources/transconf/currsips.htm*). The adequacy comment period for these MVEBs closed on April 25, 2011. No adverse comments were received during the adequacy public comment period. Please see section VII of this proposed rulemaking for further explanation of

[1] *See* ''Federal Implementation Plans to Reduce Interstate Transport of Fine Particulate Matter and Ozone in 27 States; Correction of SIP Approvals for 22 States'' (76 FR 48208, August 8, 2011).

[2] On March 2, 2011, ADEM submitted a proposed revision to the 24-hour NO_X and $PM_{2.5}$ MVEBs originally submitted on June 17, 2010. The final MVEBs were submitted on May 2, 2011, with ADEM's 1997 Annual $PM_{2.5}$ NAAQS redesignation submittal. A copy of the submittal is included in the docket for this proposed rulemaking (EPA–R04–OAR–2011–0043) and can be obtained from the *www.regulations.gov* Web site.

this process and for more details on the MVEBs.

Today's notice of proposed rulemaking is in response to Alabama's June 17, 2010, SIP submittal and subsequent supplement of May 2, 2011. Those documents addresses the specific issues summarized above and the necessary elements described in section 107(d)(3)(E) of the CAA for redesignation of the Birmingham Area to attainment of the 2006 24-hour $PM_{2.5}$ NAAQS.

II. What is the background for EPA's proposed actions?

Fine particle pollution can be emitted directly or formed secondarily in the atmosphere. The main precursors of $PM_{2.5}$ are sulfur dioxide (SO_2), NO_X, ammonia and volatile organic compounds (VOC). Unless otherwise noted by the State or EPA, ammonia and VOCs are presumed to be insignificant contributors to $PM_{2.5}$ formation, whereas SO_2 and NO_X are presumed to be significant contributors to $PM_{2.5}$ formation. Sulfates are a type of secondary particle formed from SO_2 emissions of power plants and industrial facilities. Nitrates, another common type of secondary particle, are formed from NO_X emissions of power plants, automobiles, and other combustion sources.

On July 18, 1997, EPA promulgated the first air quality standards for $PM_{2.5}$. EPA promulgated an annual standard at a level of 15 micrograms per cubic meter (μg/m³), based on a 3-year average of annual mean $PM_{2.5}$ concentrations. In the same rulemaking, EPA promulgated a 24-hour standard of 65 μg/m³, based on a 3-year average of the 98th percentile of 24-hour concentrations. On October 17, 2006, at 71 FR 61144, EPA retained the annual average NAAQS at 15 μg/m³ but revised the 24-hour NAAQS to 35 μg/m³, based again on the 3-year average of the 98th percentile of 24-hour concentrations.[3] Under EPA regulations at 40 CFR part 50, the primary and secondary 2006 24-hour $PM_{2.5}$ NAAQS are attained when the annual arithmetic mean concentration, as determined in accordance with 40 CFR part 50, Appendix N, is less than or equal to 35 μg/m³ at all relevant monitoring sites in the subject area over a 3-year period.

On January 5, 2005, at 70 FR 944, and supplemented on April 14, 2005, at 70 FR 19844, EPA designated the Birmingham Area as nonattainment for the 1997 $PM_{2.5}$ NAAQS based upon air quality data for calendar years 2001–2003. In that action, EPA defined the 1997 $PM_{2.5}$ Birmingham nonattainment area to include Jefferson and Shelby Counties in their entireties and a portion Walker County. On November 13, 2009, at 74 FR 58688, EPA promulgated designations for the 2006 $PM_{2.5}$ NAAQS, designating the Birmingham Area (with the same boundaries as for the 1997 $PM_{2.5}$ nonattainment area) as nonattainment for the 2006 24-hour $PM_{2.5}$ NAAQS based upon air quality data for calendar years 2006–2008. That action also clarified that the Birmingham Area was classified unclassifiable/attainment for the 1997 24-hour $PM_{2.5}$ NAAQS. EPA did not promulgate designations for the annual average NAAQS promulgated in 2006 since that NAAQS was essentially identical to the 1997 annual $PM_{2.5}$ NAAQS. Therefore, the Birmingham Area is designated nonattainment for the annual NAAQS promulgated in 1997 and for the 24-hour NAAQS promulgated in 2006. Today's action only addresses the designation for the 24-hour NAAQS promulgated in 2006.

All 2006 $PM_{2.5}$ NAAQS areas were designated under subpart 1 of title I, part D, of the CAA. Subpart 1 contains the general requirements for nonattainment areas for any pollutant governed by a NAAQS and is less prescriptive than the other subparts of title I, part D. On April 25, 2007 (72 FR 20664), EPA promulgated its $PM_{2.5}$ implementation rule, codified at 40 CFR part 51, subpart Z, in which the Agency provided guidance for state and Tribal plans to implement the $PM_{2.5}$ NAAQS. This rule, at 40 CFR 51.1004(c), specifies some of the regulatory impacts of attaining the NAAQS, as discussed below.

On May 12, 2005, EPA published the Clean Air Interstate Rule (CAIR), which addressed the interstate transport requirements of the CAA and required states to significantly reduce SO_2 and NO_X emissions from power plants (70 FR 25162). The associated Federal Implementation Plans (FIPs) were published on April 28, 2006 (71 FR 25328). However, on July 11, 2008, the DC Circuit Court issued its decision to vacate and remand both CAIR and the associated CAIR FIPs in their entirety (*North Carolina* v. *EPA,* 531 F.3d 836 (DC Cir., 2008)). EPA petitioned for rehearing, and the Court issued an order remanding CAIR to EPA without vacating either CAIR or the CAIR FIPs (*North Carolina* v. *EPA,* 550 F.3d 1176 (DC Cir., 2008)). The Court left CAIR in place to ''temporarily preserve the environmental values covered by CAIR'' until EPA replaces it with a rule consistent with the Court's opinion. *Id.* at 1178. The Court directed EPA to ''remedy CAIR's flaws'' consistent with its July 11, 2008, opinion but declined to impose a schedule on EPA for completing that action. *Id.* As a result of these court rulings, the power plant emission reductions that resulted solely from the development, promulgation, and implementation of CAIR, and the associated contribution to air quality improvement that occurred solely as a result of CAIR in the Birmingham Area could not be considered to be permanent.

On August 8, 2011, EPA published CSAPR in the **Federal Register** under the title, ''Federal Implementation Plans to Reduce Interstate Transport of Fine Particulate Matter and Ozone in 27 States; Correction of SIP Approvals for 22 States'' (76 FR 48208, August 8, 2011) to address interstate transport of emissions and resulting secondary air pollutants and to replace CAIR. The CAIR emission reduction requirements limit emissions in Alabama and states upwind of Alabama through 2011, and CSAPR requires similar or greater reductions in the relevant areas in 2012 and beyond. The emission reductions that CSAPR mandates may be considered to be permanent and enforceable. In turn, the air quality improvement in the Birmingham Area that has resulted from electric generating units (EGUs) emission reductions associated with CAIR (as well as the additional air quality improvement that would be expected to result from full implementation of CSAPR) may also be considered to be permanent and enforceable. EPA proposes that the requirement in section 107(d)(3)(E)(iii) has now been met because the emission reduction requirements of CAIR address emissions through 2011 and EPA has now promulgated CSAPR which requires similar or greater reductions in the relevant areas in 2012 and beyond. Because the emission reduction requirements of CAIR are enforceable through the 2011 control period, and because CSAPR has now been promulgated to address the requirements previously addressed by CAIR and gets similar or greater reductions in the relevant areas in 2012 and beyond, EPA is proposing to determine that the pollutant transport

[3] In response to legal challenges of the annual standard promulgated in 2006, the United States Court of Appeals for the District of Columbia Circuit (DC Circuit) remanded this NAAQS to EPA for further consideration. *See American Farm Bureau Federation and National Pork Producers Council, et al.* v. *EPA,* 559 F.3d 512 (DC Circuit 2009). However, given that the 1997 and 2006 annual NAAQS are essentially identical, attainment of the 1997 Annual NAAQS would also indicate attainment of the remanded 2006 Annual NAAQS.

part of the reductions that led to attainment in the Birmingham Area can now be considered permanent and enforceable. Therefore, EPA proposes to find that the transport requirement of CAA section 107(d)(3)(E)(iii) has been met for the Birmingham Area.

The 3-year ambient air quality data for 2007–2009 indicated no violations of the 2006 $PM_{2.5}$ NAAQS for the Birmingham Area. As a result, on June 17, 2010, Alabama requested redesignation of the Birmingham Area to attainment for the 2006 24-hour $PM_{2.5}$ NAAQS. The redesignation request included three years of complete, quality-assured ambient air quality data for the 2006 24-hour $PM_{2.5}$ NAAQS for 2007–2009, indicating that the 2006 24-hour $PM_{2.5}$ NAAQS had been achieved for the Birmingham Area. Under the CAA, nonattainment areas may be redesignated to attainment if sufficient, complete, quality-assured data is available for the Administrator to determine that the area has attained the standard and the area meets the other CAA redesignation requirements in section 107(d)(3)(E). From 2007 through the present, the 24-hour $PM_{2.5}$ design values for the Birmingham Area have declined. While 24-hour $PM_{2.5}$ concentrations are dependent on a variety of conditions, the overall downtrend in $PM_{2.5}$ concentrations in the Birmingham Area can be attributed to the reduction of emissions, as will be discussed in more detail in section V of this proposed rulemaking.

III. What are the criteria for redesignation?

The CAA provides the requirements for redesignating a nonattainment area to attainment. Specifically, section 107(d)(3)(E) of the CAA allows for redesignation providing the following criteria are met: (1) The Administrator determines that the area has attained the applicable NAAQS; (2) the Administrator has fully approved the applicable implementation plan for the area under section 110(k); (3) the Administrator determines that the improvement in air quality is due to permanent and enforceable reductions in emissions resulting from implementation of the applicable SIP and applicable Federal air pollutant control regulations and other permanent and enforceable reductions; (4) the Administrator has fully approved a maintenance plan for the area as meeting the requirements of section 175A; and (5) the state containing such area has met all requirements applicable to the area under section 110 and part D of title I of the CAA.

EPA has provided guidance on redesignation in the General Preamble for the Implementation of title I of the CAA Amendments of 1990 (April 16, 1992, 57 FR 13498, and supplemented on April 28, 1992, 57 FR 18070) and has provided further guidance on processing redesignation requests in the following documents:

1. ''Procedures for Processing Requests to Redesignate Areas to Attainment,'' Memorandum from John Calcagni, Director, Air Quality Management Division, September 4, 1992 (hereafter referred to as the ''Calcagni Memorandum'');
2. ''State Implementation Plan (SIP) Actions Submitted in Response to Clean Air Act (CAA) Deadlines,'' Memorandum from John Calcagni, Director, Air Quality Management Division, October 28, 1992; and
3. ''Part D New Source Review (Part D NSR) Requirements for Areas Requesting Redesignation to Attainment,'' Memorandum from Mary D. Nichols, Assistant Administrator for Air and Radiation, October 14, 1994.

IV. Why is EPA proposing these actions?

On June 17, 2010, the State of Alabama, through ADEM, requested the redesignation of the Birmingham Area to attainment for the 2006 24-hour $PM_{2.5}$ NAAQS. EPA's evaluation indicates that the Birmingham Area has attained the 2006 24-hour $PM_{2.5}$ NAAQS and meets the requirements for redesignation set forth in section 107(d)(3)(E), including the maintenance plan requirements under section 175A of the CAA. As a result, EPA is proposing to take the three related actions summarized in section I of this notice.

V. What is EPA's analysis of the request?

As stated above, in accordance with the CAA, EPA proposes in today's action to: (1) Redesignate the Birmingham Area to attainment for the 2006 24-hour $PM_{2.5}$ NAAQS; (2) approve the Birmingham Area emissions inventory submitted with the maintenance plan; and (3) approve into the Alabama SIP Birmingham's 2006 24-hour $PM_{2.5}$ NAAQS maintenance plan, including the associated MVEBs. These actions are based upon EPA's determination that the Birmingham Area continues to attain the 2006 24-hour $PM_{2.5}$ NAAQS and that all other redesignation criteria have been met for the Birmingham Area, provided EPA approves the emissions inventory submitted with the maintenance plan. The five redesignation criteria provided under CAA section 107(d)(3)(E) are discussed in greater detail for the Area in the following paragraphs of this section.

Criteria (1)—The Birmingham Area has attained the 2006 24-hour $PM_{2.5}$ NAAQS

For redesignating a nonattainment area to attainment, the CAA requires EPA to determine that the area has attained the applicable NAAQS (CAA section 107(d)(3)(E)(i)). EPA is proposing to determine that the Birmingham Area continues to attain the 2006 24-hour $PM_{2.5}$ NAAQS. For $PM_{2.5}$, an area may be considered to be attaining the 2006 24-hour $PM_{2.5}$ NAAQS if it meets the 2006 24-hour $PM_{2.5}$ NAAQS, as determined in accordance with 40 CFR 50.13 and Appendix N of part 50, based on three complete, consecutive calendar years of quality-assured air quality monitoring data. To attain these NAAQS, the 98th percentile 24-hour concentration, as determined in accordance with 40 CFR part 50, Appendix N, is less than or equal to 35 $\mu g/m^3$ at all relevant monitoring sites in the subject area over a 3-year period. The relevant data must be collected and quality-assured in accordance with 40 CFR part 58 and recorded in the EPA Air Quality System (AQS). The monitors generally should have remained at the same location for the duration of the monitoring period required for demonstrating attainment.

On September 20, 2010, at 75 FR 57186, EPA determined that the Birmingham Area was attaining the 2006 24-hour $PM_{2.5}$ NAAQS. For that action EPA reviewed $PM_{2.5}$ monitoring data from monitoring stations in the Birmingham Area for the 2006 24-hour $PM_{2.5}$ NAAQS for 2007–2009. These data have been quality-assured and are recorded in AQS. EPA has reviewed more recent data which indicates that the Birmingham Area continues to attain the 2006 24-hour $PM_{2.5}$ NAAQS beyond the submitted 3-year attainment period of 2007–2009. The 98th percentiles of the $PM_{2.5}$ concentrations for 2007–2010 and the 3-year average of these values (*i.e.,* design values) are summarized in Table 1. Data available to date in AQS for 2011, which have not yet been certified, indicate the Birmingham Area continues to attain the 2006 24-hour $PM_{2.5}$ NAAQS.

TABLE 1—DESIGN VALUE CONCENTRATIONS FOR THE BIRMINGHAM 2006 24-HOUR $PM_{2.5}$ AREA (μG/M³)

Location	County	Monitor ID	98th Percentile 24-hour concentrations				3-Year design values	
			2007	2008	2009	2010	2007–2009	2008–2010
North Birmingham	Jefferson	01–073–0023	42.8	33.5	24.4	28.7	34	29
McAdory	Jefferson	01–073–1005	30.9	25.8	21.3	22.7	26	23
Bruce Shaw Rd. (Providence).	Jefferson	01–073–1009	31.4	27.3	22.1	18.4	27	23
Asheville Road (Leeds)	Jefferson	01–073–1010	33.0	24.6	19.1	22.3	26	22
Wylam	Jefferson	01–073–2003	37.7	33.5	25.2	25.4	32	28
Hoover	Jefferson	01–073–2006	29.8	25.9	20.4	21.6	25	23
Pinson High School	Jefferson	01–073–5002	34.2	26.4	21.3	20.0	27	23
Corner School Road	Jefferson	01–073–5003	32.5	30.0	21.3	18.3	28	23
Pelham High School	Shelby	01–117–0006	30.9	24.8	21.2	[4] 20.0	26	[4] 22
Highland Avenue (Walker Co.).	Walker	01–127–0002	30.9	24.3	22.1	18.8	26	22

[4] The Pelham High School site did not meet completeness criteria for the third quarter of 2010. However, the maximum third quarter value from 2008–2010 was 33.6 μg/m³ (which occurred in 2008). If this value were used as the 98th percentile 24-hour concentration for 2010, the 24-hour design value for the 2008–2010 period would be 27 μg/m³ and the 2010 design value for the Birmingham Area (from the North Birmingham site) would be unchanged at 29 μg/m³.

The 3-year design value for 2007–2009 submitted by Alabama for redesignation of the Birmingham Area is 34 μg/m³, which meets the NAAQS as described above. Air quality data for 2010 show that the Area continues to attain the $PM_{2.5}$ NAAQS, with a 3-year design value of 29 μg/m³, and that ambient 24-hour concentrations of $PM_{2.5}$ continue to decline. As mentioned above, on September 20, 2010 (75 FR 57186) EPA published a clean data determination for the Birmingham Area for the 2006 24-hour $PM_{2.5}$ NAAQS. In today's action, EPA is proposing to determine that the Area is continuing to attain the 2006 $PM_{2.5}$ NAAQS. EPA will not go forward with the redesignation if the Area does not continue to attain until the time that EPA finalizes the redesignation. As discussed in more detail below, the State of Alabama has committed to continue monitoring in this Area in accordance with 40 CFR part 58.

Criteria (5)—Alabama Has Met All Applicable Requirements Under Section 110 and Part D of Title I of the CAA; and Criteria (2)—Alabama Has a Fully Approved SIP Under Aection 110(k) for the Birmingham Area

For redesignating a nonattainment area to attainment, the CAA requires EPA to determine that the state has met all applicable requirements under section 110 and part D of title I of the CAA (CAA section 107(d)(3)(E)(v)) and that the state has a fully approved SIP under section 110(k) for the area (CAA section 107(d)(3)(E)(ii)). EPA proposes to find that Alabama has met all applicable SIP requirements for the Birmingham Area under section 110 of the CAA (general SIP requirements) for purposes of redesignation. Additionally, EPA proposes to find that the Alabama SIP satisfies the criterion that it meet applicable SIP requirements for purposes of redesignation under part D of title I of the CAA (requirements specific to 2006 24-hour $PM_{2.5}$ nonattainment areas) in accordance with section 107(d)(3)(E)(v). Further, EPA proposes to determine that the SIP is fully approved with respect to all requirements applicable for purposes of redesignation in accordance with section 107(d)(3)(E)(ii). In making these determinations, EPA ascertained which requirements are applicable to the Area and, if applicable, that they are fully approved under section 110(k). SIPs must be fully approved only with respect to requirements that were applicable prior to submittal of the complete redesignation request.

a. The Birmingham Area Has Met All Applicable Requirements Under Section 110 and Part D of the CAA

General SIP requirements. Section 110(a)(2) of title I of the CAA delineates the general requirements for a SIP, which include enforceable emissions limitations and other control measures, means, or techniques; provisions for the establishment and operation of appropriate devices necessary to collect data on ambient air quality; and programs to enforce the limitations. General SIP elements and requirements are delineated in section 110(a)(2) of title I, part A of the CAA. These requirements include, but are not limited to, the following: submittal of a SIP that has been adopted by the state after reasonable public notice and hearing; provisions for establishment and operation of appropriate procedures needed to monitor ambient air quality; implementation of a source permit program; provisions for the implementation of part C requirements (Prevention of Significant Deterioration (PSD)) and provisions for the implementation of part D requirements (New Source Review (NSR) permit programs); provisions for air pollution modeling; and provisions for public and local agency participation in planning and emission control rule development.

Section 110(a)(2)(D) requires that SIPs contain certain measures to prevent sources in a state from significantly contributing to air quality problems in another state. To implement this provision, EPA has required certain states to establish programs to address the interstate transport of air pollutants (*e.g.,* NO_X SIP Call,[5] CAIR,[6] and

[5] On October 27, 1998 (63 FR 57356), EPA issued a NO_X SIP Call requiring the District of Columbia and 22 states to reduce emissions of NO_X in order to reduce the transport of ozone and ozone precursors. In compliance with EPA's NO_X SIP Call, Alabama developed rules governing the control of NO_X emissions from EGUs, major non-EGU industrial boilers, major cement kilns, and internal combustion engines. On December 27, 2002, EPA approved Alabama's rules as fulfilling Phase I (67 FR 78987).

[6] On May 12, 2005 (70 FR 25162), EPA promulgated CAIR, which required 28 upwind States and the District of Columbia to revise their SIPs to include control measures that would reduce emissions of SO_2 and NO_X. Various aspects of CAIR rule were petitioned in court and on December 23, 2008, the U.S. Court of Appeals for the District of Columbia Circuit remanded CAIR to EPA (*see Alabama* v. *EPA,* 550 F.3d 1176 (DC Circuit, December 23, 2008)), which left CAIR in place to ''temporarily preserve the environmental values covered by CAIR'' until EPA replaces it with a rule consistent with the Court's ruling. The Court directed EPA to remedy various areas of the rule that were petitioned consistent with its July 11, 2008 (*see Alabama* v. *EPA,* 531 F.3d 836 (DC Circuit, July 11, 2008)), opinion, but declined to

Continued

CSAPR). The section 110(a)(2)(D) requirements for a state are not linked with a particular nonattainment area's designation and classification in that state. EPA believes that the requirements linked with a particular nonattainment area's designation and classifications are the relevant measures to evaluate in reviewing a redesignation request. The transport SIP submittal requirements, where applicable, continue to apply to a state regardless of the designation of any one particular area in the state. Thus, EPA does not believe that the CAA's interstate transport requirements should be construed to be applicable requirements for purposes of redesignation. However, as discussed later in this notice, addressing pollutant transport from other states is an important part of an area's maintenance demonstration.

In addition, EPA believes other section 110 elements that are neither connected with nonattainment plan submissions nor linked with an area's attainment status are applicable requirements for purposes of redesignation. The area will still be subject to these requirements after the area is redesignated. The section 110 and part D requirements which are linked with a particular area's designation and classification are the relevant measures to evaluate in reviewing a redesignation request. This approach is consistent with EPA's existing policy on applicability (*i.e.,* for redesignations) of conformity and oxygenated fuels requirements, as well as with section 184 ozone transport requirements. *See* Reading, Pennsylvania, proposed and final rulemakings (61 FR 53174–53176, October 10, 1996), (62 FR 24826, May 7, 1997); Cleveland-Akron-Loraine, Ohio, final rulemaking (61 FR 20458, May 7, 1996); and Tampa, Florida, final rulemaking at (60 FR 62748, December 7, 1995). See also the discussion on this issue in the Cincinnati, Ohio, redesignation (65 FR 37890, June 19, 2000), and in the Pittsburgh, Pennsylvania, redesignation (66 FR 50399, October 19, 2001).

EPA has not yet completed rulemaking on a submittal from Alabama dated September 23, 2009, addressing ''infrastructure SIP'' elements required under CAA section 110(a)(2). However, these are statewide requirements that are not a consequence of the nonattainment status of the Birmingham Area. As stated above, EPA believes that section 110 elements not linked to an area's nonattainment status are not applicable for purposes of redesignation. Therefore, notwithstanding the fact that EPA has not yet completed rulemaking on Alabama's submittal for the $PM_{2.5}$ infrastructure SIP elements of section 110(a)(2), EPA believes it has approved all SIP elements under section 110 that must be approved as a prerequisite for redesignating the Birmingham Area to attainment.

Title I, Part D requirements. EPA proposes that if EPA approves Alabama's base year emissions inventory, which is part of the maintenance plan submittal, the Alabama SIP will meet applicable SIP requirements under part D of the CAA. As discussed in greater detail below, EPA believes the emissions inventory is approvable because the 2009 direct $PM_{2.5}$, SO_2, and NO_X emissions for Alabama were developed consistent with EPA guidance for emission inventories and represent a comprehensive, accurate and current inventory as required by CAA section 172(c)(3).

Part D, subpart 1 applicable SIP requirements. EPA has determined that if the approval of the base year emissions inventory, discussed in section VIII of this rulemaking, is finalized, the Alabama SIP will meet the applicable SIP requirements for the Birmingham Area for purposes of redesignation under title I, part D of the CAA. Subpart 1 of part D sets forth the basic nonattainment requirements applicable to all nonattainment areas. All areas that were designated nonattainment for the 1997 Annual $PM_{2.5}$ NAAQS were designated under this subpart of the CAA and the requirements applicable to them are contained in sections 172 and 176.

For purposes of evaluating this redesignation request, the applicable part D, subpart 1 SIP requirements for all nonattainment areas are contained in sections 172(c)(1)–(9) and in section 176. A thorough discussion of the requirements contained in section 172 can be found in the General Preamble for Implementation of title I (57 FR 13498, April 16, 1992).

Subpart 1 Section 172 Requirements. Section 172(c)(1) requires the plans for all nonattainment areas to provide for the implementation of all Reasonable Available Control Measures (RACM) as expeditiously as practicable and to provide for attainment of the national primary ambient air quality standards. EPA interprets this requirement to impose a duty on all nonattainment areas to consider all available control measures and to adopt and implement such measures as are reasonably available for implementation in each area as components of the area's attainment demonstration. Under section 172, states with nonattainment areas must submit plans providing for timely attainment and meeting a variety of other requirements. However, pursuant to 40 CFR 51.1004(c), EPA's September 20, 2010, determination that the Birmingham area was attaining the 24-hour $PM_{2.5}$ standard suspended Alabama's obligation to submit most of the attainment planning requirements that would otherwise apply. Specifically, the determination of attainment suspended Alabama's obligation to submit an attainment demonstration and planning SIPs to provide for reasonable further progress (RFP), reasonable available control measures, and contingency measures under section 172(c)(9).

The General Preamble for Implementation of Title I (57 FR 13498, April 16, 1992) also discusses the evaluation of these requirements in the context of EPA's consideration of a redesignation request. The General Preamble sets forth EPA's view of applicable requirements for purposes of evaluating redesignation requests when an area is attaining a standard (General Preamble for Implementation of Title I (57 FR 13498, April 16, 1992)).

Because attainment has been reached in the Birmingham Area, no additional measures are needed to provide for attainment, and section 172(c)(1) requirements for an attainment demonstration and RACM are no longer considered to be applicable for purposes of redesignation as long as the Area continues to attain the standard until redesignation. *See also* 40 CFR 51.1004(c).

The RFP plan requirement under section 172(c)(2) is defined as progress that must be made toward attainment. This requirement is not relevant for purposes of redesignation because EPA has determined that the Birmingham Area has monitored attainment of the 2006 24-hour $PM_{2.5}$ NAAQS. *See* General Preamble, 57 FR 13564. *See also* 40 CFR 51.1004(c). In addition, because the Birmingham Area has attained the 2006 24-hour $PM_{2.5}$ NAAQS and is no longer subject to a RFP requirement, the requirement to submit the section 172(c)(9) contingency measures is not applicable for purposes of redesignation. *Id.*

Section 172(c)(3) requires submission and approval of a comprehensive, accurate, and current inventory of actual emissions. As part of Alabama's redesignation request for the Birmingham Area, Alabama submitted a

impose a schedule on EPA for completing that action. *Id.* Therefore, CAIR is currently in effect in Alabama.

2009 base year emissions inventory. As discussed below in section VIII, EPA is proposing to approve the 2009 base year inventory submitted with the redesignation request as meeting the section 172(c)(3) emissions inventory requirement.

Section 172(c)(4) requires the identification and quantification of emissions for major new and modified stationary sources to be allowed in an area, and section 172(c)(5) requires source permits for the construction and operation of new and modified major stationary sources anywhere in the nonattainment area. EPA has determined that, since PSD requirements will apply after redesignation, areas being redesignated need not comply with the requirement that a NSR program be approved prior to redesignation, provided that the area demonstrates maintenance of the NAAQS without part D NSR. A more detailed rationale for this view is described in a memorandum from Mary Nichols, Assistant Administrator for Air and Radiation, dated October 14, 1994, entitled, ''Part D New Source Review Requirements for Areas Requesting Redesignation to Attainment.'' Alabama has demonstrated that the Birmingham Area will be able to maintain the NAAQS without part D NSR in effect, and therefore Alabama need not have fully approved part D NSR programs prior to approval of the redesignation request. Nonetheless, Alabama currently has a fully-approved part D NSR program in place. Alabama's PSD program will become effective in the Birmingham Area upon redesignation to attainment. Section 172(c)(6) requires the SIP to contain control measures necessary to provide for attainment of the NAAQS. Because attainment has been reached, no additional measures are needed to provide for attainment.

Section 172(c)(7) requires the SIP to meet the applicable provisions of section 110(a)(2). As noted above, EPA believes the Alabama SIP meets the requirements of section 110(a)(2) applicable for purposes of redesignation.

Section 176 Conformity Requirements. Section 176(c) of the CAA requires states to establish criteria and procedures to ensure that federally supported or funded projects conform to the air quality planning goals in the applicable SIP. The requirement to determine conformity applies to transportation plans, programs and projects that are developed, funded or approved under title 23 of the United States Code (U.S.C.) and the Federal Transit Act (transportation conformity) as well as to all other federally supported or funded projects (general conformity). State transportation conformity SIP revisions must be consistent with Federal conformity regulations relating to consultation, enforcement and enforceability that EPA promulgated pursuant to its authority under the CAA.

EPA interprets the conformity SIP requirements [7] as not applying for purposes of evaluating a redesignation request under section 107(d) because state conformity rules are still required after redesignation and Federal conformity rules apply where state rules have not been approved. *See Wall* v. *EPA,* 265 F.3d 426 (6th Cir. 2001) (upholding this interpretation); *see also* 60 FR 62748 (December 7, 1995) (redesignation of Tampa, Florida). Thus, the Birmingham Area has satisfied all applicable requirements for purposes of redesignation under section 110 and part D of title I of the CAA.

b. The Birmingham Area Has a Fully Approved Applicable SIP Under Section 110(k) of the CAA

If EPA issues a final approval of the base year emissions inventory, EPA will have fully approved the applicable Alabama SIP for the Birmingham 2006 24-hour $PM_{2.5}$ nonattainment area under section 110(k) of the CAA for all requirements applicable for purposes of redesignation. EPA may rely on prior SIP approvals in approving a redesignation request (*see* Calcagni Memorandum at p. 3; *Southwestern Pennsylvania Growth Alliance* v. *Browner,* 144 F.3d 984, 989–90 (6th Cir. 1998); *Wall,* 265 F.3d 426) plus any additional measures it may approve in conjunction with a redesignation action (*see* 68 FR 25426 (May 12, 2003) and citations therein). Following passage of the CAA of 1970, Alabama has adopted and submitted, and EPA has fully approved at various times, provisions addressing the various 2006 24-hour $PM_{2.5}$ NAAQS SIP elements applicable in the Birmingham Area (May 31, 1972, 37 FR 10842; July 13, 2011, 76 FR 41100).

As indicated above, EPA believes that the section 110 elements that are neither connected with nonattainment plan submissions nor linked to an area's nonattainment status are not applicable requirements for purposes of redesignation. In addition, EPA believes that since the part D subpart 1 requirements did not become due prior to submission of the redesignation request, they are also not applicable requirements for purposes of redesignation. *Sierra Club* v. *EPA,* 375 F.3d 537 (7th Cir. 2004); 68 FR 25424, 25427 (May 12, 2003) (redesignation of the St. Louis-East St. Louis Area to attainment of the 1-hour ozone NAAQS). With the approval of the emissions inventory, EPA will have approved all part D subpart 1 requirements applicable for purposes of this redesignation.

Criteria (3)—The Air Quality Improvement in the Birmingham 2006 24-Hour $PM_{2.5}$ NAAQS Nonattainment Area Is Due to Permanent and Enforceable Reductions in Emissions Resulting From Implementation of the SIP and Applicable Federal Air Pollution Control Regulations and Other Permanent and Enforceable Reductions

For redesignating a nonattainment area to attainment, the CAA requires EPA to determine that the air quality improvement in the area is due to permanent and enforceable reductions in emissions resulting from implementation of the SIP and applicable Federal air pollution control regulations and other permanent and enforceable reductions (CAA section 107(d)(3)(E)(iii)). EPA believes that Alabama has demonstrated that the observed air quality improvement in the Birmingham Area is due to permanent and enforceable reductions in emissions resulting from implementation of the SIP, Federal measures, and other state adopted measures.

State, local and Federal measures enacted in recent years have resulted in permanent emission reductions. Most of these emission reductions are enforceable through regulations. A few non-regulatory measures also result in emission reductions.

The state and local measures that have been implemented to date and relied upon by Alabama to demonstrate attainment and/or maintenance include local NO_X controls on cement plants in the Area due to the 8-hour ozone contingency plan, Jefferson and Shelby County burn bans, and voluntary on-road and off-road diesel retrofit projects.

As shown in Table 2, local reasonably available control technology (RACT) PM controls installed in the Birmingham Area have reduced direct $PM_{2.5}$ emissions by approximately 62 tons per year (tpy) as of the end of 2009. These

[7] CAA section 176(c)(4)(E) requires states to submit revisions to their SIPs to reflect certain Federal criteria and procedures for determining transportation conformity. Transportation conformity SIPs are different from the MVEBs that are established in control strategy SIPs and maintenance plans.

controls are associated with the Birmingham Annual $PM_{2.5}$ Attainment Demonstration SIP, submitted to EPA on March 13, 2009.

TABLE 2—SUMMARY OF RACT CONTROLS IN THE BIRMINGHAM AREA

Facility	Source	RACT controls	$PM_{2.5}$ reduction (tpy)	Installation date
W.J. Bullock	Crucible furnaces	Baghouse	3.891	2009
McWane Pipe	Charge handling area	Wet suppression	0.385	2008
Sloss Industries	Coal piles	Wet suppression	0.398	2008
American Cast Iron Pipe	Charge make-up	Wet suppression	11.91	2008
	Roads & process areas	Paving	3.58	2007/2008
	Cupola melting furnace	New Cupola/Bag house & spray suppression.	5.84	2007/2008
	Sand & cement silos	Baghouse	0.09	2008
Nucor Steel	Meltshop fugitives	Baghouse & physical improvements.	28.1	2008
U.S. Pipe	Cupola charge make-up	Wet suppression	1.818	2008
	Sand & cement silos	Bin vents	5.93	2008
Total			61.942	

In addition, closures of certain facilities have resulted in continued reductions of local $PM_{2.5}$ emissions in the Birmingham Area. In late 2009, W.J. Bullock and Sloss Mineral Wool in Jefferson County announced plans to cease operations, resulting in additional $PM_{2.5}$ emission reductions of 0.13 tpy and 130 tpy, respectively. In March 2010, U.S. Pipe ceased production, resulting in an additional emission reduction of 46 tpy of $PM_{2.5}$. In total, the RACT controls and facility closures amount to reductions of greater than eight percent of direct $PM_{2.5}$ point source emissions in Jefferson County.

Furthermore, control equipment installed at utilities in the Birmingham Area have decreased emissions of NO_X and SO_2. These reductions, prompted by the NO_X SIP Call and CAIR, are summarized in Table 3 below. In 2007, flue gas desulfurization systems were added to units 8–10 of Alabama Power Company's (APC) Gorgas Plant in anticipation of CAIR. Selective catalytic reduction (SCR) systems were installed on units 3 and 4 at APC Miller Plant in 2003 as a result of the NO_X SIP Call, with a consent decree requiring year round operation beginning in 2008 in preparation for CAIR. The year round SCR operation requirements have been incorporated into the facilities' title V operating permits and are thus enforceable.

TABLE 3—SUMMARY OF EMISSIONS AND CONTROLS AT UTILITIES IN THE BIRMINGHAM AREA [8]

Facility	Date control installed		Emissions reductions from 2006–2009 (tpy)		
	NO_X	SO_2	NO_X	SO_2	Percent
APC Miller Unit 3	2008		4,680		71
APC Miller Unit 4	2008		3,786		70
APC Gorgas Unit 8		2007		10,007	96
APC Gorgas Unit 9		2007		9,975	96
APC Gorgas Unit 10		2007		40,779	97
APC Gaston Unit 5*		2010		43,579	78
Total Reductions			8,466	104,341	

* Gaston Unit 5 data reflects reductions from 2006–2010.

The Federal measures that have been implemented include the following:

Tier 2 vehicle standards. In addition to requiring NO_X controls, the Tier 2 rule reduced the allowable sulfur content of gasoline to 30 parts per million (ppm) starting in January of 2006. Most gasoline sold in North Carolina prior to this had a sulfur content of approximately 300 ppm.

Heavy-duty gasoline and diesel highway vehicle standards. The second phase of the standards and testing procedures, which began in 2007, reduces particulate matter (PM) and NO_X from heavy-duty highway engines and also reduces highway diesel fuel sulfur content to 15 ppm. The total program is expected to achieve a 90 and 95 percent reduction in PM and NO_X emissions from heavy-duty highway engines, respectively.

Nonroad spark-ignition engines and recreational engines standards. Tier 1 of this standard, implemented in 2004, and Tier 2, implemented in 2007, have reduced and will continue to reduce PM emissions.

Large nonroad diesel engine standards. Promulgated in 2004, this rule is being phased in between 2008 and 2014. This rule will reduce sulfur content in nonroad diesel fuel and, when fully implemented, will reduce NO_X and direct $PM_{2.5}$ emissions by over 90 percent from these engines.

NO_X SIP Call. On October 27, 1998 (63 FR 57356), EPA issued a NO_X SIP Call requiring the District of Columbia and 22 states to reduce emissions of NO_X. Affected states were required to comply with Phase I of the SIP Call beginning in 2004, and Phase II beginning in 2007. Emission reductions

[8] Data in Tables 3 and 4 reflect reported actual emissions from the Clean Air Markets Division Database *http://camddataandmaps.epa.gov/gdm/index.cfm?fuseaction=emissions.wizard.*

resulting from regulations developed in response to the NO_X SIP Call are permanent and enforceable.

CAIR and CSAPR. As previously discussed, the remanded CAIR, originally promulgated to reduce transported pollution, was left in place to ''temporarily preserve the environmental values covered by CAIR'' until EPA replaced it with a rule consistent with the Court's opinion. To remedy CAIR's flaws, EPA promulgated the final CSAPR on August 8, 2011. CSAPR addresses the interstate transport requirements of the CAA with respect to the 1997 ozone, 1997 $PM_{2.5}$ and 2006 $PM_{2.5}$ NAAQS. As noted previously, the requirements of CAIR address emissions through the 2011 control period and CSAPR requires similar or greater emission reductions in the relevant areas in 2012 and beyond.

Because $PM_{2.5}$ concentrations in the Birmingham area are impacted by the transport of sulfates and nitrates, the area's air quality is affected by regulation of SO_2 and NO_X emissions from power plants. Table 4, below, presents statewide EGU emissions data compiled by EPA's Clean Air Markets Division for the years 2002 and 2009. Emissions for 2009 reflect implementation of CAIR. Table 4 shows that Alabama and states impacting the Birmingham Area for the 24-hour $PM_{2.5}$ NAAQS, as indicated in CSAPR, reduced NO_X and SO_2 emissions from EGUs by 1,173,566 tpy and 2,425,474 tpy, respectively, between 2002 and 2009.

TABLE 4—COMPARISON OF 2002 AND 2009 STATEWIDE EGU NO_X AND SO_2 EMISSIONS (TPY) FOR STATES IMPACTING THE BIRMINGHAM AREA [8]

State	NO_X			SO_2		
	2002	2009	Net change 2002–2009	2002	2009	Net change 2002–2009
Alabama	161,559	49,609	−111,950	448,248	277,972	−170,276
Georgia	146,456	57,566	−88,890	512,654	262,258	−250,396
Indiana	281,146	110,969	−170,177	778,868	413,726	−365,142
Kentucky	198,599	78,767	−119,832	482,653	252,002	−230,651
Ohio	370,497	95,785	−274,712	1,132,069	600,687	−531,382
Pennsylvania	200,909	110,239	−90,670	889,766	573,619	−316,147
Tennessee	155,996	27,912	−128,084	336,995	108,042	−228,953
West Virginia	225,371	36,120	−189,251	507,110	174,583	−332,527
Total	1,740,533	566,967	−1,173,566	5,088,363	2,662,889	−2,425,474

As was noted earlier, EPA promulgated CSAPR to address interstate transport of emissions and resulting secondary air pollutants and to replace CAIR. CAIR, among other things, required emission reductions that contributed to the air quality improvement in the Birmingham Area. CSAPR requires substantial reductions of SO_2 and NO_X emissions from EGUs across most of the Eastern United States, with implementation beginning on January 1, 2012. CAIR will continue to be implemented through 2011, and will be replaced by CSAPR beginning in 2012. CSAPR requires reductions of NO_X and SO_2 emissions to levels below the levels that led to attainment of the 1997 24-hour $PM_{2.5}$ standard in the Birmingham Area. Given the remanded status of CAIR, this air quality improvement could not be considered permanent at the time ADEM submitted its request for redesignation of the Birmingham Area. However, since that time CSAPR has been finalized, which mandates even greater reductions than have already occurred under CAIR and, more importantly, more reductions than are needed to maintain the standard in the Area. The reductions of EGU emissions of SO_2 and NO_X contributed to the air quality improvement in the Birmingham Area. Therefore, the final promulgation of CSAPR in combination with the other measures cited by Alabama and described above, ensure that the emission reductions that led the Area to attain the 2006 24-hour $PM_{2.5}$ NAAQS can be considered permanent and enforceable for purposes of section 107(d)(3)(E)(iii).

Criteria (4)—The Birmingham Area Has a Fully Approved Maintenance Plan Pursuant to Section 175A of the CAA

For redesignating a nonattainment area to attainment, the CAA requires EPA to determine that the area has a fully approved maintenance plan pursuant to section 175A of the CAA (CAA section 107(d)(3)(E)(iv)). In conjunction with its request to redesignate the Birmingham Area to attainment for the 2006 24-hour $PM_{2.5}$ NAAQS, ADEM submitted a SIP revision to provide for the maintenance of the 2006 24-hour $PM_{2.5}$ NAAQS for at least 10 years after the effective date of redesignation to attainment. EPA believes this maintenance plan meets the requirements for approval under section 175A of the CAA.

a. What is required in a maintenance plan?

Section 175A of the CAA sets forth the elements of a maintenance plan for areas seeking redesignation from nonattainment to attainment. Under section 175A, the plan must demonstrate continued attainment of the applicable NAAQS for at least 10 years after the Administrator approves a redesignation to attainment. Eight years after the redesignation, the State must submit a revised maintenance plan which demonstrates that attainment will continue to be maintained for the 10 years following the initial 10-year period. To address the possibility of future NAAQS violations, the maintenance plan must contain contingency measures as EPA deems necessary to assure prompt correction of any future 2006 24-hour $PM_{2.5}$ violations. The Calcagni Memorandum provides further guidance on the content of a maintenance plan, explaining that a maintenance plan should address five requirements: The attainment emissions inventory, maintenance demonstration, monitoring, verification of continued attainment, and a contingency plan. As is discussed more fully below, EPA finds that Alabama's maintenance plan includes all the necessary components and is thus proposing to approve it as a revision to the Alabama SIP.

b. Attainment Emissions Inventory

The Birmingham Area attained the 2006 24-hour $PM_{2.5}$ NAAQS based on monitoring data for the 3-year period

from 2007–2009. Alabama selected 2009 as the attainment emissions inventory year. The attainment inventory identifies a level of emissions in the Area that is sufficient to attain the 2006 24-hour $PM_{2.5}$ NAAQS. Alabama began development of the attainment inventory by first generating a baseline emissions inventory for the Birmingham Area. As noted above, the year 2009 was chosen as the base year for developing a comprehensive emissions inventory for direct $PM_{2.5}$ and the primary $PM_{2.5}$ precursors, SO_2 and NO_X, for which projected emissions could be developed for 2012, 2015, 2018, 2021, and 2024. ADEM used actual point source emissions data for 2009 for all sources in Jefferson County and a majority of sources in Shelby County. The Visibility Improvement—State and Tribal Association of the Southeast (VISTAS) projected 2009 emissions were used only where actual emissions were unavailable. The projected inventory included with the maintenance plan estimates emissions forward to 2024, which is beyond the 10-year interval required in section 175A of the CAA. In addition to comparing the final year of the plan, 2024, to the base year, 2009, Alabama compared interim years to the baseline to demonstrate that these years are also expected to show continued maintenance of the 24-hour $PM_{2.5}$ standard. On March 7, 2011, at the request of EPA, ADEM submitted a letter in support of the June 17, 2010, redesignation request. The letter contains revisions to emissions data in Tables 4.3–1, 4.3–2, and 4.3–3 of the redesignation request to correct administrative errors and a clarification on how the 2009 point source inventory was developed. A copy of the letter is included in the docket for this proposed rulemaking (EPA–R04–OAR–2011–0043) and can be obtained from the *www.regulations.gov* Web site.

The emissions inventory is composed of four major types of sources: Point, area, on-road mobile and non-road mobile. The future year emissions inventories have been estimated using projected rates of growth in population, traffic, economic activity, expected control programs, and other parameters. Due to the remand of CAIR, ADEM did not include any emissions reductions expected under the rule past 2012. The promulgation of CSAPR ensured that reductions expected under CAIR would remain, thus EPA considers ADEM's projections to be conservative estimates. Non-road mobile emissions estimates were based on the EPA's NONROAD2008a non-road mobile model, with the exception of the railroad locomotives, commercial marine, and aircraft engine. These emissions are estimated by taking activity data, such as landings and takeoffs, and multiplying by an Economic Growth Analysis System (EGAS) emission factor. On-road mobile source emissions were calculated using EPA's MOVES2010 mobile emission factors model. The 2009 SO_2, NO_X and $PM_{2.5}$ emissions for the Birmingham Area, as well as the emissions for other years, were developed consistent with EPA guidance and are summarized in Tables 5 through 8 of the following subsection discussing the maintenance demonstration.

c. Maintenance Demonstration

The June 17, 2010, final submittal includes a maintenance plan for the Birmingham nonattainment area. The maintenance plan:

(i) Shows compliance with and maintenance of the 24-hour $PM_{2.5}$ standard by providing information to support the demonstration that current and future emissions of SO_2, NO_X and $PM_{2.5}$ remain at or below 2009 emissions levels.

(ii) Uses 2009 as the attainment year and includes future emissions inventory projections for 2012, 2015, 2018, 2021, and 2024.

(iii) Identifies an ''out year'' at least 10 years (and beyond) after the time necessary for EPA to review and approve the maintenance plan. Per 40 CFR part 93, NO_X and $PM_{2.5}$ MVEBs were established for the last year (2024) of the maintenance plan (see section VI below).

(iv) Provides actual and projected emissions inventories, in tons per day (tpd), for the Birmingham nonattainment area, as shown in Tables 5 through 8 below.

TABLE 5—ACTUAL AND PROJECTED 24-HOUR $PM_{2.5}$ EMISSIONS (TPD) FOR THE BIRMINGHAM AREA

Sector	2009	2012	2015	2018	2021	2024
Point	11.22	9.75	10.29	10.88	11.47	12.10
Area	12.35	12.18	12.37	12.57	12.78	12.98
Nonroad	1.60	1.49	1.32	1.15	1.05	1.00
Mobile	2.36	1.90	1.45	1.30	1.15	0.96
Total	27.53	25.32	25.43	25.90	26.45	27.04

TABLE 6—ACTUAL AND PROJECTED 24-HOUR NO_X EMISSIONS (TPD) FOR THE BIRMINGHAM AREA

Sector	2009	2012	2015	2018	2021	2024
Point	96.25	96.41	98.01	99.66	101.65	103.69
Area	11.24	11.42	11.59	11.77	11.94	12.12
Nonroad	27.31	24.60	21.74	19.65	19.19	19.42
Mobile	72.05	57.74	43.43	37.34	31.25	25.20
Total	206.85	190.17	174.77	168.42	164.03	160.43

TABLE 7—ACTUAL AND PROJECTED 24-HOUR SO_2 EMISSIONS (TPD) FOR THE BIRMINGHAM AREA

Sector	2009	2012	2015	2018	2021	2024
Point	493.41	203.71	204.41	205.17	205.84	206.92
Area	1.06	1.09	1.11	1.14	1.16	1.19
Nonroad	0.50	0.20	0.19	0.19	0.19	0.20

TABLE 7—ACTUAL AND PROJECTED 24-HOUR SO_2 EMISSIONS (TPD) FOR THE BIRMINGHAM AREA—Continued

Sector	2009	2012	2015	2018	2021	2024
Mobile	0.43	0.37	0.29	0.30	0.32	0.33
Total	495.40	205.37	206.00	206.80	207.51	208.64

TABLE 8—EMISSION ESTIMATES FOR BIRMINGHAM AREA

Year	$PM_{2.5}$ (tpd)	NO_X (tpd)	SO_2 (tpd)
2009	27.53	206.85	495.40
2012	25.32	190.17	205.37
2015	25.43	174.77	206.00
2018	25.90	168.42	206.80
2021	26.45	164.03	207.51
2024	27.04	160.43	208.64
Difference from 2009 to 2024	−0.49	−46.42	−286.76

Tables 5 through 8 summarize the 2009 and future projected emissions of direct $PM_{2.5}$ and precursors from the counties in the Birmingham Area. In situations where local emissions are the primary contributor to nonattainment, the ambient air quality standard should not be violated in the future as long as emissions from within the nonattainment area remain at or below the baseline with which attainment was achieved. Alabama has projected emissions as described previously and determined that emissions in the Birmingham Area will remain below those in the attainment year inventory for the duration of the maintenance plan.

As discussed in section VI of this proposed rulemaking, a safety margin is the difference between the attainment level of emissions (from all sources) and the projected level of emissions (from all sources) in the maintenance plan. The attainment level of emissions is the level of emissions during one of the years in which the area met the NAAQS. Alabama selected 2009 as the attainment emissions inventory year for the Birmingham Area. Alabama calculated the safety margins in its submittal as 46.42 tpd for NO_X and 0.49 tpd for $PM_{2.5}$. The State has decided to allocate 23.21 tpd of the available NO_X safety margin and 0.245 tpd of the available $PM_{2.5}$ safety margin to the 2024 MVEBs for the Birmingham Area. Therefore, the remaining safety margin for NO_X will be 23.21 tpd and the remaining safety margin for $PM_{2.5}$ will be 0.245 tpd. This allocation and the resulting available safety margin for the Birmingham Area are discussed further in section VI of this proposed rulemaking.

d. Monitoring Network

There are currently ten monitors measuring $PM_{2.5}$ in the Birmingham Area. The State of Alabama, through ADEM, has committed to continue operation of the monitors in the Birmingham Area in compliance with 40 CFR part 58 and have thus addressed the requirement for monitoring. EPA approved Alabama's 2010 monitoring plan on October 8, 2010.

e. Verification of Continued Attainment

The State of Alabama, through ADEM, has the legal authority to enforce and implement the requirements of the Birmingham Area 2006 24-hour $PM_{2.5}$ maintenance plan. This includes the authority to adopt, implement and enforce any subsequent emissions control contingency measures determined to be necessary to correct future $PM_{2.5}$ attainment problems.

ADEM will track the progress of the maintenance plan by performing future reviews of triennial emission inventories for the Birmingham Area as required in the Air Emissions Reporting Rule (AERR) and Consolidated Emissions Reporting Rule (CERR). For these periodic inventories, ADEM will review the assumptions made for the purpose of the maintenance demonstration concerning projected growth of activity levels. If any of these assumptions appear to have changed substantially, then ADEM will re-project emissions for the Birmingham Area.

f. Contingency Measures in the Maintenance Plan

The contingency measures are designed to promptly correct a violation of the NAAQS that occurs after redesignation. Section 175A of the CAA requires that a maintenance plan include such contingency measures as EPA deems necessary to assure that the state will promptly correct a violation of the NAAQS that occurs after redesignation. The maintenance plan should identify the contingency measures to be adopted, a schedule and procedure for adoption and implementation, and a time limit for action by the State. A state should also identify specific indicators to be used to determine when the contingency measures need to be implemented. The maintenance plan must include a requirement that a state will implement all measures with respect to control of the pollutant that were contained in the SIP before redesignation of the area to attainment in accordance with section 175A(d).

In the June 17, 2010, submittal, Alabama affirms that all programs instituted by the State and EPA will remain enforceable and that sources are prohibited from reducing emissions controls following the redesignation of the Area. The contingency plan included in the submittal includes a triggering mechanism to determine when contingency measures are needed and a process of developing and implementing appropriate control measures. The State of Alabama will use actual ambient monitoring data as the triggering event to determine when contingency measures should be implemented.

As previously mentioned, on March 7, 2011, at the request of EPA, ADEM submitted a letter in support of the June 17, 2010, redesignation request. The letter contains clarifying information regarding the contingency measures included in the maintenance plan and an additional emissions inventory-based contingency measure trigger. A copy of the letter is included in the docket for this proposed rulemaking (EPA–R04–OAR–2011–0043) and can be obtained from the *www.regulations.gov* Web site.

Alabama has identified a primary trigger as occurring when the 24-hour $PM_{2.5}$ NAAQS, as described in section II above, are violated. Alabama commits to adopting, within 18 months of a certified violation of the 24-hour $PM_{2.5}$ NAAQS, one or more of the control measures discussed below. Additionally, Alabama has identified a secondary trigger to occur when the 98th percentile 24-hour concentration for a single year at any monitor in the nonattainment area records a concentration of 36 μg/m³ or greater. In such a case, the state will evaluate existing controls measures and determine whether any further emission reduction measures should be implemented. ADEM will consider several factors in its evaluation of the need for additional controls measures in the event of a future year violation of the 2006 24-hour $PM_{2.5}$ NAAQS. Depending on the timing of the future year violations, additional local and regional emissions reductions may still be planned. ADEM will evaluate the air quality impacts of those regulatory programs in determining if further reductions are required to ensure continued maintenance of the 24-hour $PM_{2.5}$ NAAQS in the Birmingham Maintenance Area.

In addition to the triggers indicated above, Alabama will monitor regional emissions through the CERR and AERR and compare them to the projected inventories and the attainment year inventory. If the actual emissions from these inventories are greater than ten percent above the projected emissions presented in the maintenance plan, than ADEM will evaluate whether additional planning or control measures are needed to prevent the Area from violating the NAAQS or to correct a potential violation.

In the event that further reductions are needed to ensure continued maintenance, the list of ''culpable sources'' developed by Alabama in the State's 2009 attainment demonstration for the Annual $PM_{2.5}$ NAAQS will be evaluated for additional control of direct $PM_{2.5}$ emissions. As additional information, a copy of section 8.2 of the Birmingham Annual $PM_{2.5}$ Attainment Demonstration SIP, submitted to EPA on March 13, 2009, was included with the March 7, 2011, letter to EPA, which is included in the docket for this proposed rulemaking (EPA–R04–OAR–2011–0043). This section contains the detailed contingency measures for the annual $PM_{2.5}$ SIP and was referenced in the redesignation request and maintenance plan for the 24-hour $PM_{2.5}$ NAAQS. In addition, ADEM will consider the possibility of expanding the current voluntary diesel retrofit program currently in place in the Birmingham Area.

Once a primary trigger is initiated, ADEM will commence analysis, including review of expected emissions reductions from local and regional regulatory programs, air quality modeling, and emissions inventory assessment to determine emission control measures that will be required to attain or maintain the 2006 24-hour $PM_{2.5}$ NAAQS. All controls that will be relied upon for contingency purposes are scheduled to be installed in 2012 or later and are therefore not already relied upon in for maintenance. The schedule for implementation of this plan and details of steps ADEM will take to bring the area back into compliance are outlined in Table 9.

At least one of the following contingency measures will be adopted and implemented upon a primary triggering event:

- Continued implementation of previously adopted controls which have not yet been realized but are sufficient to address the violation, including future year emission reductions from Federal measures to address interstate pollutant transport and from the Georgia multi-pollutant rule;
- Additional controls of direct $PM_{2.5}$ emissions from the list of ''culpable sources'' developed in the $PM_{2.5}$ annual attainment SIP and included in the March 7, 2011, letter;
- Expansion of the current voluntary diesel retrofit program in the Birmingham Area;
- Any additional controls deemed beneficial to address the violation at the time of the trigger.

TABLE 9—SCHEDULE FOR PERMIT REVISIONS AND/OR RULE REVISIONS FOR IMPLEMENTING CONTINGENCY MEASURES

Step	Description of action	Schedule
1	Identify and quantify the emissions reductions expected to result from current and future state and Federal regulatory programs.	3 months.
2	Use the best available air quality modeling to evaluate the air quality improvement expected from step 1 above.	6 months.
3	Draft any needed permit conditions or SIP regulations	3 months.
4	Complete rulemaking or permit revision process and submit to EPA	6 months.
	Maximum time required for completion	18 months.

EPA has concluded that the maintenance plan adequately addresses the five basic components of a maintenance plan: Attainment inventory, monitoring network, verification of continued attainment, and a contingency plan. Therefore, the maintenance plan SIP revision submitted by the State of Alabama for the Birmingham Area meets the requirements of section 175A of the CAA and is approvable.

VI. What is EPA's analysis of Alabama's proposed NO_X and $PM_{2.5}$ MVEBs for the Birmingham area?

Under section 176(c) of the CAA, new transportation plans, programs, and projects, such as the construction of new highways, must ''conform'' to (*i.e.,* be consistent with) the part of the state's air quality plan that addresses pollution from cars and trucks. Conformity to the SIP means that transportation activities will not cause new air quality violations, worsen existing violations, or delay timely attainment of the NAAQS or any interim milestones. If a transportation plan does not conform, most new projects that would expand the capacity of roadways cannot go forward. Regulations at 40 CFR part 93 set forth EPA policy, criteria, and procedures for demonstrating and assuring conformity of such transportation activities to a SIP. The regional emissions analysis is one, but not the only, requirement for implementing transportation conformity. Transportation conformity is a requirement for nonattainment and maintenance areas. Maintenance areas are areas that were previously nonattainment for a particular NAAQS but have since been redesignated to

attainment with an approved maintenance plan for that NAAQS.

Under the CAA, states are required to submit, at various times, control strategy SIPs and maintenance plans for nonattainment areas. These control strategy SIPs (including RFP and attainment demonstration) and maintenance plans create MVEBs for criteria pollutants and/or their precursors to address pollution from cars and trucks. Per 40 CFR part 93, a MVEB must be established for the last year of the maintenance plan. A state may adopt MVEBs for other years as well. The MVEB is the portion of the total allowable emissions in the maintenance demonstration that is allocated to highway and transit vehicle use and emissions. *See* 40 CFR 93.101. The MVEB serves as a ceiling on emissions from an area's planned transportation system. The MVEB concept is further explained in the preamble to the November 24, 1993, Transportation Conformity Rule (58 FR 62188). The preamble also describes how to establish the MVEB in the SIP and how to revise the MVEB.

After interagency consultation with the transportation partners for the Birmingham Area, Alabama has elected to develop MVEBs for NO_X and $PM_{2.5}$ for the entire nonattainment area (Jefferson, Shelby, and the nonattainment portion of Walker Counties). Alabama is developing these MVEBs, as required, for the last year of its maintenance plan, 2024. The MVEBs reflect the total on-road emissions for 2024, plus an allocation from the available NO_X and $PM_{2.5}$ safety margin. Under 40 CFR 93.101, the term ''safety margin'' is the difference between the attainment level (from all sources) and the projected level of emissions (from all sources) in the maintenance plan. The safety margin can be allocated to the transportation sector; however, the total emissions must remain below the attainment level. The NO_X and $PM_{2.5}$ MVEBs and allocation from the safety margin were developed in consultation with the transportation partners and were added to account for uncertainties in population growth, changes in model vehicle miles traveled and new emission factor models. The NO_X and $PM_{2.5}$ MVEBs for the Birmingham Area are defined in Table 10 below.

TABLE 10—BIRMINGHAM AREA $PM_{2.5}$ NO_X MVEBS

[tpd]

	$PM_{2.5}$	NO_X
2024 On-road Mobile Emissions (tpd)	0.96	25.20
Safety Margin Allocated to MVEB	0.245	23.21
2024 Conformity MVEB	1.21	48.41

As mentioned above, the Birmingham Area has chosen to allocate a portion of the available safety margins to the NO_X and $PM_{2.5}$ MVEBs for 2024. This allocation is 23.21 tpd and 0.245 tpd for NO_X and $PM_{2.5}$, respectively. Therefore, the remaining safety margins for 2024 are 23.21 tpd and 0.245 tpd for NO_X and $PM_{2.5}$, respectively.

Through this rulemaking, EPA is proposing to approve the MVEBs for NO_X and $PM_{2.5}$ for 2024 for the Birmingham Area because EPA has determined that the Area maintains the 2006 24-hour $PM_{2.5}$ NAAQS with the emissions at the levels of the budgets. Once the MVEBs for the Birmingham Area are approved or found adequate (whichever is completed first), they must be used for future conformity determinations. After thorough review, EPA has determined that the budgets meet the adequacy criteria, as outlined in 40 CFR 93.118(e)(4), and is proposing to approve the budgets because they are consistent with maintenance of the 2006 24-hour $PM_{2.5}$ NAAQS through 2024.

VII. What is the status of EPA's adequacy determination for the proposed NO_X and $PM_{2.5}$ MVEBs for 2024 for the Birmingham Area?

When reviewing submitted ''control strategy'' SIPs or maintenance plans containing MVEBs, EPA may affirmatively find the MVEB contained therein adequate for use in determining transportation conformity. Once EPA affirmatively finds the submitted MVEB is adequate for transportation conformity purposes, that MVEB must be used by state and Federal agencies in determining whether proposed transportation projects conform to the SIP as required by section 176(c) of the CAA.

EPA's substantive criteria for determining adequacy of a MVEB are set out in 40 CFR 93.118(e)(4). The process for determining adequacy consists of three basic steps: public notification of a SIP submission, a public comment period, and EPA's adequacy determination. This process for determining the adequacy of submitted MVEBs for transportation conformity purposes was initially outlined in EPA's May 14, 1999, guidance, ''Conformity Guidance on Implementation of March 2, 1999, Conformity Court Decision.'' EPA adopted regulations to codify the adequacy process in the Transportation Conformity Rule Amendments for the ''New 8-Hour Ozone and $PM_{2.5}$ National Ambient Air Quality Standards and Miscellaneous Revisions for Existing Areas; Transportation Conformity Rule Amendments—Response to Court Decision and Additional Rule Change,'' on July 1, 2004 (69 FR 40004). Additional information on the adequacy process for transportation conformity purposes is available in the proposed rule entitled, ''Transportation Conformity Rule Amendments: Response to Court Decision and Additional Rule Changes,'' 68 FR 38974, 38984 (June 30, 2003).

As discussed earlier, Alabama's maintenance plan submission includes NO_X and $PM_{2.5}$ MVEBs for the Birmingham Area for 2024, the last year of the maintenance plan. EPA reviewed the NO_X and $PM_{2.5}$ MVEBs through the adequacy process. The Alabama SIP submission, including the Birmingham Area NO_X and $PM_{2.5}$ MVEBs, was open for public comment on EPA's adequacy Web site on March 24, 2011, found at: *http://www.epa.gov/otaq/state resources/transconf/currsips.htm.* The EPA public comment period on adequacy for the MVEBs for 2024 for Birmingham Area closed on April 25, 2011. EPA did not receive any comments on the adequacy of the MVEBs, nor did EPA receive any requests for the SIP submittal.

EPA intends to make its determination on the adequacy of the 2024 MVEBs for the Birmingham Area for transportation conformity purposes in the near future by completing the adequacy process that was started on March 24, 2011. After EPA finds the 2024 MVEBs adequate or approves them, the new MVEBs for NO_X and $PM_{2.5}$ must be used for future transportation conformity determinations. For required regional emissions analysis years that involve 2024 or beyond, the applicable budgets will be the new 2024 MVEBs established in the maintenance plan, as defined in section VI of this proposed rulemaking.

VIII. What is EPA's analysis of the proposed 2009 base year emissions inventory for the Birmingham area?

As discussed above, section 172(c)(3) of the CAA requires areas to submit a base year emissions inventory. As part of Alabama's request to redesignate the

Birmingham Area, the State submitted a 2009 base year emissions inventory to meet this requirement. Emissions contained in the submittal cover the general source categories of point sources, area sources, on-road mobile sources, and non-road mobile sources. All emission summaries were accompanied by source-specific descriptions of emission calculation procedures and sources of input data. Alabama's submittal documents 2009 emissions in the Birmingham Area in units of tpd. Table 11 below provides a summary of the 2009 emissions of direct $PM_{2.5}$, NO_X, and SO_2 for the Birmingham Area. In today's notice, EPA is proposing to approve this 2009 base year inventory as meeting the section 172(c)(3) emissions inventory requirement.

TABLE 11—BIRMINGHAM AREA 2009 EMISSIONS FOR $PM_{2.5}$, NO_X, AND SO_2

[tpd (percent total)]

Source	$PM_{2.5}$		NO_X		SO_2	
Point Source Total	11.22	[40.8]	96.25	[46.5]	493.41	[99.6]
Area Source Total	12.35	[44.9]	11.24	[5.4]	1.06	[0.2]
On-Road Mobile Source Total	2.36	[8.6]	72.05	[34.8]	0.43	[0.1]
Non-Road Mobile Source Total	1.60	[5.8]	27.31	[13.2]	0.50	[0.1]
Total for all Sources	27.53	.....	206.85	.....	495.40	.....

IX. What is the effect of EPA's proposed actions?

EPA's proposed actions establish the basis upon which EPA may take final action on the issues being proposed for approval today. Approval of Alabama's redesignation request would change the legal designation of Jefferson and Shelby Counties and the designated portion of Walker County in Alabama for the 2006 24-hour $PM_{2.5}$ NAAQS, found at 40 CFR part 81, from nonattainment to attainment. Approval of Alabama's request would also incorporate a plan for maintaining the 2006 24-hour $PM_{2.5}$ NAAQS in the Birmingham Area through 2024 into the Alabama SIP. This maintenance plan includes contingency measures to remedy any future violations of the 2006 24-hour $PM_{2.5}$ NAAQS and procedures for evaluation of potential violations. The maintenance plan also establishes NO_X and $PM_{2.5}$ MVEBs for the Birmingham Area. The NO_X and $PM_{2.5}$ MVEBs for 2024 for the Birmingham Area are 48.41 tpd and 1.21 tpd, respectively. Final action would also approve the Area's emissions inventory under CAA section 172(c)(3). Additionally, EPA is notifying the public of the status of EPA's adequacy determination for the newly-established $PM_{2.5}$ and NO_X MVEBs for 2024 for the Birmingham Area.

X. Proposed Actions on the Redesignation Request and Maintenance Plan SIP Revisions Including Approval of the NO_X and $PM_{2.5}$ MVEBs for 2024 for the Birmingham Area

EPA previously determined that the Birmingham Area was attaining the 2006 24-hour $PM_{2.5}$ NAAQS on September 20, 2010, at 75 FR 57186. EPA is now taking three separate but related actions regarding the Area's redesignation and maintenance of the 2006 24-hour $PM_{2.5}$ NAAQS.

First, EPA is proposing to determine, based on complete, quality-assured and certified monitoring data for the 2007–2009 monitoring period, and after review of preliminary data in AQS for 2008–2010, that the Birmingham Area continues to attain the 2006 24-hour $PM_{2.5}$ NAAQS. EPA is proposing to determine that the Birmingham Area has met the criteria under CAA section 107(d)(3)(E) for redesignation from nonattainment to attainment for the 2006 24-hour $PM_{2.5}$ NAAQS. On this basis, EPA is proposing to approve Alabama's redesignation request for the Birmingham Area.

Second, EPA is proposing to approve Alabama's 2009 emissions inventory for the Birmingham Area (under CAA section 172(c)(3)). Alabama selected 2009 as the attainment emissions inventory year for the Birmingham Area. This attainment inventory identifies a level of emissions in the Area that is sufficient to attain the 2006 24-hour $PM_{2.5}$ NAAQS and also is a current, comprehensive inventory that meets the requirements of section 172(c)(3).

Third, EPA is proposing to approve the maintenance plan for the Birmingham Area, including the $PM_{2.5}$ and NO_X MVEBs for 2024, into the Alabama SIP (under CAA section 175A). The maintenance plan demonstrates that the Area will continue to maintain the 2006 24-hour $PM_{2.5}$ NAAQS, and the budgets meet all of the adequacy criteria contained in 40 CFR 93.118(e)(4) and (5). Further, as part of today's action, EPA is describing the status of its adequacy determination for the $PM_{2.5}$ and NO_X MVEBs for 2024 in accordance with 40 CFR 93.118(f)(1). Within 24 months from the effective date of EPA's adequacy determination for the MVEBs or the effective date for the final rule for this action, whichever is earlier, the transportation partners will need to demonstrate conformity to the new NO_X and $PM_{2.5}$ MVEBs pursuant to 40 CFR 93.104(e).

If finalized, approval of the redesignation request would change the official designation of Jefferson and Shelby Counties in their entireties and the nonattainment portion of Walker County in the Birmingham Area for the 2006 24-hour $PM_{2.5}$ NAAQS, found at 40 CFR part 81, from nonattainment to attainment.

XI. Statutory and Executive Order Reviews

Under the CAA, redesignation of an area to attainment and the accompanying approval of a maintenance plan under section 107(d)(3)(E) are actions that affect the status of a geographical area and do not impose any additional regulatory requirements on sources beyond those imposed by state law. A redesignation to attainment does not in and of itself create any new requirements, but rather results in the applicability of requirements contained in the CAA for areas that have been redesignated to attainment. Moreover, the Administrator is required to approve a SIP submission that complies with the provisions of the Act and applicable Federal regulations. 42 U.S.C. 7410(k); 40 CFR 52.02(a). Thus, in reviewing SIP submissions, EPA's role is to approve state choices, provided that they meet the criteria of the CAA. Accordingly, this proposed action merely approves state law as meeting Federal requirements and does not impose additional requirements beyond those imposed by state law. For this reason, these proposed actions:

- Are not ''significant regulatory action[s]'' subject to review by the Office of Management and Budget under

Executive Order 12866 (58 FR 51735, October 4, 1993);

- Do not impose an information collection burden under the provisions of the Paperwork Reduction Act (44 U.S.C. 3501 *et seq.*);
- Are certified as not having a significant economic impact on a substantial number of small entities under the Regulatory Flexibility Act (5 U.S.C. 601 *et seq.*);
- Do not contain any unfunded mandate or significantly or uniquely affect small governments, as described in the Unfunded Mandates Reform Act of 1995 (Pub. L. 104–4);
- Do not have Federalism implications as specified in Executive Order 13132 (64 FR 43255, August 10, 1999);
- Are not economically significant regulatory actions based on health or safety risks subject to Executive Order 13045 (62 FR 19885, April 23, 1997);
- Are not significant regulatory actions subject to Executive Order 13211 (66 FR 28355, May 22, 2001);
- Are not subject to requirements of Section 12(d) of the National Technology Transfer and Advancement Act of 1995 (15 U.S.C. 272 note) because application of those requirements would be inconsistent with the CAA; and
- Do not provide EPA with the discretionary authority to address, as appropriate, disproportionate human health or environmental effects, using practicable and legally permissible methods, under Executive Order 12898 (59 FR 7629, February 16, 1994).

In addition, this proposed rule does not have Tribal implications as specified by Executive Order 13175 (65 FR 67249, November 9, 2000), because the SIP is not approved to apply in Indian country located in the State, and EPA notes that it will not impose substantial direct costs on Tribal governments or preempt Tribal law.

List of Subjects

40 CFR Part 52

Environmental protection, Air pollution control, Intergovernmental relations, Reporting and recordkeeping requirements, and Particulate matter.

40 CFR Part 81

Environmental protection, Air pollution control.

Authority: 42 U.S.C. 7401 *et seq.*

Dated: November 2, 2011.

Gwendolyn Keyes Fleming,

Regional Administrator, Region 4.

[FR Doc. 2011–29183 Filed 11–9–11; 8:45 am]

BILLING CODE 6560–50–P

ENVIRONMENTAL PROTECTION AGENCY

40 CFR Part 300

[EPA–HQ–SFUND–1983–0002; FRL–9488–6]

National Oil and Hazardous Substance Pollution Contingency Plan National Priorities List: Partial Deletion of the Tar Lake Superfund Site

AGENCY: Environmental Protection Agency (EPA).

ACTION: Proposed rule.

SUMMARY: The Environmental Protection Agency (EPA) Region 5 is issuing a Notice of intent of Partial Deletion of the following two parcels of the Tar Lake Site Superfund (Site) located in Mancelona, Michigan from the National Priorities List (NPL): the non-East Tailings Area (ETA) part of property PIN 05–11–129–006–00 (41.4 acres); and the non-ETA part of property PIN 05–11–129–007–00 (33.63 acres) and requests public comments on this proposed action. The NPL, promulgated pursuant to section 105 of the Comprehensive Environmental Response, Compensation, and Liability Act (CERCLA) of 1980, as amended, is an appendix of the National Oil and Hazardous Substances Pollution Contingency Plan (NCP). EPA and the State of Michigan, through the Michigan Department of Environmental Quality, have determined that all appropriate response actions at these two parcels under CERCLA have been completed. However, this deletion does not preclude future actions under Superfund.

This partial deletion pertains only to the two property PINs listed above. The deletion of these two parcels from the Site affects all surface soils, subsurface soils, structures and groundwater within the boundaries of these parcels. In 2005, the ETA, approximately 45.49 acres, in the northeastern part of the Site, was deleted from the NPL when EPA determined that the ETA was acceptable for unrestricted use and unlimited exposure (UU/UE). The two parcels being proposed for deletion are adjacent to and south of the ETA. The current remaining areas of the Site will remain on the NPL and are not being considered for deletion as part of this action.

DATES: Comments must be received by December 12, 2011.

ADDRESSES: Submit your comments, identified by Docket ID No. EPA–HQ–SFUND–1983–0002, by one of the following methods:

- *http://www.regulations.gov:* Follow on-line instructions for submitting comments.
- *Email:* Karen Cibulskis, Remedial Project Manager, at *cibulskis.karen@epa.gov* or Megan McSeveney, Community Involvement Coordinator, at *mcseveney.megan@epa.gov.*
- *Fax:* Gladys Beard, Deletion Process Manager, at (312) 697–2077.
- *Mail:* Karen Cibulskis, Remedial Project Manager, U.S. Environmental Protection Agency (SR–6J), 77 West Jackson Boulevard, Chicago, IL 60604, (312) 886–1843, or Megan McSeveney, Community Involvement Coordinator, U.S. Environmental Protection Agency (SI–7J), 77 West Jackson Boulevard, Chicago, IL 60604, (312) 886–1972 or (800) 621–8431.
- *Hand delivery:* Megan McSeveney, Community Involvement Coordinator, U.S. Environmental Protection Agency, Region 5 (SI–7J), 77 West Jackson Boulevard, Chicago, IL 60604. Such deliveries are only accepted during the docket's normal hours of operations, and special arrangements should be made for deliveries of boxed information. The normal business hours are Monday through Friday, 8:30 a.m. to 4:30 p.m., excluding Federal holidays.

Instructions: Direct your comments to Docket ID No. EPA–HQ–SFUND–1983–0002. EPA's policy is that all comments received will be included in the public docket without change and may be made available online at *http://www.regulations.gov,* including any personal information provided, unless the comment includes information claimed to be Confidential Business Information (CBI) or other information whose disclosure is restricted by statute. Do not submit information that you consider to be CBI or otherwise protected through *http://www.regulations.gov* or email. The *http://www.regulations.gov* Web site is an ''anonymous access'' system, which means EPA will not know your identity or contact information unless you provide it in the body of your comment. If you send an email comment directly to EPA without going through *http://www.regulations.gov,* your email address will be automatically captured and included as part of the comment that is placed in the public docket and made available on the Internet. If you submit an electronic comment, EPA recommends that you include your name and other contact information in the body of your comment and with any disk or CD–ROM you submit. If EPA cannot read your comment due to technical difficulties and cannot contact you for clarification, EPA may not be

able to consider your comment. Electronic files should avoid the use of special characters, any form of encryption, and be free of any defects or viruses.

Docket

All documents in the docket are listed in the *http://www.regulations.gov* index. Although listed in the index, some information is not publicly available, *e.g.,* CBI or other information whose disclosure is restricted by statute. Certain other material, such as copyrighted material, will be publicly available only in the hard copy. Publicly available docket materials are available either electronically at *http://www.regulations.gov* or in hard copy at: U.S. Environmental Protection Agency—Region 5, 77 West Jackson Boulevard, Chicago, IL 60604.

Hours: Monday through Friday, 8:30 a.m. to 4:30 p.m., excluding Federal holidays.

Mancelona Public Library, 202 West State Street, Mancelona, MI 49659, (231) 587–9451.

Hours: Monday through Thursday, 9 a.m. to 8 p.m.; Friday 12 p.m. to 6 p.m.; and Saturday 9 a.m. to 5 p.m.

FOR FURTHER INFORMATION CONTACT: Karen Cibulskis, Remedial Project Manager, U.S. Environmental Protection Agency (SR–6J), 77 West Jackson Blvd.; Chicago, IL 60604, (312) 886–1843, *cibulskis.karen@epa.gov.*

SUPPLEMENTARY INFORMATION: In the ''Rules and Regulations'' section of today's **Federal Register**, we are publishing a direct final notice of Partial Deletion of two parcels of the Tar Lake Superfund Site from the NPL, the non-ETA part of PIN 05–129–006–00 (41.4 acres) and the non-ETA part of PIN 05–11–129–007–00 (33.63 acres), without prior notice of intent to delete because we view this as a noncontroversial revision and anticipate no adverse comments. We have explained our reasons for these partial deletions in the preamble to the direct final notice of Partial Deletion, and those reasons are incorporated herein. If we receive no adverse comments on this partial deletion action, we will not take further action on this Notice of Intent To Delete for these two parcels. If we receive adverse comments, we will withdraw the direct final Notice of Partial Deletion of these parcels, and it will not take effect. We will, as appropriate, address all public comments in a subsequent final Notice of Partial Deletion regarding these parcels, based on this Notice of Intent To Delete. We will not institute a second comment period on this Notice of Intent To Delete. Any parties interested in commenting must do so at this time.

For additional information, see the direct final Notice of Partial Deletion regarding these parcels which is located in the Rules and Regulations section of this **Federal Register**.

List of Subjects in 40 CFR Part 300

Environmental protection, Air pollution control, Chemicals, Hazardous waste, Hazardous substances, Intergovernmental relations, Penalties, Reporting and recordkeeping requirements, Superfund, Water pollution control, Water supply.

Authority: 33 U.S.C. 1321(c)(2); 42 U.S.C. 9601–9657; E.O. 12777, 56 FR 54757, 3 CFR, 1991 Comp., p. 351; E.O. 12580, 52 FR 2923; 3 CFR, 1987 Comp., p. 193.

Dated: October 24, 2011.

Susan Hedman,

Regional Administrator, Region 5.

[FR Doc. 2011–29070 Filed 11–9–11; 8:45 am]

BILLING CODE 6560–50–P

DEPARTMENT OF DEFENSE

Defense Acquisition Regulations System

48 CFR Parts 204 and 252

RIN 0750–AG47

Defense Federal Acquisition Regulation Supplement; Safeguarding Unclassified DoD Information (DFARS Case 2011–D039)

AGENCY: Defense Acquisition Regulations System, Department of Defense (DoD).

ACTION: Notice of meeting cancellation.

SUMMARY: On October 28, 2011 (76 FR 66889), DoD gave notice of a public meeting to be held on November 15, 2011, from 9:30 a.m. to 12 p.m. EST at the General Services Administration (GSA), Central Office Auditorium. This meeting has been cancelled and may be rescheduled at a later date after review and evaluation of public comments received. Public comments should still be submitted by December 16, 2011 using one of the methods discussed under the section below titled **ADDRESSES**.

DATES: *Submission of Comments:* Comments on the proposed rule should be submitted in writing to the address shown below on or before December 16, 2011, to be considered in the formation of the rule.

ADDRESSES: *Submission of Comments:* You may submit written comments, identified by DFARS Case 2011–D039, using any of the following methods:

- *Regulations.gov: http://www.regulations.gov.* Submit comments via the Federal eRulemaking portal by inputting ''DFARS Case 2011–D039'' under the heading ''Enter keyword or ID'' and selecting ''Search.'' Select the link ''Submit a Comment'' that corresponds with ''DFARS Case 2011–D039.'' Follow the instructions provided at the ''Submit a Comment'' screen. Please include your name, company name (if any), and ''DFARS Case 2011–D039'' on your attached document.
- *Email: dfars@osd.mil.* Include DFARS Case 2011–D039 in the subject line of the message.
- *Fax:* (703) 602–0350.
- *Mail:* Defense Acquisition Regulations System, Attn: Mr. Julian Thrash, OUSD (AT&L) DPAP (DARS), Room 3B855, 3060 Defense Pentagon, Washington, DC 20301–3060.

Comments received generally will be posted without change to *http://www.regulations.gov,* including any personal information provided. To confirm receipt of your comment, please check *http://www.regulations.gov* approximately two to three days after submission to verify posting (except allow 30 days for posting of comments submitted by mail).

FOR FURTHER INFORMATION CONTACT: Mr. Julian E. Thrash, telephone (703) 602–0310.

List of Subjects in 48 CFR Parts 204 and 252

Government procurement.

Mary Overstreet,

Editor, Defense Acquisition Regulations System.

[FR Doc. 2011–29132 Filed 11–9–11; 8:45 am]

BILLING CODE 5001–06–P

Notices

Federal Register

Vol. 76, No. 218

Thursday, November 10, 2011

This section of the FEDERAL REGISTER contains documents other than rules or proposed rules that are applicable to the public. Notices of hearings and investigations, committee meetings, agency decisions and rulings, delegations of authority, filing of petitions and applications and agency statements of organization and functions are examples of documents appearing in this section.

DEPARTMENT OF AGRICULTURE

Submission for OMB Review; Comment Request

November 4, 2011.

The Department of Agriculture has submitted the following information collection requirement(s) to OMB for review and clearance under the Paperwork Reduction Act of 1995, Public Law 104–13. Comments regarding (a) whether the collection of information is necessary for the proper performance of the functions of the agency, including whether the information will have practical utility; (b) the accuracy of the agency's estimate of burden including the validity of the methodology and assumptions used; (c) ways to enhance the quality, utility and clarity of the information to be collected; (d) ways to minimize the burden of the collection of information on those who are to respond, including through the use of appropriate automated, electronic, mechanical, or other technological collection techniques or other forms of information technology should be addressed to: Desk Officer for Agriculture, Office of Information and Regulatory Affairs, Office of Management and Budget (OMB), *OIRA_Submission@OMB.EOP.GOV* or fax (202) 395–5806 and to Departmental Clearance Office, USDA, OCIO, Mail Stop 7602, Washington, DC 20250–7602. Comments regarding these information collections are best assured of having their full effect if received within 30 days of this notification. Copies of the submission(s) may be obtained by calling (202) 720–8958.

An agency may not conduct or sponsor a collection of information unless the collection of information displays a currently valid OMB control number and the agency informs potential persons who are to respond to the collection of information that such persons are not required to respond to the collection of information unless it displays a currently valid OMB control number.

Animal & Plant Health Inspection Service

Title: Importation of Poultry Meat and Other Poultry Products from Sinaloa and Sonora, Mexico.

OMB Control Number: 0579–0144.

Summary Of Collection: The Animal Health Protection Act of 2002 (Title X, Subtitle E, Sec. 10401–18 of Pub. L. 107–171) is the primary Federal law governing the protection of animal health. Veterinary Services, a program within USDA's Animal and Plant Health Inspection Service (APHIS), is responsible for administering regulations intended to prevent the introduction of animal diseases, such as exotic Newcastle disease (END) into the United States. APHIS currently has regulations in place that restrict the importation of poultry meat and other poultry products from Mexico due to the presence of exotic Newcastle disease in the country. However, APHIS does allow the importation of poultry meat and poultry products from the Mexican States of Sinaloa and Sonora because APHIS has determined that poultry meat and products from these two Mexican States pose a negligible risk of introducing exotic Newcastle disease into the United States. To ensure that these items are safe for importation, APHIS requires that certain data appear on the foreign meat inspection certificate that accompanies the poultry meat and other poultry products from Sinaloa and Sonora to the United States. APHIS also requires that serial numbered seals be applied to containers carrying the poultry meat and other poultry products.

Need and Use of the Information: APHIS will collect information to certify that the poultry meat or other poultry products were (1) derived from poultry born and raised in commercial breeding establishments in Sinaloa and Sonora; (2) derived from poultry that were slaughtered in Sinaloa or Sonora in a Federally-inspected slaughter plant approved to export these commodities to the United States in accordance with Food Safety & Inspection regulations; (3) processed at a Federally inspected processing plant in Sinaloa or Sonora; and (4) kept out of contact with poultry from any other State within Mexico. APHIS will also collect information to ensure that the poultry meat or poultry products from Sinaloa and Sonora pose the most negligible risk possible for introducing exotic Newcastle disease into the United States.

Description of Respondents: Business or other for-profit; Federal Government.

Number of Respondents: 280.

Frequency of Responses: Reporting: On occasion.

Total Burden Hours: 280.

Animal and Plant Health Inspection Service

Title: Foot-and-Mouth Disease; Prohibition on Importation of Farm Equipment.

OMB Control Number: 0579–0195.

Summary of Collection: The Animal Health Protection Act of 2002 is the primary Federal law governing the protection of animal health. Regulations contained in 9 CFR chapter 1, subchapter D, parts 92 through 98 prohibits the importation of used farm equipment into the United States from regions in which foot-and-mouth disease or rinderpest exist, unless the equipment has been stream-cleaned prior to export to the United States so that it is free of exposed dirt and other particulate matter. Disease prevention is the most effective method for maintaining a healthy animal population and enhancing the Animal and Plant Health Inspection Service (APHIS) ability to compete in exporting animals and animal products.

Need and Use of the Information: APHIS will collect information through the use of a certification statement completed by the farm equipment exporter and signed by an authorized official of the national animal health service of the region of origin, stating that the steam-cleaning of the equipment has been done. This is necessary to help prevent the introduction of food-and-mouth disease into the United States. If the information were not collected APHIS would be forced to discontinue the importation of any used farm equipment from FMD regions, a development that could have a damaging financial impact on exporters and importers of this equipment.

Description of Respondents: Business or other for-profit; State, Local or Tribal Government.

Number of Respondents: 150.

Frequency of Responses: Reporting: On occasion.

Total Burden Hours: 200.

Animal Plant and Health Inspection Service

Title: Interstate Movement of Sheep and Goats.

OMB Control Number: 0579–0258.

Summary of Collection: The Animal Health Protection Act (AHPA) of 2002 is the primary Federal law governing the protection of animal health. The law gives the Secretary of Agriculture broad authority to detect, control, or eradicate pests or diseases of livestock or poultry. Disease prevention is the most effective method for maintaining a healthy animal population and enhancing the ability of the Animal and Plant Health Inspection Service (APHIS) to help U.S. producers compete in the world market of animal and animal product trade. The Veterinary Services (VS) program of APHIS is the unit responsible for carrying out the disease prevention mission. One of the APHIS disease eradication programs addresses scrapie. Scrapie is a progressive, degenerative, and eventually fatal disease affecting the central nervous system of sheep and goats.

Need and Use of the Information: In order for APHIS' scrapie eradication program to be effective, its animal identification, recordkeeping, and other requirements must be carried out at livestock facilities that handle sheep and goats moving in interstate commerce. The individual legally responsible for the day-to-day operation of the facility must execute an Approval of Livestock Facilities Agreement with APHIS. The information restricts the interstate movement of livestock within the United States to control diseases of concern and approve livestock facilities that handle sheep and goats moving in interstate commerce.

Description of Respondents: Business or other for-profit; State, Local or Tribal Government.

Number of Respondents: 200.

Frequency of Responses: Recordkeeping; Reporting: On occasion.

Total Burden Hours: 237.

Charlene Parker,

Departmental Information Collection Clearance Officer.

[FR Doc. 2011–29093 Filed 11–9–11; 8:45 am]

BILLING CODE 3410–34–P

DEPARTMENT OF AGRICULTURE

National Agricultural Statistics Service

Notice of Intent To Request Approval To Revise and Extend an Information Collection

AGENCY: National Agricultural Statistics Service, USDA.

ACTION: Notice and request for comments.

SUMMARY: In accordance with the Paperwork Reduction Act of 1995, this notice announces the intention of the National Agricultural Statistics Service (NASS) to request approval to revise and extend a currently approved information collection, the Milk and Milk Products Surveys. Revision to burden hours will be needed due to changes in the size of the target population, sample design, and/or questionnaire length.

DATES: Comments on this notice must be received by January 9, 2012 to be assured of consideration.

ADDRESSES: You may submit comments, identified by docket number 0535–0020, by any of the following methods:

- *Email: ombofficer@nass.usda.gov.* Include docket number above in the subject line of the message.
- *Fax:* (202) 720–6396.
- *Mail:* Mail any paper, disk, or CD–ROM submissions to: David Hancock, NASS Clearance Officer, U.S. Department of Agriculture, Room 5336 South Building, 1400 Independence Avenue SW., Washington, DC 20250–2024.
- *Hand Delivery/Courier:* Hand deliver to: David Hancock, NASS Clearance Officer, U.S. Department of Agriculture, Room 5336 South Building, 1400 Independence Avenue SW., Washington, DC 20250–2024.

FOR FURTHER INFORMATION CONTACT: Joseph T. Reilly, Associate Administrator, National Agricultural Statistics Service, U.S. Department of Agriculture, (202) 720–4333.

SUPPLEMENTARY INFORMATION: *Title:* Milk and Milk Products Surveys.

OMB Control Number: 0535–0020.

Expiration Date of Approval: March 31, 2012.

Type of Request: To revise and extend a currently approved information collection for a period of three years.

Abstract: The primary objective of the National Agricultural Statistics Service (NASS) is to collect, prepare and issue State and national estimates of crop and livestock production, prices and disposition as well as economic statistics, farm numbers, land values, on-farm pesticide usage, pest crop management practices, as well as the Census of Agriculture. The Milk and Milk Products Surveys obtain basic agricultural statistics on milk production and manufactured dairy products from farmers and processing plants throughout the nation. Data are gathered for milk production, dairy products, evaporated and condensed milk, manufactured dry milk, and manufactured whey products. Milk production and manufactured dairy products statistics are used by the U.S. Department of Agriculture (USDA) to help administer Federal programs and by the dairy industry in planning, pricing, and projecting supplies of milk and milk products. Included in this approval request are several changes to this group of surveys. The monthly Milk Production Survey will now be conducted quarterly (January, April, July, and October) instead of monthly. Monthly estimates for the non-quarterly months will still be published for total number of dairy cows, the number of cows milked, and the total milk produced. Estimates for the non-survey months will be generated by using a combination of administrative data, regression modeling, and historic data. In the spring of 2012 NASS also plans to discontinue the collection of Dairy Product Prices. This data will be collected by the Agricultural Marketing Service (AMS) in compliance with the Mandatory Price Reporting Act of 2010, and the amended section 273(d) of the Agricultural Marketing Act of 1946.

Authority: Voluntary dairy information reporting is conducted under authority of 7 U.S.C. 2204(a). Individually identifiable data collected under this authority are governed by section 1770 of the Food Security Act of 1985 (7 U.S.C. 2276), which requires USDA to afford strict confidentiality to non-aggregated data provided by respondents.

Mandatory dairy product information reporting is based on the Agricultural Marketing Act of 1946, as amended by the Dairy Market Enhancement Act of 2000 and the Farm Security and Rural Development Act of 2002 (U.S.C. 1637–1637b). This program requires each manufacturer to report to USDA the price, quantity, and moisture content of dairy products sold and each entity storing dairy products to report information on the quantity of dairy products stored. Any manufacturer that processes, markets, or stores less than 1,000,000 pounds of dairy products per year is exempt. USDA is required to maintain information, statistics, or documents obtained under these Acts in a manner that ensures that confidentiality is preserved regarding

the identity of persons and proprietary business information, subject to verification by the Agricultural Marketing Service (AMS) under Public Law No. 106–532. This Notice is submitted in accordance with the Paperwork Reduction Act of 1995, Public Law 104–13 (44 U.S.C. 3501, *et seq.*) and Office of Management and Budget regulations at 5 CFR part 1320.

NASS also complies with OMB Implementation Guidance, ''Implementation Guidance for Title V of the E–Government Act, Confidential Information Protection and Statistical Efficiency Act of 2002 (CIPSEA),'' **Federal Register**, Vol. 72, No. 115, June 15, 2007, p. 33362.

Estimate of Burden: Public reporting burden for this collection of information is estimated to average 8 minutes per response. This average is based on the 12 different surveys in the information collection: 4 weekly, 2 monthly, 4 quarterly, and 2 annual. The estimated total number of responses is 64,500 annually, with an average annual frequency of 3.64 responses per respondent.

Respondents: Farms and businesses.

Estimated Number of Respondents: 15,000.

Estimated Total Annual Burden on Respondents: 8,350 hours.

Copies of this information collection and related instructions can be obtained without charge from NASS Clearance Officer, at (202) 720–2248 or at *ombofficer@nass.usda.gov*.

Comments: Comments are invited on: (a) Whether the proposed collection of information is necessary for the proper performance of the functions of the agency, including whether the information will have practical utility; (b) the accuracy of the agency's estimate of the burden of the proposed collection of information including the validity of the methodology and assumptions used; (c) ways to enhance the quality, utility, and clarity of the information to be collected; and (d) ways to minimize the burden of the collection of information on those who are to respond, through the use of appropriate automated, electronic, mechanical, technological or other forms of information technology collection methods.

All responses to this notice will become a matter of public record and be summarized in the request for OMB approval.

Signed at Washington, DC on October 4, 2011.

Joseph T. Reilly,

Associate Administrator.

[FR Doc. 2011–28886 Filed 11–9–11; 8:45 am]

BILLING CODE 3410–20–P

COMMISSION ON CIVIL RIGHTS

Agenda and Notice of Public Meeting of the Colorado Advisory Committee

Notice is hereby given, pursuant to the provisions of the rules and regulations of the U.S. Commission on Civil Rights (Commission), and the Federal Advisory Committee Act (FACA), that a planning meeting of the Colorado Advisory Committee to the Commission will convene by teleconference at 10 a.m. (MDT) on Tuesday, November 22, 2011. The purpose of the meeting is to discuss next steps after project selection.

This meeting is available to the public through the following toll-free call-in number: (800) 516–9896. Conference ID: 8334. Any interested member of the public may call this number and listen to the meeting. Callers can expect to incur charges for calls they initiate over wireless lines, and the Commission will not refund any incurred charges. Callers will incur no charge for calls they initiate over land-line connections to the toll-free telephone number. Persons with hearing impairments may also follow the proceedings by first dialing Dial 711 for relay services and enter 1–(800) 516–9896, followed by Conference ID: 8334. To ensure that the Commission secures an appropriate number of telephone lines for the public, persons are asked to contact the Rocky Mountain Regional Office 10 days before the meeting date either by email at *ebohor@usccr.gov,* or by phone at (303) 866–1040.

Members of the public are entitled to submit written comments; the comments must be received in the regional office by December 22, 2011. Comments may be mailed to the Rocky Mountain Regional Office, U.S. Commission on Civil Rights, 999–18th Street, Suite 1380 South, Denver, CO 80202, faxed to (303) 866–1050, or emailed to *ebohor@usccr.gov*. Persons who desire additional information may contact the Rocky Mountain Regional Office by email at *ebohor@usccr.gov* or by phone at (303) 866–1040.

Records generated from this meeting may be inspected and reproduced at the Rocky Mountain Regional Office, as they become available, both before and after the meeting. Persons interested in the work of this advisory committee are directed to the Commission's Web site, *http://www.usccr.gov,* or may contact the Rocky Mountain Regional Office at the above email or street address.

The meeting will be conducted pursuant to the rules and regulations of the Commission and FACA.

Dated in Washington, DC, on November 4, 2011.

Peter Minarik,

Acting Chief, Regional Programs Coordination Unit.

[FR Doc. 2011–29115 Filed 11–9–11; 8:45 am]

BILLING CODE 6335–01–P

DEPARTMENT OF COMMERCE

Submission for OMB Review; Comment Request

The Department of Commerce will submit to the Office of Management and Budget (OMB) for clearance the following proposal for collection of information under the provisions of the Paperwork Reduction Act (44 U.S.C. chapter 35).

Agency: National Institute of Standards and Technology (NIST).

Title: Evacuation Movement and Behavior Questionnaire.

OMB Control Number: 0693–0051.

Type of Request: Regular.

Burden Hours: 3,334.

Number of Respondents: 20,000.

Average Hours per Response: 10 minutes.

Needs and Uses: The NIST's Engineering Laboratory, formally the Building and Fire Research Laboratory, has established project efforts to better understand occupant egress from high-rise buildings. Buildings of interest include varying heights, and of varying occupancy types, *e.g.,* residential, office, and assembly occupancies. Data will be collected via questionnaires on occupant behavior during regularly scheduled evacuation drills from high-rise building across the United States. All of these evacuation drills will be conducted regardless of whether NIST data collection takes place. The occupant behavioral data requested will involve the occupants' knowledge of the procedure, their awareness of the event, and their behavior during the evacuation. This data will be used to improve egress designs for buildings, safety assessment models, and occupant training and education about what to do in an emergency.

Affected Public: Individuals or households (selected individuals who have evacuated high-rise buildings in cities across the U.S. during scheduled evacuation drills).

Frequency: Annually.

Respondent's Obligation: Voluntary.

OMB Desk Officer: Jasmeet Seehra, (202) 395–3123.

Copies of the above information collection proposal can be obtained by calling or writing Diana Hynek, Departmental Paperwork Clearance

Officer, (202) 482–0266, Department of Commerce, Room 6616, 14th and Constitution Avenue, NW., Washington, DC 20230 (or via the Internet at d*Hynek@doc.gov*).

Written comments and recommendations for the proposed information collection should be sent within 30 days of publication of this notice to Jasmeet Seehra, OMB Desk Officer, FAX number (202) 395–5167 or via the Internet at *Jasmeet_K._Seehra@omb.eop.gov.*

Dated: November 4, 2011.

Gwellnar Banks,

Management Analyst, Office of the Chief Information Officer.

[FR Doc. 2011–29101 Filed 11–9–11; 8:45 am]

BILLING CODE 3510–13–P

DEPARTMENT OF COMMERCE

Foreign-Trade Zones Board

[Docket 70–2011]

Foreign-Trade Zone 109—County of Jefferson, NY; Application for Reorganization and Expansion Under Alternative Site Framework

An application has been submitted to the Foreign-Trade Zones (FTZ) Board (the Board) by the County of Jefferson, grantee of FTZ 109, requesting authority to reorganize and expand the zone under the alternative site framework (ASF) adopted by the Board (74 FR 1170, 1/12/09 (correction 74 FR 3987, 1/22/09); 75 FR 71069–71070, 11/22/10). The ASF is an option for grantees for the establishment or reorganization of general-purpose zones and can permit significantly greater flexibility in the designation of new ''usage-driven'' FTZ sites for operators/users located within a grantee's ''service area'' in the context of the Board's standard 2,000-acre activation limit for a general-purpose zone project. The application was submitted pursuant to the Foreign-Trade Zones Act, as amended (19 U.S.C. 81a–81u), and the regulations of the Board (15 CFR part 400). It was formally filed on November 7, 2011.

FTZ 109 was approved by the Board on November 5, 1984 (Board Order 278, 49 FR 44937, 11/13/84).

The current zone project includes the following sites: *Site 1* (115 acres)—Jefferson County Industrial Park, junction of I–81 and Coffeen Street, Watertown; and, *Site 2* (16 acres)—Dexter Sulphite Mill, 349 Lakeview Dr. & Stockton Avenue, Dexter.

The grantee's proposed service area under the ASF would be the County of Jefferson, New York, as described in the application. If approved, the grantee would be able to serve sites throughout the service area based on companies' needs for FTZ designation. The proposed service area is within and adjacent to the Alexandria Bay Customs and Border Protection port of entry.

The applicant is requesting authority to reorganize and expand its existing zone project to include existing Site 1 as a ''magnet'' site and to remove existing Site 2. The applicant has also requested that Site 1 be expanded to include an additional 95 acres. In addition, the applicant is requesting approval of the following new ''magnet'' sites: Proposed Site 3 (122 acres), City Central Industrial Park, Bellew Avenue South, Watertown; and, Proposed Site 4 (1,059 acres) located at the Corporate Park at Watertown International Airport, NYS Route 12F, 22529 Airport Drive, Dexter.

The ASF allows for the possible exemption of one magnet site from the ''sunset'' time limits that generally apply to sites under the ASF, and the applicant proposes that Site 1 be so exempted. No usage-driven sites are being requested at this time. Because the ASF only pertains to establishing or reorganizing a general-purpose zone, the application would have no impact on FTZ 109's authorized subzone.

In accordance with the Board's regulations, Kathleen Boyce of the FTZ Staff is designated examiner to evaluate and analyze the facts and information presented in the application and case record and to report findings and recommendations to the Board.

Public comment is invited from interested parties. Submissions (original and 3 copies) shall be addressed to the Board's Executive Secretary at the address below. The closing period for their receipt is January 9, 2012. Rebuttal comments in response to material submitted during the foregoing period may be submitted during the subsequent 15-day period to January 24, 2012.

A copy of the application will be available for public inspection at the Office of the Executive Secretary, Foreign-Trade Zones Board, Room 2111, U.S. Department of Commerce, 1401 Constitution Avenue NW., Washington, DC 20230–0002, and in the ''Reading Room'' section of the Board's Web site, which is accessible via *www.trade.gov/ftz.* For further information, contact Kathleen Boyce at *Kathleen.Boyce@trade.gov* or (202) 482–1346.

Dated: November 7, 2011.

Andrew McGilvray,

Executive Secretary.

[FR Doc. 2011–29178 Filed 11–9–11; 8:45 am]

BILLING CODE P

DEPARTMENT OF COMMERCE

Bureau of Industry and Security

Proposed Information Collection; Comment Request; Miscellaneous Short Supply Activities

AGENCY: Bureau of Industry and Security, Commerce.

ACTION: Notice.

SUMMARY: The Department of Commerce, as part of its continuing effort to reduce paperwork and respondent burden, invites the general public and other Federal agencies to take this opportunity to comment on proposed and/or continuing information collections, as required by the Paperwork Reduction Act of 1995.

DATES: Written comments must be submitted on or before January 9, 2012.

ADDRESSES: Direct all written comments to Diana Hynek, Departmental Paperwork Clearance Officer, Department of Commerce, Room 6616, 14th and Constitution Avenue NW., Washington, DC 20230 (or via the Internet at *dHynek@doc.gov*).

FOR FURTHER INFORMATION CONTACT: Requests for additional information or copies of the information collection instrument and instructions should be directed to Larry Hall, BIS ICB Liaison, (202) 482–4895, *Lawrence.Hall@bis.doc.gov.*

SUPPLEMENTARY INFORMATION:

I. Abstract

This information collection is comprised of two rarely used short supply activities: ''Registration of U.S. Agricultural Commodities for Exemption from Short Supply Limitations on Export'' (USAG), and ''Petitions for the Imposition of Monitoring or Controls on Recyclable Metallic Materials (Petitions); Public Hearings.'' These activities are statutory in nature and, therefore, must remain a part of BIS's active information collections.

II. Method of Collection

Submitted electronically or on paper.

III. Data

OMB Control Number: 0694–0102.

Form Number(s): None.

Type of Review: Regular submission.

Affected Public: Business or other for-profit organizations.

Estimated Number of Respondents: 2.

Estimated Time per Response: USAG, 30 minutes; and Petitions, 100 hours.

Estimated Total Annual Burden Hours: 201.

Estimated Total Annual Cost to Public: $0.

IV. Request for Comments

Comments are invited on: (a) Whether the proposed collection of information is necessary for the proper performance of the functions of the agency, including whether the information shall have practical utility; (b) the accuracy of the agency's estimate of the burden (including hours and cost) of the proposed collection of information; (c) ways to enhance the quality, utility, and clarity of the information to be collected; and (d) ways to minimize the burden of the collection of information on respondents, including through the use of automated collection techniques or other forms of information technology.

Comments submitted in response to this notice will be summarized and/or included in the request for OMB approval of this information collection; they also will become a matter of public record.

Dated: November 4, 2011.

Gwellnar Banks,

Management Analyst, Office of the Chief Information Officer.

[FR Doc. 2011–29097 Filed 11–9–11; 8:45 am]

BILLING CODE 3510–33–P

DEPARTMENT OF COMMERCE

Bureau of Industry and Security

Proposed Information Collection; Comment Request; Request for Investigation Under Section 232 of the Trade Expansion Act

AGENCY: Bureau of Industry and Security, Commerce.

ACTION: Notice.

SUMMARY: The Department of Commerce, as part of its continuing effort to reduce paperwork and respondent burden, invites the general public and other Federal agencies to take this opportunity to comment on proposed and/or continuing information collections, as required by the Paperwork Reduction Act of 1995.

DATES: Written comments must be submitted on or before January 9, 2012.

ADDRESSES: Direct all written comments to Diana Hynek, Departmental Paperwork Clearance Officer, Department of Commerce, Room 6616, 14th and Constitution Avenue NW., Washington, DC 20230 (or via the Internet at *dHynek@doc.gov*).

FOR FURTHER INFORMATION CONTACT: Requests for additional information or copies of the information collection instrument and instructions should be directed to Larry Hall, BIS ICB Liaison, (202) 482–4895, *Lawrence.Hall@bis.doc.gov.*

SUPPLEMENTARY INFORMATION:

I. Abstract

Upon request, BIS will initiate an investigation to determine the effects of imports of specific commodities on the national security, and will make the findings known to the President for possible adjustments to imports through tariffs. The findings are made publicly available and are reported to Congress. The purpose of this collection is to account for the public burden associated with the surveys distributed to determine the impact on national security.

II. Method of Collection

Submitted electronically or on paper.

III. Data

OMB Control Number: 0694–0120.

Form Number(s): None.

Type of Review: Regular submission.

Affected Public: Business or other for-profit organizations.

Estimated Number of Respondents: 400.

Estimated Time per Response: 7 hours and 30 minutes.

Estimated Total Annual Burden Hours: 3,000.

Estimated Total Annual Cost to Public: $0.

IV. Request for Comments

Comments are invited on: (a) Whether the proposed collection of information is necessary for the proper performance of the functions of the agency, including whether the information shall have practical utility; (b) the accuracy of the agency's estimate of the burden (including hours and cost) of the proposed collection of information; (c) ways to enhance the quality, utility, and clarity of the information to be collected; and (d) ways to minimize the burden of the collection of information on respondents, including through the use of automated collection techniques or other forms of information technology.

Comments submitted in response to this notice will be summarized and/or included in the request for OMB approval of this information collection; they also will become a matter of public record.

Dated: November 4, 2011.

Gwellnar Banks,

Management Analyst, Office of the Chief Information Officer.

[FR Doc. 2011–29098 Filed 11–9–11; 8:45 am]

BILLING CODE 3510–33–P

DEPARTMENT OF COMMERCE

International Trade Administration

[A–552–801]

Certain Frozen Fish Fillets from the Socialist Republic of Vietnam: Extension of Deadline for Preliminary Results of the New Shipper Review

AGENCY: Import Administration, International Trade Administration, Department of Commerce.

DATES: *Effective Date:* November 10, 2011

FOR FURTHER INFORMATION CONTACT: Emeka Chukwudebe, AD/CVD Operations, Office 9, Import Administration, International Trade Administration, U.S. Department of Commerce, 14th Street and Constitution Avenue NW., Washington, DC 20230; telephone: (202) 482–0219.

Background

On August 12, 2003, the Department of Commerce (''Department'') published in the **Federal Register**, the antidumping duty order on certain frozen fish fillets from the Socialist Republic of Vietnam (''Vietnam'').[1] On March 31, 2011, the Department published a notice of initiation of a new shipper review with respect to Thuan An Production Trading & Services Co., Ltd. (''TAFISHCO'') covering the period August 1, 2010, through January 31, 2011.[2] On September 27, 2011, the Department published a notice of an extension of the time period for the preliminary results of this new shipper review by 45 days, to November 4, 2011.[3]

Extension of Time Limits for Preliminary Results

Section 751(a)(2)(B)(iv) of the Act and 19 CFR 351.214(i)(1), requires the Department to issue the preliminary results in a new shipper review of an antidumping duty order 180 days after the date on which the new shipper review was initiated. The Department may however, extend the deadline for completion of the preliminary results of a new shipper review to 300 days if it determines that the case is extraordinarily complicated. *See* 19 CFR 351.214(i)(2).

---

[1] *See Notice of Antidumping Duty Order: Certain Frozen Fish Fillets from the Socialist Republic of Vietnam,* 68 FR 47909 (August 12, 2003).

[2] *See Certain Frozen Fish Fillets From the Socialist Republic of Vietnam: Initiation of Antidumping Duty New Shipper Review,* 76 FR 17837 (March 31, 2011).

[3] *See Certain Frozen Fish Fillets From the Socialist Republic of Vietnam: Extension of Time Limit for Preliminary Results of the New Shipper Review,* 76 FR 59658 (September 27, 2011).

The Department determines that this new shipper review involves extraordinarily complicated methodological issues. Interested parties have submitted voluminous surrogate country comments and surrogate value data, and thus, the Department requires additional time to analyze these data. We are, therefore, further extending the time for the completion of the preliminary results of this new shipper review by 31 days to December 5, 2011. The final results continue to be due 90 days after the publication of the preliminary results.

This notice is published in accordance with sections 751(a)(2)(B)(iv) of the Act.

Dated: November 4, 2011.

Gary Taverman,

Acting Deputy Assistant Secretary for Antidumping and Countervailing Duty Operations.

[FR Doc. 2011–29172 Filed 11–9–11; 8:45 am]

BILLING CODE 3510–DS–P

DEPARTMENT OF COMMERCE

International Trade Administration

[A–570–851]

Certain Preserved Mushrooms From the People's Republic of China: Amended Final Results of Antidumping Duty Administrative Review

AGENCY: Import Administration, International Trade Administration, Department of Commerce.

DATES: *Effective Date:* November 10, 2011.

SUMMARY: On September 14, 2011, the Department of Commerce (the Department) published in the **Federal Register** the final results of administrative review of the antidumping duty order on certain preserved mushrooms from the People's Republic of China (PRC). *See Certain Preserved Mushrooms From the People's Republic of China: Final Results of Antidumping Duty Administrative Review and Rescission in Part,* 76 FR 56732 (September 14, 2011) (*Final Results*). The period of review is February 1, 2009, through January 31, 2010. We are amending our final results to correct a ministerial error.

FOR FURTHER INFORMATION CONTACT: Fred Baker, Scott Hoefke, or Robert James, AD/CVD Operations, Office 7, Import Administration, International Trade Administration, U.S. Department of Commerce, 14th Street and Constitution Avenue NW., Washington, DC 20230; telephone: (202) 482–2924, (202) 482–4947 or (202) 482–0649, respectively.

SUPPLEMENTARY INFORMATION:

Background

19 CFR 351.224(c)(2) states that a party to an antidumping duty proceeding must file comments concerning ministerial errors within five days after the earlier of the date on which the Secretary released documents to that party or held a disclosure meeting with that party. We released disclosure documents to Blue Field (Sichuan) Food Industrial Co., Ltd. (''Blue Field'') and Zhejiang Iceman Group, Co., Ltd. (''Iceman Group'') on September 7, 2011. On September 12, 2011, Blue Field filed a timely allegation of a ministerial error with the Department. On September 14, 2011, the Department released disclosure documents to Xiamen International Trade & Industrial Co., Ltd. (''XITIC''), thus establishing the deadline for XITIC's ministerial error comments as September 19, 2011. On September 19, 2011, XITIC and Iceman Group filed allegations of ministerial errors with the Department. On September 26, 2011, Monterey Mushrooms, Inc. (petitioner) filed rebuttal comments in response to the filings from XITIC and Iceman Group.

On October 5, 2011, the Department rejected from the record Iceman Group's September 19, 2011, submission because it was untimely given that the Department released all disclosure materials to it on September 7, 2011. On October 7, 2011, Iceman Group submitted a letter arguing that its September 19, 2011, submission was not untimely because, inter alia, it actually had not received all disclosure materials on September 7, 2011. Specifically, Iceman Group claimed that it had not received the computation of the rate for the separate-rate respondents. The Department subsequently determined that it had indeed failed to release to interested parties the computation of the rate for the separate-rate respondents. Therefore, on October 18, 2011, the Department released this computation to all interested parties and also invited Iceman Group to resubmit its September 19, 2011, submission.

No interested parties submitted ministerial error allegations with respect to the computation of the rate for the separate-rate respondents. Iceman Group resubmitted its ministerial error allegation on October 25, 2011.

Ministerial Errors

A ministerial error as defined in section 751(h) of the Tariff Act of 1930, as amended (''the Act''), includes ''errors in addition, subtraction, or other arithmetic function, clerical errors resulting from inaccurate copying, duplication, or the like, and any other type of unintentional error with the administering authority considers ministerial.'' [1] In this review, interested parties have alleged a total of four ministerial errors.

- Blue Field alleges that the Department erred in its normal value calculation by applying incorrect programming language regarding the cost of metal lids for tin can products.
- XITIC alleges that the Department erred in failing to value labor using the methodology announced in *Antidumping Methodologies in Proceedings Involving Non-Market Economics: Valuing the Factor of Production: Labor,* 76 FR 36092 (June 21, 2011).
- XITIC also alleges the Department used an incorrect surrogate value for its lime input.
- Iceman Group alleges the Department made a clerical error by including Iceman Group in the proceedings.

No interested party commented on Blue Field's allegation. After analyzing Blue Field's allegation, we find, in accordance with section 751(h) of the Act and 19 CFR 351.224(f), that the Department made a ministerial error in its normal value calculation by applying incorrect programming language regarding the cost of metal lids for tin can products.. Therefore, in accordance with section 751(h) of the Act and 19 CFR 351.224(e), we are amending the *Final Results* for Blue Field and the weighted-average margin for companies that applied for separate-rate status. For details, *see* Memorandum from Scott Hoefke to the File, Subject: ''Analysis of Data Submitted by Blue Field (Sichuan) Food Industrial Co., Ltd. (Blue Field) in the Amended Final Results of Administrative Review of the Antidumping Duty Order on Certain Preserved Mushrooms from the People's Republic of China,'' dated concurrently with this notice.

With respect to both of XITIC's allegations, petitioners argue that they constitute methodological issues, and not ministerial errors.

After analyzing the interested parties' allegations and reply comments regarding XITIC, we find, in accordance with section 751(h) of the Act, that the allegations made by XITIC challenge methodological determinations in the final results, rather than any clerical errors made in carrying out its intentions. XITIC cited no record

[1] *See also* 19 CFR 351.224(f).

evidence in its ministerial error allegation that it was the Department's intention in preparing the final results to use either the labor rate methodology announced on June 21, 2011, or to value lime using any surrogate value other than the one it used in the final results. Thus, XITIC's allegations do not fall under the definition of a ministerial error set forth in 751(h) of the Act and 19 CFR 351.224(f). Therefore, the Department has not amended the final results with respect to XITIC's allegations.

Finally, Iceman Group argues that the Department made a clerical error by including Iceman Group in the proceedings. Iceman Group claims that no party requested a review of Iceman Group, and that the Department did not initiate an administrative review of shipments by Iceman Group. Instead, Iceman Group argues, petitioners requested a review of Zhejiang Iceman Food, Co., Ltd. (''Iceman Food''), and it was on this entity that the Department initiated an administrative review.

Petitioner argues the Department should reject Iceman Group's argument for three reasons: (1) Iceman Group actively participated in the administrative proceedings before the Department (submitting a separate rate certification) and its counsel filed an entry of appearance on behalf of Iceman Food; (2) the Department's *Preliminary Results* [2] specifically identified Iceman Group as an entity preliminarily eligible for a separate rate; and (3) Iceman Group's attempt to raise this issue as a clerical error—rather than having raised it during the Department's on-going proceedings—is an inappropriate use of the clerical error provision in the Department's regulations.

After analyzing the interested parties' allegations and reply comments regarding Iceman Group, in accordance with section 751(h) of the Act and 19 CFR 351.224(e), we find that the Department did not err by including Iceman Group in the proceedings. First, the allegations made by Iceman Group do not fall under the definition of ''ministerial error'' set forth in 751(h) of the Act and 19 CFR 351.224(f). Additionally, four reasons support equating Iceman Group with the entity Iceman Food: (1) Counsel filed an entry of appearance on behalf of Iceman Food on April 5, 2010; (2) Iceman Group, which never filed a separate notice of appearance, filed a certification for a separate rate on April 29, 2010; (3) the separate rate certification filed by Iceman Group lists the company Web site as *www.icemanfood.com* and the company email address as ''*jacky@icemanfood.com;*'' and (4) Iceman Group did not comment on the *Preliminary Results,* which specifically list Iceman Group as preliminarily receiving a separate rate. Therefore, the Department correctly and reasonably assigned a separate rate to Iceman Group as a result of counsel's representation of Iceman Group and Iceman Food, and the party's own actions before the Department indicating that the two names apply to the same company which is subject to the review. Thus, the Department will not amend the *Final Results* for Iceman Group other than to account for adjustments to the weighted-average margin for companies that applied for separate-rates status as described above.

[2] *See Certain Preserved Mushrooms From the People's Republic of China: Preliminary Results of Antidumping Duty Administrative Review, Recission in Part, and Intent to Rescind in Part,* 76 FR 12704 (March 8, 2011) (*Preliminary Results*)

Amended Final Results of the Review

The Department has determined that the following amended margins exist for the period February 1, 2009, through January 31, 2010.

Exporter	Weighted-average margin (percent)
Blue Field (Sichuan) Food Industrial Co., Ltd	2.17
Ayecue (Liaocheng) Foodstuff Co., Ltd	76.12
Fujian Golden Banyan Foodstuffs Industrial Co., Ltd	76.12
Shandong Jiufa Edible Fungus Corporation, Ltd	76.12
Zheijiang Iceman Group Co., Ltd	76.12

Assessment Rates

Pursuant to section 751(a)(2)(A) of the Act and 19 CFR 351.212(b), the Department shall determine, and U.S. Customs and Border Protection (CBP) shall assess, antidumping duties on all appropriate entries. The Department intends to issue assessment instructions to CBP that are related to the amended final results 15 days after the of publication of the amended final results of review.

Cash Deposit Requirements

Cash deposit requirements related to the amended final results will be effective retroactively for all shipments of the subject merchandise entered, or withdrawn from warehouse, for consumption on or after the publication date of the final results, as provided by section 751(a)(2)(C) of the Act. The cash deposit rates for companies whose rate was corrected are noted above. For previously investigated or reviewed PRC and non-PRC exporters that have separate rates whose rate has not changed as a result of these amended final results, the cash deposit rate will continue to be the exporter-specific rate published for the most recent period. For all PRC exporters of subject merchandise which have not been found to be entitled to a separate rate, the cash deposit rate will be the PRC-wide rate of 198.63 percent. For all non-PRC exporters of subject merchandise which have not received their own rate, the cash deposit will be the rate applicable to the PRC exporters that supplied that non-PRC exporter. These deposit requirements shall remain in effect until further notice.

These amended final results are published in accordance with sections 751(h) and 777(i)(1) of the Act.

Dated: November 4, 2011.

Paul Piquado,

Assistant Secretary for Import Administration.

[FR Doc. 2011–29175 Filed 11–9–11; 8:45 am]

BILLING CODE 3510–DS–P

DEPARTMENT OF COMMERCE

International Trade Administration

Executive-Led Medical Trade Mission to India Mumbai, New Delhi and Hyderabad March 2–8, 2012

AGENCY: International Trade Administration, Commerce.

ACTION: Notice.

Mission Description

The United States Department of Commerce, International Trade Administration, U.S. and Foreign Commercial Service (CS) is organizing an Executive-Led Medical Trade Mission to India from March 2–8, 2012.

The Medical Trade Mission to India is intended to include representatives from a variety of U.S. medical/healthcare industry manufacturers (equipment/devices, laboratory equipments, emergency equipment, diagnostic, physiotherapy and orthopedic, healthcare information technology, and other allied sectors), service providers, and associations and trade organizations. The mission will introduce the participants to the government bodies, end-users and prospective partners whose needs and capabilities are best suited to each U.S. participant's strengths. Participating in an official U.S. industry delegation, rather than traveling to India on their own, will enhance the participants'

ability to secure meetings in India. The delegates will meet with government officials to obtain first-hand information about the regulations, policies and procedures in the healthcare industry. It will be an opportunity for participants to visit healthcare facilities to get acquainted with the functioning of hospitals in India and the varied standards. Market forces, such as medical tourism, insurance and corporate sector have accelerated the demand for quality in healthcare services. As a result, there is a growing demand from consumers for better healthcare as the lack of quality assurance mechanisms limits their access to appropriate health services. The Healthcare industry is now proactively creating standards for the medical tourism industry with the help of credit rating agencies, insurance companies and others involved in the self regulation of the sector. The National Accreditation Board for Hospitals (NABH) has been set-up to establish and operate accreditation programs for healthcare organizations. Some private hospitals are also applying for accreditation from bodies such as the Joint Commission International (JCI). The mission will include appointments and briefings in Mumbai, New Delhi and Hyderabad, India's major healthcare industry hubs. Trade mission participants will have the opportunity to interact extensively with Embassy/Consulate Officials and Commercial Service (CS) India healthcare specialists, to discuss industry developments, opportunities, and sales strategies.

There is an option in the mission to participate in Medical Fair India. The Medical Fair India is the 18th International Exhibition and Conference on Diagnostic, Medical Technology, Rehabilitation, Medical Equipment and Components. MEDICAL FAIR INDIA offers a new platform for technology and service solutions for use in the medical engineering industry—from new materials, components, intermediate products, packaging and services all the way over to more complex micro system technology and nanotechnology. For more information on Medical Fair India, please visit *http://www.medicalfair-india.com/.* For the last three years the U.S. Department of Commerce has certified the Medical Fair India.

Commercial Setting

The Indian healthcare industry is experiencing a rapid transformation and emerging to be a promising market for U.S. suppliers of high end products seeking partnership opportunities. The Indian healthcare industry is estimated at $50 billion industry in India and is expected to reach over $75 billion by 2012. There is a growing demand for quality healthcare service. The Indian population of 1 billion people is growing at a rate of 1.6 percent per year. The growth in affluence in India, which now has over 400 million middle-income consumers, is creating demand for a higher standard of healthcare. The type of healthcare serviced required have changed due to the change in the demographic profile of India and the rise of lifestyle-related diseases such as diabetes, cardiovascular diseases, and diseases of the central nervous system. The number of individuals covered by health plans is estimated at 20 million presently, leaving a large portion of the Indian population uninsured. The potential market for healthcare services, including healthcare information and management systems, is expected to grow at a faster pace as hospitals strive to improve operational efficiencies in managing patient records and other key systems.

Currently, the medical infrastructure in India is far from adequate with demand for hospitals and beds far surpassing availability. The problem is most acute in rural India, which accounts for over half of India's population; about 80 percent of available hospital beds are located in the urban centers, leaving only 20 percent for the larger rural population. Both the Indian government and the private sector are striving to bring about rapid growth in the industry to manage the increased demand for high quality service. Construction of several new hospitals as well as upgrades of existing hospitals is planned. Healthcare is provided through primary care facilities, secondary and tertiary care hospitals. While the first two categories are fully managed by the government, tertiary care hospitals are owned and managed either by government or private sector.

The growth in medical infrastructure is accompanied by increased demand for medical equipment/devices. The medical equipment segment is growing at an impressive rate of 15 percent. The demand for the medical equipment is expected to reach $5 billion by 2012, reflecting significant growth from the current figure of $2.7 billion. The new specialty and super-specialty hospital facilities depend on the import of high-end medical equipment, which accounts for over 65 percent of the entire healthcare market. The demand is primarily for high-tech devices. Most Indian healthcare institutes use foreign medical equipment for the purpose of diagnosis, treatment and surgery. The government has identified healthcare as a priority sector and has taken the following measures to promote this industry:

- 100 per cent foreign direct investment (FDI) is permitted for health and medical services under the automatic route. (FDI in sectors/activities to the extent permitted under automatic route does not require any prior approval either by the Government or Reserve Bank of India (RBI). The investors are only required to notify the Regional Office concerned of RBI within 30 days of receipt of inward remittances and file the required documents with that office within 30 days of issue of shares of foreign investors.
- The National Rural Health Mission (NRHM) has allocated US$ 10.15 billion for the up-grading and capacity enhancement of healthcare facilities.
- Moreover, in order to meet the revised cost of construction, in March 2010 the Government of India (GOI) allocated an additional US$ 1.2 billion for the construction of six All India Institute of Medical Sciences (AIIMS)-like institutes and up- grade of 13 existing Government Medical Colleges.

Medical tourism is one of the major external drivers of growth of the Indian healthcare sector. The cost of major surgeries in India remains relatively low. Government and private sector estimates the value of this segment of the industry will reach $1.5 billion by 2012. The healthcare industry is now proactively creating standards for the medical tourism industry with the help of credit rating agencies, insurance companies and others involved in the self regulation of the sector. The National Accreditation Board for Hospitals (NABH) has been set-up to establish and operate accreditation programs for healthcare organizations. Some private hospitals are also applying for accreditation from bodies such as the Joint Commission International (JCI).

The growth in this industry makes it very attractive for U.S. companies, both large companies already doing business in the market but also and especially small- and medium- sized enterprises (SMEs), and new-to-market (NTM) companies.

Mission Goals

The goal of the Medical Trade Mission to India is to (1) familiarize the participants with the current healthcare situation as well as the developments taking place in India (2) introduce participants to government officials in India to learn about various regulatory procedures and policies in the healthcare sector (3) introduce participants to Indian companies for potential partnerships.

Mission Scenario

The first stop on the mission itinerary is Mumbai, the financial capital of India, located in western India. New Delhi and Hyderabad are the second and third stops of the mission and are located in northern and western India. Several corporate hospital chains have their headquarters in these cities. These include Max group and Medicity Medanta in New Delhi, the Apollo group in Hyderabad, Fortis and the Tata Research in Mumbai.

In all three cities the delegates will attend Embassy and industry briefings, networking events and take part in business matchmaking appointments with private-sector organizations. As New Delhi is the capital city and home to Central (Federal) Government, the participants will have an opportunity in New Delhi to meet the representatives of the Ministry of Health, Drugs Controller Generals Office, and Department of Pharmaceutical. The U.S. mission members will learn about policies, procedures and opportunities in the country's healthcare industry.

These three cities are each regional hubs for the medical/healthcare industry. The end-users of the healthcare industry often prefer to be serviced by regional distributors/agents rather than country-wide distributors. Thus, medical equipment importers/distributors are based in these cities to supply and service the regions surrounding each of the cities. The three cities will serve as good locations for business one-on-one matchmaking meetings and networking.

U.S. participants will be counseled before and after the mission by U.S. Export Assistance Center trade specialists, primarily by members of the Global Healthcare Team. Participation in the mission will include the following:

- Pre-travel briefings/Webinar on subjects ranging from business practices in India to security;
- Embassy/Consulate briefings on the business climate, political scenario, medical/healthcare industry scenario;
- Industry briefings ''Doing business in India—focus sector medical/healthcare'';
- Pre-scheduled meetings with potential partners, distributors, end users, or local industry contacts in Mumbai, New Delhi and Hyderabad;
- Meetings with Indian Government officials in New Delhi;
- Tour of hospitals and interaction with senior hospital staff and procurement head (all the three stops); and
- Networking receptions in three cities of the trade mission.

Proposed Timetable

Mission participants will be encouraged to arrive Thursday, March 1, 2012 to allow time to adjust to their new surroundings before the mission program begins on Friday, March 2.

Friday, March 2	Mumbai. Morning: Consulate & Industry briefing by U.S. Department of Commerce at the hotel. Noon/Afternoon: Option I—Trade Mission. One-on-One business matchmaking appointments at the hotel. Lunch—private lunch. Option II—participate/exhibit in Medical Fair 2012 by Messe Dusseldorf. Evening: Networking reception at the hotel.
Saturday, March 3	Mumbai/New Delhi. Option I— Morning: One-on-One business matchmaking appointments at the hotel. Late afternoon: Check-out of the hotel & depart for Mumbai airport. Travel to New Delhi. Evening: Arrive New Delhi. Option II—participate/exhibit in Medical Fair 2012 by Messe Dusseldorf. Delegates in Option 2 depart for New Delhi on Sunday, March 4, 2011.
Sunday, March 4	New Delhi. Free day for the delegates in Option 1/Travel Day for the Delegates in Option II.
Monday, March 5	New Delhi. Morning: Breakfast briefing by the U.S. Commercial Service at hotel. Meetings with the Government of India Ministries. Lunch: Private lunch. Afternoon: One-on-one matchmaking meeting at the hotel Evening: Networking reception.
Tuesday, March 6	New Delhi/Hyderabad. Morning: One-on-one matchmaking meeting at the hotel. Lunch on own. Late afternoon: Check-out of the hotel & depart for New Delhi airport. Travel to Hyderabad. Evening: Arrive Hyderabad.
Wednesday, March 7	Hyderabad. Morning: One-on-One business matchmaking appointments at the hotel. Private lunch. Afternoon: One-on-One business matchmaking appointments at the hotel. Evening: Networking reception.
Thursday, March 8	Hyderabad. Hospital chain visit and meeting with senior management. Lunch on own. Evening: Check-out of the hotel. Depart for Hyderabad International airport for onward travel.

Participation Requirements

All parties interested in participating in the India Medical Trade Mission must complete and submit an application for consideration by the Department of Commerce. All applicants will be evaluated on their ability to meet certain conditions and best satisfy the selection criteria as outlined below. A minimum of 15 and a maximum of 20 companies will be selected to participate in the mission from the applicant pool. U.S. companies already doing business in India as well as U.S. companies seeking to enter the Indian market for the first may apply.

Fees and Expenses

After a company or organization has been selected to participate on the mission, a payment to the Department of Commerce in the form of a participation fee is required.

Option 1: The participation fee for the three city (Mumbai, New Delhi and Hyderabad) Trade Mission will be $4537.00 for a small or medium-sized enterprise (SME),* or trade organization, and $5225.00 for large firms. The fee for each additional firm representative (large firm or SME/trade organization) is $500.

Option 2: Fee, for participants joining the Trade Mission in two-cities (Delhi and Hyderabad) will be $3,275.00 for SMEs or trade organizations, and $3950.00 for large companies. The fee for each additional firm representative (large firm or SME/trade organization) is $500. Selecting option II * in Mumbai i.e. exhibiting in Medical Fair India * will be approximately $3547.00 for 9 sq.m. shell scheme space + $578.00 as registration fees (this will be billed in Euros).

(* Fee for participating in the Medical Fair 2012 is separate and will have to be paid directly to the organizers Messe Dusseldorf.)

Expenses for lodging, some meals, incidentals, and travel (except for transportation to and from meetings) will be the responsibility of each mission participant.

Conditions for Participation

- An applicant must submit a completed and signed mission application and supplemental application materials, including adequate information on the company's products and/or services (or in the case of a trade association or trade organization, information on the products and/or services of the companies to be represented on the trade mission), primary market objectives, and goals for participation. If the Department of Commerce receives an incomplete application, the Department may reject the application, request additional information, or take the lack of information into account when evaluating the applications.
- Each applicant must also certify that the products and services it seeks to export through the mission are either produced in the United States, or, if not, marketed under the name of a U.S. firm and have at least fifty-one percent U.S. content. In the case of a trade association or trade organization, the applicant must certify that, for each company to be represented by the trade association or trade organization, the products and services the represented company seeks to export are either produced in the United States, or, if not, marketed under the name of a U.S. firm and have at least fifty-one percent U.S. content.

Selection Criteria for Participation

Selection will be based on the following criteria:

- Suitability of a company's (or, the case of a trade association or trade organization, representing companies') products or services to the mission's goals.
- Company's (or, in the case of a trade association or trade organization, represented companies') potential for business in India, including likelihood of exports resulting from the trade mission.
- Consistency of the applicant's goals and objectives with the stated scope of the trade mission.

Referrals from political organizations and any documents containing references to partisan political activities (including political contributions) will be removed from an applicant's submission and not considered during the selection process.

Timeframe for Recruitment and Applications

Mission recruitment will be conducted in an open and public manner, including publication in the **Federal Register** (*http://www.gpoaccess.gov/fr*), posting on ITA's trade mission calendar—*www.trade.gov/trade-missions*—and other Internet Web sites, press releases to general and trade media, direct mail, broadcast fax, notices by industry trade associations and other multiplier groups, and publicity at industry meetings, symposia, conferences, and trade shows.

Recruitment for the mission will begin immediately and conclude no later than December 22, 2011. The U.S. Department of Commerce will review applications and make selection decisions on a rolling basis. We will inform all applicants of selection decisions as soon as possible after the applications are reviewed. Applications received after the December 22 deadline will be considered only if space and scheduling constraints permit.

Contacts

U.S. Commercial Service

Ms. September Secrist, *Healthcare Team:* International Trade Specialist, U.S. Commercial Service, U.S. Department of Commerce, 2001 6th Avenue, Suite 2610, Seattle, WA 98121, Phone: (206) 553–5615x229, Fax: (206) 553–7253.

U.S. Commercial Service in India

Ms. Ruma Chatterjee, U.S. Commercial Service Mumbai, Ph: 91–22–2265 2511, Fax: 91–22–22652850, *Ruma.Chatterjee@trade.gov*.

Mr. Sandeep Maini, U.S. Commercial Service New Delhi, Ph: 91–11–23472222, Fax: 91–11–2331 5172, *Sandeep.Maini@trade.gov*.

Elnora Moye,

Trade Program Assistant.

[FR Doc. 2011–28590 Filed 11–9–11; 8:45 am]

BILLING CODE 3510–FP–P

* An SME is defined as a firm with 500 or fewer employees or that otherwise qualifies as a small business under SBA regulations (see *http://www.sba.gov/category/navigation-structure/contracting/contracting-officials/size-standards*). Parent companies, affiliates, and subsidiaries will be considered when determining business size. The dual pricing schedule reflects the Commercial Service's user fee schedule that became effective May 1, 2008 (for additional information see *http://www.export.gov/newsletter/march2008/initiatives.html*).

DEPARTMENT OF COMMERCE

National Oceanic and Atmospheric Administration (NOAA)

National Climate Assessment and Development Advisory Committee (NCADAC)

AGENCY: Office of Oceanic and Atmospheric Research (OAR), National Oceanic and Atmospheric Administration (NOAA), Department of Commerce (DOC).

ACTION: Notice of time changes for public meeting and public comment period.

SUMMARY: The National Climate Assessment and Development Advisory Committee (NCADAC) was established by the Secretary of Commerce under the authority of the Global Change Research Act of 1990 to synthesize and summarize the science and information

pertaining to current and future impacts of climate.

Time and Date: The meeting will be held November 16 from 8:30 a.m. to 3 p.m. and November 17, 2011, from 9 a.m. to 3 p.m. These times are subject to change. Please refer to the Web page *http://www.nesdis.noaa.gov/NCADAC/index.html* for changes and for the most up-to-date meeting agenda.

Federal Register Citation of Previous Announcement 76 65183

Date and Time of Previously Announced Meeting: November 16–17, 2011, at the following times: November 16, 2011, from 9 a.m. to 5 p.m.; November 17, 2011, from 9 a.m. to 3 p.m. Public comment period November 16, 2011 at 5 p.m.

Place: The meeting will be held at the NOAA Earth System Research Laboratory—David Skaggs Research Center (DSRC), 325 Broadway, Boulder, CO 80305–3337. Please check the Web site *http://www.nesdis.noaa.gov/NCADAC/index.html* for confirmation of the venue and for directions.

Status: Seating will be available on a first come, first serve basis. Members of the public must RSVP in order to attend all or a portion of the meeting by contacting the NCADAC DFO (*Cynthia.Decker@noaa.gov*) by November 1, 2011. The meeting will be open to public participation with a 30 minute public comment period on November 16 at 3:30 p.m. (check Web site to confirm time). The NCADAC expects that public statements presented at its meetings will not be repetitive of previously submitted verbal or written statements. In general, each individual or group making a verbal presentation will be limited to a total time of five (5) minutes. Individuals or groups planning to make a verbal presentation should contact the NCADAC DFO (*Cynthia.Decker@noaa.gov*) by November 10, 2011 to schedule their presentation. Written comments should be received in the NCADAC DFO's Office by November 10, 2011 to provide sufficient time for NCADAC review. Written comments received by the NCADAC DFO after November 10, 2011 will be distributed to the NCADAC, but may not be reviewed prior to the meeting date.

Special Accommodations: These meetings are physically accessible to people with disabilities. Requests for sign language interpretation or other auxiliary aids should be directed to Dr. Cynthia Decker (301) 563–6162, (*Cynthia.decker@noaa.gov*) by November 1, 2011.

FOR FURTHER INFORMATION CONTACT: Dr. Cynthia Decker, Designated Federal Official, National Climate Assessment and Development Advisory Committee, NOAA OAR, R/SAB, 1315 East-West Highway, Silver Spring, Maryland 20910. (Phone: (301) 734–1156, Fax: (301) 713–1459, Email: *Cynthia.Decker@noaa.gov*; or visit the NCADAC Web site at *http://www.nesdis.noaa.gov/NCADAC/index.html*.

SUPPLEMENTARY INFORMATION: A ''world café'' engagement exercise will be demonstrated from 3:30—5:30 p.m. on November 16, 2011 at the same location as the meeting. The public is welcome to attend this event.

Dated: November 4, 2011.

Mark E. Brown,

Chief Financial Officer/Chief Administrative Officer, Office of Oceanic and Atmospheric Research, National Oceanic and Atmospheric Administration.

[FR Doc. 2011–29091 Filed 11–9–11; 8:45 am]

BILLING CODE 3510–KD–P

CONSUMER PRODUCT SAFETY COMMISSION

Sunshine Act Meeting

TIME AND DATE: Wednesday, November 16, 2011; 10 a.m.–11 a.m.

PLACE: Hearing Room 420, Bethesda Towers, 4330 East West Highway, Bethesda, Maryland.

STATUS: Closed to the Public.

Matter To Be Considered

Compliance Status Report

The Commission staff will brief the Commission on the status of compliance matters.

For a recorded message containing the latest agenda information, call (301) 504–7948.

CONTACT PERSON FOR MORE INFORMATION: Todd A. Stevenson, Office of the Secretary, U.S. Consumer Product Safety Commission, 4330 East West Highway, Bethesda, MD 20814, (301) 504–7923.

Dated: November 8, 2011.

Todd A Stevenson,

Secretary.

[FR Doc. 2011–29325 Filed 11–8–11; 4:15 pm]

BILLING CODE 6355–01–P

DEPARTMENT OF DEFENSE

Office of the Secretary

Notice of Intent To Grant an Exclusive License; Voltage Networking, LLC

AGENCY: National Security Agency, Department of Defense (DoD).

ACTION: Notice.

SUMMARY: The National Security Agency hereby gives notice of its intent to grant Voltage Networking, LLC a revocable, non-assignable, exclusive, license to practice the following Government-Owned inventions as described in the following: Patent No. 6,835,581 entitled ''Method of coating optical device facets with dielectric layer and device made therefrom''; Patent No. 6,541,288 entitled ''Method of determining semiconductor laser facet reflectivity after facet reflectance modification''; Patent No. 6,760,350 entitled ''Method for measuring gain of photonic inverters''; Patent No. 7,010,187 entitled ''Mode transition-discrimination photonic logic device''; Patent No. 7,599,594 entitled ''Method of fabricating waveguide using sacrificial spacer layer''; Patent No. 7,442,577 entitled ''Method of fabricating a patterned device using sacrificial spacer layer''; Patent No. 7,678,593 entitled ''Method of fabricating optical device using multiple sacrificial spacer layers''; Patent No. 7,611,914 entitled ''Method of fabricating turning mirror using sacrificial spacer layer and device made therefrom''; Patent No. 7,833,828 entitled ''Method of fabricating a patterned device using sacrificial spacer layer''; Patent No. 7,595,221 entitled ''Method of fabricating a patterned device using sacrificial spacer layer''; Patent No. 7,531,382 entitled ''Method of fabricating a patterned device using sacrificial spacer layer''; Patent No. 7,700,387 entitled ''Method of fabricating optical device using multiple sacrificial spacer layers''; Patent No. 7,700,391 entitled ''Method of fabricating optical device using multiple sacrificial spacer layers''; Patent No. 7,741,136 entitled ''Method of fabricating turning mirror using sacrificial spacer layer and device made therefrom''; Patent No. 7,838,867 entitled ''Method of fabricating turning mirror using sacrificial spacer layer and device made therefrom''; and Patent No. 7,838,866 entitled ''Method of fabricating turning mirror using sacrificial spacer layer and device made therefrom.''

The above-mentioned inventions are assigned to the United States

Government as represented by the National Security Agency.

DATES: Anyone wishing to object to the grant of this license has fifteen (15) days from the date of publication of this notice to file written objections along with any supporting evidence, if any.

ADDRESSES: Written objections are to be filed with the National Security Agency Technology Transfer Program, 9800 Savage Road, Suite 6541, Fort George G. Meade, MD 20755–6541.

FOR FURTHER INFORMATION CONTACT: Marian T. Roche, Director, Technology Transfer Program, 9800 Savage Road, Suite 6541, Fort George G. Meade, MD 20755–6541, telephone (443) 479–9569.

Dated: November 4, 2011.

Aaron Siegel,

Alternate OSD Federal Register Liaison Officer, Department of Defense.

[FR Doc. 2011–29064 Filed 11–9–11; 8:45 am]

BILLING CODE 5001–06–P

DEPARTMENT OF DEFENSE

Department of the Navy

Notice of Public Meetings for the Draft Environmental Impact Statement for Basing of MV–22 and H–1 Aircraft in Support of III Marine Expeditionary Force Elements in Hawaii

AGENCY: Department of the Navy, DoD.

ACTION: Notice.

SUMMARY: Pursuant to Section (102)(2)(c) of the National Environmental Policy Act (NEPA) of 1969, and regulations implemented by the Council on Environmental Quality (40 Code of Federal Regulations [CFR] Parts 1500–1508), Department of Navy (DoN) NEPA regulations (32 CFR part 775), and U.S. Marine Corps (USMC) NEPA directives (Marine Corps Order P5090.2A, change 2), DoN has prepared and filed with the U.S. Environmental Protection Agency a Draft Environmental Impact Statement (DEIS) that evaluates the potential environmental consequences that may result from the basing of Osprey tiltrotor (MV–22) and Cobra and Huey attack and utility (H–1) aircraft in support of III Marine Expeditionary Force (MEF) elements in Hawaii. The Department of the Army (DoA) is a cooperating agency for this DEIS because the proposed squadrons would train on land currently owned or controlled by the DoA.

With the filing of the DEIS, the DoN is initiating a 45-day public comment period and has scheduled five public comment meetings to receive oral and written comments on the DEIS. Federal, state and local agencies and interested parties are encouraged to provide comments in person at any of the public comment meetings, or in writing anytime during the public comment period. This Notice announces the dates and locations of the public meetings and provides supplementary information about the environmental planning effort.

Per 36 CFR part 800.8, the DoN is integrating the NEPA and National Historic Preservation Act (NHPA) public involvement processes. In addition to meeting NEPA public involvement requirements, the public meetings will provide opportunities for NHPA Section 106 input regarding the identification and treatment of historic properties.

DATES: The DEIS will be distributed to Federal, State, and local agencies, elected officials, and other interested parties on November 10, 2011, initiating the public comment period, which will end on December 27, 2011. Each of the five public meetings will have specific times set aside for NHPA Section 106 public involvement and an informational open house. USMC and DoN representatives will be available to clarify information related to the DEIS. The public comment meetings will be held on the dates and at the times and locations indicated below:

1. Wednesday, November 30, 2011, Waimea Elementary School Cafeteria, 67–1225 Mamalahoa Hwy, Kamuela, HI, 5:30–6:30 p.m.: NHPA Section 106 input, 6:30–8:30 p.m.: Open house.
2. Thursday, December 1, 2011, Hilo Intermediate School Cafeteria, 587 Waianuenue Avenue, Hilo, HI, 4:30–5:30 p.m.: NHPA Section 106 input, 5:30–7:30 p.m.: Open house.
3. Tuesday, December 6, 2011, Mililani Middle School Cafeteria, 95–1140 Lehiwa Drive, Mililani, HI, 5:30–6:30 p.m.: NHPA Section 106 input, 6:30–8:30 p.m.: Open house.
4. Wednesday, December 7, 2011, Waimanalo Elementary & Intermediate School Cafeteria, 41–1330 Kalanianaole Highway, Waimanalo, HI, 5:30–6:30 p.m.: NHPA Section 106 input, 6:30–8:30 p.m.: Open house.
5. Thursday, December 8, 2011, Castle High School Cafeteria, 45–386 Kaneohe Bay Drive, Kaneohe, HI, 5:30–6:30 p.m.: NHPA Section 106 input, 6:30–9 p.m.: Open house.

Attendees will be able to submit written comments at the public meetings. DEIS team members will be present to receive oral comments; however, to ensure the accuracy of the record, all statements should be submitted in writing. Equal weight will be given to oral and written statements. All statements submitted during the public review period will become part of the public record on the DEIS and will be addressed in the Final EIS. Comments may also be submitted by U.S. mail or electronically, as described below.

The DEIS is available at the project Web site, *www.mcbh.usmc.mil/mv22h1eis* [*please note:* 1, before ''eis'' in the Web site address, is numeric], and at the libraries identified at the end of this notice.

ADDRESSES: Comments on the DEIS can be submitted via the project Web site or submitted in writing to: Department of the Navy, Naval Facilities Engineering Command, Pacific Division, Attn: EV21, MV–22/H–1 EIS Project Manager, 258 Makalapa Drive, Suite 100, Pearl Harbor, HI 96860–3134. Mailed comments must be postmarked no later than December 27, 2011, and electronic comments must be submitted by midnight, December 27, 2011, to be considered in this environmental review process.

FOR FURTHER INFORMATION CONTACT: Naval Facilities Engineering Command, Pacific Division, Attn: EV21, MV–22/H–1 EIS Project Manager, 258 Makalapa Drive, Suite 100, Pearl Harbor, HI 96860–3134.

SUPPLEMENTARY INFORMATION: A Notice of Intent for the EIS was published in the **Federal Register** on August 6, 2010 (Vol. 75, No. 151, pp. 47562–47564).

Proposed Action

The Proposed Action includes: (1) Basing and operating up to two Marine Medium Tiltrotor Squadrons (VMM) and one Marine Light Attack Helicopter Squadron (HMLA) to service USMC operations in Hawaii, and (2) conducting aviation training, readiness, and special exercise operations to attain and maintain proficiency in the employment of the MV–22 and H–1 (AH–1 and UH–1) aircraft at training facilities statewide. Demolition, new construction, and renovation are proposed to develop basing facilities for the VMM and HMLA squadrons. Specific activities would include: Construction, demolition and renovation of hangars and other structures; taxiway and parking apron improvements; construction of additional bachelor enlisted quarters (BEQs); construction of Marine Aviation Group 24 headquarters and parking structure; and expansion of Marine Aviation Logistics Squadron 24 aircraft maintenance facilities. Existing facilities would be used to the extent possible.

Purpose and Need

The purpose of the Proposed Action is to ensure that the Marine Air Ground

Task Force (MAGTF) is capable of supporting the needs of the III MEF operational commander to carry out legally mandated responsibilities in Hawaii. The need for the Proposed Action is to correct existing rotary-wing deficiencies of the MAGTF in Hawaii and the need for ''work-arounds'' through gap deployments from elsewhere (*e.g.,* from the continental U.S.). The purpose and need described here support the goals stated in the FY2011 Aviation Plan: (1) Sustain wartime operational tempo while improving current readiness and effectiveness through efficient use of existing resources; (2) execute planned transition strategies from legacy equipment to advanced capabilities of the next generation of equipment; and (3) improve war-fighting integration between the air, ground, and logistic elements of the MAGTF.

Alternatives Considered in the DEIS

The DEIS evaluates the following facility alternatives at Marine Corps Base (MCB) Hawaii Kaneohe Bay:

Alternative A (preferred): Accommodate all aviation facilities on the southeast side of the runway.

Alternative B: Accommodate MV–22 facilities on the northwest side of the runway at West Field, and accommodate all other aviation facilities on the southeast side of the runway; construct a runway underpass for access to West Field.

No Action Alternative: The following elements would be the same under both action alternatives: Number and type of personnel added to MCB Hawaii Kaneohe Bay, types of basing facilities that are required, improvements at training areas, and type and tempo of training operations. Both action alternatives would involve demolition, new construction, replacement, and renovation of facilities at MCB Hawaii Kaneohe Bay, and include improvements to existing facilities at Marine Corps Training Area Bellows (MCTAB) on the island of Oahu, Pohakuloa Training Area (PTA) on the island of Hawaii, and Molokai Training Support Facility (MTSF) on the island of Molokai.

Under either Alternative A or B, the VMM and HMLA squadrons would conduct training operations at: MCTAB; the DoA's Kahuku, Kawailoa, and Schofield Barracks East Range Training Areas and Dillingham Military Reservation on the island of Oahu; PTA and Upolu Airport on the island of Hawaii; Pacific Missile Range Facility on the island of Kauai; MTSF and Kalaupapa Airport on the island of Molokai; and the Hawaii Army National Guard Facility on the island of Maui.

With the No Action Alternative, the VMM and HMLA squadrons would not be based in Hawaii, and no facilities would be constructed at MCB Hawaii Kaneohe Bay or at the training areas to accommodate them. The No Action Alternative does not meet the purpose and need for the proposed action, but is included to provide a baseline against which the action alternatives may be compared.

Potential impacts are evaluated in the DEIS under all alternatives for the following resources/issues: Land use; airspace; air quality; noise; geology, soils, and topography; drainage, hydrology, and water quality; biological resources; cultural resources; safety and environmental health; socioeconomics; infrastructure; and energy use.

The DEIS describes an array of conservation and construction measures and features of project design and planning that would avoid or minimize most potential impacts. The proposed action would fully comply with regulatory requirements for the protection of environmental resources.

Implementing Alternative A or B would have construction impacts on cultural resources at MCB Hawaii Kaneohe Bay and at MCTAB, as well as potential impacts from MV–22 rotor downwash on archaeological sites in some of the training areas. Impacts on historic buildings and archaeological resources at MCB Hawaii Kaneohe Bay would vary between the two alternatives due to the placement of some facilities on different sides of the runway, as well as different options presented for BEQ demolition and construction. Impacts on archaeological resources at MCTAB would depend on the depth of ground-disturbing activities during construction. Impacts on archaeological features at certain landing zones (LZs) in the Kahuku and Kawailoa Training Areas on the island of Oahu and at PTA on the island of Hawaii cannot currently be assessed because archaeological surveys of those areas have not been completed. The extent of impacts due to MV–22 rotor downwash would depend on the location and depth of such features. Surveys of these areas will be completed and any impacts evaluated prior to use of the LZs by the MV–22 squadrons (VMM). Any required avoidance or mitigation measures for cultural resources impacts resulting from implementation of the proposed action would be documented in the Programmatic Agreement being prepared as part of the NHPA Section 106 process.

With Alternative A or B, there is a potential for traffic impacts at MCB Hawaii Kaneohe Bay. These would be mitigated with improvements at three intersections and improvement of procedures at the entry gates for increased efficiency and capacity.

Impacts on the endangered Hawaiian hoary bat (*Lasiurus cinereus semotus*) are possible at the DoA training areas on Oahu and at PTA on the island of Hawaii. DoN has submitted a biological evaluation to the U.S. Fish & Wildlife Service with a determination of ''may affect but not likely to adversely affect,'' in compliance with Section 7 of the Endangered Species Act. In addition, DoN has made ''no effect'' determinations for two endangered species at PTA, creeping mint (*Stenogyne angustifolia*) and nene or Hawaiian goose (*Branta sandvicensis*).

Another possible impact during operations is erosion due to MV–22 rotor downwash at unpaved LZs where soils have high erosion potential (Schofield Barracks East Range and parts of Kawailoa Training Area). Conditions would be monitored at these landing zones. Should field observations verify the occurrence of soil erosion, the USMC would work with the range manager to implement appropriate repairs or other management actions.

Schedule: The Notice of Availability publication in the **Federal Register** and local print media starts the 45-day public comment period for the DEIS. The USMC will consider and respond to all written and electronic comments, including email, submitted as described above in preparing the Final EIS. DoN intends to issue the Final EIS in 2012, at which time a Notice of Availability will be published in the **Federal Register** and local media. A Record of Decision is expected in 2012.

Copies of the DEIS are available for public review at the following libraries within the State of Hawaii:

1. *Island of Hawaii Libraries:*

Hilo: 300 Waianuenue Ave, Hilo, HI 96720.

Hilo: UH Hilo, 200 W. Kawili St, Hilo, HI 96720.

Kailua-Kona: 75–138 Hualalai Rd, Kailua-Kona, HI 96740.

North Kohala: 54–3645 Akoni Pule Hwy, Kapaau, HI 96755.

Thelma Parker: 67–1209 Mamalahoa Hwy, Kamuela, HI 96743.

2. *Island of Maui Libraries:*

Kahului: 90 School St, Kahului, HI 96732.

Kahului: UH Maui College, 310 W. Kaahumanu Ave, Kahului, HI 96732.

Kihei: 35 Waimahaihai St, Kihei, HI 96753.

Wailuku: 251 High St, Wailuku, HI 96793.

3. *Island of Kauai Libraries:*

Lihue: 4344 Hardy St, Lihue, HI 96766.

Lihue: Kauai Community College, 3–1901 Kaumualii Hwy, Lihue, HI 96766.

Waimea: P.O. Box 397, Waimea, HI 96796.

4. *Island of Molokai Library:*

Kaunakakai: P.O. Box 395, Kaunakakai, HI 96748.

5. *Island of Oahu Libraries:*

Honolulu: Hawaii State Library, 478 S. King St, Honolulu, HI 96813.

Honolulu: UH Manoa—Hamilton Library, 2550 McCarthy Mall, Honolulu, HI 96822.

Kahuku: 56–490 Kamehameha Hwy, Kahuku, HI 96731.

Kailua: 239 Kuulei Rd, Kailua, HI 96734.

Kaneohe: 45–829 Kamehameha Hwy, Kaneohe, HI 96744.

Kaneohe Windward Community College, 45–720 Keaahala Rd, Kaneohe, HI 96744.

Mililani: 95–450 Makaimoimo St, Mililani, HI 96789.

Wahiawa: 820 California Ave, Wahiawa, HI 96786.

Waialua: P.O. Box 684, Waialua, HI 96791.

Waimanalo: 41–1320 Kalanianaole Hwy, Waimanalo, HI 96795.

Dated: November 3, 2011.

L. M. Senay,

Lieutenant, Office of the Judge Advocate General, U.S. Navy, Alternate Federal Register Liaison Officer.

[FR Doc. 2011–29119 Filed 11–9–11; 8:45 am]

BILLING CODE 3810–FF–P

DEPARTMENT OF EDUCATION

Notice of Submission for OMB Review

AGENCY: Department of Education.

ACTION: Comment Request.

SUMMARY: The Director, Information Collection Clearance Division, Privacy, Information and Records Management Services, Office of Management, invites comments on the submission for OMB review as required by the Paperwork Reduction Act of 1995 (Pub. L. 104–13).

DATES: Interested persons are invited to submit comments on or before December 12, 2011.

ADDRESSES: Written comments should be addressed to the Office of Information and Regulatory Affairs, Attention: Education Desk Officer, Office of Management and Budget, 725 17th Street NW., Room 10222, New Executive Office Building, Washington, DC 20503, be faxed to (202) 395–5806 or emailed to *oira_submission@omb.eop.gov* with a cc: to *ICDocketMgr@ed.gov.* Please note that written comments received in response to this notice will be considered public records.

SUPPLEMENTARY INFORMATION: Section 3506 of the Paperwork Reduction Act of 1995 (44 U.S.C. Chapter 35) requires that the Office of Management and Budget (OMB) provide interested Federal agencies and the public an early opportunity to comment on information collection requests. The OMB is particularly interested in comments which: (1) Evaluate whether the proposed collection of information is necessary for the proper performance of the functions of the agency, including whether the information will have practical utility; (2) Evaluate the accuracy of the agency's estimate of the burden of the proposed collection of information, including the validity of the methodology and assumptions used; (3) Enhance the quality, utility, and clarity of the information to be collected; and (4) Minimize the burden of the collection of information on those who are to respond, including through the use of appropriate automated, electronic, mechanical, or other technological collection techniques or other forms of information technology.

Dated: November 7, 2011.

Darrin King,

Director, Information Collection Clearance Division, Privacy, Information and Records Management Services, Office of Management.

Institute of Education Sciences

Type of Review: Revision.

Title of Collection: 2011–12 National Postsecondary Student Aid Study (NPSAS:12) Full Scale Student Data Collection.

OMB Control Number: 1850–0666.

Agency Form Number(s): N/A.

Frequency of Responses: Annually.

Affected Public: Individuals or Households; Not-for-Profit Institutions.

Total Estimated Number of Annual Responses: 89,631.

Total Estimated Annual Burden Hours: 72,637.

Abstract: National Postsecondary Student Aid Study (NPSAS), a nationally representative study of how students and their families finance education beyond high school, was first implemented by the National Center for Education Statistics (NCES) in 1987 and has been fielded every three to four years since. This submission is for collection of student data in the eighth cycle in the series, NPSAS:12, and supplements the recently obtained approval for NPSAS:12 collection of institutional data (OMB# 1850–0666 v.9). NPSAS:12 will also serve as the base year study for the Beginning Postsecondary Students Longitudinal Study (BPS) of first-time postsecondary students that will focus on issues of persistence, degree attainment, and employment outcome. BPS will conduct follow-up studies in 2014 and 2017, with revised strata for institution sampling to reflect the recent growth in enrollment in for-profit four-year institutions. Institution contacting for the full scale collection will begin in September 2011, list collection will be conducted January through June 2012, and student data collection will take place January through September 2012. This submission requests approval for collecting student records, conducting student interviews, and post-data collection administrative record matching for the full-scale NPSAS:12.

Copies of the information collection submission for OMB review may be accessed from the RegInfo.gov Web site at *http://www.reginfo.gov/public/do/PRAMain* or from the Department's Web site at *http://edicsweb.ed.gov,* by selecting the ''Browse Pending Collections'' link and by clicking on link number 4744. When you access the information collection, click on ''Download Attachments'' to view. Written requests for information should be addressed to U.S. Department of Education, 400 Maryland Avenue SW., LBJ, Washington, DC 20202–4537. Requests may also be electronically mailed to the Internet address *ICDocketMgr@ed.gov* or faxed to (202) 401–0920. Please specify the complete title of the information collection and OMB Control Number when making your request.

Individuals who use a telecommunications device for the deaf (TDD) may call the Federal Information Relay Service (FIRS) at 1–(800) 877–8339.

[FR Doc. 2011–29145 Filed 11–9–11; 8:45 am]

BILLING CODE 4000–01–P

DEPARTMENT OF ENERGY

Environmental Management Site-Specific Advisory Board, Northern New Mexico

AGENCY: Department of Energy.

ACTION: Notice of Open Meeting.

SUMMARY: This notice announces a meeting of the Environmental Management Site-Specific Advisory Board (EM SSAB), Northern New Mexico. The Federal Advisory Committee Act (Pub. L. 92–463, 86 Stat.

770) requires that public notice of this meeting be announced in the **Federal Register.**

DATES: Wednesday, November 30, 2011, 1 p.m.–7 p.m.

ADDRESSES: Ohkay Owingeh Conference Center, North Taos Highway 68, San Juan Pueblo, New Mexico 87566.

FOR FURTHER INFORMATION CONTACT: Menice Santistevan, Northern New Mexico Citizens' Advisory Board (NNMCAB), 1660 Old Pecos Trail, Suite B, Santa Fe, NM 87505. *Phone* (505) 995–0393; *Fax* (505) 989–1752 or *Email: msantistevan@doeal.gov.*

SUPPLEMENTARY INFORMATION:

Purpose of the Board: The purpose of the Board is to make recommendations to DOE–EM and site management in the areas of environmental restoration, waste management, and related activities.

Tentative Agenda

1 p.m. Call to Order by Co-Deputy Designated Federal Officers (DDFO), Ed Worth and Lee Bishop.
Establishment of a Quorum: Roll Call and Excused Absences.
Welcome and Introductions, Ralph Phelps.
Welcome to Ohkay Owingeh Pueblo, Governor Ron Lovato (invited).
Approval of Agenda and September 28, 2011, Meeting Minutes.
1:30 p.m. Public Comment Period.
1:45 p.m. Old Business:
- Written Reports.
- Other Items.

2 p.m. New Business:
- Consideration and Action on 2011 Self Evaluation, Carlos Valdez.
- Other items.

2:30 p.m. Items from DDFOs, Ed Worth and Lee Bishop.
3 p.m. Break.
3:15 p.m. ''Possible Impacts of WIPP Expansion Proposals on LANL Cleanup and the Consent Order,'' Scott Kovak, Nuclear Watch NM.
4 p.m. Presentation on Waste Disposal, Robert Neill.
5 p.m. Dinner Break.
6 p.m. Public Comment Period.
6:15 p.m. Consideration and Action on Draft Recommendations to the DOE, Ralph Phelps.
6:45 p.m. Wrap up and Comments from Board Members.
7 p.m. Adjourn, Lee Bishop and Ed Worth.

Public Participation: The EM SSAB, Northern New Mexico, welcomes the attendance of the public at its advisory committee meetings and will make every effort to accommodate persons with physical disabilities or special needs. If you require special accommodations due to a disability, please contact Menice Santistevan at least seven days in advance of the meeting at the telephone number listed above. Written statements may be filed with the Board either before or after the meeting. Individuals who wish to make oral statements pertaining to agenda items should contact Menice Santistevan at the address or telephone number listed above. Requests must be received five days prior to the meeting and reasonable provision will be made to include the presentation in the agenda. The Deputy Designated Federal Officer is empowered to conduct the meeting in a fashion that will facilitate the orderly conduct of business. Individuals wishing to make public comments will be provided a maximum of five minutes to present their comments.

Minutes: Minutes will be available by writing or calling Menice Santistevan at the address or phone number listed above. Minutes and other Board documents are on the Internet at: *http://www.nnmcab.org/.*

Issued at Washington, DC, on November 4, 2011.

LaTanya R. Butler,

Acting Deputy Committee Management Officer.

[FR Doc. 2011–29143 Filed 11–9–11; 8:45 am]

BILLING CODE 6405–01–P

DEPARTMENT OF ENERGY

Environmental Management Site-Specific Advisory Board, Portsmouth

AGENCY: Department of Energy (DOE).

ACTION: Notice of Open Meeting.

SUMMARY: This notice announces a meeting of the Environmental Management Site-Specific Advisory Board (EM SSAB), Portsmouth. The Federal Advisory Committee Act (Pub. L. 92–463, 86 Stat. 770) requires that public notice of this meeting be announced in the **Federal Register**.

DATES: Thursday, December 1, 2011, 6 p.m.

ADDRESSES: Ohio State University, Endeavor Center, 1862 Shyville Road, Piketon, Ohio 45661.

FOR FURTHER INFORMATION CONTACT: Joel Bradburne, Deputy Designated Federal Officer, Department of Energy Portsmouth/Paducah Project Office, Post Office Box 700, Piketon, Ohio 45661, (740) 897–3822, *Joel.Bradburne@lex.doe.gov.*

SUPPLEMENTARY INFORMATION: *Purpose of the Board:* The purpose of the Board is to make recommendations to DOE–EM and site management in the areas of environmental restoration, waste management and related activities.

Tentative Agenda

- Call to Order, Introductions, Review of Agenda.
- Approval of November Minutes.
- Deputy Designated Federal Officer's Comments.
- Federal Coordinator's Comments.
- Liaisons' Comments.
- Presentation.
- FLUOR B&W Community Commitment Plan Update, Jerry Schneider.
- Administrative Issues:
  - Subcommittee Updates.
- Public Comments.
- Final Comments from the Board.
- Adjourn.

Public Participation: The meeting is open to the public. The EM SSAB, Portsmouth, welcomes the attendance of the public at its advisory committee meetings and will make every effort to accommodate persons with physical disabilities or special needs. If you require special accommodations due to a disability, please contact Joel Bradburne at least seven days in advance of the meeting at the phone number listed above. Written statements may be filed with the Board either before or after the meeting. Individuals who wish to make oral statements pertaining to agenda items should contact Joel Bradburne at the address or telephone number listed above. Requests must be received five days prior to the meeting and reasonable provision will be made to include the presentation in the agenda. The Deputy Designated Federal Officer is empowered to conduct the meeting in a fashion that will facilitate the orderly conduct of business. Individuals wishing to make public comments will be provided a maximum of five minutes to present their comments.

Minutes: Minutes will be available by writing or calling Joel Bradburne at the address and phone number listed above. Minutes will also be available at the following Web site: *http://www.ports-ssab.energy.gov/.*

Issued at Washington, DC, on November 7, 2011.

LaTanya R. Butler,

Acting Deputy Committee Management Officer.

[FR Doc. 2011–29148 Filed 11–9–11; 8:45 am]

BILLING CODE 6450–01–P

DEPARTMENT OF ENERGY

Plan for Conduct of 2012 Electric Transmission Congestion Study

AGENCY: Office of Electricity Delivery and Energy Reliability, Department of Energy (DOE).

ACTION: Notice of regional workshops and request for written comments.

SUMMARY: Section 216(a)(1) of the Federal Power Act (FPA) requires the Department of Energy (Department or DOE) to complete a study of electric transmission congestion every three years. DOE issued its first ''National Electric Transmission Congestion Study'' (Congestion Study) in August 2006 and the second early in 2010. The Department is now initiating preparations for the 2012 Congestion Study, and seeks comments on what publicly-available data and information should be considered, and what types of analysis should be performed to identify and understand the significance and character of transmission congestion. DOE will host four regional pre-study workshops in early December 2011 to receive input and suggestions concerning the study. DOE expects to release a draft of the study in 2012 for a 60-day comment period. After reviewing and considering the comments received, DOE will publish a final version of the study. Interested persons may submit comments in response to this notice in the manner indicated in the **ADDRESSES** section.

DATES: See **SUPPLEMENTARY INFORMATION** section III. Pre-Study Workshops for workshop dates and locations. DOE recognizes that some commenters may wish to draw upon or direct us to studies or analyses that are now in process. DOE requests that commenters submit such materials as they become available, but no later than January 31, 2012.

ADDRESSES: You may submit written comments to *http://energy.gov/oe/congestion-study-2012,* or by mail to the Office of Electricity Delivery and Energy Reliability, OE–20, U.S. Department of Energy, 1000 Independence Avenue SW., Washington, DC 20585. The following electronic file formats are acceptable: Microsoft Word (.doc), Corel Word Perfect (.wpd), Adobe Acrobat (.pdf), Rich Text Format (.rtf), plain text (.txt), Microsoft Excel (.xls), and Microsoft PowerPoint (.ppt). The Department intends to use only data that is publicly available for this study. Accordingly, please do not submit information that you believe is or should be protected from public disclosure. DOE is responsible for the final determination concerning disclosure or nondisclosure of information submitted to DOE and for treating it in accordance with the DOE's Freedom of Information regulations (10 CFR 1004.11). All comments received by DOE regarding the 2012 Congestion Study will be posted on *http://energy.gov/oe/congestion-study-2012* for public review.

Note: Delivery of the U.S. Postal Service mail to DOE continues to be delayed by several weeks due to security screening. DOE therefore encourages those wishing to comment to submit their comments electronically by email. If comments are submitted by regular mail, the Department requests that they be accompanied by a CD or diskette containing electronic files of the submission.

FOR FURTHER INFORMATION CONTACT: David Meyer, DOE Office of Electricity Delivery and Energy Reliability, (202) 586–1411, *david.meyer@hq.doe.gov.*

SUPPLEMENTARY INFORMATION:

I. Background

The Energy Policy Act of 2005 (Pub. L. 109–58) (EPAct) added several new provisions to the Federal Power Act (16 U.S.C. 824p) (FPA), including FPA section 216. FPA section 216(a) requires the Secretary of Energy to conduct a study of electric transmission congestion within one year from the date of enactment of EPAct and every three years thereafter. The 2006 and 2009 Congestion Studies reviewed congestion nationwide except for the portion of Texas covered by the Electricity Reliability Council of Texas, to which FPA section 216 does not apply. The 2012 Congestion Study will be of a similar scope. FPA section 216(a) requires the congestion study be conducted in consultation with affected States. Also, in exercising its responsibilities under Section 216, DOE is required to consult regularly with the Federal Energy Regulatory Commission (FERC), any appropriate regional entity referred to in FPA section 215, i.e., the regional electric reliability organizations,[1] and Regional Transmission Organizations approved by FERC.

In preparing the 2009 Congestion Study, the Department gathered historical congestion data obtained from existing studies prepared by regional reliability councils, regional transmission organizations (RTOs) and independent system operators (ISOs), and regional planning groups. Unlike the 2006 Congestion Study, the Department did not conduct or support studies of projected congestion for the 2009 Congestion Study. The Department did, however, direct the first study of publicly available historic congestion data in the Eastern Interconnection. As part of the data gathering, the Department held six public Regional Workshops and one public Technical Conference. DOE issued the 2009 Congestion Study in 2010 and requested comments within 60 days.

The 2009 Congestion Study reviewed congestion areas from the 2006 Congestion Study. The two ''Critical Congestion Areas'' (*i.e.,* areas where the current and/or projected effects of congestion are especially broad and severe) identified in 2006 were still determined to be areas of critical congestion: The Atlantic coastal area from metropolitan New York through northern Virginia (the Mid-Atlantic Critical Congestion Area), and southern California (the Southern California Critical Congestion Area). Two of the ''Congestion Areas of Concern'' (*i.e.,* areas where a large-scale congestion problem exists or may be emerging but more information and analysis appear to be needed to determine the magnitude of the problem) identified in 2006 also remain areas of concern: The San Francisco Peninsula and the Seattle-Portland area. Two Congested Areas of Concern areas, New England and the Phoenix-Tucson areas, were found to have alleviated or made significant progress on alleviating congestion; therefore, the 2009 Congestion Study did not identify these areas as Congestion Areas of Concern. The 2009 Congestion Study identified Conditional Constraint Areas focused on areas of potential renewable generation to satisfy requirements of the American Reinvestment and Recovery Act. Conditional Constraint Areas were identified in a large area of the Western and Eastern Interconnections that could support wind (Midwest), solar (Southwest) and geothermal (Nevada-Oregon-Idaho-Utah) generation, and areas pertaining to off-shore wind on both the east and west coasts, the Gulf of Mexico and on the Great Lakes.

II. Plan for the 2012 Congestion Study

The 2012 study will draw upon many of the same kinds of data, analyses and information as the earlier studies, with some additions. These sources may include, but are not limited to:

[1] The regional reliability organizations under FPA section 215 are the Florida Reliability Coordinating Council, the Midwest Reliability Organization, the Northeast Power Coordinating Council, Reliability First Corporation, SERC Reliability Corporation, the Southwest Power Pool, the Texas Regional Entity (TRE), and the Western Electricity Coordinating Council.

○ Electricity market analyses, including locational marginal price (LMP) patterns.

○ Reliability analyses and actions, including transmission loading relief (TLR) actions.

○ Historic energy flows.

○ Current and projected electric supply and generation plans.

○ Recent, current and planned transmission and interconnection queues.

○ Current and forecast electricity loads, including energy efficiency, distributed generation (DG) and demand response (DR) plans and policies.

○ The location of renewable resources and state and regional policies with respect to renewable development.

○ Projected impacts of current or pending environmental regulation on generation availability.

○ Effects of recent or projected economic conditions on demand and congestion.

○ Analytic results from the eastern and western interconnection-level planning studies undertaken with DOE support.

○ Filings under FERC Order 890.

DOE intends to release a draft version of the 2012 Congestion Study in 2012 for a 60-day comment period. After reviewing and considering the comments received, DOE will issue a final version of the study.

III. Pre-Study Workshops

In December 2011, DOE will host four regional half-day pre-study workshops to receive and discuss input relevant to the 2012 Congestion Study, including comments on what publicly-available data should be considered to identify and understand the significance and character of transmission congestion. Each workshop will consist of panels of invited speakers who will present their views, followed by a discussion among the panelists led by DOE staff. Each workshop will begin at 9 a.m. and end by 12:30 p.m.

Workshops: The cities, dates, and locations for the technical workshops are:

1. Philadelphia, PA, December 6, 2011, at the Philadelphia Airport Hilton, 4509 Island Avenue, Philadelphia, PA 19153.

2. St. Louis, MO, December 8, 2011, at the St. Louis Airport Hilton, 10330 Natural Bridge Road, St. Louis, MO 63134.

3. Portland, OR, December 13, 2011, at the Sheraton Portland Airport Hotel, 8235 Northeast Airport Way, Portland, OR 97220.

4. San Diego, CA, December 15, 2011, at the Sheraton San Diego Hotel & Marina, 1380 Harbor Island Drive, San Diego, CA 92101.

Additional details about the workshops are available at *http://energy.gov/oe/congestion-study-2012.*

Public Participation: The workshops will be open to the public, and will be simulcast over the Internet. Advance registration for the Webcasts is required by visiting *http://www.iian.ibeam.com/events/ener001/26552/.* A complete archive of each event will be on this Web site soon after the conclusion of the event, and will be downloadable in podcast format.

Members of the public interested in offering oral comments at a pre-study workshop may do so on the day of the workshop, subject to the time available. Approximately one-half hour will be reserved for public comments. Time allotted per speaker will depend on the number who wish to speak but is not expected to exceed three minutes. Anyone who is not able to attend the workshop or has had insufficient time to present material is invited to submit a written statement in the manner indicated in the **ADDRESSES** section of this notice.

Note: The Department will consult with the States and regional reliability organizations in the preparation of the 2012 Congestion Study. DOE recognizes that in addition to (or as an alternative to) participating in the regional pre-study workshops, some States or other organizations may wish to discuss congestion matters with the Department on a bilateral basis. DOE will reserve time at the sites of the regional workshops for such bilateral discussions, and it invites interested States or other organizations to contact the Department to identify mutually convenient times. In addition, the Department will maintain an ''open door'' policy, and will schedule congestion meetings at DOE headquarters upon request with States, reliability organizations, Regional Transmission Organizations, Independent System Operators, utilities, and other stakeholders.

IV. Comments in Response to This Notice

All comments filed in response to today's notice should be marked ''Re Preparation of the 2012 Congestion Study,'' and sent to the Department in the manner indicated in the **ADDRESSES** section of this notice. In written comments in response to this notice and at the regional workshops, DOE requests States, utilities, regional transmission organizations (RTOs), independent system operators (ISOs), and other stakeholders to describe changes in their respective areas since 2009 that affect the location, duration, frequency, magnitude, and significance of transmission congestion, including related transmission constraints. Special attention should be given to the question of how to gauge the magnitude or significance of congestion using publicly available data, including FERC 890 filings. In addition, DOE is particularly interested in comments that speak to the most appropriate and effective methods for distinguishing between the effects of technical limits on line loadings and possible contractual limits on the use of those same lines.

Issued in Washington, DC, on November 4, 2011.

Patricia A. Hoffman,

Assistant Secretary, Office of Electricity Delivery and Energy Reliability.

[FR Doc. 2011–29189 Filed 11–9–11; 8:45 am]

BILLING CODE 6450–01–P

DEPARTMENT OF ENERGY

Energy Information Administration

Agency Information Collection Activities: Proposed Collection; Comment Request

AGENCY: U.S. Energy Information Administration (EIA), Department of Energy (DOE).

ACTION: Agency Information Collection Activities: Proposed Collection; Comment Request.

SUMMARY: The EIA is soliciting comments on the proposed 3-year extension of EIA Form EIA–914 *Monthly Natural Gas Production Report.*

DATES: Comments must be filed by January 9, 2012. If you anticipate difficulty in submitting comments within that period, contact the person listed below as soon as possible.

ADDRESSES: Send comments to Mr. Jeffrey Little. The mailing address is Jeffrey Little, EI–24, Forrestal Building, U.S. Department of Energy, 1000 Independence Ave. SW., Washington, DC 20585. To ensure receipt of the comments by the due date, submission by email (*Jeffrey.Little@eia.gov*) is recommended. Alternatively, Mr. Little may be contacted by telephone at (202) 586–6284.

FOR FURTHER INFORMATION CONTACT: Requests for additional information or copies of any forms and instructions should be directed to Mr. Jeffrey Little at the contact information listed above. The proposed forms and instructions are also available on the Internet at: *http://www.eia.doe.gov/oil_gas/natural_gas/survey_forms/nat_survey_forms.html.*

SUPPLEMENTARY INFORMATION:

I. Background
II. Current Actions
III. Request for Comments

I. Background

The Federal Energy Administration Act of 1974 (Pub. L. 93–275, 15 U.S.C. 761 *et seq.*) and the DOE Organization Act (Pub. L. 95–91, 42 U.S.C. 7101 *et seq.*) require the EIA to carry out a centralized, comprehensive, and unified energy information program. This program collects, evaluates, assembles, analyzes, and disseminates information on energy resource reserves, production, demand, technology, and related economic and statistical information. This information is used to assess the adequacy of energy resources to meet near and longer-term domestic demands.

The EIA, as part of its effort to comply with the Paperwork Reduction Act of 1995 (Pub. L. 104–13, 44 U.S.C. chapter 35), provides the general public and other Federal agencies with opportunities to comment on collections of energy information conducted by or in conjunction with the EIA. Any comments received help the EIA to prepare data requests that maximize the utility of the information collected, and to assess the impact of collection requirements on the public. Also, the EIA will later seek approval by the Office of Management and Budget (OMB) under Section 3507(a) of the Paperwork Reduction Act of 1995.

Currently there are 243 respondents, a sample of operators of natural gas wells report on the Form EIA–914. From a universe of about 9,300 active operators, a cut-off sample is selected of the largest natural gas producers by State or area, known to have produced at least 20 million cubic feet (10 million cubic feet in Oklahoma) of natural gas per day. Using information collected on Form EIA–914, EIA estimates and disseminates timely and reliable monthly natural gas production data for Texas (onshore and offshore) and Louisiana (onshore and offshore), New Mexico, Oklahoma, Wyoming, the Federal Offshore Gulf of Mexico, Other States (onshore and offshore for the remaining gas producing States with Alaska excluded), and the lower 48 States. This collection is essential to the mission of the DOE in general and the EIA in particular because of the increasing demand for natural gas in the United States and the requirement for accurate and timely natural gas production information necessary to monitor the United States natural gas supply and demand balance. These estimates are essential to the development, implementation, and evaluation of energy policy and legislation. Data are disseminated through the *EIA Natural Gas Monthly, Monthly Natural Gas Gross Production Report,* and *EIA Natural Gas Annual* Web site. Secondary publications that use the data include EIA's *Short-Term Energy Outlook, Annual Energy Outlook, Monthly Energy Review,* and *Annual Energy Review.*

II. Current Actions

This section contains the following information about the energy information collection submitted to OMB for review: (1) The collection numbers and title; (2) the sponsor (*i.e.,* the Department of Energy component); (3) the current OMB docket number (if applicable); (4) the type of request (*i.e.,* new, revision, extension, or reinstatement); (5) response obligation (*i.e.,* mandatory, voluntary, or required to obtain or retain benefits); (6) a description of the need for and proposed use of the information; (7) an estimate of the number of respondents; (8) an estimate of the total annual responses; (9) an estimate of the total annual reporting burden; (10) an estimate of reporting and recordkeeping costs.

1. *Information Collection Request Title:* Form EIA–914, ''Monthly Natural Gas Production Report''.

2. *Agency:* U.S. Energy Information Administration.

3. *OMB Control Number:* 1905–0205.

4. *Type of review:* Three-year extension.

5. *Type of collection:* Mandatory.

6. The purpose of the survey is to collect monthly data on the production of natural gas in seven geographical areas (Texas (including State offshore), Louisiana (including State offshore), Oklahoma, New Mexico, Wyoming, Federal Gulf of Mexico offshore and Other States (defined as all remaining states, except Alaska, in which the operator produced natural gas during the report month)). Data will be used to monitor natural gas supplies. Survey respondents would be a sample of well operators.

7. *Annual Estimated Number of Respondents:* 243.

8. *Annual Estimated Number of Total Responses:* 2,916.

9. *Annual Estimated Number of Burden Hours:* 8,748.

10. *Annual Estimated Reporting and Recordkeeping Cost Burden:* $0.

III. Request for Comment

Prospective respondents and other interested parties should comment on the actions discussed in item II. The following guidelines are provided to assist in the preparation of comments.

As a Potential Respondent to the Request for Information

A. Is the proposed collection of information necessary for the proper performance of the functions of the agency and does the information have practical utility?

B. What actions could be taken to help ensure and maximize the quality, objectivity, utility, and integrity of the information to be collected?

C. Are the instructions and definitions clear and sufficient? If not, which instructions need clarification?

D. Can the information be submitted by the respondent by the due date?

E. Public reporting burden for this collection is estimated to average 3 hours per response. The estimated burden includes the total time necessary to provide the requested information. In your opinion, how accurate is this estimate?

F. The agency estimates that the only cost to a respondent is for the time it will take to complete the collection. Will a respondent incur any start-up costs for reporting, or any recurring annual costs for operation, maintenance, and purchase of services associated with the information collection?

G. What additional actions could be taken to minimize the burden of this collection of information? Such actions may involve the use of automated, electronic, mechanical, or other technological collection techniques or other forms of information technology.

H. Does any other Federal, State, or local agency collect similar information? If so, specify the agency, the data element(s), and the methods of collection.

As a Potential User of the Information To Be Collected

A. Is the proposed collection of information necessary for the proper performance of the functions of the agency and does the information have practical utility?

B. What actions could be taken to help ensure and maximize the quality, objectivity, utility, and integrity of the information disseminated?

C. Is the information useful at the levels of detail to be collected?

D. For what purpose(s) would the information be used? Be specific.

E. Are there alternate sources for the information and are they useful? If so, what are their weaknesses and/or strengths?

Comments submitted in response to this notice will be summarized and/or included in the request for OMB

approval of the form. They also will become a matter of public record.

Statutory Authority: Section 13(b) of the Federal Energy Administration Act of 1974, Pub. L. 93–275, codified at 15 U.S.C. 772(b).

Issued in Washington, DC, on November 2, 2011.

Stephanie Brown,

Director, Office of Survey Development and Statistical Integration, U.S. Energy Information Administration.

[FR Doc. 2011–29187 Filed 11–9–11; 8:45 am]

BILLING CODE 6450–01–P

DEPARTMENT OF ENERGY

Energy Information Administration

Agency Information Collection Activities: Submission for OMB Review; Comment Request

AGENCY: U. S. Energy Information Administration (EIA), Department of Energy (DOE).

ACTION: Agency Information Collection Activities: Submission for OMB Review; Comment Request.

SUMMARY: The EIA has submitted the U.S. Energy Information Administration's Monthly Biodiesel Production Survey to the Office of Management and Budget (OMB) for revision and a three-year extension under section 3507(h)(1) of the Paperwork Reduction Act of 1995 (Pub. L. 104–13) (44 U.S.C. 3501 *et seq*).

DATES: Comments must be filed by December 12, 2011. If you anticipate that you will be submitting comments but find it difficult to do so within that period, you should contact the OMB Desk Officer for DOE listed below as soon as possible.

ADDRESSES: Send comments to OMB Desk Officer for DOE, Office of Information and Regulatory Affairs, Office of Management and Budget. To ensure receipt of the comments by the due date, submission by Fax at (202) 395–7285 or email to *Chad_S_Whiteman@omb.eop.gov* is recommended. The mailing address is 725 17th Street NW., Washington, DC 20503. The OMB DOE Desk Officer may be telephoned at (202) 395–4718. (A copy of your comments should also be provided to EIA's Office of Survey Development and Statistical Integration at the address below.)

FOR FURTHER INFORMATION CONTACT: Requests for additional information should be directed to Jason Worrall. To ensure receipt of the comments by the due date, submission by email (*Jason.worrall@eia.gov*) is also recommended. The mailing address is Office of Survey Development and Statistical Integration (EI–21), Forrestal Building, U.S. Department of Energy, 1000 Independence Ave. SW., Washington, DC 20585–0670. Mr. Worrall may be contacted by telephone at (202) 586–6075.

SUPPLEMENTARY INFORMATION: This section contains the following information about the energy information collections submitted to OMB for review: (1) The collection numbers and title; (2) the sponsor (*i.e.,* the Department of Energy component); (3) the current OMB docket number (if applicable); (4) the type of request (*i.e,* new, revision, extension, or reinstatement); (5) response obligation (*i.e.,* mandatory, voluntary, or required to obtain or retain benefits); (6) a description of the need for and proposed use of the information; (7) a categorical description of the likely respondents; (8) estimated number of respondents annually; (9) an estimate of the total annual reporting burden in hours (*i.e.,* the estimated number of likely respondents times the proposed frequency of response per year times the average hours per response); and (10) an estimate of the total annual reporting and recordkeeping cost burden (in thousands of dollars).

1. EIA–22M, ''Monthly Biodiesel Production Survey.''
2. U.S. Energy Information Administration.
3. OMB Number 1905–0207.
4. Three-year extension.
5. Mandatory.
6. The purpose of the survey is to collect information from biodiesel producers regarding the following: Plant location, capacity, and operating status; Biodiesel and co-product production; Inputs to production; Sales for end-use and resale; Sales revenue; and Biodiesel stocks.
7. Business or other for-profit.
8. 150 Respondents
9. Annual total of 5400, hours, collected 12 times per year, three hours per response.
10. Annual total of $0.

Please refer to the supporting statement as well as the proposed forms and instructions for more information about the purpose, who must report, when to report, where to submit, the elements to be reported, detailed instructions, provisions for confidentiality, and uses (including possible nonstatistical uses) of the information. For instructions on obtaining materials, see the **FOR FURTHER INFORMATION CONTACT** section.

Statutory Authority: Section 13(b) of the Federal Energy Administration Act of 1974, P.L. 93–275, codified at 15 U.S.C. 772(b).

Issued in Washington, DC, on November 2, 2011.

Stephanie Brown,

Director, Office of Survey Development and Statistical Integration, U.S. Energy Information Administration.

[FR Doc. 2011–29147 Filed 11–9–11; 8:45 am]

BILLING CODE 6450–01–P

DEPARTMENT OF ENERGY

Western Area Power Administration

Notice of Availability of the Draft Environmental Impact Statement for the Proposed Solar Reserve LLC Quartzsite Solar Energy Project, La Paz County, AZ (DOE/EIS—0440) and the proposed Amendment to the Bureau of Land Management Yuma Field Office Resource Management Plan

AGENCY: Western Area Power Administration, DOE.

ACTION: Notice of Availability.

SUMMARY: In accordance with the National Environmental Policy Act (NEPA) of 1969, as amended, and the Federal Land Policy and Management Act (FLPMA) of 1976, as amended, Western Area Power Administration (Western) and the Bureau of Land Management (BLM) have prepared a Draft Environmental Impact Statement (DEIS) for the proposed Quartzsite Solar Energy Project (Project), in La Paz County, Arizona, and the proposed amendment to the Yuma Field Office (Yuma) Resource Management Plan (RMP), and by this notice are announcing the opening of the public comment period. Western is the lead Federal agency for purposes of satisfying the NEPA requirements with the BLM acting as a cooperating agency.

DATES: The public is invited to submit comments on the DEIS for the proposed Project and the proposed RMP amendment during the public comment period. To ensure that comments will be considered, Western or BLM must receive written comments on the DEIS/proposed RMP amendment within 90 days following the date the Environmental Protection Agency publishes its Notice of Availability in the **Federal Register**. Oral comments will be taken at a public hearing, which will be announced at least 15 days in advance through public notices, media releases, and/or mailings.

ADDRESSES: Written comments on the Project may be sent to Ms. Liana Reilly, NEPA Document Manager, Western Area Power Administration, P.O. Box 281213, Lakewood, CO 80228–8213 or

sent by email to *QuartzsiteSolarEIS@wapa.gov.* Copies of the DEIS and proposed RMP amendment are available on the Western and BLM Project Web sites: *http://www.wapa.gov/transmission/quartzsitesolar.htm* and *http://www.blm.gov/az/st/en/prog/energy/solar/quartzsite_solar_energy.html.* Copies of the document are also available at the BLM Yuma Field Office, 2555 East Gila Ridge Road, Yuma, AZ 85365 and at the BLM Arizona State Office, One North Central Avenue, Phoenix, AZ 85004.

Before including your address, phone number, or email address in your comment, you should be aware that your entire comment may be made publicly available at any time. While you can ask us in your comment to withhold your information from public review, we cannot guarantee that we will be able to do so.

FOR FURTHER INFORMATION CONTACT: For information on the proposed Project, the EIS and general information about Western's transmission system, contact Ms. Liana Reilly, Western NEPA Document Manager, at (720) 962–7253 or the address provided above. Parties wishing to be placed on the Project mailing list for future information and to receive copies of the document should also contact Ms. Reilly. For general information on the DOE NEPA process, please contact Ms. Carol M. Borgstrom, Director, Office of NEPA Policy and Compliance (GC–54), U.S. Department of Energy, 1000 Independence Avenue SW., Washington, DC 20585, telephone (202) 586–4600 or (800) 472–2756. For information on BLM's role with the Project or the proposed RMP Amendment, contact Mr. Eddie Arreola, Supervisory Project Manager, (602) 417–9505, One North Central Avenue, Phoenix, AZ 85004 or *Quatzsite_solar@blm.gov.*

SUPPLEMENTARY INFORMATION: A Notice of Intent (NOI) to Prepare an EIS for the proposed Project in La Paz County was published in the **Federal Register** on January 14, 2010 (75 FR 2133). Western and BLM held public scoping meetings in Yuma, Arizona, on January 26, 2010, in Parker, Arizona, on January 27, 2010 and in Quartzsite, Arizona, on January 28, 2010. The formal scoping period ended February 16, 2010. A NOI for the proposed RMP amendment was published in the **Federal Register** on March 30, 2011 (76 FR 17668). Scoping meetings for the proposed RMP amendment were held by BLM in Yuma, Arizona, on April 18, 2011, and in Quartzsite, Arizona, on April 19, 2011. The formal scoping period for the proposed RMP amendment closed on April 29, 2011. Comments received during the scoping periods were considered in preparing the DEIS.

Proposed Project

The proposed Project is a 100-megawatt solar electric power plant that would use concentrating solar power technology to capture the sun's heat to make steam, which would power traditional steam turbine generators. The solar generation facility would contain the central receiver or tower, a solar field consisting of mirrors or heliostats to reflect the sun's energy to the central tower, a conventional steam turbine generator, insulated storage tanks for hot and cold liquid salt, ancillary tanks, evaporation ponds, a temporary construction laydown area, technical and non-technical buildings, transformers and a 161/230-kilovolt (kV) electrical substation, roads, and water wells. All Project components would be located on BLM-managed land. Quartzsite Solar Energy, LLC (QSE) has applied to Western to interconnect the proposed Project to Western's transmission system. A new 1.5-mile long 161/230-kV generator tie-line would extend from the southern boundary of the solar facility boundary to a new switchyard to be constructed adjacent to Western's existing Bouse-Kofa 161-kV transmission line. The switchyard would be on BLM-managed land and would be owned and operated by Western.

QSE has submitted a right-of-way (ROW) application to the BLM for the Project. The ROW application is for a total of 26,273 acres, of which 1,675 acres would be utilized for the final Project ROW if approved. The Project site is in an undeveloped area in La Paz County, Arizona, east of State Route (SR) 95, approximately 10 miles north of Quartzsite, Arizona, on lands managed by the BLM.

Agency Purpose and Need

Western's purpose and need for the Project is to respond to QSE's interconnection request in accordance with Western's Open Access Transmission Tariff. The BLM's purpose and need for the Project is to respond to QSE's application for a ROW under Title V of FLPMA (43 U.S.C. 1761) to construct, operate, and decommission the solar facility, 161/230-kV collector line and access road, and also to respond to Western's application for a switchyard, and fiber optic line on public lands administered by the BLM.

Proposed Agency Actions

Western's proposed action is to interconnect the proposed Project to Western's existing Bouse-Kofa 161-kV transmission line. As part of Western's proposed action, Western would also construct, operate and maintain the new switchyard and would establish either a fiber optic or microwave telecommunications point. In addition to responding to the project ROW applications analyzed in the EIS, BLM is also considering amending the Yuma RMP. The Yuma RMP recognizes the compatibility of solar generation facilities on public lands, but requires that such activities conform to designated visual resource management (VRM) classes.

Alternatives

The DEIS analyzes two Project alternatives, a dry-cooling technology and a hybrid cooling technology. The DEIS also analyzes the proposed RMP amendment to change approximately 6,800 acres of VRM Class III to VRM Class IV with a project approval, the proposed plan amendment without project approval, and a no action alternative. For the proposed amendment, BLM's preferred alternative is to amend the Yuma RMP. BLM has not identified a preferred alternative for the proposed project.

As required under NEPA, the DEIS analyzes the following no action alternatives: Western would deny the interconnection request and the BLM would either (1) decline to amend the Yuma RMP and deny the project proposal; or (2) amend the Yuma RMP to change the VRM management classification but deny the project proposal.

For purposes of NEPA compliance, Western is serving as the lead Federal agency with BLM acting as a cooperating agency. The DEIS analyzes site-specific impacts on air quality, biological resources, recreation, cultural resources, water resources, geological resources and hazards, hazardous materials handling, land use, noise, paleontological resources, public health, socioeconomics, soils, traffic and transportation, visual resources, waste management, and worker safety and fire protection, as well as facility design engineering, efficiency, reliability, transmission system engineering, and transmission line safety and nuisance.

Western and BLM welcome public comments on the DEIS and proposed RMP amendment.

Dated: October 19, 2011.

Timothy J. Meeks,

Administrator.

[FR Doc. 2011–29146 Filed 11–9–11; 8:45 am]

BILLING CODE 6450–01–P

ENVIRONMENTAL PROTECTION AGENCY

[EPA–HQ–OECA–2011–0210; FRL–9490–4]

Agency Information Collection Activities; Submission to OMB for Review and Approval; Comment Request; NSPS for Municipal Waste Combustors (Renewal)

AGENCY: Environmental Protection Agency (EPA).

ACTION: Notice.

SUMMARY: In compliance with the Paperwork Reduction Act (44 U.S.C. 3501 *et seq.*), this document announces that an Information Collection Request (ICR) has been forwarded to the Office of Management and Budget (OMB) for review and approval. This is a request to renew an existing approved collection. The ICR which is abstracted below describes the nature of the collection and the estimated burden and cost.

DATES: Additional comments may be submitted on or before December 12, 2011.

ADDRESSES: Submit your comments, referencing docket ID number EPA–HQ–OECA–2011–0210, to (1) EPA online using www.regulations.gov (our preferred method), or by email to *docket.oeca@epa.gov,* or by mail to: EPA Docket Center (EPA/DC), Environmental Protection Agency, Enforcement and Compliance Docket and Information Center, mail code 2822IT, 1200 Pennsylvania Avenue NW., Washington, DC 20460; and (2) OMB at: Office of Information and Regulatory Affairs, Office of Management and Budget (OMB), Attention: Desk Officer for EPA, 725 17th Street NW., Washington, DC 20503.

FOR FURTHER INFORMATION CONTACT: Learia Williams, Monitoring, Assistance, and Media Programs Division, Office of Compliance, Mail Code 2223A, Environmental Protection Agency, 1200 Pennsylvania Avenue NW., Washington, DC 20460; telephone number: (202) 564–4113; fax number: (202) 564–0050; email address: *williams.learia@epa.gov.*

SUPPLEMENTARY INFORMATION: EPA has submitted the following ICR to OMB for review and approval according to the procedures prescribed in 5 CFR 1320.12. On May 9, 2011 (76 FR 26900), EPA sought comments on this ICR pursuant to 5 CFR 1320.8(d). EPA received no comments. Any additional comments on this ICR should be submitted to both EPA and OMB within 30 days of this notice.

EPA has established a public docket for this ICR under docket ID number EPA–HQ–OECA–2011–0210, which is available for public viewing online at *http://www.regulations.gov,* or in person viewing at the Enforcement and Compliance Docket in the EPA Docket Center (EPA/DC), EPA West, Room 3334, 1301 Constitution Avenue NW., Washington, DC The EPA Docket Center Public Reading Room is open from 8:30 a.m. to 4:30 p.m., Monday through Friday, excluding legal holidays. The telephone number for the Reading Room is (202) 566–1744, and the telephone number for the Enforcement and Compliance Docket is (202) 566–1752.

Use EPA's electronic docket and comment system at *http://www.regulations.gov* to submit or view public comments, access the index listing of the contents of the docket and to either access those documents in the docket that are available electronically. Once in the system, select ''docket search,'' then key in the docket ID number identified above. Please note that EPA's policy is that public comments, whether submitted electronically or in paper, will be made available for public viewing at *http://www.regulations.gov* as EPA receives them and without change, unless the comment contains copyrighted material, Confidential Business Information (CBI), or other information whose public disclosure is restricted by statute. For further information about the electronic docket, go to *www.regulations.gov.*

Title: NSPS for Municipal Waste Combustors (Renewal).

ICR Numbers: EPA ICR Number 1506.12, OMB Control Number 2060–0210.

ICR Status: This ICR is scheduled to expire on December 31, 2011. Under OMB regulations, the Agency may continue to conduct or sponsor the collection of information while this submission is pending at OMB.

Abstract: The New Source Performance Standards (NSPS) for Municipal Waste Combustors apply to municipal waste combustors with unit capacities greater than 225 megagrams per day. Owners or operators of the affected facilities must make one-time-only notifications and reports and must keep records of all facilities subject to NSPS requirements. Owners or operators are also required to maintain records of the occurrence and duration of any startup, shutdown, or malfunction in the operation of an affected facility, or any period during which the monitoring system is inoperative. The pollutants of concern for subpart Ea are metals, municipal waste combustor (MWC) organics, MWC acid gases, and nitrogen oxides. In subpart Eb, the additional pollutants of concern are cadmium (Cd), lead (Pb), and mercury (Hg). Subparts Ea and Eb require owners and operators with unit capacity above 225 megagrams per day to notify the Agency of intent to construct and initiate operation of a new, modified, or reconstructed MWC. The notification must contain supporting information regarding unit design capacity, the calculations used to determine capacity, and estimated startup dates.

Owners and operators must submit semiannual and annual compliance reports. In addition, facilities subject to subpart Eb are required to keep records of the weekly amount of carbon used for activated carbon injection and to calculate the estimated hourly carbon injection rate for hours of operation as a means of determining continuous compliance for Hg. Annual reports of excess emissions are required under subpart Ea, while semiannual reports of excess emissions are required under subpart Eb. These notifications, reports, and records are essential in determining compliance and are required, in general, of all sources subject to the standard.

Any owner or operator subject to subpart Ea will maintain a file of these measurements, and retain the file for at least two years. For those facilities subject to subpart Eb, all records are required to be maintained at the source for a period of five years.

Notifications are used to inform the Agency or delegated authority when a source becomes subject to the standard. The reviewing authority may then inspect the source to check if the pollution control devices are properly installed and operated and that the standard is being met. Performance test reports are needed as these are the Agency's records of a source's initial capability to comply with the emission standards, and serve as a record of the operating conditions under which compliance was achieved. The information generated by monitoring, recordkeeping, and reporting requirements described in this ICR is used by the Agency to ensure that facilities affected by the standard continue to operate the control equipment and achieve continuous compliance with the regulation.

All reports are sent to the delegated state or local authority. In the event that

there is no such delegated authority, the reports are sent directly to the EPA regional office. This information is being collected to assure compliance with 40 CFR part 60, subparts Ea and Eb, as authorized in section 112 and 114(a) of the Clean Air Act. The required information consists of emissions data and other information that have been determined to be private.

An agency may not conduct or sponsor, and a person is not required to respond to, a collection of information unless it displays a currently valid OMB Control Number. The OMB Control Numbers for the EPA regulations are listed in 40 CFR part 9 and 48 CFR chapter 15, and are identified on the form and/or instrument, if applicable.

Burden Statement: The annual public reporting and recordkeeping burden for this collection of information is estimated to average 198 hours per response. Burden means the total time, effort, or financial resources expended by persons to generate, maintain, retain, or disclose or provide information to or for a Federal agency. This includes the time needed to review instructions; develop, acquire, install, and utilize technology and systems for the purposes of collecting, validating, and verifying information, processing and maintaining information, and disclosing and providing information; adjust the existing ways to comply with any previously applicable instructions and requirements which have subsequently changed; train personnel to be able to respond to a collection of information; search data sources; complete and review the collection of information; and transmit or otherwise disclose the information.

Respondents/Affected Entities: Municipal waste combustors.

Estimated Number of Respondents: 12.

Frequency of Response: Initially, quarterly, annually, and semiannually.

Estimated Total Annual Hour Burden: 20,421.

Estimated Total Annual Cost: $1,916,503, which includes $1,757,811 in labor costs, $60,000 in capital/startup costs, and $98,692 in operation and maintenance (O&M) costs.

Changes in the Estimates: There is no change in the labor hours or cost in this ICR compared to the previous ICR. This is due to two considerations: (1) The regulations have not changed over the past three years and are not anticipated to change over the next three years; and (2) the growth rate for the industry is very low, negative, or non-existent, so there is no significant change in the overall burden. There is, however, an increase in the estimated burden cost as currently identified in the OMB Inventory of approved Burdens. The increase is not due to any program changes. The change in burden cost is due to the use of the most updated labor rates.

Since there are no changes in the regulatory requirements and there is no significant industry growth, the labor hours from the previous ICR are used in this ICR.

Dated: November 4, 2011.

John Moses,

Director, Collection Strategies Division.

[FR Doc. 2011–29186 Filed 11–9–11; 8:45 am]

BILLING CODE 6560–50–P

ENVIRONMENTAL PROTECTION AGENCY

[AMS–FRL–9490–7]

California State Motor Vehicle Pollution Control Standards; Amendments to the California Heavy-Duty Engine On-Board Diagnostic Regulation; Waiver Request; Opportunity for Public Hearing

AGENCY: Environmental Protection Agency (EPA).

ACTION: Notice of Opportunity for Public Hearing and Comment.

SUMMARY: The California Air Resources Board (CARB) has notified EPA that it has adopted amendments to its regulations related to heavy-duty engine on-board diagnostic (HD OBD) in California. By letter dated September 27, 2010, CARB requested that EPA confirm that its amendments are within-the-scope of a previous waiver of preemption issued by EPA. In the alternative, CARB requested that EPA confirm that the amendments that relax and clarify the existing HD OBD regulation are within-the-scope of a previous waiver of preemption issued by EPA and that EPA grant a new waiver of preemption for the remainder of CARB's HD OBD amendments. This notice announces that EPA has tentatively scheduled a public hearing concerning California's request and that EPA is accepting written comment on the request.

DATES: EPA has tentatively scheduled a public hearing concerning CARB's request on December 12, 2011 at 10 a.m. EPA will hold a hearing only if any party notifies EPA by November 25, 2011, expressing its interest in presenting oral testimony. By December 1, 2011, any person who plans to attend the hearing may call David Dickinson at (202) 343–9256 to learn if a hearing will be held or may check the following Web site for an update: *http://www.epa.gov/otaq/cafr.htm*.

Parties wishing to present oral testimony at the public hearing should also provide written notice to David Dickinson at the address noted below. If EPA receives a request for a public hearing, that hearing will be held at 1310 L St. NW., Washington, DC 20005. If EPA does not receive a request for a public hearing, then EPA will not hold a hearing, and instead consider CARB's request based on written submissions to the docket. Any party may submit written comments by January 9, 2012.

ADDRESSES: EPA will make available for public inspection materials submitted by CARB, written comments received from interested parties, and any testimony given at the public hearing. Materials relevant to this proceeding are contained in the Air and Radiation Docket and Information Center, maintained in Docket No. EPA–HQ–OAR–2011–0816. The docket is located at The Air Docket, Room 3334, 1301 Constitution Avenue NW., Washington, DC 20460, and may be viewed between 8 a.m., and 5:30 p.m., Monday through Friday. The telephone is (202) 566–1742. A reasonable fee may be charged by EPA for copying docket material.

Additionally, an electronic version of the public docket is available through the Federal government's electronic public docket and comment system. You may access EPA dockets at *http://www.regulations.gov*. After opening the *http://www.regulations.gov* Web site, enter EPA–HQ–OAR–2011–0816 in ''Search Documents'' to view documents in the record. Although a part of the official docket, the public docket does not include Confidential Business Information (CBI) or other information whose disclosure is restricted by statute.

FOR FURTHER INFORMATION CONTACT: David Dickinson, Compliance Division (6405J), U.S. Environmental Protection Agency, 1200 Pennsylvania Ave. NW., Washington, DC 20460. *Telephone:* (202) 343–9256, *Fax:* (202) 343–2804, *email address: Dickinson.David@epa.gov*.

SUPPLEMENTARY INFORMATION:

(A) Procedural History

CARB initially adopted the HD OBD requirements in December 2005, and EPA issued a waiver of preemption in August 2008.[1] CARB's HD OBD regulation, as initially adopted, required manufacturers to install a fully compliant HD OBD system on both

[1] The EPA decision was signed on August 13, 2008 and published at 73 FR 52042 (September 8, 2008).

diesel and gasoline powered heavy-duty engines (engines used in vehicles having a gross vehicle weight rating greater than 14,000 pounds). The requirements are phased in on a single engine family for model years 2010 through 2012 before requiring manufacturers to incorporate fully compliant HD OBD systems on all 2013 and later model year engines.

CARB adopted amendments to its HD OBD regulation along with a new HD OBD enforcement regulation on April 5, 2010.[2] In amending the HD OBD regulation CARB, among other provisions, relaxed the malfunction thresholds until 2013 model year for three major emission controls: PM filters, NO_X catalysts, and NO_X sensors. The amendments also delay certain monitoring requirements, including those that apply to catalyst-based components, until 2013. CARB further amended the regulation to expand the monitoring requirements for EGR and boost control system strategies.

By letter dated September 27, 2010, CARB requested that EPA confirm that amendments to its HD OBD regulations are within-the-scope of a previous waiver of preemption issued by EPA.[3] In the alternative, CARB requested that EPA confirm that the amendments that relax and clarify the existing HD OBD regulation (*e.g.* the major emission control monitoring requirements noted above) are within-the-scope of EPA's previous HD OBD waiver of preemption. Under this alternative request, CARB seeks a new waiver of preemption for the remainder of CARB's HD OBD amendments.

(B) Background and Discussion

Section 209(a) of the Clean Air Act, as amended (Act), 42 U.S.C. 7543(a), provides:

> No state or any political subdivision thereof shall adopt or attempt to enforce any standard relating to the control of emissions from new motor vehicles or new motor vehicle engines subject to this part. No state shall require certification, inspection or any other approval relating to the control of emissions from any new motor vehicle or new motor vehicle engine as condition precedent to the initial retail sale, titling (if any), or registration of such motor vehicle, motor vehicle engine, or equipment.

Section 209(b)(1) of the Act requires the Administrator, after notice and opportunity for public hearing, to waive application of the prohibitions of section 209(a) for any state that has adopted standards (other than crankcase emission standards) for the control of emissions from new motor vehicles or new motor vehicle engines prior to March 30, 1966, if the state determines that the state standards will be, in the aggregate, at least as protective of public health and welfare as applicable Federal standards. California is the only state that is qualified to seek and receive a waiver under section 209(b). The Administrator must grant a waiver unless she finds that (A) the above-described ''protectiveness'' determination of the state is arbitrary and capricious, (B) the state does not need the state standard to meet compelling and extraordinary conditions, or (C) the state standards and accompanying enforcement procedures are not consistent with section 202(a) of the Act. EPA has previously stated that ''consistency with section 202(a)'' requires that California's standards must be technologically feasible within the lead time provided, given due consideration of costs, and that California and applicable Federal test procedures be consistent.

When EPA receives new waiver requests from CARB, EPA traditionally publishes a notice of opportunity for public hearing and comment and then, after the comment period has closed, publishes a notice of its decision in the **Federal Register**. In contrast, when EPA receives within-the-scope waiver requests from CARB, EPA usually publishes a notice of its decision in the **Federal Register** and concurrently invites public comment if an interested party is opposed to EPA's decision.

Although CARB has submitted a within-the-scope waiver request for its HD OBD amendments EPA invites comment on the following issues. First, should California's HD OBD amendments be considered under the within-the-scope criteria or should they be considered under the full waiver criteria? Second, to the extent that not all of the HD OBD amendments should be considered under the within-the-scope criteria, should the amendments identified by CARB (as part of its alternative request) be considered under the within-the-scope criteria? Third, to the extent that HD OBD amendments should be considered as a within-the-scope request, do such amendments meet the criteria for EPA to grant a within-the-scope confirmation? Specifically, do those amendments: (a) Undermine California's previous determination that its standards, in the aggregate, are at least as protective of pubic health and welfare as comparable Federal standards, (b) affect the consistency of California's requirements with section 202(a) of the Act, or (c) raise new issues affecting EPA's previous waiver determinations? Please also provide comments to address the full waiver analysis, in the event that EPA cannot confirm that CARB's HD OBD amendments are within-the-scope of previous waivers. The full waiver analysis, which we are requesting comment on, includes consideration of the following three criteria: Whether (a) CARB's determination that its standards, in the aggregate, are at least as protective of public health and welfare as applicable Federal standards is arbitrary and capricious, (b) California needs separate standards to meet compelling and extraordinary conditions, and (c) California's standards and accompanying enforcement procedures are consistent with section 202(a) of the Act.

Procedures for Public Participation: In recognition that public hearings are designed to give interested parties an opportunity to participate in this proceeding, there are no adverse parties as such. Statements by participants will not be subject to cross-examination by other participants without special approval by the presiding officer. The presiding officer is authorized to strike from the record statements that he or she deems irrelevant or repetitious and to impose reasonable time limits on the duration of the statement of any participant.

If a hearing is held, the Agency will make a verbatim record of the proceedings. Interested parties may arrange with the reporter at the hearing to obtain a copy of the transcript at their own expense. Regardless of whether a pubic hearing is held, EPA will keep the record open until January 9, 2012. Upon expiration of the comment period, the Administrator will render a decision of CARB's request based on the record of the public hearing, if any, relevant written submissions, and other information that she deems pertinent. All information will be available for inspection at the EPA Air Docket No. EPA–HQ–OAR–2011–0816.

Persons with comments containing proprietary information must distinguish such information from other comments to the greatest possible extent and label it as ''Confidential Business Information'' (CBI). If a person making comments wants EPA to base its decision in part on a submission labeled as CBI, then a non-confidential version of the document that summarizes the

[2] The California Office of Administrative Law approved the amendments and the new regulation on May 18, 2010. The HD OBD requirements, as adopted in 2005, included detailed certification requirements and production engine/vehicle evaluation testing. The amended regulations, at 13 CCR section 1971.5, includes additional in-use enforcement provisions.

[3] CARB's request letter can be found at EPA–HQ–OAR–2011–0816–0001. EPA's previous waiver is at 73 FR 52042 (September 8, 2008).

key data or information should be submitted for the public docket. To ensure that proprietary information is not inadvertently placed in the docket, submissions containing such information should be sent directly to the contact person listed above and not to the public docket. Information covered by a claim of confidentiality will be disclosed by EPA only to the extent allowed and by the procedures set forth in 40 CFR part 2. If no claim of confidentiality accompanies the submission when EPA receives it, EPA will make it available to the public without further notice to the person making comments.

Dated: November 4, 2011.

Margo Tsirigotis Oge,

Director, Office of Transportation and Air Quality, Office of Air and Radiation.

[FR Doc. 2011–29168 Filed 11–9–11; 8:45 am]

BILLING CODE 6560–50–P

ENVIRONMENTAL PROTECTION AGENCY

[ER–FRL–8999–9]

Environmental Impacts Statements; Notice of Availability

Responsible Agency: Office of Federal Activities, General Information (202) 564–1399 or *http://www.epa.gov/compliance/nepa/.* Weekly receipt of Environmental Impact Statements. Filed 10/31/2011 Through 11/04/2011 Pursuant to 40 CFR 1506.9.

Notice

Section 309(a) of the Clean Air Act requires that EPA make public its comments on EISs issued by other Federal agencies. EPA's comment letters on EIS are available at: *http://www.epa.gov/compliance/nepa/eisdata.html.*

EIS No. 20110375, Final EIS, USFS, AK, Coconino National Forest Travel Management Project, Proposes to Designate a System of Road and Motorized Travel, Implementation, Coconino and Yavapai County, AZ, *Review Period Ends:* 12/12/2011, *Contact:* Mike Dechter (928) 527–3416.

EIS No. 20110376, Final EIS, USFS, AZ, Pinaleno Ecosystem Restoration Project, Proposed On-the-Ground Treatments to Improve Forest Health and Improve or Protect Red Squirrel Habitat, Coronado National Forest, Graham County, AZ, *Review Period Ends:* 12/12/2011, *Contact:* Craig Wilcox (928) 348–1961.

EIS No. 20110377, Final EIS, NOAA, 00, Reef Fish Amendment 32, Gag—Rebuilding Plan, Annual Catch Limits, Management Measures, Red Grouper—Annual Catch Limits, Management Measures, Grouper Accountability Measures, Gulf of Mexico, *Review Period Ends:* 12/12/2011, *Contact:* Roy E. Crabtree (727) 824–5301.

EIS No. 20110378, Draft EIS, FHWA, LA, Tier 1—Baton Rouge Loop Toll Facility Project, Proposed as a 90 to 105 mile long Circumferential Controlled Access Free-Flow Toll Roadway with two new Mississippi River Crossings, in Parishes of Ascension, East Baton Rouge, Iberville, Livingston, and West Baton Rouge, LA, *Comment Period Ends:* 01/09/2012, *Contact:* Cark N, Highsmith (225) 757–7615.

EIS No. 20110379, Draft EIS, USN, HI, Basing of MV–22 and H–1 Aircraft in Support of III Marine Expeditionary Force (MEF) Elements, Construction and Renovation of Facilities to Accommodate and Maintain the Squadrons, HI, *Comment Period Ends:* 12/27/2011, *Contact:* John Bigay (808) 472–1196.

EIS No. 20110380, Second Draft Supplement, NRC, TN, Related to the Operation of Watts Bar Nuclear Plant Units 2, New and Updated Information, Operating License, Rhea County, TN, *Comment Period Ends:* 01/24/2012, *Contact:* Justin Poole (301) 415–2048.

EIS No. 20110381, Draft EIS, WAPA, AZ, Quartzsite Solar Energy Project and Proposed Yuma Field Office Resource Management Plan Amendment, Implementation, Right-of-Way Application to the BLM, La Paz County, AZ, *Comment Period Ends:* 02/08/2012, *Contact:* Liana Reilly (720) 962–7253.

EIS No. 20110382, Draft EIS, DOI, 00, Programmatic EIS—Outer Continental Shelf Oil and Gas Leasing Program—2012–2017 in Six Planning Area, Western, Central and Eastern Gulf of Mexico, Cook Inlet, the Beaufort Sea, and the Chukchi Sea, *Comment Period Ends:* 01/09/2012, *Contact:* James F. Bennett (703) 787–1660.

Amended Notices

EIS No. 20110332, Draft Supplement, USFS, MT, Montanore Project, Additional Information on Alternatives, Proposes to Construct a Copper and Silver Underground Mine and Associated Facilities, Including a New Transmission Line, Plan-of-Operation Permit, Kootenai National Forest, Sanders County, MT, *Comment Period Ends:* 12/21/2011, *Contact:* Lynn Hagarty (406) 283–7642, Revision to FR Notice Published 10/07/2011: Extending Comment Period from 11/21/2011 to 12/21/2011.

Dated: November 7, 2011.

Cliff Rader,

Acting Director, NEPA Compliance Division, Office of Federal Activities.

[FR Doc. 2011–29188 Filed 11–9–11; 8:45 am]

BILLING CODE 6560–50–P

ENVIRONMENTAL PROTECTION AGENCY

[FRL–9490–2]

Notice of Public Meeting of the Interagency Steering Committee on Radiation Standards

AGENCY: Environmental Protection Agency.

ACTION: Notice of Public Meeting.

SUMMARY: The Environmental Protection Agency (EPA) will host a meeting of the Interagency Steering Committee on Radiation Standards (ISCORS) on November 14, 2011, in Washington, DC. The purpose of ISCORS is to foster early resolution and coordination of regulatory issues associated with radiation standards. Agencies represented as members of ISCORS include the following: EPA; Nuclear Regulatory Commission; Department of Energy; Department of Defense; Department of Transportation; Department of Homeland Security; Department of Labor's Occupational Safety and Health Administration; and the Department of Health and Human Services. ISCORS meeting observer agencies include the Office of Science and Technology Policy, Office of Management and Budget, Defense Nuclear Facilities Safety Board, as well as representatives from both the States of Illinois and Pennsylvania. ISCORS maintains several objectives: Facilitate a consensus on allowable levels of radiation risk to the public and workers; promote consistent and scientifically sound risk assessment and risk management approaches in setting and implementing standards for occupational and public protection from ionizing radiation; promote completeness and coherence of Federal standards for radiation protection; and identify interagency radiation protection issues and coordinate their resolution. ISCORS meetings include presentations by the chairs of the subcommittees and discussions of current radiation protection issues. Committee meetings normally involve pre-decisional intra-governmental discussions and, as such, are normally not open for observation

by members of the public or media. This is the one ISCORS meeting out of four held each year that is open to all interested members of the public. There will be time on the agenda for members of the public to provide comments. Summaries of previous ISCORS meetings are available at the ISCORS Web site, *www.iscors.org.* The final agenda for the November 14th meeting will be posted on the Web site shortly before the meeting.

DATES: The meeting will be held on November 14, 2011, from 1 p.m. to 4 p.m.

ADDRESSES: The ISCORS meeting will be held in Room 152 at the EPA building located at 1310 L Street NW., in Washington, DC. Attendees are required to present a photo ID such as a government agency photo identification badge or valid driver's license. Visitors and their belongings will be screened by EPA security guards. Visitors must sign the visitors log at the security desk and will be issued a visitors badge by the security guards to gain access to the meeting.

FOR FURTHER INFORMATION CONTACT: Marisa Savoy, Radiation Protection Division, Office of Radiation and Indoor Air, Mailcode 6608J, Environmental Protection Agency, 1200 Pennsylvania Avenue NW., Washington, DC 20460; telephone (202) 343–9237; fax (202) 343–2302; email address *savoy.marisa@epa.gov.*

SUPPLEMENTARY INFORMATION: Pay parking is available for visitors at the Colonial parking lot next door in the garage of the Franklin Square building. Visitors can also ride metro to the McPherson Square (Blue and Orange Line) station and leave the station via the 14th Street exit. Walk two blocks north on 14th Street to L Street. Turn right at the corner of 14th and L Streets. EPA's 1310 L Street building is on the right towards the end of the block. Visit the ISCORS Web site, *www.iscors.org,* for more detailed information.

Dated: November 3, 2011.

Anna B. Duncan,

Acting Director, Office of Radiation and Indoor Air.

[FR Doc. 2011–29182 Filed 11–9–11; 8:45 am]

BILLING CODE 6560–50–P

ENVIRONMENTAL PROTECTION AGENCY

[FRL–9489–5]

Senior Executive Service Performance Review Board; Membership

AGENCY: Environmental Protection Agency.

ACTION: Notice.

SUMMARY: Notice is hereby given of the membership of the Environmental Protection Agency Performance Review Board for 2011.

FOR FURTHER INFORMATION CONTACT: Karen D. Higginbotham, Director, Executive Resources Division, 3606A, Office of Human Resources, Office of Administration and Resources Management, Environmental Protection Agency, 1200 Pennsylvania Avenue NW., Washington, DC 20460 (202) 564–7287.

SUPPLEMENTARY INFORMATION: Section 4314(c)(1) through (5) of Title 5, U.S.C., requires each agency to establish in accordance with regulations prescribed by the Office of Personnel Management, one or more SES performance review boards. This board shall review and evaluate the initial appraisal of a senior executive's performance by the supervisor, along with any recommendations to the appointment authority relative to the performance of the senior executive.

Members of the 2011 EPA Performance Review Board are:

William H. Benson, Director, Gulf Ecology Division, National Health and Environmental Effects Research Lab, Office of Research and Development.

Bruce Binder, Senior Associate Director for Grants Competition, Office of Grants and Debarment, Office of Administration and Resources Management.

David Bloom, Director, Office of Budget, Office of the Chief Financial Officer.

Barry N. Breen, Principal Deputy Assistant Administrator, Office of Solid Waste and Emergency Response.

Jeanette Brown, Director, Office of Small Business Programs, Office of the Administrator.

Rafael DeLeon (Ex-Officio), Director, Office of Civil Rights, Office of the Administrator.

Carl E. Edlund, Director, Multimedia Planning and Permitting Division, Region 6.

Robin Gonzalez, Director, Office of Information Analysis and Access, Office of Environmental Information.

Joan Harrigan-Farrelly, Director, Antimicrobials Division, Office of Chemical Safety and Pollution Prevention.

Karen D. Higginbotham (Ex-Officio), Director, Executive Resources Division, Office of Human Resources, Office of Administration and Resources Management.

Peter Jutro, Deputy Director for Policy, National Homeland Security Research Center, Office of Research and Development.

Ephraim King, Director, Office of Science and Technology, Office of Water.

Kimberly A. Lewis (Ex-Officio), Director, Office of Human Resources, Office of Administration and Resources Management.

Brenda Mallory, Principal Deputy General Counsel, Office of General Counsel.

Suzanne Murray, Regional Counsel, Region 6, Office of Enforcement and Compliance Assurance.

Denise B. Sirmons, Deputy Director, Office of Grants and Debarment, Office of Administration and Resources Management.

Cynthia Sonich-Mullin, Deputy Director, National Homeland Security Research Center—Cincinnati, Ohio, Office of Research and Development.

Michael M. Stahl, Deputy Assistant Administrator, Office of International and Tribal Affairs.

Panagiotis E. Tsirigotis, Director, Sector Policies and Programs Division—Research Triangle Park, Office of Air and Radiation.

Dated: November 4, 2011.

Craig E. Hooks,

Assistant Administrator, Administration and Resources Management.

[FR Doc. 2011–29185 Filed 11–9–11; 8:45 am]

BILLING CODE 6560–50–P

EQUAL EMPLOYMENT OPPORTUNITY COMMISSSION

Sunshine Act Notice

AGENCY HOLDING THE MEETING: Equal Employment Opportunity Commission.

DATE AND TIME: Wednesday, November 16, 2011, 8:30 a.m. Eastern Time.

PLACE: Commission Meeting Room on the First Floor of the EEOC Office, Building, 131 ''M'' Street NE., Washington, DC 20507.

STATUS: The meeting will be open to the public.

Matters To Be Considered:

Open Session

1. Announcement of Notation Votes,
2. Draft Final Regulation on Disparate Impact and Reasonable Factors Other Than Age Under the Age Discrimination in Employment Act, and
3. Overcoming Barriers to the Employment of Veterans with Disabilities.

Note: In accordance with the Sunshine Act, the meeting will be open to public observation of the Commission's

deliberations and voting. Seating is limited and it is suggested that visitors arrive 30 minutes before the meeting in order to be processed through security and escorted to the meeting room. (In addition to publishing notices on EEOC Commission meetings in the **Federal Register**, the Commission also provides information about Commission meetings on its Web site, eeoc.gov., and provides a recorded announcement a week in advance on future Commission sessions.)

Please telephone (202) 663–7100 (voice) and (202) 663–4074 (TTY) at any time for information on these meetings. The EEOC provides sign language interpretation and Communication Access Realtime Translation (CART) services at Commission meetings for the hearing impaired. Requests for other reasonable accommodations may be made by using the voice and TTY numbers listed above.

CONTACT PERSON FOR MORE INFORMATION: Stephen Llewellyn, Executive Officer on (202) 663–4070.

This notice issued November 7, 2011.

Stephen Llewellyn,

Executive Officer, Executive Secretariat.

[FR Doc. 2011–29262 Filed 11–8–11; 11:15 am]

BILLING CODE 6570–01–P

FEDERAL DEPOSIT INSURANCE CORPORATION

Sunshine Act Meeting

Pursuant to the provisions of the ''Government in the Sunshine Act'' (5 U.S.C. 552b), notice is hereby given that at 10 a.m. on Tuesday, November 8, 2011, the Board of Directors of the Federal Deposit Insurance Corporation met in closed session to consider matters related to the Corporation's supervision, corporate, and resolution activities.

In calling the meeting, the Board determined, on motion of Director Thomas J. Curry (Appointive), seconded by Director John G. Walsh (Acting Comptroller of the Currency), and concurred in by Acting Chairman Martin J. Gruenberg, that Corporation business required its consideration of the matters which were to be the subject of this meeting on less than seven days' notice to the public; that no earlier notice of the meeting was practicable; that the public interest did not require consideration of the matters in a meeting open to public observation; and that the matters could be considered in a closed meeting by authority of subsections (c)(4), (c)(6), (c)(8), (c)(9)(A)(ii), (c)(9)(B), and (c)(10) of the ''Government in the Sunshine Act'' (5 U.S.C. 552b(c)(4), (c)(6), (c)(8), (c)(9)(A)(ii), (c)(9)(B), and (c)(10)).

The meeting was held in the Board Room of the FDIC Building located at 550—17th Street NW., Washington, DC.

Dated: November 8, 2011.

Robert E. Feldman,

Executive Secretary, Federal Deposit Insurance Corporation.

[FR Doc. 2011–29280 Filed 11–8–11; 4:15 pm]

BILLING CODE P

FEDERAL ELECTION COMMISSION

Sunshine Act Notice

AGENCY: Federal Election Commission.

DATE AND TIME: Tuesday, November 15, 2011 at 10 a.m.

PLACE: 999 E Street, NW., Washington, DC

STATUS: This Meeting will be Closed to the Public.

Items To Be Discussed

Compliance matters pursuant to 2 U.S.C. 437g.

Audits conducted pursuant to 2 U.S.C. 437g, 438(b), and Title 26, U.S.C.

Matters concerning participation in civil actions or proceedings or arbitration.

Internal personnel rules and procedures or matters affecting a particular employee.

* * * * *

PERSON TO CONTACT FOR INFORMATION: Judith Ingram, Press Officer. *Telephone:* (202) 694–1220.

Shawn Woodhead Werth,

Secretary and Clerk of the Commission.

[FR Doc. 2011–29345 Filed 11–8–11; 4:15 pm]

BILLING CODE 6715–01–P

FEDERAL HOUSING FINANCE AGENCY

[No. 2011–N–12]

Federal Home Loan Bank Members Selected for Community Support Review

AGENCY: Federal Housing Finance Agency.

ACTION: Notice.

SUMMARY: The Federal Housing Finance Agency (FHFA) is announcing the Federal Home Loan Bank (Bank) members it has selected for the 2010 fourth round review cycle under the FHFA's community support requirements regulation. This notice also prescribes the deadline by which Bank members selected for review must submit Community Support Statements to FHFA.

DATES: Bank members selected for the review cycle under the FHFA's community support requirements regulation must submit completed Community Support Statements to FHFA on or before December 27, 2011.

ADDRESSES: Bank members selected for the 2010 fourth round review cycle under the FHFA's community support requirements regulation must submit completed Community Support Statements to FHFA either by hard-copy mail at the Federal Housing Finance Agency, Housing Mission and Goals, 1625 Eye Street NW., Washington, DC 20006, or by electronic mail at *hmgcommunitysupportprogram@fhfa.gov.*

FOR FURTHER INFORMATION CONTACT: Rona Richardson, Office Assistant, Housing Mission and Goals, Federal Housing Finance Agency, by telephone at (202) 408–2945, by electronic mail at *Rona.Richardson@FHFA.gov,* or by hard-copy mail at the Federal Housing Finance Agency, 1625 Eye Street NW., Washington, DC 20006.

SUPPLEMENTARY INFORMATION:

I. Selection for Community Support Review

Section 10(g)(1) of the Federal Home Loan Bank Act (Bank Act) requires FHFA to promulgate regulations establishing standards of community investment or service Bank members must meet in order to maintain access to long-term advances. *See* 12 U.S.C. 1430(g)(1). The regulations promulgated by FHFA must take into account factors such as the Bank member's performance under the Community Reinvestment Act of 1977 (CRA), 12 U.S.C. 2901 *et seq.,* and record of lending to first-time homebuyers. *See* 12 U.S.C. 1430(g)(2). Pursuant to section 10(g) of the Bank Act, FHFA has promulgated a community support requirements regulation that establishes standards a Bank member must meet in order to maintain access to long-term advances, and review criteria FHFA must apply in evaluating a member's community support performance. *See* 12 CFR part 1290. The regulation includes standards and criteria for the two statutory factors—CRA performance and record of lending to first-time homebuyers. 12 CFR 1290.3. Only members subject to the CRA must meet the CRA standard. 12 CFR 1290.3(b). All members, including those not subject to CRA, must meet the first-time homebuyer standard. 12 CFR 1290.3(c).

Under the rule, FHFA selects approximately one-eighth of the members in each Bank district for community support review each

calendar quarter. 12 CFR 1290.2(a). FHFA will not review an institution's community support performance until it has been a Bank member for at least one year. Selection for review is not, nor should it be construed as, any indication of either the financial condition or the community support performance of the member.

Each Bank member selected for review must complete a Community Support Statement and submit it to FHFA by the December 27, 2011 deadline prescribed in this notice. 12 CFR 1290.2(b)(1)(ii) and (c). On or before November 24, 2011, each Bank will notify the members in its district that have been selected for the 2010 fourth round community support review cycle that they must complete and submit to FHFA by the deadline a Community Support Statement. 12 CFR 1290.2(b)(2)(i). The member's Bank will provide a blank Community Support Statement Form (OMB No. 2590–0005), which also is available on the FHFA's Web site: *http://www.fhfa.gov/webfiles/2924/FHFAForm060.pdf.* Upon request, the member's Bank also will provide assistance in completing the Community Support Statement.

FHFA has selected the following members for the 2010 fourth round community support review cycle:

Federal Home Loan Bank of Boston—District 1

Union Savings Bank	Danbury	Connecticut
Jewett City Savings Bank	Jewett City	Connecticut
Naugatuck Valley Savings and Loan	Naugatuck	Connecticut
Newtown Savings Bank	Newtown	Connecticut
Fairfield County Bank	Ridgefield	Connecticut
First County Bank	Stamford	Connecticut
Patriot National Bank	Stamford	Connecticut
Dutch Point Credit Union	Wethersfield	Connecticut
Windsor Locks Federal Credit Union	Windsor Locks	Connecticut
Athol Credit Union	Athol	Massachusetts
Crescent Credit Union	Brockton	Massachusetts
Brookline Bank	Brookline	Massachusetts
North Cambridge Co-Operative Bank	Cambridge	Massachusetts
Cambridge Trust Company	Cambridge	Massachusetts
Canton Co-Operative Bank	Canton	Massachusetts
Meetinghouse Co-Operative Bank	Dorchester	Massachusetts
Edgartown National Bank	Edgartown	Massachusetts
Fidelity Co-Operative Bank	Fitchburg	Massachusetts
Greenfield Co-Operative Bank	Greenfield	Massachusetts
Haverhill Bank	Haverhill	Massachusetts
Leominster Credit Union	Leominster	Massachusetts
The Lowell Co-operative Bank	Lowell	Massachusetts
Marlborough Savings Bank	Marlborough	Massachusetts
Milford Federal Savings & Loan Association	Milford	Massachusetts
Natick Federal Savings Bank	Natick	Massachusetts
Institution Savings in Newburyport and its Vicinity	Newburyport	Massachusetts
Rockland Federal Credit Union	Rockland	Massachusetts
South Coastal Bank	Rockland	Massachusetts
The Cooperative Bank	Roslindale	Massachusetts
Salem Five Cents Savings Bank	Salem	Massachusetts
TAUPA Lithuanian Federal Credit Union	Boston	Massachusetts
Southbridge Credit Union	Southbridge	Massachusetts
Stoneham Savings Bank	Stoneham	Massachusetts
Country Bank for Savings	Ware	Massachusetts
Wellesley Bank	Wellesley	Massachusetts
Cape Cod Co-Operative Bank	Hyannis	Massachusetts
Northeast Bank	Lewiston	Maine
Bangor Savings Bank	Bangor	Maine
Bangor Federal Credit Union	Bangor	Maine
Bar Harbor Savings & Loan Association	Bar Harbor	Maine
York County Federal Credit Union	Sanford	Maine
Centrix Bank & Trust	Bedford	New Hampshire
Northway Bank	Berlin	New Hampshire
Profile Bank, FSB	Rochester	New Hampshire
Holy Rosary Regional Credit Union	Rochester	New Hampshire
BankNewport	Newport	Rhode Island
Greenwood Credit Union	Warwick	Rhode Island
The Brattleboro Savings and Loan Association	Brattleboro	Vermont

Federal Home Loan Bank of New York—District 2

Cape Bank	Cape May Court House	New Jersey
United Roosevelt Savings Bank	Carteret	New Jersey
Unity Bank	Clinton	New Jersey
First Constitution Bank	Cranbury	New Jersey
Delanco Federal Savings Bank	Delanco	New Jersey
Pinnacle Federal Credit Union	Edison	New Jersey
Columbia Bank	Fair Lawn	New Jersey

Haven Savings Bank	Hoboken	New Jersey
1st Bank of Sea Isle City	Sea Isle City	New Jersey
Union Center National Bank	Union	New Jersey
Manasquan Savings Bank	Wall Township	New Jersey
Wawel Savings Bank	Wallington	New Jersey
Crest Savings Bank	Wildwood Crest	New Jersey
The Bridgehampton National Bank	Bridgehampton	New York
Atlas Bank	Brooklyn	New York
Visions Federal Credit Union	Endicott	New York
Tompkins Trust Company	Ithaca	New York
First National Bank of Jeffersonville	Jeffersonville	New York
The National Union Bank of Kinderhook	Kinderhook	New York
Mid-Hudson Valley Federal Credit Union	Kingston	New York
Medina Savings & Loan Association	Medina	New York
Northeast Community Bank	New York	New York
Israel Discount Bank of New York	New York	New York
Emigrant Bank	New York	New York
NBT Bank, N.A	Norwich	New York
The Oneida Savings Bank	Oneida	New York
Suffolk County National Bank of Riverhead	Riverhead	New York
Sawyer Savings Bank	Saugerties	New York
Adirondack Bank	Utica	New York
Hometown Bank of the Hudson Valley	Walden	New York
First Central Savings Bank	Whitestone	New York
Banco Bilbao Vizcaya Argentaria Puerto Rico	San Juan	Puerto Rico

Federal Home Loan Bank of Pittsburgh—District 3

Ing Bank, FSB	Wilmington	Delaware
First National Bank of Wyoming	Wyoming	Delaware
American Bank	Allentown	Pennsylvania
Iron Workers Bank	Aston	Pennsylvania
National Penn Bank	Boyertown	Pennsylvania
Union Building and Loan Savings Bank	Bridgewater	Pennsylvania
Clearfield Bank & Trust	Clearfield	Pennsylvania
Centric Bank	Harrisburg	Pennsylvania
Indiana First Savings Bank	Indiana	Pennsylvania
The Jim Thorpe National Bank	Jim Thorpe	Pennsylvania
Manor Bank	Manor	Pennsylvania
Union Community Bank	Marietta	Pennsylvania
Riverview National Bank	Marysville	Pennsylvania
Standard Bank, PASB	Murrysville	Pennsylvania
Sb1 Federal Credit Union	Philadelphia	Pennsylvania
American Heritage Federal Credit Union	Philadelphia	Pennsylvania
Philadelphia Trust Company	Philadelphia	Pennsylvania
Customers Bank	Phoenixville	Pennsylvania
Brentwood Bank	Pittsburgh	Pennsylvania
PNC Bank, N.A	Pittsburgh	Pennsylvania
Allegheny Valley Bank of Pittsburgh	Pittsburgh	Pennsylvania
Franklin Security Bank	Plains	Pennsylvania
Somerset Trust Company	Somerset	Pennsylvania
Univest Bank and Trust Company	Souderton	Pennsylvania
Compass Savings Bank	Wilmerding	Pennsylvania
Sovereign Bank	Wyomissing	Pennsylvania
Hancock County Savings Bank, FSB	Chester	West Virginia
Citizens Bank of West Virginia	Elkins	West Virginia
MVB Bank, Inc	Fairmont	West Virginia
Fayette County National Bank	Fayetteville	West Virginia
The Bank of Romney	Romney	West Virginia
Progressive Bank, N.A	Wheeling	West Virginia

Federal Home Loan Bank of Atlanta—District 4

America's First Federal Credit Union	Birmingham	Alabama
First Educators Credit Union	Birmingham	Alabama
First Bank of Boaz	Boaz	Alabama
Town-country National Bank	Camden	Alabama
Coosa Pines Federal Credit Union	Childersburg	Alabama
EvaBank	Eva	Alabama
Escambia County Bank	Flomaton	Alabama
First Federal Bank	Fort Payne	Alabama
Traders & Farmers Bank	Haleyville	Alabama
City Bank of Hartford	Hartford	Alabama
Worthington Federal Bank	Huntsville	Alabama

Pinnacle Bank	Jasper	Alabama
Marion Bank and Trust Company	Marion	Alabama
Bank of Pine Hill	Pine Hill	Alabama
First Federal Bank, A FSB	Tuscaloosa	Alabama
Alabama Credit Union	Tuscaloosa	Alabama
AmeriFirst Bank	Union Springs	Alabama
Small Town Bank	Wedowee	Alabama
Bank of York	York	Alabama
Independence Federal Savings Bank	Washington	District of Columbia
Library of Congress Federal Credit Union	Washington	District of Columbia
Bank of Delmarva	Seaford	Delaware
First Southern Bank	Boca Raton	Florida
Platinum Bank	Brandon	Florida
Citizens Bank and Trust	Frostproof	Florida
Columbia Bank	Lake City	Florida
Pacific National Bank	Miami	Florida
City National Bank of Florida	Miami	Florida
Intercredit Bank, N.A	Miami	Florida
Northern Trust, National Association	Miami	Florida
Farmers and Merchants Bank	Monticello	Florida
The First National Bank of Mount Dora	Mount Dora	Florida
Fairwinds Credit Union	Orlando	Florida
Community Credit Union of Florida	Rockledge	Florida
Cornerstone Community Bank	St. Petersburg	Florida
Valrico State Bank	Valrico	Florida
Grand Bank & Trust of Florida	West Palm Beach	Florida
The Perkins State Bank	Williston	Florida
Albany Bank & Trust	Albany	Georgia
SunTrust Bank, Atlanta	Atlanta	Georgia
First Port City Bank	Bainbridge	Georgia
Peoples State Bank and Trust	Baxley	Georgia
Bank of Early	Blakely	Georgia
Tippins Bank and Trust Company	Claxton	Georgia
The Citizens Bank of Forsyth County	Cumming	Georgia
First Bank of Dalton	Dalton	Georgia
Alliance National Bank	Dalton	Georgia
Decatur First Bank	Decatur	Georgia
The Bank of Edison	Edison	Georgia
Colony Bank	Fitzgerald	Georgia
Community Banking Company of Fitzgerald	Fitzgerald	Georgia
Commercial Banking Company	Hahira	Georgia
Farmers State Bank	Lumpkin	Georgia
The Security State Bank	McRae	Georgia
First Bank of Coastal Georgia	Pembroke	Georgia
First Peoples Bank	Pine Mountain	Georgia
Citizens Bank of Washington County	Sandersville	Georgia
Bank of Hancock County	Sparta	Georgia
Thomas County Federal Savings & Loan Association	Thomasville	Georgia
Stephens Federal Bank	Toccoa	Georgia
Bank of Dade	Trenton	Georgia
Altamaha Bank & Trust Company	Uvalda	Georgia
Vidalia Federal Savings Bank	Vidalia	Georgia
Bank of Dooly	Vienna	Georgia
The Peoples Bank	Willacoochee	Georgia
Talbot State Bank	Woodland	Georgia
Harford Bank	Aberdeen	Maryland
Chesapeake Bank of Maryland	Baltimore	Maryland
Arundel Federal Savings Bank	Baltimore	Maryland
Rosedale Federal Savings & Loan Association	Baltimore	Maryland
Madison Square Federal Savings Bank	Baltimore	Maryland
Fairmount Bank	Baltimore	Maryland
Hopkins Federal Savings Bank	Baltimore	Maryland
Municipal Employees Credit Union of Baltimore	Baltimore	Maryland
Marriott Employees Federal Credit Union	Bethesda	Maryland
U.S. Postal Service Federal Credit Union	Clinton	Maryland
The Patapsco Bank	Dundalk	Maryland
OBA Bank	Germantown	Maryland
Community Bank of Tri-County	Waldorf	Maryland
Woodsboro Bank	Woodsboro	Maryland
Asheville Savings Bank	Asheville	North Carolina
Crescent State Bank	Cary	North Carolina
Charlotte Metro Credit Union	Charlotte	North Carolina
First Trust Bank	Charlotte	North Carolina
First Federal Bank	Dunn	North Carolina

North Carolina Community Federal Credit Union	Goldsboro	North Carolina
First FSB of Lincolnton	Lincolnton	North Carolina
Lumbee Guaranty Bank	Pembroke	North Carolina
N.C. Local Government Employees Federal Credit Union	Raleigh	North Carolina
Roanoke Valley Savings Bank, SSB	Roanoke Rapids	North Carolina
Roxboro Savings Bank, SSB	Roxboro	North Carolina
First South Bank	Washington	North Carolina
Truliant Federal Credit Union	Winston Salem	North Carolina
Abbeville Savings and Loan Association	Abbeville	South Carolina
The Conway National Bank	Conway	South Carolina
First Piedmont Federal Savings & Loan Association of Gaffney	Gaffney	South Carolina
South Carolina Telco Federal Credit Union	Greenville	South Carolina
Mutual Savings Bank	Hartsville	South Carolina
The Commercial Bank	Honea Path	South Carolina
Founders Federal Credit Union	Lancaster	South Carolina
First Community Bank, N.A	Lexington	South Carolina
Pee Dee Federal Savings Bank	Marion	South Carolina
South Carolina Federal Credit Union	North Charleston	South Carolina
Family Trust Federal Credit Union	Rock Hill	South Carolina
Oconee Federal Savings and Loan	Seneca	South Carolina
Seneca National Bank	Seneca	South Carolina
Community First Bank	Walhalla	South Carolina
Bank of Walterboro	Walterboro	South Carolina
Citizens Bank and Trust Company	Blackstone	Virginia
Monarch Bank	Chesapeake	Virginia
Cardinal Bank	Fairfax	Virginia
Alliance Bank Corporation	Fairfax	Virginia
Acacia Federal Savings Bank	Falls Church	Virginia
Virginia Savings Bank, FSB	Front Royal	Virginia
Virginia Community Bank	Louisa	Virginia
Martinsville First Savings Bank	Martinsville	Virginia
TowneBank	Portsmouth	Virginia
Millennium Bank, NA	Reston	Virginia
Partners Financial Federal Credit Union	Richmond	Virginia

Federal Home Loan Bank of Cincinnati—District 5

Home Federal Savings & Loan Association	Ashland	Kentucky
Kentucky Federal Savings & Loan Association	Covington	Kentucky
Casey County Bank	Liberty	Kentucky
Louisville Community Development	Louisville	Kentucky
Home Savings Bank, FSB	Ludlow	Kentucky
First Guaranty Bank	Martin	Kentucky
Bank of Maysville	Maysville	Kentucky
Hart County Bank and Trust	Munfordville	Kentucky
The Farmers Bank	Nicholasville	Kentucky
Independence Bank of Kentucky	Owensboro	Kentucky
First Security Bank of Owensboro	Owensboro	Kentucky
Owingsville Banking Company	Owingsville	Kentucky
Family Bank, FSB	Paintsville	Kentucky
Community Trust Bank, Inc	Pikeville	Kentucky
Madison Bank	Richmond	Kentucky
Cumberland Security Bank	Somerset	Kentucky
Citizens National Bank of Somerset	Somerset	Kentucky
Commercial Bank	West Liberty	Kentucky
Antwerp Exchange Bank	Antwerp	Ohio
Hocking Valley Bank	Athens	Ohio
Rockhold Brown & Company Bank	Bainbridge	Ohio
Citizens Federal Savings & Loan Association	Bellefontaine	Ohio
Citizens Bank Company	Beverly	Ohio
Mercer Savings Bank	Celina	Ohio
Cheviot Savings Bank	Cincinnati	Ohio
Cincinnati Federal Savings & Loan Association	Cincinnati	Ohio
The North Side Bank & Trust	Cincinnati	Ohio
The Home Loan Savings Bank	Coshocton	Ohio
The Covington Savings & Loan Association	Covington	Ohio
The Citizens Bank of De Graff	De Graff	Ohio
Midwest Community Federal Credit Union	Defiance	Ohio
First National Bank of Germantown	Germantown	Ohio
Chaco Credit Union, Incorporated	Hamilton	Ohio
The Hicksville Bank	Hicksville	Ohio
The Delaware County B&T Company	Lewis Center	Ohio
The Home Builders Association	Lynchburg	Ohio
The Bank of Magnolia Company	Magnolia	Ohio

The Citizens Savings Bank	Martins Ferry	Ohio
Peoples First Savings Bank	Mason	Ohio
Western Reserve Bank	Medina	Ohio
Bramble Savings Bank	Milford	Ohio
The Commercial & Savings Bank	Millersburg	Ohio
Peoples National Bank	New Lexington	Ohio
The First National Bank of Pandora	Pandora	Ohio
Century Bank, FSB	Parma	Ohio
Farmers Bank & Savings Company	Pomeroy	Ohio
The St. Henry Bank	Saint Henry	Ohio
The Arlington Bank	Upper Arlington	Ohio
The Commercial Savings Bank	Upper Sandusky	Ohio
First Citizens N.B. of Upper Sandusky	Upper Sandusky	Ohio
Versailles Savings and Loan Company	Versailles	Ohio
First National Bank of Waverly	Waverly	Ohio
Kemba Credit Union, Inc	West Chester	Ohio
Spring Valley Bank	Wyoming	Ohio
Home Savings and Loan Company	Youngstown	Ohio
Athens Federal Community Bank	Athens	Tennessee
People's Bank & Trust Company of Pickett	Byrdstown	Tennessee
Bank of Camden	Camden	Tennessee
Legends Bank	Clarksville	Tennessee
Fort Campbell Federal Credit Union	Clarksville	Tennessee
Greenfield Banking Company	Greenfield	Tennessee
First Peoples Bank of Tennessee	Jefferson City	Tennessee
Lawrenceburg Federal Bank, FSB	Lawrenceburg	Tennessee
Community Bank	Lexington	Tennessee
Union Bank & Trust Company	Livingston	Tennessee
BankTennessee	Memphis	Tennessee
City of Memphis Credit Union	Memphis	Tennessee
Farmers State Bank	Mountain City	Tennessee
Tennessee Credit Union	Nashville	Tennessee
Citizens Savings Bank & Trust Company	Nashville	Tennessee
First Trust & Savings Bank	Oneida	Tennessee
The First National Bank of Oneida	Oneida	Tennessee
Citizens Bank & Trust Company	Rutledge	Tennessee
The Bank of Waynesboro	Waynesboro	Tennessee

Federal Home Loan Bank of Indianapolis—District 6

Hoosier Heartland State Bank	Crawfordsville	Indiana
The Elberfeld State Bank	Elberfeld	Indiana
Forum Credit Union	Fishers	Indiana
Mutual Savings Bank	Franklin	Indiana
First Federal Savings & Loan Association of Hammond	Hammond	Indiana
The Lafayette Life Insurance Company	Lafayette	Indiana
Farmers State Bank	Lagrange	Indiana
West End Savings Bank	Richmond	Indiana
The Scott County State Bank	Scottsburg	Indiana
Communitywide Federal Credit Union	South Bend	Indiana
Indiana State University Federal Credit Union	Terre Haute	Indiana
Encompass Credit Union	Tipton	Indiana
Purdue Employees Federal Credit Union	West Lafayette	Indiana
TLC Community Credit Union	Adrian	Michigan
Sunrise Family Credit Union	Bay City	Michigan
Fidelity Bank	Dearborn	Michigan
First Independence Bank	Detroit	Michigan
Communicating Arts Credit Union	Detroit	Michigan
Michigan State University Federal Credit Union	East Lansing	Michigan
Northern Michigan Bank	Escanaba	Michigan
Citizens Bank	Flint	Michigan
Mercantile Bank of Michigan	Grand Rapids	Michigan
Lake Michigan Credit Union	Grand Rapids	Michigan
Northpointe Bank	Grand Rapids	Michigan
Mainstreet Savings Bank, FSB	Hastings	Michigan
The Bank of Holland	Holland	Michigan
Honor State Bank	Honor	Michigan
First National Bank & Trust Company of Iron Mountain	Iron Mountain	Michigan
Mayville State Bank	Mayville	Michigan
Wolverine Federal Savings & Loan Association	Midland	Michigan
Dow Chemical Employees Credit Union	Midland	Michigan
Northland Area Federal Credit Union	Oscoda	Michigan
Port Austin State Bank	Port Austin	Michigan
Sturgis Bank & Trust Company, FSB	Sturgis	Michigan

Federal Home Loan Bank of Chicago—District 7

Southeast National Bank	Moline	Illinois
Citizens National Bank of Albion	Albion	Illinois
Anna-Jonesboro National Bank	Anna	Illinois
Arcola First Bank	Arcola	Illinois
The First National Bank of Arenzville	Arenzville	Illinois
Ben Franklin Bank of Illinois	Arlington Heights	Illinois
West Central Bank	Ashland	Illinois
The Atlanta National Bank	Atlanta	Illinois
Scott State Bank	Bethany	Illinois
First State Bank of Bloomington	Bloomington	Illinois
Midland Federal Savings & Loan Association	Bridgeview	Illinois
First National Bank of Brookfield	Brookfield	Illinois
Farmers and Merchants State Bank of Bushnell	Bushnell	Illinois
Byron Bank	Byron	Illinois
First State Bank of Campbell Hill	Campbell Hill	Illinois
Carrollton Bank	Carrollton	Illinois
Bank of Chestnut	Chestnut	Illinois
Second Federal Savings & Loan Association of Chicago	Chicago	Illinois
Royal Savings Bank	Chicago	Illinois
Hoyne Savings Bank	Chicago	Illinois
Loomis Federal Savings & Loan Association	Chicago	Illinois
North Side Federal Savings & Loan Association of Chicago	Chicago	Illinois
Seaway Bank and Trust Company	Chicago	Illinois
American Metro Bank	Chicago	Illinois
Chicago Patrolmen's Federal Credit Union	Chicago	Illinois
MB Financial Bank, National Association	Chicago	Illinois
Central Federal Savings & Loan Association	Cicero	Illinois
Central State Bank	Clayton	Illinois
De Witt Savings Bank	Clinton	Illinois
First Collinsville Bank	Collinsville	Illinois
First United Bank	Crete	Illinois
Crystal Lake Bank & Trust Company, N.A	Crystal Lake	Illinois
Soy Capital Bank and Trust Company	Decatur	Illinois
Baxter Credit Union	Deerfield	Illinois
Better Banks	Dunlap	Illinois
Community First Bank	Fairview Heights	Illinois
Bank of Farmington	Farmington	Illinois
First State Bank of Forrest	Forrest	Illinois
Community State Bank	Galva	Illinois
The Gifford State Bank	Gifford	Illinois
Harvard Savings Bank	Harvard	Illinois
Premier Bank of Jacksonville	Jacksonville	Illinois
Joy State Bank	Joy	Illinois
First Trust Bank of Illinois	Kankakee	Illinois
First National Bank of Lagrange	Lagrange	Illinois
Exchange State Bank	Lanark	Illinois
The Lemont National Bank	Lemont	Illinois
State Bank of Lincoln	Lincoln	Illinois
Prairie Community Bank	Marengo	Illinois
The First National Bank	Mattoon	Illinois
A J Smith Federal Savings Bank	Midlothian	Illinois
Security Savings Bank	Monmouth	Illinois
Farmers State Bank & Trust Company	Mount Sterling	Illinois
First County Bank	New Baden	Illinois
Warren-Boynton State Bank	New Berlin	Illinois
The Peoples State Bank of Newton, Illinois	Newton	Illinois
The Old Exchange N.B. of Okawville	Okawville	Illinois
First Personal Bank	Orland Park	Illinois
Ottawa Savings Bank	Ottawa	Illinois
Peoples Bank & Trust	Pana	Illinois
State Bank of Paw Paw, Illinois	Paw Paw	Illinois
Farmers-Merchants National Bank of Paxton	Paxton	Illinois
Town and Country Bank of Quincy	Quincy	Illinois
Community State Bank of Rock Falls	Rock Falls	Illinois
Alpine Bank of Illinois	Rockford	Illinois
Rushville State Bank	Rushville	Illinois
AmericaUnited Bank and Trust Company USA	Schaumburg	Illinois
American Chartered Bank	Schaumburg	Illinois
State Bank of Speer	Speer	Illinois
Illini Bank	Springfield	Illinois
Tuscola National Bank	Tuscola	Illinois
Petefish, Skiles & Company	Virginia	Illinois

Community Bank	Winslow	Illinois
State Bank	Wonder Lake	Illinois
Portage County Bank	Almond	Wisconsin
Pioneer Bank	Auburndale	Wisconsin
First Bank of Baldwin	Baldwin	Wisconsin
Black River Country Bank	Black River Falls	Wisconsin
Bonduel State Bank	Bonduel	Wisconsin
Bank Mutual	Brown Deer	Wisconsin
Bank of Cashton	Cashton	Wisconsin
Farmers and Merchants Union Bank	Columbus	Wisconsin
Wisconsin Community Bank	Cottage Grove	Wisconsin
Cumberland Federal Bank, FSB	Cumberland	Wisconsin
Town Bank	Delafield	Wisconsin
Cornerstone Community Bank	Grafton	Wisconsin
Bay Bank	Green Bay	Wisconsin
Highland State Bank	Highland	Wisconsin
Park Bank	Holmen	Wisconsin
Security State Bank	Iron River	Wisconsin
East Wisconsin Savings Bank, S.A	Kaukauna	Wisconsin
The Greenwood's State Bank	Lake Mills	Wisconsin
First National Bank—Fox Valley	Menasha	Wisconsin
Bank of Milton	Milton	Wisconsin
Clare Bank, N.A	Platteville	Wisconsin
Mound City Bank	Platteville	Wisconsin
First National Bank of Platteville	Platteville	Wisconsin
The First National Bank of River Falls	River Falls	Wisconsin
Intercity State Bank	Schofield	Wisconsin
Community Bank & Trust	Sheboygan	Wisconsin
Bank of Sun Prairie	Sun Prairie	Wisconsin
Walworth State Bank	Walworth	Wisconsin
First Federal Savings Bank of Wisconsin	Waukesha	Wisconsin
KeySavings Bank	Wisconsin Rapids	Wisconsin
WoodTrust Bank, N.A	Wisconsin Rapids	Wisconsin
River Cities Bank	Wisconsin Rapids	Wisconsin

Federal Home Loan Bank of Des Moines—District 8

Landmands Bank	Audubon	Iowa
Commercial Savings Bank	Carroll	Iowa
Page County State Bank	Clarinda	Iowa
Linn County State Bank	Coggon	Iowa
Farmers Savings Bank	Colesburg	Iowa
Iowa Savings Bank	Carroll	Iowa
Okey-Vernon First National Bank	Corning	Iowa
Alliant Credit Union	Dubuque	Iowa
First National Bank in Fairfield	Fairfield	Iowa
Farmers Savings Bank	Fostoria	Iowa
Grinnell Mutual Reinsurance Company	Grinnell	Iowa
Security State Bank	Hubbard	Iowa
First State Bank of Mapleton	Mapleton	Iowa
Maxwell State Bank	Maxwell	Iowa
Bridge Community Bank	Mount Vernon	Iowa
State Bank & Trust Company	Nevada	Iowa
First Newton National Bank	Newton	Iowa
American State Bank	Osceola	Iowa
Panora State Bank	Panora	Iowa
Marion County State Bank	Pella	Iowa
Savings Bank	Primghar	Iowa
Readlyn Savings Bank	Readlyn	Iowa
Premier Bank	Rock Valley	Iowa
Home State Bank	Royal	Iowa
Iowa State Bank	Sac City	Iowa
Sanborn Savings Bank	Sanborn	Iowa
The State Bank	Spirit Lake	Iowa
The State Bank of Toledo	Toledo	Iowa
Iowa State Bank	Wapello	Iowa
Security State Bank	Waverly	Iowa
First State Bank	Webster City	Iowa
Freedom Financial Bank	West Des Moines	Iowa
Union State Bank	Winterset	Iowa
Farmers & Merchants State Bank	Winterset	Iowa
Altura State Bank	Altura	Minnesota
American National Bank of Minnesota	Baxter	Minnesota
First State Bank and Trust	Bayport	Minnesota

First National Bank Bemidji	Bemidji	Minnesota
F & M Bank Minnesota	Clarkfield	Minnesota
The First National Bank of Coleraine	Coleraine	Minnesota
Woodland Bank	Remer	Minnesota
Farmers State Bank of Dent	Dent	Minnesota
Northwestern Bank, N.A	Dilworth	Minnesota
Western National Bank	Duluth	Minnesota
Fidelity Bank	Edina	Minnesota
State Bank of Fairmont	Fairmont	Minnesota
Franklin State Bank	Franklin	Minnesota
Commerce Bank	Geneva	Minnesota
The First National Bank of Gilbert	Gilbert	Minnesota
Eagle Bank	Glenwood	Minnesota
First Southeast Bank	Harmony	Minnesota
Farmers State Bank of Hartland	Hartland	Minnesota
First Community Bank Lester Prairie	Lester Prairie	Minnesota
Center National Bank	Litchfield	Minnesota
Exchange State Bank	Hills	Minnesota
Northern Star Bank	Mankato	Minnesota
CornerStone State Bank	Montgomery	Minnesota
United Farmers & Merchants State Bank	Morris	Minnesota
Citizens State Bank Norwood Young America	Norwood Young America	Minnesota
Odin State Bank	Odin	Minnesota
PrinsBank	Prinsburg	Minnesota
Randall State Bank	Randall	Minnesota
Home Federal Savings Bank	Rochester	Minnesota
North Star Bank	Roseville	Minnesota
Unity Bank	Rush City	Minnesota
First State Bank Southwest	Pipestone	Minnesota
First Community Bank Silver Lake	Silver Lake	Minnesota
Integrity Bank Plus	Wabasso	Minnesota
Citizens State Bank of Waverly, Inc	Waverly	Minnesota
Wells Federal Bank, a Federal Savings Bank	Wells	Minnesota
St. Paul Postal Employees Credit Union	Woodbury	Minnesota
Worthington Federal Savings Bank, FSB	Worthington	Minnesota
Community First Bank	Appleton City	Missouri
First Missouri National Bank	Brookfield	Missouri
Carroll County Trust Company	Carrollton	Missouri
Investors National Bank	Chillicothe	Missouri
Chillicothe State Bank	Chillicothe	Missouri
Concordia Bank of Concordia	Concordia	Missouri
Ozarks Federal Savings and Loan Association	Farmington	Missouri
First State Community Bank	Farmington	Missouri
The Callaway Bank	Fulton	Missouri
Northland National Bank	Gladstone	Missouri
Bank Northwest	Hamilton	Missouri
HNB National Bank	Hannibal	Missouri
Eagle Bank & Trust Company of Missouri	Hillsboro	Missouri
Bank of Iberia	Iberia	Missouri
Lamar Bank and Trust Company	Lamar	Missouri
Summit Bank of Kansas City	Lee's Summit	Missouri
Legends Bank	Linn	Missouri
First National Bank	Malden	Missouri
Wood & Huston Bank	Marshall	Missouri
Community Bank of Marshall	Marshall	Missouri
The First National Bank of Audrain County	Mexico	Missouri
Peoples Bank of the Ozarks	Nixa	Missouri
First Midwest Bank of the Ozarks	Piedmont	Missouri
Peoples Savings Bank of Rhineland	Rhineland	Missouri
The State Bank	Richmond	Missouri
First State Bank of St. Charles, Missouri	Saint Charles	Missouri
Town & Country Bank	Salem	Missouri
Farmers State Bank, SB	Schell City	Missouri
Third National Bank	Sedalia	Missouri
Senath State Bank	Senath	Missouri
The Community Bank of Shell Knob	Shell Knob	Missouri
Old Missouri Bank	Springfield	Missouri
Midwest BankCentre	St. Louis	Missouri
Bank of Thayer	Thayer	Missouri
Quarry City Savings & Loan Association	Warrensburg	Missouri
First State Bank of Cando	Cando	North Dakota
Citizens State Bank—Midwest	Cavalier	North Dakota
U.S. Bank National Association, North Dakota	Fargo	North Dakota
Union State Bank of Fargo	Fargo	North Dakota

State Bank & Trust of Kenmare	Kenmare	North Dakota
Farmers and Merchants State Bank	Langdon	North Dakota
First Western Bank & Trust	Minot	North Dakota
Lakeside State Bank	New Town	North Dakota
McKenzie County Bank	Watford City	North Dakota
BankStar Financial	Elkton	South Dakota
Dakotaland Federal Credit Union	Huron	South Dakota
Home Federal Bank	Sioux Falls	South Dakota
Great Western Bank	Sioux Falls	South Dakota
First State Bank	Wilmot	South Dakota
First National Bank South Dakota	Yankton	South Dakota

Federal Home Loan Bank of Dallas—District 9

First Community Bank	Batesville	Arkansas
Farmers Bank & Trust Company	Blytheville	Arkansas
Centennial Bank	Conway	Arkansas
River Town Bank	Dardanelle	Arkansas
First Financial Bank	El Dorado	Arkansas
Fordyce Bank & Trust Company	Fordyce	Arkansas
Forrest City Bank, N.A	Forrest City	Arkansas
Benefit Bank	Ft. Smith	Arkansas
First State Bank of Northwest Arkansas	Huntsville	Arkansas
Simmons First Bank of South Arkansas	Lake Village	Arkansas
Allied Bank	Mulberry	Arkansas
First National Bank at Paris	Paris	Arkansas
Delta Trust & Bank	Parkdale	Arkansas
Pine Bluff National Bank	Pine Bluff	Arkansas
Simmons First Bank of Northwest Arkansas	Rogers	Arkansas
Red River Bank	Alexandria	Louisiana
E Federal Credit Union	Baton Rouge	Louisiana
Bank of Coushatta	Coushatta	Louisiana
St. Tammany Homestead Association	Covington	Louisiana
City Savings Bank & Trust Company	De Ridder	Louisiana
Teche Federal Bank	Franklin	Louisiana
Florida Parishes Bank	Hammond	Louisiana
Synergy Bank	Houma	Louisiana
Coastal Commerce Bank	Houma	Louisiana
Mutual Savings and Loan Association	Metairie	Louisiana
Eureka Homestead	Metairie	Louisiana
Hibernia Homestead Bank	New Orleans	Louisiana
Peoples Bank and Trust Company	New Roads	Louisiana
American Gateway Bank	Port Allen	Louisiana
Richland State Bank	Rayville	Louisiana
Bank of Ringgold	Ringgold	Louisiana
Bank of Ruston	Ruston	Louisiana
Bank of St. Francisville	St. Francisville	Louisiana
The Bank of Commerce	White Castle	Louisiana
Amory Federal Savings & Loan Association	Amory	Mississippi
Spirit Bank	Belmont	Mississippi
The Peoples Bank	Biloxi	Mississippi
Bank of Brookhaven	Brookhaven	Mississippi
The Cleveland State Bank	Cleveland	Mississippi
Commerce National Bank	Corinth	Mississippi
Bank of Holly Springs	Holly Springs	Mississippi
Britton & Koontz Bank, N.A	Natchez	Mississippi
Sycamore Bank	Senatobia	Mississippi
Mechanics Bank	Water Valley	Mississippi
First National Bank	Alamogordo	New Mexico
International Bank	Raton	New Mexico
Tucumcari Federal Savings & Loan Association	Tucumcari	New Mexico
First State Bank	Athens	Texas
Community Resource Credit Union	Baytown	Texas
Fannin Bank	Bonham	Texas
Texas Heritage Bank	Cross Plains	Texas
Zavala County Bank	Crystal City	Texas
NexBank, SSB	Dallas	Texas
Beal Bank, SSB	Dallas	Texas
Credit Union of Texas	Dallas	Texas
First United Bank	Dimmitt	Texas
First National Bank of Dublin	Dublin	Texas
Union State Bank	Florence	Texas
OmniAmerican Bank	Fort Worth	Texas
Security National Bank of Quanah	Frisco	Texas

Community Bank	Granbury	Texas
Community National Bank	Hondo	Texas
MetroBank, N.A	Houston	Texas
Central Bank	Houston	Texas
Reliance Standard Life Insurance Company	Houston	Texas
Southwestern National Bank	Houston	Texas
Austin Bank, Texas N.A	Jacksonville	Texas
Texas State Bank	Joaquin	Texas
Pinnacle Bank	Keene	Texas
First National Bank of Lake Jackson	Lake Jackson	Texas
First Federal Bank Littlefield, Texas	Littlefield	Texas
PlainsCapital Bank	Lubbock	Texas
The Mason National Bank	Mason	Texas
Mineola Community Bank, SSB	Mineola	Texas
First Financial Bank, N.A	Mineral Wells	Texas
The American National Bank Mt. Pleasant	Mount Pleasant	Texas
Commercial Bank of Texas, N.A.	Nacogdoches	Texas
Western National Bank	Odessa	Texas
Security Bank	Odessa	Texas
Orange Savings Bank, SSB	Orange	Texas
Lone Star National Bank	Pharr	Texas
South Padre Bank, N.A	South Padre	Texas
First Financial Bank, N.A	Southlake	Texas
Woodforest National Bank	The Woodlands	Texas
First National Bank of Trinity	Trinity	Texas
Citizens State Bank	Tyler	Texas
First National Bank of Bosque County	Valley Mills	Texas
First National Bank of Central Texas	Waco	Texas
Extraco Banks, N.A	Waco	Texas
Community Bank & Trust	Waco	Texas

Federal Home Loan Bank of Topeka—District 10

Premier Members Federal Credit Union	Boulder	Colorado
First National Bank, Cortez	Cortez	Colorado
Del Norte Savings & Loan Association	Del Norte	Colorado
Premier Bank—Denver, Colorado	Denver	Colorado
Citywide Banks—Aurora, Colorado	Denver	Colorado
Rocky Mountain Law Enforcement Federal Credit Union	Denver	Colorado
Bank of the San Juans	Durango	Colorado
Fort Morgan State Bank	Fort Morgan	Colorado
Points West Community Bank	Julesburg	Colorado
Kit Carson State Bank	Kit Carson	Colorado
The State Bank	La Junta	Colorado
Home State Bank	Loveland	Colorado
First Colorado National Bank	Paonia	Colorado
Home Savings Bank	Chanute	Kansas
Bank of Commerce	Chanute	Kansas
Farmers & Merchants Bank of Colby	Colby	Kansas
Legacy Bank	Colwich	Kansas
The State Bank of Conway Springs	Conway Springs	Kansas
Farmers and Drovers Bank	Council Grove	Kansas
Citizens State Bank & Trust Company	Ellsworth	Kansas
State Bank of Fredonia	Fredonia	Kansas
Gardner Bank	Gardner	Kansas
Community Bank of the Midwest	Great Bend	Kansas
The Halstead Bank	Halstead	Kansas
Security Bank of Kansas City	Kansas City	Kansas
Douglas County Bank	Lawrence	Kansas
National Bank of Kansas City	Leawood	Kansas
The Lyons State Bank	Lyons	Kansas
The Farmers State Bank	McPherson	Kansas
The Mission Bank	Mission	Kansas
Carson Bank	Mulvane	Kansas
The Farmers State Bank of Oakley	Oakley	Kansas
Valley View State Bank	Overland Park	Kansas
Citizens State Bank	Paola	Kansas
University Bank	Pittsburg	Kansas
Alliant Bank	Sedgwick	Kansas
TriCentury Bank	Simpson	Kansas
First Bank	Sterling	Kansas
The Valley State Bank	Syracuse	Kansas
The Tampa State Bank	Tampa	Kansas
Kaw Valley Bank	Topeka	Kansas

Community Bank	Topeka	Kansas
Chisholm Trail State Bank	Wichita	Kansas
Intrust Bank, National Association	Wichita	Kansas
Bank of the Valley	Bellwood	Nebraska
Bank of Bennington	Bennington	Nebraska
Washington County Bank	Blair	Nebraska
Custer Federal Savings & Loan Association	Broken Bow	Nebraska
First Central Bank	Cambridge	Nebraska
Citizens State Bank	Carleton	Nebraska
CerescoBank	Ceresco	Nebraska
First Bank and Trust Company	Cozad	Nebraska
Jefferson County Bank	Daykin	Nebraska
First National Bank in Exeter	Exeter	Nebraska
First State Bank	Farnam	Nebraska
First State Bank and Trust	Fremont	Nebraska
Gothenburg State Bank	Gothenburg	Nebraska
Five Points Bank of Hastings	Hastings	Nebraska
Henderson State Bank	Henderson	Nebraska
Farmers State Bank	Maywood	Nebraska
First Central Bank McCook, N.A	McCook	Nebraska
Farmers and Merchants Bank	Milligan	Nebraska
Centennial Bank	Omaha	Nebraska
First National Bank of Omaha	Omaha	Nebraska
The Potter State Bank of Potter	Potter	Nebraska
Peoples-Webster County Bank	Red Cloud	Nebraska
Citizens Bank of Ada	Ada	Oklahoma
The First National Bank in Altus	Altus	Oklahoma
The FNB and Trust Company of Broken Arrow	Broken Arrow	Oklahoma
Farmers Exchange Bank	Cherokee	Oklahoma
The First National Bank and Trust Company	Chickasha	Oklahoma
1st Bank Oklahoma	Claremore	Oklahoma
Kirkpatrick Bank	Edmond	Oklahoma
The Bank of Union	El Reno	Oklahoma
Bank of Western Oklahoma	Elk City	Oklahoma
Liberty Federal Savings Bank	Enid	Oklahoma
Fairview Savings & Loan Association	Fairview	Oklahoma
Stockmans Bank—Altus, OK	Gould	Oklahoma
Oklahoma State Bank	Guthrie	Oklahoma
The City NB&T Company of Guymon	Guymon	Oklahoma
The Bank of Kremlin	Kremlin	Oklahoma
Liberty National Bank	Lawton	Oklahoma
The Morris State Bank	Morris	Oklahoma
Oklahoma Educators Credit Union—Oklahoma	Oklahoma City	Oklahoma
First Security Bank and Trust Company	Oklahoma City	Oklahoma
Osage Federal Bank	Pawhuska	Oklahoma
NBC Bank	Pawhuska	Oklahoma
Exchange Bank and Trust Company	Perry	Oklahoma
The Central National Bank of Poteau	Poteau	Oklahoma
First Pryority Bank	Pryor	Oklahoma
Peoples Bank & Trust Company	Ryan	Oklahoma
InterBank	Sayre	Oklahoma
Southwest State Bank	Sentinel	Oklahoma
Advantage Bank	Spencer	Oklahoma
Bank of Commerce	Stilwell	Oklahoma
American Bank and Trust Company	Tulsa	Oklahoma
Security Bank	Tulsa	Oklahoma
Sooner State Bank	Tuttle	Oklahoma
First State Bank	Valliant	Oklahoma
First State Bank	Watonga	Oklahoma
Peoples Bank	Westville	Oklahoma
The Bank of Wyandotte	Wyandotte	Oklahoma
The Yukon National Bank	Yukon	Oklahoma

Federal Home Loan Bank of San Francisco—District 11

Los Angeles National Bank	Buena Park	California
Burbank City Federal Credit Union	Burbank	California
Pacific Trust Bank	Chula Vista	California
Financial Partners Credit Union	Downey	California
Centennial Bank	Fountain Valley	California
Murphy Bank	Fresno	California
USC Credit Union	Los Angeles	California
Heritage Oaks Bank	Paso Robles	California
Provident Credit Union	Redwood Shores	California

Provident Savings Bank	Riverside	California
Five Star Bank	Rocklin	California
First U.S. Community Credit Union	Sacramento	California
Neighborhood National Bank	San Diego	California
Bank of The Orient	San Francisco	California
Pacific Coast Bankers' Bank	San Francisco	California
Meriwest Credit Union	San Jose	California
Santa Cruz Community Credit Union	Santa Cruz	California
Bank of Stockton	Stockton	California
Universal Bank, FSB	West Covina	California
First Republic Bank	San Francisco	California
Pinnacle Bank (AZ)	Scottsdale	Arizona
Professional Business Bank	Pasadena	California
River City Bank	Sacramento	California
Royal Business Bank	Los Angeles	California
San Mateo Credit Union	Redwood City	California
Federal Home Loan Bank of Seattle—District 12		
Credit Union 1	Anchorage	Alaska
ANZ Guam, Inc	Agana	Guam
Panhandle State Bank	Sandpoint	Idaho
First Citizens Bank of Butte	Butte	Montana
Dutton State Bank	Dutton	Montana
Valley Bank of Glasgow	Glasgow	Montana
1st Liberty Federal Credit Union	Great Falls	Montana
Independence Bank	Havre	Montana
Manhattan Bank	Manhattan	Montana
First Security Bank of Missoula	Missoula	Montana
Community Bank-Missoula, Inc	Missoula	Montana
Community Bank, Inc.	Ronan	Montana
Basin State Bank	Stanford	Montana
Evergreen Federal Savings & Loan Association	Grants Pass	Oregon
Bank of Eastern Oregon	Heppner	Oregon
South Valley Bank & Trust	Klamath Falls	Oregon
USU Charter Federal Credit Union	Logan	Utah
Wells Fargo Bank Northwest, N.A	Salt Lake City	Utah
Franklin Templeton Bank & Trust, FSB	Salt Lake City	Utah
American Marine Bank	Bainbridge Island	Washington
Riverview Community Bank	Camas	Washington
The Bank of Washington	Edmonds	Washington
Fife Commercial Bank	Fife	Washington
Whidbey Island Bank	Oak Harbor	Washington
Olympia Federal Savings & Loan Association	Olympia	Washington
TwinStar Credit Union	Olympia	Washington
First Federal Savings & Loan Association of Port Angeles	Port Angeles	Washington
Seattle Bank	Seattle	Washington
Our Community Credit Union	Shelton	Washington
Western United Life Assurance Company	Spokane	Washington
Yakima Federal Savings & Loan Association	Yakima	Washington
Buffalo Federal Savings Bank	Buffalo	Wyoming
Hilltop National Bank	Casper	Wyoming
Tri-County Bank	Cheyenne	Wyoming
Big Horn Federal Savings Bank	Greybull	Wyoming
Oregon Trail Bank	Guernsey	Wyoming
Rocky Mountain Bank	Rock Springs	Wyoming
Rock Springs National Bank	Rock Springs	Wyoming
Pinnacle Bank—Wyoming	Torrington	Wyoming

II. Public Comments

To encourage the submission of public comments on the community support performance of Bank members, on or before November 24, 2011, each Bank will notify its Advisory Council and nonprofit housing developers, community groups, and other interested parties in its district of the members selected for community support review in the 2010 fourth round review cycle. 12 CFR 1290.2(b)(2)(ii). In reviewing a member for community support compliance, FHFA will consider any public comments it has received concerning the member. 12 CFR 1290.2(d). To ensure consideration by FHFA, comments concerning the community support performance of members selected for the 2010 fourth round review cycle must be delivered to FHFA, either by hard-copy mail at the Federal Housing Finance Agency, Housing Mission and Goals, 1625 Eye Street NW., Washington, DC 20006, or by electronic mail to *hmgcommunity supportprogram@fhfa.gov* on or before the December 27, 2011 deadline for submission of Community Support Statements.

Dated: November 4, 2011.

Edward J. DeMarco,

Acting Director, Federal Housing Finance Agency.

[FR Doc. 2011–29164 Filed 11–9–11; 8:45 am]

BILLING CODE 8070–01–P

FEDERAL MARITIME COMMISSION

Ocean Transportation Intermediary License; Revocation

The Federal Maritime Commission hereby gives notice that the following Ocean Transportation Intermediary licenses have been revoked pursuant to section 19 of the Shipping Act of 1984 (46 U.S.C. chapter 409) and the regulations of the Commission pertaining to the licensing of Ocean Transportation Intermediaries, 46 CFR part 515, effective on the corresponding date shown below:

License Number: 004505NF.
Name: Freight Masters Systems, International, Inc.
Address: 2629 Waterfront Parkway East Drive, Suite 300, Indianapolis, IN 46214.
Date Revoked: October 15, 2011.

License Number: 020624N.
Name: OTA Logistic Inc.
Address: 7300 Alondra Blvd., Suite 108, Paramount, CA 90723.
Date Revoked: October 21, 2011.

Sandra L. Kusumoto,

Director, Bureau of Certification and Licensing.

[FR Doc. 2011–29083 Filed 11–9–11; 8:45 am]

BILLING CODE 6730–01–P

FEDERAL MARITIME COMMISSION

Ocean Transportation Intermediary License; Reissuance

Notice is hereby given that the following Ocean Transportation Intermediary licenses have been reissued by the Federal Maritime Commission pursuant to section 19 of the Shipping Act of 1984 (46 U.S.C. chapter 409) and the regulations of the Commission pertaining to the licensing of Ocean Transportation Intermediaries, 46 CFR part 515.

License No.	Name/address	Date reissued
002391F	Silva, Leonel dba Best Forwarders, 411 North Oak Street, Inglewood, CA 90302	September 22, 2011.
019453N	La Onion Shipping Co., Inc., 1680 Jerome Avenue, Bronx, NY 10453	October 2, 2011.

Sandra L. Kusumoto,

Director, Bureau of Certification and Licensing.

[FR Doc. 2011–29085 Filed 11–9–11; 8:45 am]

BILLING CODE 6730–01–P

FEDERAL MARITIME COMMISSION

Ocean Transportation Intermediary License; Applicants

Notice is hereby given that the following applicants have filed with the Federal Maritime Commission an application for a license as a Non-Vessel-Operating Common Carrier (NVO) and/or Ocean Freight Forwarder (OFF)—Ocean Transportation Intermediary (OTI) pursuant to section 19 of the Shipping Act of 1984 as amended (46 U.S.C. chapter 409 and 46 CFR 515). Notice is also hereby given of the filing of applications to amend an existing OTI license or the Qualifying Individual (QI) for a license.

Interested persons may contact the Office of Transportation Intermediaries, Federal Maritime Commission, Washington, DC 20573, by telephone at (202) 523–5843 or by email at *OTI@fmc.gov.*

Accurate Cargo Services (NVO), 141 South 2nd Street, Montebello, CA 91640. Officer: Stephanie L. Kong, President/Secretary/Treasurer (Qualifying Individual). Application Type: New NVO License.

Alomar Transport, Inc. (NVO & OFF), 150–30 132nd Avenue, Suite 303, Jamaica, NY 11434. Officers: Patricia A. Lally, President (Qualifying Individual), Allaix Augustin, Secretary. Application Type: QI Change.

Enter To USA LLC (NVO & OFF), 1553 NW 82nd Avenue, Miami, FL 33126. Officers: Melissa O. Meier, Manager (Qualifying Individual), Julio A. Aniat, Manager. Application Type: New NVO & OFF License.

Forward System Logistics Inc. (NVO), 144–54 156th Street, Jamaica, NY 11434. Officers: Victor Leung, Secretary (Qualifying Individual), Jerry Lo, President/Treasurer. Application Type: QI Change.

G J Cargo Corp (NVO & OFF), 2000 NW 84 Avenue, #228, Miami, FL 33122. Officers: Carolina R. Jaramillo Saad, Vice President/Secretary (Qualifying Individual), German Jaramillo, President. Application Type: New NVO & OFF License.

Global Freight Express, L.L.C. (NVO), 8417 NW 68 Street, Miami, FL 33166. Officers: Isidro A. Castro, Manager (Qualifying Individual), Roza M. Castro, Manager. Application Type: New NVO License.

Green Line Shipping & Logistics Services Inc. (NVO & OFF), 16230 Lake View Lane, Apple Valley, CA 92307. Officer: Monwar Hussain, President (Qualifying Individual). Application Type: Name Change/Add NVO Service.

Investment Logistic Solution Corp (NVO & OFF), 6701 NW. 7th Street, #135, Miami, FL 33126. Officers: Maria E. Arias, Vice President (Qualifying Individual), Enid Gonzalez, President/Acting Secretary. Application Type: New NVO & OFF License.

I.T. Freight Corporation (NVO & OFF), 1970 NW 129 Avenue, Suite 105, Miami, FL 33182. Officers: Nicolas I. Cassis, Secretary (Qualifying Individual), Jorge Zambrano, President/Treasurer. Application Type: New NVO & OFF License.

Kamino International Transport, Inc. dba Kamino Ocean (NVO & OFF), 145th Avenue & Hook Creek Blvd., Valley Stream, NY 11581. Officers: Jeffrey Hudson, Vice President of Operations (Qualifying Individual), Robert Snelson, CEO/Director. Application Type: QI Change.

Kin Services, Inc. (OFF), 2027 Winwright Court, Palatine, IL 60074. Officers: Majetete Balanganayi, President (Qualifying Individual), Ngalula I. Balanganayi, Secretary. Application Type: New OFF License.

Linear Shipping, Inc. (NVO & OFF), 5919 Ridgeway Drive, Grand Prairie, TX 75052. Officer: Syed S. Rabi-ul-Hassan, President/Secretary/Treasurer (Qualifying Individual). Application Type: License Transfer.

Nunez Shipping Inc (NVO), 1388 NW 29th Street, Miami, FL 33142. Officers: Emigdio O. Nunez, Vice President (Qualifying Individual), Osvaldo Nunez, President. Application Type: New NVO License.

Priority Air Express, LLC dba Priority Marine Express dba Priority Solutions International (NVO & OFF), 11 Technology Drive, Suite A, Swedesboro, NJ 08085. Officers: Irina Freidel, Vice President (Qualifying

Individual), William Ciminello, Director/President. Application Type: QI Change.

Seafair USA, LLC. (NVO & OFF), 10813 NW 30 Street, Miami, FL 33172. Officers: Claudio R. Lopez, Managing Member (Qualifying Individual), Peter Doeschner, Member. Application Type: New NVO & OFF License.

Tazmanian Freight Forwarding, Inc. (NVO & OFF), 4949 Old Grayton Road, Cleveland, OH 44135. Officers: Jeffrey W. Schumacher, Vice President of International (Qualifying Individual), Robert D. Rossbach, Chief Executive Officer. Application Type: New NVO & OFF License.

Tecnoship Group, Corp. (NVO), 8233 NW 68 Street, Miami, FL 33166. Officers: Karla S. Guevara, Director (Qualifying Individual), Jose F. Rodriguez, President. Application Type: New NVO License.

Yes Logistics Corporation (NVO & OFF), 3675 E. Huntington Drive, Suite 210, Pasadena, CA 91107. Officers: John S. Hsi, Assistant Vice President, Frank Chao, Director/President (Qualifying Individual). Application Type: QI Change.

Dated: November 4, 2011.

Karen V. Gregory,

Secretary.

[FR Doc. 2011–29086 Filed 11–9–11; 8:45 am]

BILLING CODE 6730–01–P

FEDERAL RESERVE SYSTEM

Proposed Agency Information Collection Activities; Comment Request

AGENCY: Board of Governors of the Federal Reserve System.

SUMMARY: On June 15, 1984, the Office of Management and Budget (OMB) delegated to the Board of Governors of the Federal Reserve System (Board) its approval authority under the Paperwork Reduction Act (PRA), pursuant to 5 CFR 1320.16, to approve of and assign OMB control numbers to collection of information requests and requirements conducted or sponsored by the Board under conditions set forth in 5 CFR 1320 Appendix A.1. Board-approved collections of information are incorporated into the official OMB inventory of currently approved collections of information. Copies of the Paperwork Reduction Act Submission, supporting statements and approved collection of information instruments are placed into OMB's public docket files. The Federal Reserve may not conduct or sponsor, and the respondent is not required to respond to, an information collection that has been extended, revised, or implemented on or after October 1, 1995, unless it displays a currently valid OMB control number.

DATES: Comments must be submitted on or before January 9, 2012.

ADDRESSES: You may submit comments, identified by *FR 2320 or FR Y–8* by any of the following methods:

- *Agency Web Site: http://www.federalreserve.gov.* Follow the instructions for submitting comments at *http://www.federalreserve.gov/generalinfo/foia/ProposedRegs.cfm.*
- *Federal eRulemaking Portal: http://www.regulations.gov.* Follow the instructions for submitting comments.
- *Email: regs.comments@federalreserve.gov.* Include docket number in the subject line of the message.
- *Fax:* (202) 452–3819 or (202) 452–3102.
- *Mail:* Jennifer J. Johnson, Secretary, Board of Governors of the Federal Reserve System, 20th Street and Constitution Avenue NW., Washington, DC 20551.

All public comments are available from the Board's Web site at *www.federalreserve.gov/generalinfo/foia/ProposedRegs.cfm* as submitted, unless modified for technical reasons. Accordingly, your comments will not be edited to remove any identifying or contact information. Public comments may also be viewed electronically or in paper form in Room MP–500 of the Board's Martin Building (20th and C Streets, NW.) between 9 a.m. and 5 p.m. on weekdays.

Additionally, commenters should send a copy of their comments to the OMB Desk Officer—Shagufta Ahmed—Office of Information and Regulatory Affairs, Office of Management and Budget, New Executive Office Building, Room 10235, 725 17th Street NW., Washington, DC 20503 or by fax to (202) 395–6974.

FOR FURTHER INFORMATION CONTACT: A copy of the PRA OMB submission, including the proposed reporting form and instructions, supporting statement, and other documentation will be placed into OMB's public docket files, once approved. These documents will also be made available on the Federal Reserve Board's public Web site at: *http://www.federalreserve.gov/boarddocs/reportforms/review.cfm* or may be requested from the agency clearance officer, whose name appears below.

Federal Reserve Board Clearance Officer—Cynthia Ayouch—Division of Research and Statistics, Board of Governors of the Federal Reserve System, Washington, DC 20551, (202) 452–3829). Telecommunications Device for the Deaf (TDD) users may contact (202) 263–4869, Board of Governors of the Federal Reserve System, Washington, DC 20551.

SUPPLEMENTARY INFORMATION:

Request for Comment on Information Collection Proposals

The following information collections, which are being handled under this delegated authority, have received initial Board approval and are hereby published for comment. At the end of the comment period, the proposed information collections, along with an analysis of comments and recommendations received, will be submitted to the Board for final approval under OMB delegated authority. Comments are invited on the following:

a. Whether the proposed collection of information is necessary for the proper performance of the Federal Reserve's functions; including whether the information has practical utility;

b. The accuracy of the Federal Reserve's estimate of the burden of the proposed information collection, including the validity of the methodology and assumptions used;

c. Ways to enhance the quality, utility, and clarity of the information to be collected;

d. Ways to minimize the burden of information collection on respondents, including through the use of automated collection techniques or other forms of information technology; and

e. Estimates of capital or start up costs and costs of operation, maintenance, and purchase of services to provide information.

Proposal To Approve Under OMB Delegated Authority the Implementation of the Following Report

Report title: Quarterly Savings and Loan Holding Company Report.

Agency form number: FR 2320.

OMB control number: 7100—to be assigned.

Frequency: Quarterly.

Reporters: Top and lower-tier savings and loan holding companies (SLHCs).

Estimated annual reporting hours: 400 hours.

Estimated average hours per response: 2.5 hours.

Number of respondents: 40.

General description of report: This information collection is mandatory pursuant to section 312 of the Dodd-Frank Act; and section 10 of the Home Owners' Loan Act (HOLA), as amended by section 369 of the Dodd-Frank Act authorizing the Federal Reserve to

collect information on the FR 2320. Public Law 111–203, § 312(b)(1) and 12 U.S.C. 1467a(b)(2), as amended by Public Law 111–201, § 369(8).

The Federal Reserve has determined that a few of the items that the Office of Thrift Supervision (OTS) had deemed confidential—specifically, the FR 2320 counterparts to items HC850, HC855, and HC860 on Schedule HC of the Thrift Financial Report (TFR; OMB No. 1557–0255)—may be protected from disclosure under exemption 4 of the Freedom of Information Act (FOIA), (5 U.S.C. 552(b)(4)).

With regard to the remaining items the OTS had deemed confidential on Schedule HC, the SLHC may request, in writing, confidential treatment of such information under one or more of the exemptions in FOIA, 5 U.S.C. 552(b). All such requests for confidential treatment would be reviewed on a case-by-case basis and in response to a specific request for disclosure.

Current actions: The Federal Reserve proposes to implement the Quarterly Savings and Loan Holding Company Report (FR 2320) from SLHCs exempt from initially filing Federal Reserve regulatory reports.[1] These data would be the same as data previously collected on Schedule HC of the TFR.[2] Title III of the Dodd-Frank Act transferred all former OTS authorities (including rulemaking) related to SLHCs to the Federal Reserve on July 21, 2011. Consequently, the Federal Reserve became responsible for the consolidated supervision of SLHCs beginning July 21, 2011. These data would assist the Federal Reserve in the evaluation of a diversified holding company and in determining whether an SLHC is in compliance with applicable laws and regulations. Data collected with the proposed FR 2320 would contribute to the analyses of the overall financial condition of exempt SLHCs to ensure safe and sound operations.

The proposed new FR 2320 would collect parent only and consolidated financial data and organizational structure data. The new report would be effective as of the March 31, 2012, report date. The proposed FR 2320 report would generally be filed by the top-tier SLHCs. However, in situations where the top-tier SLHC is not the direct owner of the thrift or does not control the thrift, a lower tier SLHC may be required to file instead of the top-tier SLHC. In addition, lower tier SLHCs may voluntarily file Schedule HC or may be required to file in addition to the top-tier for safety and soundness purposes.

The proposed new report would be submitted quarterly as of the end of March, June, September, and December. If a SLHC has a quarter-end other than a calendar quarter-end, data from the fiscal quarter ending within the calendar quarter may be used to complete the FR 2320.[3] The filing deadline would be 45 calendar days after the March 31, June 30, September 30, and December 31 as-of date.

Respondents would be required to submit all items of the proposed FR 2320 report, both financial and non-financial, electronically using the Federal Reserve's Internet Electronic Submission (IESUB) application. The IESUB application would validate the report data for mathematical and logical consistency, calculate derived items, and provide the reporting institution with a confirmation receipt of its submission. Any respondent interested in learning more about the IESUB application would be directed to the Federal Reserve Bank Services—Reporting Central Web site and their Federal Reserve Bank contact (*http://www.frbservices.org/centralbank/reportingcentral/index.html*).

Proposal to approve under OMB delegated authority the extension for three years, without revision, of the following report:

Report title: Bank Holding Company Report of Insured Depository Institutions' Section 23A Transactions with Affiliates.

Agency form number: FR Y–8.

OMB control number: 7100–0126.

Frequency: Quarterly.

Reporters: Top-tier bank holding companies (BHCs), including financial holding companies (FHCs), for all insured depository institutions that are owned by the BHC and by foreign banking organizations (FBOs) that directly own a U.S. subsidiary bank.

Estimated annual reporting hours: Institutions with covered transactions, 31,294 hours; Institutions without covered transactions, 18,204 hours.

Estimated average hours per response: Institutions with covered transactions, 7.8 hours; Institutions without covered transactions, 1 hour.

Number of respondents: Institutions with covered transactions, 1,003; Institutions without covered transactions, 4,551.

General description of report: This information collection is mandatory pursuant to section 5(c) of the Bank Holding Company Act (12 U.S.C. 1844(c)) and section 225.5(b) of Regulation Y (12 CFR 225.5(b)). The data are confidential pursuant to the Freedom of Information Act (5 U.S.C. 552(b)(4)). Section (b)(4) exempts information deemed competitively sensitive from disclosure.

Abstract: This reporting form collects information on transactions between an insured depository institution and its affiliates that are subject to section 23A of the Federal Reserve Act. The primary purpose of the data is to enhance the Federal Reserve's ability to monitor bank exposures to affiliates and to ensure banks' compliance with section 23A of the Federal Reserve Act. Section 23A of the Federal Reserve Act is one of the most important statutes on limiting exposures to individual institutions and protecting against the expansion of the federal safety net.

Board of Governors of the Federal Reserve System, November 4, 2011.

Robert deV. Frierson,

Deputy Secretary of the Board.

[FR Doc. 2011–29088 Filed 11–9–11; 8:45 am]

BILLING CODE 6210–01–P

[1] Under the current reporting proposal for SLHCs (76 FR 53129), an exempt SLHC meets one of the following criteria (1) formed under section 10(c)(9)(C) of the Home Owners' Loan Act (HOLA) whose saving association subsidiaries' consolidated assets make up less than 5 percent of the total consolidated assets of the SLHCs, or (2) its top-tier holding company is an insurance company that only prepares financial statements using statutory accounting principles. The definition of an exempt SLHC is subject to change, based on comments received from the public during the comment period.

[2] Early in 2011, the Office of the Comptroller of the Currency, the Federal Reserve, Federal Deposit Insurance Corporation, and the Office of Thrift Supervision issued notice of the elimination of the TFR after the December 31, 2011, report date.

[3] For example, if the SLHC's fiscal year end is October, its fiscal quarter-ends are January, April, July, and October. Therefore, the fiscal quarter ending January 31 would be reported for the March 31 calendar quarter for the FR 2320.

DEPARTMENT OF HEALTH AND HUMAN SERVICES

Determination Concerning a Petition To Add a Class of Employees to the Special Exposure Cohort

AGENCY: National Institute for Occupational Safety and Health (NIOSH), Department of Health and Human Services (HHS).

ACTION: Notice.

SUMMARY: HHS gives notice of a determination concerning a petition to add a class of employees from the Piqua Organic Moderated Reactor, Piqua, Ohio, to the Special Exposure Cohort (SEC) under the Energy Employees Occupational Illness Compensation Program Act of 2000 (EEOICPA), 42 U.S.C. 7384q. On October 26, 2011, the Secretary of HHS determined that the following class of employees does not meet the statutory criteria for addition

to the SEC as authorized under EEOICPA:

All employees of the Department of Energy, its predecessor agencies, and their contractors and subcontractors who worked in any location at the Piqua Organic Moderated Reactor during the operational period from January 1, 1963 through May 1, 1966.

FOR FURTHER INFORMATION CONTACT: Stuart L. Hinnefeld, Director, Division of Compensation Analysis and Support, National Institute for Occupational Safety and Health (NIOSH), 4676 Columbia Parkway, MS C–46, Cincinnati, OH 45226, *Telephone* 1–(877) 222–7570. Information requests can also be submitted by email to *DCAS@CDC.GOV*.

John Howard,

Director, National Institute for Occupational Safety and Health.

[FR Doc. 2011–29169 Filed 11–9–11; 8:45 am]

BILLING CODE 4163–19–P

DEPARTMENT OF HEALTH AND HUMAN SERVICES

Determination Concerning a Petition To Add a Class of Employees to the Special Exposure Cohort

AGENCY: National Institute for Occupational Safety and Health (NIOSH), Department of Health and Human Services (HHS).

ACTION: Notice.

SUMMARY: HHS gives notice of a determination concerning a petition to add a class of employees from the Norton Co. (or a subsequent owner), Worcester, Massachusetts, to the Special Exposure Cohort (SEC) under the Energy Employees Occupational Illness Compensation Program Act of 2000 (EEOICPA), 42 U.S.C. 7384q. On October 26, 2011, the Secretary of HHS determined that the following class of employees does not meet the statutory criteria for addition to the SEC as authorized under EEOICPA:

All Atomic Weapons Employees who worked in any building or area at the facility owned by Norton Co. (or a subsequent owner) in Worcester, Massachusetts, from October 11, 1962, through October 31, 2009.

FOR FURTHER INFORMATION CONTACT: Stuart L. Hinnefeld, Director, Division of Compensation Analysis and Support, National Institute for Occupational Safety and Health (NIOSH), 4676 Columbia Parkway, MS C–46, Cincinnati, OH 45226, *Telephone* 1–(877) 222–7570. Information requests can also be submitted by email to *DCAS@CDC.GOV*.

John Howard,

Director, National Institute for Occupational Safety and Health.

[FR Doc. 2011–29173 Filed 11–9–11; 8:45 am]

BILLING CODE 4163–19–P

DEPARTMENT OF HEALTH AND HUMAN SERVICES

Centers for Medicare & Medicaid Services

[Document Identifier: CMS–10415]

Agency Information Collection Activities: Proposed Collection; Comment Request

AGENCY: Centers for Medicare & Medicaid Services, HHS.

In compliance with the requirement of section 3506(c)(2)(A) of the Paperwork Reduction Act of 1995, the Centers for Medicare & Medicaid Services (CMS) is publishing the following summary of proposed collections for public comment. Interested persons are invited to send comments regarding this burden estimate or any other aspect of this collection of information, including any of the following subjects: (1) The necessity and utility of the proposed information collection for the proper performance of the agency's functions; (2) the accuracy of the estimated burden; (3) ways to enhance the quality, utility, and clarity of the information to be collected; and (4) the use of automated collection techniques or other forms of information technology to minimize the information collection burden.

1. *Type of Information Collection Request:* New collection; *Title of Information Collection:* State Exchange Certification Application *Use:* All States (including the 50 States, consortia of States, and the District of Columbia herein referred to as States) have the opportunity under Section 1311(b) of the Affordable Care Act to establish an Exchange no later than January 1, 2014.

Given the innovative nature of Exchanges and the statutorily-prescribed relationship between the Secretary and States in their development and operation, it is critical that the Secretary work closely with States to provide necessary guidance and technical assistance to ensure that States can meet the prescribed timelines, federal requirements, and goals of the statute.

States seeking to establish an Exchange must build an Exchange that meets the requirements set out in Section 1311(d) of the Affordable Care Act. In order to ensure that a State seeking certification as a State Exchange meets all applicable requirements the Secretary will require a State to submit an application for approval during the Fall of 2012 and to demonstrate operational readiness through virtual and on-site readiness review. Submission of this application may be through various means including online or by paper. This application may be adjusted to reflect final rules. *Form Number:* CMS–10415 (OCN: 0938–New) *Frequency:* Once; *Affected Public:* State, Local, or Tribal governments; *Number of Respondents:* 56; *Number of Responses:* 56; *Total Annual Hours:* 11,816. (For policy questions regarding this collection, contact Sarah Summer (301) 492–4443. For all other issues call (410) 786–1326.)

To obtain copies of the supporting statement and any related forms for the proposed paperwork collections referenced above, access CMS' Web site at *http://www.cms.gov/PaperworkReductionActof1995/PRAL/list.asp#TopOfPage* or email your request, including your address, phone number, OMB number, and CMS document identifier, to *Paperwork@cms.hhs.gov*, or call the Reports Clearance Office at 410–786–1326.

In commenting on the proposed information collections please reference the document identifier or OMB control number. To be assured consideration, comments and recommendations must be submitted in one of the following ways by *January 9, 2012:*

1. *Electronically.* You may submit your comments electronically to *http://www.regulations.gov.* Follow the instructions for ''Comment or Submission'' or ''More Search Options'' to find the information collection document(s) accepting comments.

2. *By regular mail.* You may mail written comments to the following address: CMS, Office of Strategic Operations and Regulatory Affairs, Division of Regulations Development, Attention: Document Identifier/OMB Control Number, Room C4–26–05, 7500 Security Boulevard, Baltimore, Maryland 21244–1850.

Dated: November 7, 2011.

Martique Jones,

Director, Regulations Development Group, Division B, Office of Strategic Operations and Regulatory Affairs.

[FR Doc. 2011–29144 Filed 11–9–11; 8:45 am]

BILLING CODE 4120–01–P

DEPARTMENT OF HEALTH AND HUMAN SERVICES

Administration for Children and Families

Office of Refugee Resettlement; Statement of Organization, Functions, and Delegations of Authority

AGENCY: Administration for Children and Families, HHS.

ACTION: Notice.

SUMMARY: Statement of Organizations, Functions, and Delegations of Authority. The Administration for Children and Families has reorganized the Office of Refugee Resettlement. This reorganization includes the organization and its substructure components as listed in this document. This reorganization establishes the Division of Refugee Health. It renames the Division of Community Resettlement to the Division of Refugee Services. It renames the Division of Unaccompanied Children's Services to the Division of Children's Services. It deletes the Division of Budget, Policy, and Data Analysis and moves the function to the Office of the Director. The notice also serves to establish an Associate Deputy Director position.

FOR FURTHER INFORMATION CONTACT: Eskinder Negash, Director, Office of Refugee Resettlement, Administration for Children and Families, 901 D Street SW., Washington, DC 20447, (202) 401–9246.

This notice amends Part K of the Statement of Mission, Organization, Functions, and Delegations of Authority of the Department of Health and Human Services (HHS), Administration for Children and Families (ACF) as follows: Chapter KR, the Office of Refugee Resettlement (ORR) (73 FR 5199), as last amended January 29, 2008.

Under Chapter KR, Office of Refugee Resettlement, delete KR in its entirety and replace with the following:

KR.00 Mission. The Office of Refugee Resettlement (ORR) advises the Secretary, through the Assistant Secretary for Children and Families, on matters relating to refugee resettlement, immigration, victims of severe forms of trafficking in persons, victims of torture, unaccompanied alien children and the repatriation of U.S. citizens. The Office plans, develops and directs implementation of a comprehensive program for domestic refugee and entrant resettlement assistance to include cash assistance, medical assistance and associated social services in support of early self-sufficiency. It develops, recommends, and issues program policies, procedures and interpretations to provide program direction. The Office monitors and evaluates the performances of States and other public and private agencies in administering these programs and supports actions to improve them. It provides leadership and direction in the development and coordination of national public and private programs that provide assistance to refugees, asylees, Cuban and Haitian entrants, and certain Amerasians and victims of severe forms of trafficking in persons. The Office is also responsible for the care and custody of unaccompanied alien children, the issuance of eligibility letters for victims of severe forms of trafficking in persons, the provision of specific consent in Special Immigrant Juvenile status cases, and the policies, procedures and interpretations needed in these program areas.

KR.10 Organization. The Office of Refugee Resettlement (ORR) is headed by a Director who reports directly to the Assistant Secretary for Children and Families.

The Office is organized as follows:

Office of the Director (KRA);
Division of Refugee Assistance (KRE);
Division of Refugee Services (KRF);
Division of Children's Services (KRH);
Division of Anti-Trafficking in Persons (KRI);
Division of Refugee Health (KRJ).

KR.20 Functions. A. The Office of the Director is directly responsible to the Assistant Secretary for Children and Families for carrying out ORR's mission and providing guidance and general supervision to the components of ORR. The Office provides direction in the development of general supervision to the components of ORR. The Office provides direction in the development of program policy and budget and in the formulation of salaries and expense budgets. Staff also provide administrative and personnel support services.

The Office coordinates with the lead refugee and entrant program offices of other Federal departments; provides leadership in representing refugee and entrant programs, policies and administration to a variety of governmental entities and other public and private interests; and acts as the coordinator of the total refugee and entrant resettlement effort for ACF and the Department. The Office oversees the care and custody of unaccompanied alien children, grants specific consent for those who wish to invoke the jurisdiction of a state court for a dependency order to seek Special Immigrant Juvenile (SIJ) status and makes determinations of eligibility for the Unaccompanied Refugee Minors (URM) Program.

The Office prepares annual budget estimates and related materials; and develops regulations, legislative proposals, and routine interpretations of policy as they relate to each of the program areas. The Office performs allocation and tracking of funds for all programs. The Office collects data and performs analysis on the changing needs of the refugee and entrant population; provides leadership to identify data needs and sources, and formulates data and reporting requirements.

Within the Office, the Deputy Director assumes the Director's responsibilities in the absence of the Director and provides oversight to the Division of Refugee Health, Division of Refugee Services and the Division of Refugee Assistance.

The Associate Deputy Director provides oversight to the Division of Children's Services and the Division of Anti-Trafficking in Persons.

B. Division of Refugee Assistance represents ORR in coordinating services and capacity for refugees in a manner that helps refugees to become employed and economically self-sufficient as soon after their arrival in the United States. The Division monitors and provides technical assistances to the State-administered domestic assistance programs and Wilson/Fish projects. The Division works closely with each state in designing a resettlement program specific to the needs of incoming populations. The Division develops guidance and procedures for their implementation; manages special initiatives to increase refugee self-sufficiency such as through state funded discretionary grants or pilot programs. The Division also assists public and private agencies on data reporting and the resolution of reporting problems. The Division develops and supports the flow of information on refugee profiles and community resources in support of effective placement at the State and local level. The Division works closely with the Department of State to ensure effective and seamless orientation from overseas to local resettlement community. The Division manages the effective allocation of formula social services and targeted assistance in support of newly arriving populations. The Division tracks all state costs related to refugee assistance.

C. Division of Refugee Services directs and manages effective refugee resettlement through the programmatic implementation of grants, contracts and special initiatives, such as the Match Grant Program. The Division oversees

and monitors most ORR discretionary grants; recommends grantee allocation; coordinates with the grants management office to review the financial expenditures under discretionary grant programs; provides data in support of apportionment requests; and provides technical assistance on discretionary grants operations. The Division coordinates and provides liaison with the Department and other Federal agencies on discretionary grant operational issues and other activities as specified by the Director or required by Congressional mandate. The Division responds to unanticipated refugee and entrant arrivals or significant increases in arrivals to communities where adequate or appropriate services do not exist through supplemental initiatives. The Division works to promote economic independence among refugees through social services, educational services, and intensive case management and community development initiatives.

D. Division of Children's Services supports services to unaccompanied children, who are referred to ORR for care as refugees, asylees, Cuban and Haitian entrants, children granted Special Immigrant Juvenile Visas and those pending immigration status or identified as victims of trafficking. The Division implements intake and placement decisions for all unaccompanied refugee and alien children. The Division supports specialized care through grants, contracts and state administered unaccompanied minors programs. The Division conducts monitoring and inspections of facilities and placement locations in which unaccompanied children reside. The Division also maintains statistical information and data on each child and any actions concerning the child while the child is under the Director's care.

The Division ensures consideration of the child's best interest in care and custody decisions. The Division coordinates all decisions related to sponsor reunification, background checks, home assessments, follow-up services, medical assessment and treatment, sponsorship breakdowns, repatriation and movement of children into the Unaccompanied Refugee Minors (URM) Program.

The Division develops policy to ensure all children's programs are administered in a manner that ensures the best interest of the child and that services are administered in a manner that supports child welfare standards of care and services to include; training, accreditation, legal services, assessment and trauma related initiatives. The Division administers the pro bono legal services and child advocate program and compiles a state-by-state list of professionals or entities qualified to provide the children with a guardian and attorney representational services.

E. Division of Anti-Trafficking in Persons is responsible for implementing certain provisions of the Trafficking Victims Protection Act. The Division coordinates the certification of, and services to, victims of severe forms of trafficking, promotes public awareness on human trafficking, and increases identification of potential victims of severe forms of trafficking. The Division manages these activities through grants and contracts. It also coordinates with other Federal Government agencies on certification activities and policy issues related to the trafficking laws. The Division certifies victims of severe forms of trafficking following consultation with appropriate Federal and State Government agencies and social service agencies. The Division coordinates with the appropriate entities for the determination and placement of identified and certified unaccompanied minor victims of trafficking. It maintains statistical information and data on each victim, including certification documentation and services provided. The Division compiles an annual report, in coordination with other Federal agencies, on the number of certifications issued to and services accessed by identified victims.

F. Division of Refugee Health provides direction for assuring that refugees are provided medical assistance and mental health services through the State-administered program and alternative programs such as the Wilson/Fish projects. The Division ensures the quality of medical screening and initial medical treatment of refugees through its administration of grant programs, technical assistance and interagency agreements in support of comprehensive medical and mental health services. The Division supports coordination of services to refugees under the Affordable Care Act. The Division also supports mental health services to victims of torture.

The Division works closely with State Refugee Health Coordinators in the planning and provision of medical and mental health services to meet the individual needs of incoming populations. The Division tracks all state costs related to refugee medical assistance and screening.

Dated: November 1, 2011.

George H. Sheldon,

Acting Assistant Secretary for Children and Families.

[FR Doc. 2011–29075 Filed 11–9–11; 8:45 am]

BILLING CODE 4120–27–P

DEPARTMENT OF HEALTH AND HUMAN SERVICES

Food and Drug Administration

[Docket No. FDA–2011–D–0787]

Draft Guidance for Industry and Food and Drug Administration Staff; Investigational Device Exemptions for Early Feasibility Medical Device Clinical Studies, Including Certain First in Human Studies; Availability

AGENCY: Food and Drug Administration, HHS.

ACTION: Notice.

SUMMARY: The Food and Drug Administration (FDA) is announcing the availability of a draft guidance entitled ''Investigational Device Exemptions (IDE) for Early Feasibility Medical Device Clinical Studies, Including Certain First in Human (FIH) Studies.'' Through the approaches announced in this draft guidance, FDA intends to facilitate early feasibility studies of medical devices, using appropriate risk mitigation strategies, under the IDE requirements. Early feasibility studies allow for limited early clinical evaluations of devices to provide proof of principle and initial clinical safety data before the device design is finalized. This draft guidance addresses the information that should be provided to FDA in support of an early feasibility study IDE application and explains the requirements applicable to modifications to the device design or clinical protocol during the early feasibility study. This draft guidance is not final nor is it in effect at this time.

DATES: Although you can comment on any guidance at any time (see 21 CFR 10.115(g)(5)), to ensure that the Agency considers your comment on this draft guidance before it begins work on the final version of the guidance, submit either electronic or written comments on the draft guidance by February 8, 2012.

ADDRESSES: Submit written requests for single copies of the draft guidance document entitled ''Investigational Device Exemptions (IDE) for Early Feasibility Medical Device Clinical Studies, Including Certain First in Human (FIH) Studies'' to the Division of Small Manufacturers, International, and

Consumer Assistance, Center for Devices and Radiological Health, Food and Drug Administration, 10903 New Hampshire Ave., Bldg. 66, rm. 4613, Silver Spring, MD 20993–0002. Send one self-addressed adhesive label to assist that office in processing your request, or fax your request to (301) 847–8149. See the **SUPPLEMENTARY INFORMATION** section for information on electronic access to the guidance.

Submit electronic comments on the draft guidance to *http://www.regulations.gov*. Submit written comments to the Division of Dockets Management (HFA–305), Food and Drug Administration, 5630 Fishers Lane, rm. 1061, Rockville, MD 20852. Identify comments with the docket number found in brackets in the heading of this document.

FOR FURTHER INFORMATION CONTACT: Dorothy Abel, Center for Devices and Radiological Health, Food and Drug Administration, 10903 New Hampshire Ave., Bldg. 66, rm. 1204, Silver Spring, MD 20993–0002, (301) 796–6366.

SUPPLEMENTARY INFORMATION:

I. Background

This draft guidance is intended to provide assistance to FDA staff, clinicians, clinical innovators, and industry on the development and review of IDE applications (21 CFR 812.20) for early feasibility studies of significant risk devices. Early feasibility studies allow for early clinical evaluation of devices to provide proof of principle and initial clinical safety data in a limited number of subjects. During these studies, iterative device modifications are likely to be made based on clinical experience. Early feasibility studies may be appropriate early in device development when nonclinical testing methods are not available or adequate to provide the information needed to advance the developmental process, and clinical experience is thus necessary. As with all clinical studies, initiation of an early feasibility study must be justified by an appropriate risk-benefit analysis and adequate human subject protection measures.

This draft guidance discusses the key principles unique to the justification for, and design of, early feasibility studies, as well as outlines the general principles for preparing and reviewing early feasibility study IDE applications. This draft guidance is not intended to address all required elements of an IDE application generally or to provide a comprehensive tutorial on best clinical practices for investigational medical device studies.

II. Significance of Guidance

This draft guidance is being issued consistent with FDA's good guidance practices regulation (21 CFR 10.115). The draft guidance, when finalized, will represent the Agency's current thinking on IDE for early feasibility studies. It does not create or confer any rights for or on any person and does not operate to bind FDA or the public. An alternative approach may be used if such approach satisfies the requirements of the applicable statute and regulations.

Elsewhere in this issue of the **Federal Register**, FDA is announcing the solicitation of nominations from sponsors of innovative device technologies to participate in a pilot program for early feasibility study IDE applications, which implements the approaches announced in this draft guidance. The experience gained from the pilot program will be used to inform the final version this draft guidance.

III. Electronic Access

Persons interested in obtaining a copy of the draft guidance may do so by using the Internet. A search capability for all CDRH guidance documents is available at *http://www.fda.gov/MedicalDevices/DeviceRegulationandGuidance/GuidanceDocuments/default.htm*. Guidance documents are also available at *http://www.regulations.gov*.

You may either send an email request to *dsmica@fda.hhs.gov* to receive an electronic copy of this draft guidance or send a fax request to (301) 847–8149 to receive a hard copy. Please use the document number 1782 to identify the guidance you are requesting.

IV. Paperwork Reduction Act of 1995

This draft guidance refers to previously approved collections of information found in FDA regulations. These collections of information are subject to review by the Office of Management and Budget (OMB) under the Paperwork Reduction Act of 1995 (44 U.S.C. 3501–3520). The collections of information in 21 CFR part 812 have been approved under OMB control number 0910–0078.

V. Comments

Interested persons may submit to the Division of Dockets Management (see **ADDRESSES**), either electronic or written comments regarding this document. It is only necessary to send one set of comments. It is no longer necessary to send two copies of mailed comments. Identify comments with the docket number found in brackets in the heading of this document. Received comments may be seen in the Division of Dockets Management between 9 a.m. and 4 p.m., Monday through Friday.

Dated: November 4, 2011.

Leslie Kux,

Acting Assistant Commissioner for Policy.

[FR Doc. 2011–29117 Filed 11–9–11; 8:45 am]

BILLING CODE 4160–01–P

DEPARTMENT OF HEALTH AND HUMAN SERVICES

Food and Drug Administration

[Docket No. FDA–2011–D–0790]

Draft Guidance for Industry, Clinical Investigators, Institutional Review Boards, and Food and Drug Administration Staff; Food and Drug Administration Decisions for Investigational Device Exemption Clinical Investigations; Availability

AGENCY: Food and Drug Administration, HHS.

ACTION: Notice.

SUMMARY: The Food and Drug Administration (FDA) is announcing the availability of the draft guidance entitled ''FDA Decisions for Investigational Device Exemption (IDE) Clinical Investigations.'' This guidance document has been developed to promote the initiation of clinical investigations to evaluate medical devices under FDA's IDE regulations. In an effort to promote timely clinical investigations in a manner that protects study subjects, FDA has developed methods to allow a clinical investigation to begin under certain circumstances, even when there are outstanding issues regarding the IDE submission. These mechanisms, including approval with conditions, staged approval or staged approval with conditions, and communication of outstanding issues related to the IDE through future considerations, are described in this guidance.

DATES: Although you can comment on any guidance at any time (see 21 CFR 10.115(g)(5)), to ensure that the Agency considers your comment on this draft guidance before it begins work on the final version of the guidance, submit either electronic or written comments on the draft guidance by February 8, 2012.

ADDRESSES: Submit written requests for single copies of the draft guidance document entitled ''FDA Decisions for Investigational Device Exemption (IDE) Clinical Investigations'' to the Division of Small Manufacturers, International and Consumer Assistance, Center for Devices and Radiological Health, Food

and Drug Administration, 10903 New Hampshire Ave., Bldg. 66, rm. 4613, Silver Spring, MD 20993–0002; or to the Office of Communication, Outreach and Development (HFM–40), Center for Biologics Evaluation and Research (CBER), Food and Drug Administration, 1401 Rockville Pike, Rockville, MD 20852–1448. Send one self-addressed adhesive label to assist that office in processing your request, or fax your request to (301) 847–8149. See the **SUPPLEMENTARY INFORMATION** section for information on electronic access to the guidance.

Submit electronic comments on the draft guidance to *http://www.regulations.gov.* Submit written comments to the Division of Dockets Management (HFA–305), Food and Drug Administration, 5630 Fishers Lane, rm. 1061, Rockville, MD 20852. Identify comments with the docket number found in brackets in the heading of this document.

FOR FURTHER INFORMATION CONTACT:

Owen Faris, Center for Devices and Radiological Health, Food and Drug Administration, 10903 New Hampshire Ave., Bldg. 66, rm. 1108, Silver Spring, MD 20993–0002, (301) 796–6356; or

Stephen Ripley, Center for Biologics Evaluation and Research (HFM–17), Food and Drug Administration, 1401 Rockville Pike, suite 200N, Rockville, MD 20852, (301) 827–6210.

I. Background

FDA approval of an IDE submission allows the initiation of a clinical investigation of a significant risk device. This guidance is intended to provide clarification regarding the regulatory implications of the decisions that FDA may render based on review of an IDE and to provide a general explanation of the reasoning and implications of those decisions. FDA has traditionally referred to IDE approvals that have conditions as ''Conditional Approvals.'' FDA believes that the term ''Approval with Conditions'' is more appropriate because the term conveys that the IDE has been approved and may begin without awaiting further FDA review. An IDE may be approved with conditions if FDA has determined, despite outstanding issues, that the information provided is sufficient to justify human clinical evaluation of the device, and that the proposed study design is generally acceptable. FDA may now also include ''future considerations'' in an approval or approval with conditions letter, which are issues and recommendations that FDA believes the sponsor should consider in preparation for a marketing application or a future clinical investigation. Future considerations are intended to provide helpful advice to sponsors regarding important elements of the future application that the IDE may not specifically address.

In this guidance new mechanisms are introduced, termed ''stage approval'' and ''staged approval with conditions,'' by which FDA may grant IDE approval or approval with conditions, while certain outstanding questions are being answered in parallel with enrollment in the clinical investigation. Staged approval and staged approval with conditions permit the clinical investigation to begin in a timely manner while maintaining appropriate subject protections. Staged approval or staged approval with conditions is most common for pivotal studies in which many subjects will be enrolled over an extended period of time, but may be applicable to other clinical investigations as well.

As a result of this draft guidance, FDA, where appropriate, seeks to offer flexibility in how outstanding issues can be addressed to allow clinical investigations to commence without unnecessary delay, while ensuring that human subjects are adequately protected.

II. Significance of Guidance

This draft guidance is being issued consistent with FDA's good guidance practices regulation (21 CFR 10.115). The draft guidance, when finalized, will represent the Agency's current thinking on ''FDA Decisions for Investigational Device Exemption (IDE) Clinical Investigations.'' It does not create or confer any rights for or on any person and does not operate to bind FDA or the public. An alternative approach may be used if such approach satisfies the requirements of the applicable statute and regulations.

III. Electronic Access

Persons interested in obtaining a copy of the draft guidance may do so by using the Internet. A search capability for all CDRH guidance documents is available at *http://www.fda.gov/MedicalDevices/DeviceRegulationandGuidance/GuidanceDocuments/default.htm.* Guidance documents are also available at *http://www.regulations.gov* or from the CBER Internet site at *http://www.fda.gov/BiologicsBloodVaccines/GuidanceComplianceRegulatoryInformation/default.htm.* To receive ''FDA Decisions for Investigational Device Exemption (IDE) Clinical Investigations'' you may either send an email request to *dsmica@fda.hhs.gov* to receive an electronic copy of the document or send a fax request to (301) 847–8149 to receive a hard copy. Please use the document number 1783 to identify the guidance you are requesting.

IV. Paperwork Reduction Act of 1995

This draft guidance refers to previously approved collections of information found in FDA regulations. These collections of information are subject to review by the Office of Management and Budget (OMB) under the Paperwork Reduction Act of 1995 (44 U.S.C. 3501–3520). The collections of information in 21 CFR part 812 have been approved under OMB control number 0910–0078.

V. Comments

Interested persons may submit to the Division of Dockets Management (see **ADDRESSES**), either electronic or written comments regarding this document. It is only necessary to send one set of comments. It is no longer necessary to send two copies of mailed comments. Identify comments with the docket number found in brackets in the heading of this document. Received comments may be seen in the Division of Dockets Management between 9 a.m. and 4 p.m., Monday through Friday.

Dated: November 4, 2011.

Leslie Kux,

Acting Assistant Commissioner for Policy.

[FR Doc. 2011–29118 Filed 11–9–11; 8:45 am]

BILLING CODE 4160–01–P

DEPARTMENT OF HEALTH AND HUMAN SERVICES

Food and Drug Administration

[Docket No. FDA–2011–N–0788]

Pilot Program for Early Feasibility Study Investigational Device Exemption Applications

AGENCY: Food and Drug Administration, HHS.

ACTION: Notice.

SUMMARY: The Food and Drug Administration (FDA) is soliciting nominations from sponsors of innovative device technologies to participate in a pilot program for early feasibility study investigational device exemption (IDE) applications. The pilot program will conform to the approaches outlined in the draft guidance entitled ''Investigational Device Exemptions (IDE) for Early Feasibility Medical Device Clinical Studies, Including Certain First in Human (FIH) Studies.'' Under the pilot program, FDA's review

of IDE applications for an early feasibility study, including a first in human study, is expected to be based on less nonclinical data than would be expected for a traditional feasibility or a pivotal study. The pilot will also involve new approaches to IDE review to facilitate timely device and clinical protocol modifications during an early feasibility study.

DATES: FDA will begin accepting nominations for participation in the voluntary pilot program on December 12, 2011.

FOR FURTHER INFORMATION CONTACT: Sheila Brown, Center for Devices and Radiological Health, Food and Drug Administration, 10903 New Hampshire Ave. Bldg. 66, rm. 1676, Sliver Spring, MD 20993–0002, (301) 796–5640.

SUPPLEMENTARY INFORMATION:

I. Background

Early feasibility studies allow for early clinical evaluation of significant risk devices to provide proof of principle and initial clinical safety data. During these studies, iterative device modifications are likely to be made based on clinical experience. Early feasibility studies may be appropriate early in the device development process in a limited number of subjects when nonclinical testing methods are not available or adequate to provide the information needed to advance the development process, making clinical experience necessary. As with all clinical studies, the initiation of an early feasibility study must be justified by an appropriate risk-benefit analysis and adequate human subject protection measures. Because these studies are performed early in the device development process before the device design is finalized and are only appropriate where additional nonclinical testing is not available or adequate to provide the information needed to advance device development, the information included in the IDE application may vary from the information typically included in IDE applications for traditional feasibility or pivotal studies. To address the unique challenge of early feasibility studies, elsewhere in this issue of the **Federal Register**, FDA is announcing the availability of the early feasibility study draft guidance.

The anticipated benefits of this pilot program include facilitating development of innovative products in the United States and evaluating the new approaches for modifications made during early feasibility studies, which are outlined in the early feasibility study draft guidance. The information learned and experiences gained from the pilot program will help inform the final guidance document.

II. Early Feasibility Study IDE Pilot Program

FDA has developed a pilot program that presents a streamlined process to interested sponsors/requesters. This notice outlines: (1) The guiding principles underlying the pilot program, (2) appropriate candidates for the pilot program, and (3) the procedures FDA intends to follow in the pilot program for early feasibility IDEs.

A. Guiding Principles

The following basic principles underline the early feasibility study IDE pilot program described in this notice. FDA intends that these principles create a common understanding between the sponsor and FDA about the goals and parameters of the early feasibility study IDE application pilot program:

1. FDA will not publicly disclose participation of a sponsor in the early feasibility IDE pilot program, unless the sponsor consents or has already made this information public, or disclosure is required by law.

2. Participating in this pilot program does not guarantee approval of an IDE application, nor is a sponsor precluded from withdrawing from the pilot program and pursuing traditional IDE review.

3. Due to FDA resource issues, FDA intends to limit the pilot program to nine candidates.

B. Appropriate Candidates

Appropriate candidates for the pilot program are medical devices for which:

1. The sponsor has not already submitted an IDE application.

2. An application for premarket review or approval would require the submission of clinical data.

3. Limited clinical study of the device (*e.g.,* generally fewer than 10 initial subjects) is necessary because additional nonclinical testing is unlikely to provide the insights necessary to further the development of the device, or appropriate nonclinical tests are unavailable.

FDA encourages any interested sponsors who believe their device and/or study are appropriate candidates to contact FDA through the Center for Devices and Radiological Health (CDRH), Investigational Device Exemption Section at (301) 796–5640, before initiating the procedures referenced in this document in section *C. Procedures.*

C. Procedures

FDA has developed the following procedures to ensure adequate information to assess a candidate's suitability for the pilot program is provided to FDA without creating a burdensome new application process:

1. Nomination

The sponsor/requester of an innovative therapeutic or diagnostic device may nominate their study for participation in the pilot program by submitting a nomination to the CDRH Document Mail Center (Food and Drug Administration, Center for Devices and Radiological Health, Document Mail Center, Bldg. 66, rm. G609, 10903 New Hampshire Ave., Silver Spring, MD 20993–0002), with a duplicate copy sent to the Investigational Device Exemption Section (see **FOR FURTHER INFORMATION CONTACT**). FDA intends to acknowledge receipt of nominations via email. The following information will assist FDA in processing and responding to nominations:

- Name of the sponsor/requester and relevant contact information,
- Name of the product,
- Succinct description of the technology and disease or condition the device is intended to diagnose or treat, and
- A brief statement explaining why the device is an appropriate candidate for the pilot program as described in this document in section *B. Appropriate Candidates.*

2. FDA Consideration

FDA intends to consider each nomination within 30 days of receiving the complete information described in this document in section *C. Procedures.* FDA may contact the sponsor/requester to request supplemental information during the 30-day review period.

3. Sponsor/Requester Notification

FDA intends to notify the sponsor/requester whether or not the product is an appropriate candidate for the early feasibility study IDE pilot program within 30 days from receiving the complete information described in this document in section *C. Procedures.*

4. Acceptance Meeting

If the nominee is deemed an appropriate candidate, FDA intends to meet with the product sponsor/requester, either in person or by telephone, within 30 days of notifying the sponsor/requester that its nominee was accepted.

5. FDA Review

Under the pilot program, early feasibility study IDE applications will be reviewed according to the approaches outlined in the early feasibility study draft guidance. The essential elements announced in the early feasibility study draft guidance are:

- FDA may approve an IDE application for an early feasibility study, including certain first in human studies, based on less nonclinical data than would be expected for a traditional feasibility or a pivotal study. This is because early feasibility studies are only appropriate where additional nonclinical testing is not available or adequate to provide the information needed to advance the developmental process. Identification of the data necessary to support an early feasibility study should be based on a thorough device evaluation strategy that describes the device and procedure-related attributes and addresses the potential failure modes. Appropriate human subject protection measures and risk mitigation strategies must also be identified. This policy is intended to facilitate initiation of clinical studies in the United States earlier in the device development process than has historically occurred, when appropriate.
- New approaches that facilitate timely device and clinical protocol modifications during an early feasibility study while still requiring compliance with the IDE regulations in 21 CFR part 812.

FDA has provided additional information regarding its expectations for early feasibility study IDE applications in the early feasibility study draft guidance.

D. Duration of the Pilot

FDA intends to accept requests for participation in the pilot program for 180 days from the date of publication of this notice. FDA may decide to terminate the pilot program before the close of the 180-day period or extend the pilot program beyond the 180-day period. The decision to terminate or extend the pilot will be announced in the **Federal Register**. FDA may also decide to modify the pilot program while it is in effect. Any modifications will also be announced in the **Federal Register**. FDA intends to terminate the pilot program when the early feasibility study draft guidance is finalized.

E. Evaluation

FDA intends to use the experience gained from the pilot program to inform the final version of the early feasibility study draft guidance.

Dated: November 4, 2011.

Leslie Kux,

Acting Assistant Commissioner for Policy.

[FR Doc. 2011–29116 Filed 11–9–11; 8:45 am]

BILLING CODE 4160–01–P

DEPARTMENT OF HEALTH AND HUMAN SERVICES

National Institutes of Health

National Heart, Lung, and Blood Institute; Notice of Closed Meetings

Pursuant to section 10(d) of the Federal Advisory Committee Act, as amended (5 U.S.C. App.), notice is hereby given of the following meetings.

The meetings will be closed to the public in accordance with the provisions set forth in sections 552b(c)(4) and 552b(c)(6), Title 5 U.S.C., as amended. The grant applications and the discussions could disclose confidential trade secrets or commercial property such as patentable material, and personal information concerning individuals associated with the grant applications, the disclosure of which would constitute a clearly unwarranted invasion of personal privacy.

Name of Committee: National Heart, Lung, and Blood Institute Special Emphasis Panel, Life after Linkage: The Future of Family Studies.

Date: December 1–2, 2011.

Time: 8:30 a.m. to 5:30 p.m.

Agenda: To review and evaluate grant applications.

Place: Hilton Garden Inn, 7301 Waverly Street, Bethesda, MD 20814.

Contact Person: YingYing Li-Smerin, MD, Ph.D., Scientific Review Officer, Office of Scientific Review/DERA, National Heart, Lung, and Blood Institute, 6701 Rockledge Drive, Room 7184, Bethesda, MD 20892–7924. (301) 435–0277. *lismerin@nhlbi.nih.gov.*

Name of Committee: National Heart, Lung, and Blood Institute Special Emphasis Panel, COPD Case Finding Methodology.

Date: December 1, 2011.

Time: 9 a.m. to 2 p.m.

Agenda: To review and evaluate grant applications.

Place: Marriott Wardman Park Washington DC Hotel, 2660 Woodley Road NW., Washington, DC 20008.

Contact Person: Stephanie J Webb, Ph.D., Scientific Review Officer, Review Branch/DERA, National Heart, Lung, and Blood Institute, 6701 Rockledge Drive, Room 7196, Bethesda, MD 20892. (301) 435–0291. *stephanie.webb@nih.gov.*

Name of Committee: National Heart, Lung, and Blood Institute Special Emphasis Panel, PPG Review: Endothelium and cardiovascular function.

Date: December 2, 2011.

Time: 8:30 a.m. to 4:30 p.m.

Agenda: To review and evaluate grant applications.

Place: Hyatt Regency Crystal City, 2799 Jefferson Davis Highway, Arlington, VA 22202.

Contact Person: Tony L Creazzo, Ph.D., Scientific Review Officer.

(Catalogue of Federal Domestic Assistance Program Nos. 93.233, National Center for Sleep Disorders Research; 93.837, Heart and Vascular Diseases Research; 93.838, Lung Diseases Research; 93.839, Blood Diseases and Resources Research, National Institutes of Health, HHS)

Dated: November 4, 2011.

Jennifer S. Spaeth,

Director, Office of Federal Advisory Committee Policy.

[FR Doc. 2011–29142 Filed 11–9–11; 8:45 am]

BILLING CODE 4140–01–P

DEPARTMENT OF HEALTH AND HUMAN SERVICES

National Institutes of Health

National Cancer Institute; Notice of Closed Meeting

Pursuant to section 10(d) of the Federal Advisory Committee Act, as amended (5 U.S.C. App.), notice is hereby given of the following meeting.

The meeting will be closed to the public in accordance with the provisions set forth in sections 552b(c)(4) and 552b(c)(6), Title 5 U.S.C., as amended. The grant applications and the discussions could disclose confidential trade secrets or commercial property such as patentable material, and personal information concerning individuals associated with the grant applications, the disclosure of which would constitute a clearly unwarranted invasion of personal privacy.

Name of Committee: National Cancer Institute Special Emphasis Panel, Small Grants Program for Cancer Epidemiology.

Date: November 17–18, 2011.

Time: 8:30 a.m. to 5 p.m.

Agenda: To review and evaluate grant applications.

Place: Bethesda North Marriott Hotel & Conference Center, 5701 Marinelli Road, Bethesda, MD 20852.

Contact Person: Jeffrey E. DeClue, Ph.D., Scientific Review Officer, Special Review and Logistics Branch, Division of Extramural Activities, National Cancer Institute, NIH, 6116 Executive Boulevard, Room 8059, Bethesda, MD 20892–8329, (301) 496–7904, *decluej@mail.nih.gov.*

This notice is being published less than 15 days prior to the meeting due to scheduling conflicts.

Information is also available on the Institute's/Center's home page: *http://deainfo.nci.nih.gov/advisory/sep/sep.htm,* where an agenda and any additional information for the meeting will be posted when available.

(Catalogue of Federal Domestic Assistance Program Nos. 93.392, Cancer Construction;

93.393, Cancer Cause and Prevention Research; 93.394, Cancer Detection and Diagnosis Research; 93.395, Cancer Treatment Research; 93.396, Cancer Biology Research; 93.397, Cancer Centers Support; 93.398, Cancer Research Manpower; 93.399, Cancer Control, National Institutes of Health, HHS)

Dated: November 4, 2011.

Jennifer S. Spaeth,

Director, Office of Federal Advisory Committee Policy.

[FR Doc. 2011–29141 Filed 11–9–11; 8:45 am]

BILLING CODE 4140–01–P

DEPARTMENT OF HEALTH AND HUMAN SERVICES

National Institutes of Health

National Institute of Allergy and Infectious Diseases; Notice of Closed Meeting

Pursuant to section 10(d) of the Federal Advisory Committee Act, as amended (5 U.S.C. App.), notice is hereby given of the following meeting.

The meeting will be closed to the public in accordance with the provisions set forth in sections 552b(c)(4) and 552b(c)(6), Title 5 U.S.C., as amended. The contract proposals and the discussions could disclose confidential trade secrets or commercial property such as patentable material, and personal information concerning individuals associated with the contract proposals, the disclosure of which would constitute a clearly unwarranted invasion of personal privacy.

Name of Committee: National Institute of Allergy and Infectious Diseases Special Emphasis Panel, NIAID Contract Review.

Date: December 5, 2011.

Time: 8 a.m. to 6 p.m.

Agenda: To review and evaluate contract proposals.

Place: Bethesda North Marriott Hotel & Conference Center, 5701 Marinelli Road, Bethesda, MD 20852.

Contact Person: Brenda Lange-Gustafson, Ph.D., Scientific Review Officer, NIAID/NIH/DHHS, Scientific Review Program, Room 3122, 6700–B Rockledge Drive, MSC–7616, Bethesda, MD 20892–7616, (301) 451–3684, *bgustafson@niaid.nih.gov.*

(Catalogue of Federal Domestic Assistance Program Nos. 93.855, Allergy, Immunology, and Transplantation Research; 93.856, Microbiology and Infectious Diseases Research, National Institutes of Health, HHS)

Dated: November 4, 2011.

Jennifer S. Spaeth,

Director, Office of Federal Advisory Committee Policy.

[FR Doc. 2011–29137 Filed 11–9–11; 8:45 am]

BILLING CODE 4140–01–P

DEPARTMENT OF HEALTH AND HUMAN SERVICES

National Institutes of Health

National Institute of General Medical Sciences; Amended Notice of Meeting

Notice is hereby given of a change in the meeting of the National Institute of General Medical Sciences Special Emphasis Panel, November 15, 2011, 12 p.m. to November 15, 2011, 5 p.m., National Institutes of Health, Natcher Building, 45 Center Drive, Room 3AN18A, Bethesda, MD 20892 which was published in the **Federal Register** on November 1, 2011, 76 FR 67467.

The meeting date and time have been changed to November 21, 2011, 2 p.m. to November 21, 2011, 5 p.m.

The meeting is closed to the public.

Dated: November 4, 2011.

Jennifer S. Spaeth,

Director, Office of Federal Advisory Committee Policy.

[FR Doc. 2011–29140 Filed 11–9–11; 8:45 am]

BILLING CODE 4140–01–P

DEPARTMENT OF HEALTH AND HUMAN SERVICES

National Institutes of Health

Office of the Director, National Institutes of Health; Notice of Meeting

Pursuant to section 10(a) of the Federal Advisory Committee Act, as amended (5 U.S.C. App.), notice is hereby given of a meeting of the Advisory Committee to the Director, National Institutes of Health.

The meeting will be open to the public, with attendance limited to space available. Individuals who plan to attend and need special assistance, such as sign language interpretation or other reasonable accommodations, should notify the Contact Person listed below in advance of the meeting.

Name of Committee: Advisory Committee to the Director, National Institutes of Health.

Date: December 8–9, 2011.

Time: December 8, 2011, 9 a.m. to 4 p.m.

Agenda: Report from NIH Director, various Working Group reports.

Place: National Institutes of Health, Building 31, 31 Center Drive, Bethesda, MD 20892.

Time: December 9, 2011, 8:30 a.m. to 12 p.m.

Agenda: Report from NCI Director, various Working Group reports.

Place: National Institutes of Health, Building 31, 31 Center Drive, Bethesda, MD 20892.

Contact Person: Gretchen Wood, Staff Assistant, National Institutes of Health, Office of the Director, One Center Drive, Building 1, Room 103, Bethesda, MD 20892. (301) 496–4272. *woodgs@od.nih.gov.*

Any interested person may file written comments with the committee by forwarding the statement to the Contact Person listed on this notice. The statement should include the name, address, telephone number and, when applicable, the business or professional affiliation of the interested person.

In the interest of security, NIH has instituted stringent procedures for entrance onto the NIH campus. All visitor vehicles, including taxicabs, hotel, and airport shuttles will be inspected before being allowed on campus. Visitors will be asked to show one form of identification (for example, a government-issued photo ID, driver's license, or passport) and to state the purpose of their visit.

Information is also available on the Institute's/Center's home page: *http://acd.od.nih.gov,* where an agenda and any additional information for the meeting will be posted when available.

(Catalogue of Federal Domestic Assistance Program Nos. 93.14, Intramural Research Training Award; 93.22, Clinical Research Loan Repayment Program for Individuals from Disadvantaged Backgrounds; 93.232, Loan Repayment Program for Research Generally; 93.39, Academic Research Enhancement Award; 93.936, NIH Acquired Immunodeficiency Syndrome Research Loan Repayment Program; 93.187, Undergraduate Scholarship Program for Individuals from Disadvantaged Backgrounds, National Institutes of Health, HHS)

Dated: November 4, 2011.

Jennifer S. Spaeth,

Director, Office of Federal Advisory Committee Policy.

[FR Doc. 2011–29138 Filed 11–9–11; 8:45 am]

BILLING CODE 4140–01–P

DEPARTMENT OF HOUSING AND URBAN DEVELOPMENT

[Docket No. FR–5477–N–45]

Federal Property Suitable as Facilities To Assist the Homeless

AGENCY: Office of the Assistant Secretary for Community Planning and Development, HUD.

ACTION: Notice.

SUMMARY: This Notice identifies unutilized, underutilized, excess, and surplus Federal property reviewed by HUD for suitability for possible use to assist the homeless.

FOR FURTHER INFORMATION CONTACT: Juanita Perry, Department of Housing and Urban Development, 451 Seventh Street SW., Room 7262, Washington, DC 20410; telephone (202) 708–1234; TTY number for the hearing- and speech-impaired (202) 708–2565, (these telephone numbers are not toll-free), or call the toll-free Title V information line at (800) 927–7588.

SUPPLEMENTARY INFORMATION: In accordance with the December 12, 1988 court order in *National Coalition for the Homeless* v. *Veterans Administration,* No. 88–2503–OG (D.D.C.), HUD publishes a Notice, on a weekly basis, identifying unutilized, underutilized, excess and surplus Federal buildings and real property that HUD has reviewed for suitability for use to assist the homeless. Today's Notice is for the purpose of announcing that no additional properties have been determined suitable or unsuitable this week.

Dated: November 3, 2011.

Mark R. Johnston,

Deputy Assistant Secretary for Special Needs.

[FR Doc. 2011–28941 Filed 11–9–11; 8:45 am]

BILLING CODE 4210–67–P

DEPARTMENT OF THE INTERIOR

Bureau of Ocean Energy Management

Draft Programmatic Environmental Impact Study (PEIS) for Proposed 5-Year Outer Continental Shelf (OCS) Oil and Gas Leasing Program for 2012–2017

AGENCY: Bureau of Ocean Energy Management, Interior.

ACTION: Notice of availability.

SUMMARY: Pursuant to the National Environmental Policy Act (NEPA), BOEM announces the availability of the OCS Oil and Gas Leasing Program 2012–2017 Draft PEIS prepared by BOEM to support the Proposed Outer Continental Shelf Oil and Gas Leasing Program for 2012–2017. BOEM concurrently requests comments and announces public hearings.

DATES: Submit comments on or before January 9, 2012. See public hearing dates in the **SUPPLEMENTARY INFORMATION** below.

FOR FURTHER INFORMATION CONTACT: Bureau of Ocean Energy Management, Headquarters, 381 Elden Street, Herndon, VA 20170; Attention: Mr. James F. Bennett, Chief of the Division of Environmental Assessment, telephone: (703) 787–1660.

SUPPLEMENTARY INFORMATION: This draft PEIS assesses the scheduling for proposed lease sales during the years 2012 to 2017 in six planning areas on the OCS. These areas are the Western, Central and Eastern Gulf of Mexico, Cook Inlet, the Beaufort Sea, and the Chukchi Sea. Federal regulations (40 CFR 1502.4(b)) recommend analyzing effects of broad programs within a single programmatic EIS.

EIS Availability: Persons interested in reviewing the OCS Oil and Gas Leasing Program for 2012–2017 Draft Programmatic Environmental Impact Statement, OCS EIS/EA BOEM 2011–001 can locate it on the Internet at *http://www.boem.gov/5-year/2012-2017* or you may contact Mr. James F. Bennett at the address listed above to request a copy, in hard copy or as a CD/ROM version. Please specify if you wish a CD or paper copy. If neither is specified, a CD containing the Draft PEIS will be forwarded.

Library Availability: The Draft PEIS will also be available for review at libraries in states near the proposed lease sales. These libraries are listed at the BOEM Web site at *http://www.boem.gov/5-Year/2012-2017/libraries* or a list of libraries can be provided by contacting the contact person listed above.

Written Comments: Comments may be submitted online at *http://www.boem.gov/5-year/2012-2017* or letters may be sent to Mr. James F. Bennett at the address listed above. Comments should be labeled ''Attn: 5-Year Program Draft PEIS.''

An individual commenter may ask that we withhold their name, home address, or both from the public record, and we will honor such a request to the extent allowable by law. If you submit comments and wish us to withhold such information, you must state so prominently at the beginning of your submission. We will not consider anonymous comments.

Public Hearings: Thirteen public hearings on the 2012–2017 OCS Oil and Gas Leasing Program Draft PEIS will be held December 5 through December 16, 2011. In the Gulf Region, the hearings will be held from 1:00 to 4 p.m. and from 6 p.m. to 9 p.m. on the following dates and at the following locations: December 6, 2011, Houston, TX at the Marriott Houston Intercontinental at George Bush Intercontinental, 18700 John F. Kennedy Boulevard, Houston, TX 77032; December 7, 2011, Mobile, AL at the Renaissance Mobile Riverview Plaza Hotel, 64 South Water Street, Mobile, AL 36602; and December 8, 2011, New Orleans, LA at the Doubletree New Orleans Airport Hotel, 2150 Veterans Memorial Boulevard, Kenner, LA 70062.

In Washington, DC, the hearing will be held from 1 p.m. to 5 p.m. on December 6, 2011, at the Main Department of the Interior Building at 1849 C Street NW., Washington, DC 20240.

In Alaska, public hearings will be held from 7 p.m. to 10 p.m. on the following dates and at the following locations: December 5, 2011, Wainwright at the R. James Community Center; December 6, 2011, Nuiqsut at the Community Center, on; December 7, 2011, Katovik at the Community Center; December 8, 2011, Fairbanks at the Westmark Hotel and Conference Center, 813 Noble Street, Fairbanks, AK 99701; December 9, 2011, Anchorage at the Wilda Marston Theatre, 3600 Denali Street, Anchorage, AK; December 12, 2011, Kotzebue at the NW Arctic Borough Assembly Chamber, 163 Lagoon Street, Kotzebue, AK 99752; December 13, 2011, Point Hope at the City Qalgi Center; December 14, 2011, Point Lay at the Community Center; and December 16, 2011, Barrow at the Inupiat Heritage Center.

After the public hearings and written comments on the Draft PEIS have been reviewed and analyzed, a Final PEIS will be prepared.

Dated: October 26, 2011.

Rodney Cluck,

Acting Chief Environmental Officer, Bureau of Ocean Energy Management.

[FR Doc. 2011–29152 Filed 11–9–11; 8:45 am]

BILLING CODE 4310–MR–P

DEPARTMENT OF THE INTERIOR

Bureau of Ocean Energy Management

Proposed 5-Year Outer Continental Shelf (OCS) Oil and Gas Leasing Program for 2012–2017

AGENCY: Bureau of Ocean Energy Management, Interior.

ACTION: Notice of availability.

SUMMARY: The Bureau of Ocean Energy Management (BOEM) announces the availability of and requests comments on the Proposed 5-Year OCS Oil and Gas Leasing Program for 2012–2017 (''Proposed Program''). This is part of a multi-step process required by law before the Secretary of the Interior may approve a new 5-year program. BOEM is publishing a Notice of Availability of the 5-Year Draft Programmatic Environmental Impact Statement (PEIS) concurrently with this notice.

DATES: Please submit comments and information to BOEM no later than February 8, 2012.

Public Comment Procedure

BOEM will accept comments in one of two formats: By mail or via our Internet commenting system. Please submit your comments using only one of these formats, and include full names and addresses. Comments submitted by other means may not be considered. We will not consider anonymous

comments, and we will make available for inspection in their entirety all comments submitted by organizations and businesses or by individuals identifying themselves as representatives of organizations and businesses.

Our practice is to make comments, including the names and home addresses of respondents, available for public review. An individual commenter may ask that we withhold his or her name, home address, or both from the public record, and we will honor such a request to the extent allowable by law. If you submit comments and wish us to withhold such information, you must so state prominently at the beginning of your submission.

ADDRESSES:

By Mail—Mail comments and information to: Steven Textoris, 5-Year Program Manager, Bureau of Ocean Energy Management (MS–4010), Room 3120, 381 Elden Street, Herndon, Virginia 20170. Please label your comments and the packaging in which they are submitted as ''Comments on Proposed 5-Year Program for 2012–2017.'' If you submit any privileged or proprietary information to be treated as confidential, please mark the envelope, ''Contains Confidential Information.''

By Internet—Federal eRulemaking Portal: *http://www.regulations.gov*. Under the tab ''More Search Options,'' click ''Advanced Docket Search,'' then select ''Bureau of Ocean Energy Management'' from the agency drop-down menu, then click the submit button. In the Docket ID column, select BOEM–2011–0119 to submit public comments and to view related materials available for the proposed program. Information on using *Regulations.gov,* including instructions for accessing documents, submitting comments, and viewing the docket after the close of the comment period, is available through the site's ''User Tips'' link. The BOEM will post all comments.

FOR FURTHER INFORMATION CONTACT: Steven Textoris, 5-Year Program Manager, at (703) 787–1215.

SUPPLEMENTARY INFORMATION: This is the second proposal in the usual statutory preparation process for a new program to succeed the current program, which expires on June 30, 2012. The first proposal—the Draft Proposed Program—was issued in January 2009, for a 60-day comment period that was extended by 180 days and closed on September 21, 2009.

Section 18 of the Outer Continental Shelf Lands Act (OCSLA) specifies a multi-step process of consultation and analysis that must be completed before the Secretary of the Interior may approve a new 5-year Program. The required steps following this notice include the development of a proposed final program to be submitted to the Congress and the President, with Secretarial approval of a new program no sooner than 60 days after such submission. Pursuant to the National Environmental Policy Act (NEPA), BOEM also is preparing a PEIS for the new 5-Year Program. The draft PEIS is being issued with this Proposed Program and a final PEIS will be issued with the Proposed Final Program.

BOEM requests comments from states, local governments, native groups, Tribes, the oil and gas industry, Federal agencies, environmental and other interest organizations, and all other interested parties, including the public, to assist in the preparation of a 5-Year OCS Oil and Gas Leasing Program for 2012–2017.

The Proposed Program document may be downloaded from the BOEM Web site at *www.BOEM.gov.* The document also is available as part of our electronic commenting system noted above. Hard copies may be obtained by contacting the 5-Year Program Office at (703) 787–1215.

Along with the proposed program, three technical documents will be posted on *http://www.BOEM.gov* for public review and comment: (1) *Economic Analysis for the OCS 5-Year Program 2012–2017: Theory and Methodology* (BOEM 050–2011), a paper containing a more detailed description of the methodology used for the Net Benefits analysis; (2) *Energy Alternatives and the Environment, 2012–2017* (BOEM 051–2011), a paper expanding upon the energy alternatives likely to replace OCS oil and gas in the absence of a new program; and (3) the draft *Revised Offshore Environmental Cost Model (OECM): Guide to Cost and Benefit Calculations,* a document designed to provide decisionmakers with information about the relative environmental and social costs associated with having, or not having, an offshore leasing program absent a low probability, high impact event. This is relevant to weighing the costs and benefits of the Proposed Program. A report documenting the final version of the OECM will be published prior to the Proposed Final Program.

The use of the acronym ''BOEM'' includes, within its meaning, BOEM's predecessor agencies, the Bureau of Ocean Energy Management, Regulation and Enforcement and the Minerals Management Service.

Summary of the Proposed Program

The proposed program document analyzes the six planning areas proposed for 2012–2017 leasing in the Proposed Program and reflects the consideration of the analysis of all 12 areas in the DPP. The Proposed Program schedules a total of 15 OCS lease sales in six areas (three areas off Alaska and three areas in the Gulf of Mexico). Maps A and B show the areas proposed for leasing. Table A lists the location and timing of the proposed lease sales in areas under consideration for leasing.

Alaska Region

In the Alaska Region, the program proposes one sale in the Beaufort Sea in 2015, excluding at least two whaling deferral areas from leasing consideration, as was done in the 2009 DPP. In the Chukchi Sea, the proposed program schedules one sale in 2016, excluding at least a 25-mile buffer area along the coast, as presented in the 2009 DPP.

The Cook Inlet Planning Area is included on the schedule as a special interest sale, which may occur as early as 2013. Before BOEM proceeds with the presale process, it will issue a request for interest and comments and will move forward if there is sufficient industry interest. If there is insufficient interest, a request may be issued again the following year, and so on through the 5-year schedule, until the sale is held or the schedule expires.

Gulf of Mexico Region

In the Central and Western Gulf of Mexico Planning Areas, which remain the two areas of highest resource potential and interest, the Proposed Program schedules annual areawide lease sales of all unleased available acreage, starting in 2012 in the Western Gulf and 2013 in the Central Gulf. There are two lease sales scheduled in the portion of the Eastern Gulf of Mexico Planning Area that is not under congressional moratorium, pursuant to the Gulf of Mexico Energy Security Act of 2006 (GOMESA). The Proposed Program area includes the 2008 Sale 224 Area (mandated by GOMESA) and a sliver to the southeast of that area.

TABLE A—PROPOSED PROGRAM FOR 2012–2017—LEASE SALE SCHEDULE

Sale No.	Area	Year
229	Western Gulf of Mexico	2012
227	Central Gulf of Mexico	2013
244	Cook Inlet	2013
233	Western Gulf of Mexico	2013
231	Central Gulf of Mexico	2014
225	Eastern Gulf of Mexico	2014
238	Western Gulf of Mexico	2014
235	Central Gulf of Mexico	2015
242	Beaufort Sea	2015
246	Western Gulf of Mexico	2015
241	Central Gulf of Mexico	2016
226	Eastern Gulf of Mexico	2016
237	Chukchi Sea	2016
248	Western Gulf of Mexico	2016
247	Central Gulf of Mexico	2017

Assurance of Fair Market Value

Section 18 of the OCSLA requires receipt of fair market value for OCS oil and gas leases and the rights they convey. A series of decisions related to the timing of a lease sale, the leasing framework, sale terms, and bid adequacy provide the foundation for ensuring receipt of fair market value. Under the Proposed Program, BOEM intends to use a two-phase post-sale bid evaluation process that has been in effect since 1983, while studying and evaluating refinements and alternative approaches throughout the 2012–2017 5-Year Program. The flexibility incorporated into the Proposed Program allows BOEM to evaluate alternatives with respect to delaying a sale area, choosing a leasing framework, and setting the fiscal terms and conditions by individual lease sale, based on a current assessment of market and resource conditions.

Information Requested

We request all interested and affected parties to comment on the size, timing, and location of leasing and the procedures for assuring fair market value that are included in the Proposed 5-Year OCS Oil and Gas Leasing Program for 2012–2017. Respondents who submitted information in response to previous requests for comments on the preparation of this 5-year program may wish to reference that information, as appropriate, rather than repeating it in their comments on the proposed program. We also invite comments and suggestions on how to proceed with the section 18 analysis for the Proposed Final Program.

Section 18(g) of the OCSLA authorizes confidential treatment of privileged or proprietary information that is submitted to BOEM. In order to protect the confidentiality of such information, respondents should include it as an attachment to other comments submitted and mark it appropriately. On request, BOEM will treat such information as confidential from the time of its receipt until 5 years after approval of the new leasing program, subject to the standards of the Freedom of Information Act. BOEM will not treat as confidential any aggregate summaries of privileged or proprietary information, the names of respondents, or any comments not marked by the respondent as confidential.

Next Steps in the Process

BOEM plans to issue the proposed final program and final PEIS in the summer of 2012. Sixty days later, the Secretary may approve the new 5-year Program.

Dated: November 7, 2011.

Tommy P. Beaudreau,

Director, Bureau of Ocean Energy Management.

BILLING CODE 4310–MR–P

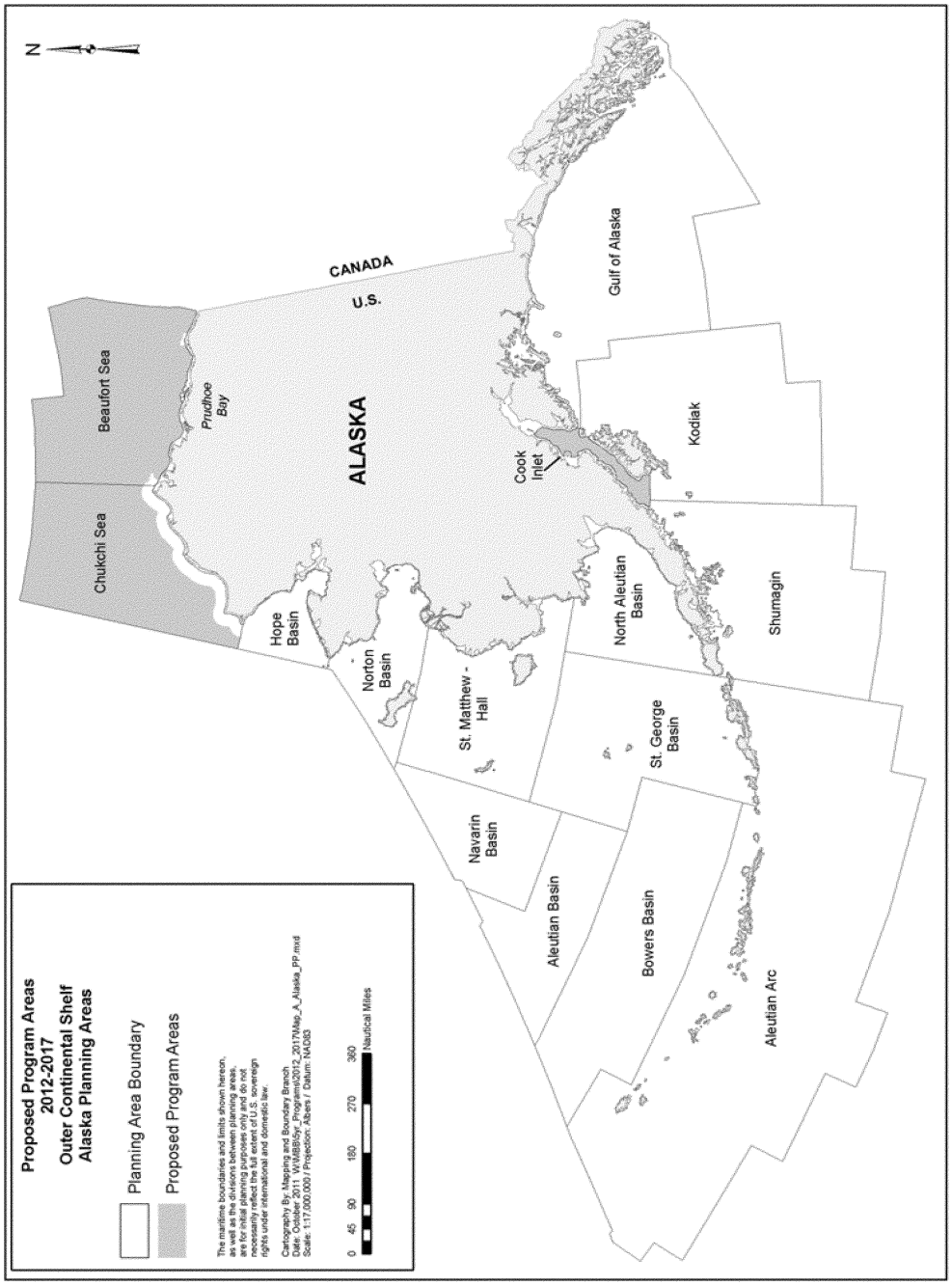

Map A – Alaska Program Areas

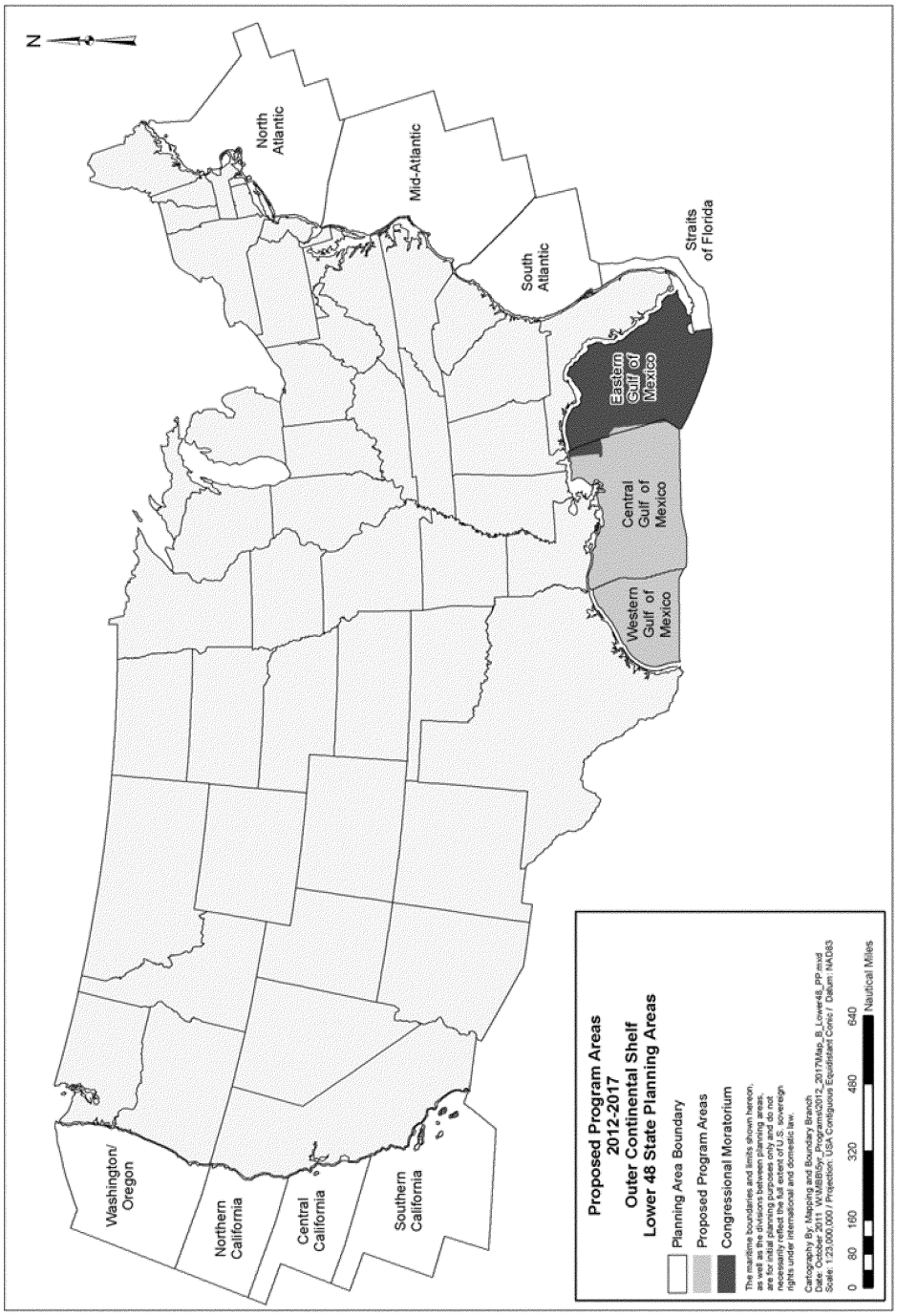

Map B – Lower 48 State Program Areas

[FR Doc. 2011–29151 Filed 11–9–11; 8:45 am]

BILLING CODE 4310–MR–C

DEPARTMENT OF THE INTERIOR

Fish and Wildlife Service

[FWS–R8–ES–2011–N234; 80221–1113–0000–F5]

Endangered Species Recovery Permit Applications

AGENCY: Fish and Wildlife Service, Interior.

ACTION: Notice of receipt of permit applications; request for comment.

SUMMARY: We, the U.S. Fish and Wildlife Service, invite the public to comment on the following applications to conduct certain activities with endangered species. With some exceptions, the Endangered Species Act (Act) prohibits activities with endangered and threatened species unless a Federal permit allows such activity. The Act also requires that we invite public comment before issuing these permits.

DATES: Comments on these permit applications must be received on or before December 12, 2011.

ADDRESSES: Written data or comments should be submitted to the U.S. Fish and Wildlife Service, Endangered Species Program Manager, Region 8, 2800 Cottage Way, Room W–2606, Sacramento, CA 95825 (telephone: 916–414–6464; fax: 916–414–6486). Please refer to the respective permit number for each application when submitting comments.

FOR FURTHER INFORMATION CONTACT: Daniel Marquez, Fish and Wildlife Biologist; see **ADDRESSES** (telephone: 760–431–9440; fax: 760–431–9624).

SUPPLEMENTARY INFORMATION: The following applicants have applied for scientific research permits to conduct certain activities with endangered species under section 10(a)(1)(A) of the Act (16 U.S.C. 1531 *et seq.*). We seek review and comment from local, State, and Federal agencies and the public on the following permit requests.

Applicant

Permit No. TE–126141

Applicant: Craig A. Stockwell, Fargo, North Dakota.

The applicant requests an amendment to take (survey, trap, handle, capture, mark, collect biological samples, release, transport, and sacrifice) the Pharump poolfish (*Empetrichtys latos*) in conjunction with surveys, genetic research, mesocosm experiments, and population monitoring activities throughout the range of the species in Nevada, for the purpose of enhancing the species' survival.

Permit No. TE–787716

Applicant: Scott B. Tremor, Santee, California.

The applicant requests a permit to take (harass by survey, capture, handle, and release) the Pacific pocket mouse (*Perognathus longimembris pacificus*) in conjunction with surveys and population monitoring activities throughout the range of each species in California, for the purpose of enhancing the species' survival.

Permit No. TE–50510A

Applicant: Geoffrey D. Cline, Oakhurst, California.

The applicant requests a permit to take (capture, handle, and release) the California tiger salamander (*Ambystoma californiense*) in conjunction with survey activities throughout the range of the species in California, for the purpose of enhancing the species' survival.

Permit No. TE–144960

Applicant: Strange Resource Management, Wilseyville, California.

The applicant requests a permit to take (capture, handle, and release) the California tiger salamander (*Ambystoma californiense*) in conjunction with survey activities throughout the range of each species in California for the purpose of enhancing the species' survival.

Permit No. TE–101743

Applicant: Daniel Edelstein, Novato, California.

The applicant requests an amendment to a permit to take (capture, handle, and release) the California tiger salamander (*Ambystoma californiense*) in conjunction with survey activities throughout the range of the species in California for the purpose of enhancing the species' survival.

Permit No. TE–071216

Applicant: Reed V. Smith, Ventura, California.

The applicant requests a permit to take (survey, locate and monitor nests) the California least tern (*Sterna antillarum browni*) in conjunction with population monitoring activities within State Park Lands in Ventura County, California, for the purpose of enhancing the species' survival.

Permit No. TE–148555

Applicant: Phillip Brylski, Irvine, California.

The applicant requests an amendment to a permit to take (survey, capture, handle, and release) the Fresno kangaroo rat (*Dipodomys nitratoides exilis*), Tipton kangaroo rat (*Dipodomys nitratoides nitratoides*), giant kangaroo rat (*Dipodomys ingens*), Amargosa vole (*Microtus californicus scirpensis*), salt marsh harvest mouse (*Reithrodontomys raviventris*), and riparian woodrat (*Neotoma fuscipes riparia*) in conjunction with survey activities throughout the range of each species in California for the purpose of enhancing the species' survival.

Permit No. TE–54631A

Applicant: California Department of Fish and Game, Fresno, California.

The applicant requests a permit to carry out the following actions in conjunction with surveys, population monitoring, and research activities throughout the range of each of the following species in California for the purpose of enhancing the species' survival:

- Take (capture, collect, and kill) the Conservancy fairy shrimp (*Branchinecta conservatio*), longhorn fairy shrimp (*Branchinecta longiantenna*), Riverside fairy shrimp (*Streptocephalus woottoni*), San Diego fairy shrimp (*Branchinecta sandiegonensis*), and vernal pool tadpole shrimp (*Lepidurus packardi*);
- Take (survey, live trap, capture, handle, and release) the California tiger salamander (*Ambystoma californiense*), blunt-nosed leopard lizard (*Gambelia silus*) Tipton kangaroo rat (*Dipodomys nitratoides nitratoides*), giant kangaroo rat (*Dipodomys ingens*), Fresno kangaroo rat (*Dipodomys nitratoides exilis*), Morro Bay kangaroo rat (*Dipodomys heermanni morroensis*), Buena Vista lake shrew (*Sorex ornatus relictus*), riparian woodrat (*Neotoma fuscipes riparia*) and riparian brush rabbit (*Sylvilagus bachmani riparius*);
- Take (survey, capture, handle, release, and use baited camera stations and baited hair snare traps) San Joaquin kit fox (*Vulpes macrotis mutica*);
- Take (survey, capture, handle, photo document, and release) the Kern primrose sphinx moth (*Euproserpinus euterpe*); and
- Remove and reduce to possession from lands under Federal jurisdiction the following species:

Caulanthus californicus (California jewel-flower),
Chloropyron palmatum (palmate-bracted bird's-beak),
Eremalche kernensis (Kern mallow),
Monolopia (=*Lembertia*) *congdonii* (San Joaquin wooly-threads),
Opuntia basilaris var. *treeleasei* (Bakersfield cactus),
Orcuttia pilosa (hairy Orcutt grass),
Pseudobahia bahiifolia (Hartweg's golden sunburst),
Sidalcea keckii (Keck's checker-mallow),
Sidalcea keckii (Green's tuctoria).

Permit No. TE–54614A–0

Applicant: California Department of Fish and Game, Bishop, California

The applicant requests a permit to take (capture, handle, mark, recapture, disease study, and release) the Amargosa vole (*Microtus californicus scirpensis*) in conjunction with surveys, research and population monitoring activities in Inyo County, California, for the purpose of enhancing the species' survival.

Permit No. TE–59889A–0

Applicant: Melissa C. Odell, San Diego, California.

The applicant requests a permit to take (capture, handle, and release) the California tiger salamander (*Ambystoma californiense*) and take (capture, collect, and kill) the Conservancy fairy shrimp (*Branchinecta conservatio*), the longhorn fairy shrimp (*Branchinecta longiantenna*), and the vernal pool tadpole shrimp (*Lepidurus packardi*) in conjunction with survey activities throughout the range of each species in California for the purpose of enhancing the species' survival.

Permit No. TE–142435

Applicant: Debra M. Shier, Topanga, California.

The applicant requests a permit to take (harass by survey, capture, handle, transport, conduct mate pairings, captive breed, perform behavioral experiments, conduct physiological validation of stress using an Adrenocorticotrophic Hormone Challenge Test [ACTH challenge], conduct disease risk assessments, and release to the wild) the Pacific pocket mouse (*Perognathus longimembris pacificus*) in conjunction with research, captive propagation and population monitoring activities throughout the range of each species in California for the purpose of enhancing the species' survival.

Public Comments

We invite public review and comment on each of these recovery permit applications. Comments and materials we receive will be available for public inspection, by appointment, during normal business hours at the address listed in the **ADDRESSES** section of this notice.

Before including your address, phone number, email address, or other personal identifying information in your comment, you should be aware that your entire comment—including your personal identifying information—may be made publicly available at any time. While you can ask us in your comment to withhold your personal identifying information from public review, we cannot guarantee that we will be able to do so.

Michael Long,

Acting Regional Director, Region 9, Sacramento, California.

[FR Doc. 2011–29167 Filed 11–9–11; 8:45 am]

BILLING CODE 4310–55–P

DEPARTMENT OF THE INTERIOR

Bureau of Land Management

[LLIDT03000–L14300000.EU0000; IDI–35249]

Notice of Intent To Prepare an Environmental Assessment for a Possible Land Use Plan Amendment To Provide for a Proposed Direct Land Sale in Blaine County, ID

AGENCY: Bureau of Land Management, Interior.

ACTION: Notice of intent.

SUMMARY: In compliance with the National Environmental Policy Act of 1969, as amended, and the Federal Land Policy and Management Act of 1976 (FLPMA), as amended, the Bureau of Land Management (BLM), Twin Falls District, Shoshone Field Office, Shoshone, Idaho intends to prepare an Environmental Assessment (EA) that will analyze the amendment of the 1981 Sun Valley Management Framework Plan, and by this notice is announcing the beginning of the scoping process to solicit public comments and identify issues.

DATES: This notice initiates the public scoping process for the land use plan amendment and associated EA. Comments on issues may be submitted in writing until December 12, 2011. The date(s) and location(s) of any scoping meetings will be announced at least 15 days in advance through local media, mailings to interested parties, and on the BLM Idaho Web site at: *http://www.blm.gov/id/st/en/info/nepa.html.* In order to be included in the EA, all comments must be received prior to the close of the 30 day scoping period or 15 days after the last public meeting, whichever is later. The BLM will provide additional opportunities for public participation upon publication of the EA.

ADDRESSES: Comments on issues and planning criteria related to the land use plan amendment should be addressed to Ruth A. Miller, BLM Shoshone Field Manager, 400 West F Street, Shoshone, Idaho 83352.

FOR FURTHER INFORMATION CONTACT: Tara Hagen, Realty Specialist, BLM Shoshone Field Office, *telephone:* (208) 732–7205; *address:* 400 West F Street, Shoshone, Idaho 83352. Please contact Tara Hagen to have your name added to our mailing list. Persons who use a telecommunications device for the deaf (TDD) may call the Federal Information Relay Service (FIRS) at 1–(800) 877–8339 to contact the above individual during normal business hours. The FIRS is available 24 hours a day, 7 days a week, to leave a message or question with the above individual. You will receive a reply during normal business hours.

SUPPLEMENTARY INFORMATION: The plan amendment and associated EA will address a proposed land sale in Blaine County, Idaho. The adjacent private landowner, Point of Rocks Ranch, has submitted a proposal to the BLM to consider disposing of the following-described land by direct sale, in accordance with Sections 203 and 209 of the FLPMA, as amended, (43 U.S.C. 1713 and 1714) and implementing regulations at 43 CFR part 2700, at no less that the appraised fair market value:

Boise Meridian

T. 1 S., R. 20 E.,

Sec. 15, that portion of public land in the NW¼SW¼ lying south of the North Picabo Road.

The area described contains approximately 3.4 acres in Blaine County.

On October 26, 2010, BLM published a Notice of Realty Action proposing a direct sale of the above-described land, which segregated the land from appropriation under the public land laws, including the mining laws, except the sale provisions of the FLPMA. The segregative effect will terminate upon issuance of a patent, publication in the **Federal Register** of a termination of the segregation, or October 26, 2012, unless extended by the BLM State Director in accordance with 43 CFR 2711.1–2(d) prior to the termination date. As part of its consideration of the proposed direct sale of this land, BLM will consider whether the Sun Valley Management Framework Plan should be amended to address the sale. To the extent possible, this land use planning process will be integrated with the ongoing NEPA process for the proposed sale. This notice initiates the public scoping process for the plan amendment and associated EA.

The purpose of the public scoping process is to determine relevant issues that will influence the scope of the environmental analysis, including alternatives, and guide the process for developing the EA. The public is invited to provide scoping comments on the issues that should be addressed in the preparation of the plan amendment, including: Lands, wildlife, migratory birds, recreation, wilderness, range, minerals, cultural resources, watershed/soils, threatened/endangered species, and hazardous materials. The BLM will use an interdisciplinary approach to develop the plan amendment in order to consider the variety of resource issues and concerns identified. Specialists with expertise in the following disciplines will be involved in the planning process: Rangeland management, minerals and geology, forestry, outdoor recreation, archaeology, paleontology, wildlife and fisheries, land and realty, hydrology, soils, sociology and economics.

Native American Tribal consultations will be conducted in accordance with policy, and Tribal concerns will be given due consideration, including impacts on Indian trust assets. Federal, State, and local agencies, along with other stakeholders that may be interested or affected by the BLM's decision on this project are invited to participate in the scoping process and, if eligible, may request or be requested by the BLM to participate as a cooperating agency.

Before including your address, phone number, email address, or other personal identifying information in your comment, you should be advised that your entire comment—including your personal identifying information—may be made publicly available at any time. While you can ask us in your comment to withhold from public review your personal identifying information, we cannot guarantee that we will be able to do so.

Authority: 40 CFR 1501.7, 1508.22, and 43 CFR 1610.2.

Ruth A. Miller,

Shoshone Field Manager.

[FR Doc. 2011–29171 Filed 11–9–11; 8:45 am]

BILLING CODE 4310–GG–P

DEPARTMENT OF THE INTERIOR

Bureau of Land Management

[LLMT926000–L14200000–BJ0000]

Notice of Filing of Plats of Survey; Montana

AGENCY: Bureau of Land Management, Interior.

ACTION: Notice of filing of plats of survey.

SUMMARY: The Bureau of Land Management (BLM) will file the plat of survey of the lands described below in the BLM Montana State Office, Billings, Montana, on December 12, 2011.

DATES: Protests of the survey must be filed before December 12, 2011 to be considered.

ADDRESSES: Protests of the survey should be sent to the Branch of Cadastral Survey, Bureau of Land Management, 5001 Southgate Drive, Billings, Montana 59101–4669.

FOR FURTHER INFORMATION CONTACT: Marvin Montoya, Cadastral Surveyor, Branch of Cadastral Survey, Bureau of Land Management, 5001 Southgate Drive, Billings, Montana 59101–4669, *telephone* (406) 896–5124 or (406) 896–5009, *Marvin_Montoya@blm.gov.* Persons who use a telecommunications device for the deaf (TDD) may call the Federal Information Relay Service (FIRS) at 1–(800) 877–8339 to contact the above individual during normal business hours. The FIRS is available 24 hours a day, 7 days a week, to leave a message or question with the above individual. You will receive a reply during normal business hours.

SUPPLEMENTARY INFORMATION: This survey was executed at the request of the Bureau of Land Management, Dillon Field Office, and was necessary to determine federal interest lands.

The lands we surveyed are:

Principal Meridian, Montana

T. 2 S., R. 3 W.

The plat, in one sheet, representing the dependent resurvey of Mineral Survey No. 6594, Alice Lode, Township 2 South, Range 3 West, Principal Meridian, Montana, was accepted October 28, 2011. We will place a copy of the plat, in one sheet, in the open files. It will be available to the public as a matter of information. If the BLM receives a protest against this survey, as shown on this plat, in one sheet, prior to the date of the official filing, we will stay the filing pending our consideration of the protest. We will not officially file this plat, in one sheet, until the day after we have accepted or dismissed all protests and they have become final, including decisions or appeals.

Authority: 43 U.S.C. chapter 3.

Steve L. Toth,

Acting Chief Cadastral Surveyor, Division of Resources.

[FR Doc. 2011–29165 Filed 11–9–11; 8:45 am]

BILLING CODE 4310–DN–P

DEPARTMENT OF THE INTERIOR

Bureau of Land Management

[LLAK910000–L13100000.PP0000–L.X.SS.052L0000]

Notice of Public Meeting, BLM–Alaska Resource Advisory Council; Correction

AGENCY: Bureau of Land Management, Alaska State Office, Interior.

ACTION: Notice of public meeting; correction.

SUMMARY: The Bureau of Land Management (BLM) published a document in the **Federal Register** of October 24, 2011, concerning announcement of the BLM Alaska Resource Advisory Council (RAC) meeting on November 29 and 30, 2011. The document contained incorrect dates and times.

FOR FURTHER INFORMATION CONTACT: Thom Jennings, (907) 271–3335.

Correction

In the **Federal Register** of October 24, 2011, in FR Doc. 2011–27394, on page 65747, in the third column, correct the **DATES** caption to read:

DATES: The meeting will be held November 29 and 30, 2011, at the Fairbanks Princess Riverside Lodge, 4477 Pikes Landing Road, Fairbanks, Alaska 99709–4619. On November 29, the meeting starts at 9:30 a.m. in the Jade meeting room and the council will accept public comment from 3:30 p.m.–4:30 p.m. On November 30, the meeting begins in the same location at 9 a.m.

Dated: November 4, 2011.

Bud C. Cribley,

Acting State Director.

[FR Doc. 2011–29120 Filed 11–9–11; 8:45 am]

BILLING CODE 4310–JA–P

DEPARTMENT OF THE INTERIOR

Bureau of Land Management

[LLMTC 00900.L16100000.DP0000]

Notice of Public Meeting, Eastern Montana Resource Advisory Council Meeting

AGENCY: Montana, Billings and Miles City Field Offices, Bureau of Land Management, Interior.

ACTION: Notice of public meeting.

SUMMARY: In accordance with the Federal Land Policy and Management Act (FLPMA) and the Federal Advisory Committee Act of 1972 (FACA), the U.S. Department of the Interior, Bureau of Land Management (BLM) Eastern Montana Resource Advisory Council (RAC), will meet as indicated below.

DATES: The next regular meeting of the Eastern Montana Resource Advisory Council will be held on Dec. 7, 2011, in Miles City, Montana. The meeting will start at 8 a.m. and adjourn at approximately 3:30 p.m.

ADDRESSES: When determined, the meeting location will be announced in a news release.

FOR FURTHER INFORMATION CONTACT: Mark Jacobsen, Public Affairs Specialist, BLM Eastern Montana/Dakotas District, 111 Garryowen Road, Miles City, Montana, 59301. *Telephone:* (406) 233–2831, *mark_jacobsen@blm.gov.* Persons who use a telecommunications device for the deaf (TDD) may call the Federal Information Relay Service (FIRS) at 1–(800) 677–8339 to contact the above individual during normal business hours. The FIRS is available 24 hours a day, 7 days a week to leave a message or question with the above individual. You will receive a reply during normal business hours.

SUPPLEMENTARY INFORMATION: The 15-member Council advises the Secretary of the Interior through the Bureau of Land Management on a variety of planning and management issues associated with public land management in Montana. At these meetings, topics will include: Miles City

and Billings Field Office manager updates, council member briefings, work sessions and other issues that the council may raise. All meetings are open to the public and the public may present written comments to the Council. Each formal Council meeting will also have time allocated for hearing public comments. Depending on the number of persons wishing to comment and time available, the time for individual oral comments may be limited. Individuals who plan to attend and need special assistance, such as sign language interpretation, tour transportation or other reasonable accommodations should contact the BLM as provided above.

Melodie Lloyd,

Acting State Director,

[FR Doc. 2011–29170 Filed 11–9–11; 8:45 am]

BILLING CODE 4310–DN–P

INTERNATIONAL TRADE COMMISSION

[DN 2854]

Certain Devices With Secure Communication Capabilities, Components Thereof, and Products Containing the Same; Receipt of Complaint; Solicitation of Comments Relating to the Public Interest

AGENCY: U.S. International Trade Commission.

ACTION: Notice.

SUMMARY: Notice is hereby given that the U.S. International Trade Commission has received a complaint entitled *In Re Certain Devices with Secure Communication Capabilities, Components Thereof, and Products Containing the Same,* DN 2854; the Commission is soliciting comments on any public interest issues raised by the complaint.

FOR FURTHER INFORMATION CONTACT: James R. Holbein, Secretary to the Commission, U.S. International Trade Commission, 500 E Street SW., Washington, DC 20436, *telephone* (202) 205–2000. The public version of the complaint can be accessed on the Commission's electronic docket (EDIS) at *http://edis.usitc.gov,* and will be available for inspection during official business hours (8:45 a.m. to 5:15 p.m.) in the Office of the Secretary, U.S. International Trade Commission, 500 E Street, SW., Washington, DC 20436, *telephone* (202) 205–2000.

General information concerning the Commission may also be obtained by accessing its Internet server (*http://www.usitc.gov*). The public record for this investigation may be viewed on the Commission's electronic docket (EDIS) at *http://edis.usitc.gov.* Hearing-impaired persons are advised that information on this matter can be obtained by contacting the Commission's TDD terminal on (202) 205–1810.

SUPPLEMENTARY INFORMATION: The Commission has received a complaint filed on behalf of VirnetX, Inc. on November 4, 2011. The complaint alleges violations of section 337 of the Tariff Act of 1930 (19 U.S.C. 1337) in the importation into the United States, the sale for importation, and the sale within the United States after importation of certain devices with secure communication capabilities, components thereof, and products containing the same. The complaint names Apple Inc. of Cupertino, CA, as respondent.

The complainant, proposed respondent, other interested parties, and members of the public are invited to file comments, not to exceed five pages in length, on any public interest issues raised by the complaint. Comments should address whether issuance of an exclusion order and/or a cease and desist order in this investigation would negatively affect the public health and welfare in the United States, competitive conditions in the United States economy, the production of like or directly competitive articles in the United States, or United States consumers.

In particular, the Commission is interested in comments that:

(i) Explain how the articles potentially subject to the orders are used in the United States;

(ii) Identify any public health, safety, or welfare concerns in the United States relating to the potential orders;

(iii) Indicate the extent to which like or directly competitive articles are produced in the United States or are otherwise available in the United States, with respect to the articles potentially subject to the orders; and

(iv) Indicate whether Complainant, Complainant's licensees, and/or third party suppliers have the capacity to replace the volume of articles potentially subject to an exclusion order and a cease and desist order within a commercially reasonable time.

Written submissions must be filed no later than by close of business, five business days after the date of publication of this notice in the **Federal Register**. There will be further opportunities for comment on the public interest after the issuance of any final initial determination in this investigation.

Persons filing written submissions must file the original document and 12 true copies thereof on or before the deadlines stated above with the Office of the Secretary. Submissions should refer to the docket number (''Docket No. 2854'') in a prominent place on the cover page and/or the first page. The Commission's rules authorize filing submissions with the Secretary by facsimile or electronic means only to the extent permitted by section 201.8 of the rules (see Handbook for Electronic Filing Procedures, *http://www.usitc.gov/secretary/fed_reg_notices/rules/documents/handbook_on_electronic_filing.pdf.* Persons with questions regarding electronic filing should contact the Secretary (202) 205–2000).

Any person desiring to submit a document to the Commission in confidence must request confidential treatment. All such requests should be directed to the Secretary to the Commission and must include a full statement of the reasons why the Commission should grant such treatment. *See* 19 CFR 201.6. Documents for which confidential treatment by the Commission is properly sought will be treated accordingly. All nonconfidential written submissions will be available for public inspection at the Office of the Secretary.

This action is taken under the authority of section 337 of the Tariff Act of 1930, as amended (19 U.S.C. 1337), and of sections 201.10 and 210.50(a)(4) of the Commission's Rules of Practice and Procedure (19 CFR 201.10, 210.50(a)(4)).

By order of the Commission.

Issued: November 7, 2011.

James R. Holbein,

Secretary to the Commission.

[FR Doc. 2011–29121 Filed 11–9–11; 8:45 am]

BILLING CODE 7020–02–P

DEPARTMENT OF JUSTICE

Notice of Lodging of Consent Decree under the Comprehensive Environmental Response, Compensation, and Liability Act

Notice is hereby given that on October 28, 2011 a proposed Consent Decree with the estate of Donald E. Horne, K.C. 1986 Limited Partnership, and DEH Merrywood Company, in *United States of America* v. *Donald E. Horne, et al.,* Civil Action No. 4:05–00497, was lodged with the United States District Court for the Western District of Missouri. The United States filed the Complaint on May 27, 2005 on behalf of

the Administrator of the Environmental Protection Agency pursuant to the Comprehensive Environmental Response, Compensation, and Liability Act of 1980, as amended, 42 U.S.C. 9601, *et seq.,* seeking recovery of costs incurred in responding to the release or threat of release of hazardous substances at or in connection with the Armour Road Superfund Site located at 2251 Armour Road North Kansas City, Missouri. The Complaint alleged claims against Donald E. Horne (who died in 2007) and five other defendants.

The Consent Decree addresses only the claims against the estate of Donald E. Horne, K.C. 1986 Limited Partnership, and DEH Merrywood Company. The Consent Decree will resolve the United States' claims against these settling Defendants for the Site in return for payments equaling 36.7% of the assets of Donald E. Horne's estate as described in the Consent Decree.

For thirty (30) days after the date of this publication, the Department of Justice will receive comments relating to the Consent Decree. Comments should be addressed to the Assistant Attorney General, Environment and Natural Resources Division, and either emailed to pubcomment-ees.enrd@usdoj.gov or mailed to P.O. Box 7611, U.S. Department of Justice, Washington, DC 20044–7611. In either case, the comments should refer to *United States of America* v. *Donald E. Horne, et al.,* DOJ Ref No. 90–11–3–08035/1.

During the comment period, the Consent Decree may be examined on the following Department of Justice Web site: *http://www.justice.gov/enrd/Consent_Decrees.html.* A copy of the Consent Decree may also be obtained by mail from the Consent Decree Library, P.O. Box 7611, U.S. Department of Justice, Washington, DC 20044–7611, or by faxing or emailing a request to Tonia Fleetwood (tonia.fleetwood@usdoj.gov), fax no. (202) 514–0097, phone confirmation number (202) 514–1547. In requesting a copy from the Consent Decree Library, please enclose a check in the amount of $14.50 (25 cents per page reproduction cost) payable to the United States Treasury or, if by email or fax, please forward a check in that amount to the Consent Decree Library at the stated address.

Robert E. Maher, Jr.,

Assistant Section Chief, Environmental Enforcement Section, Environment and Natural Resources Division.

[FR Doc. 2011–29100 Filed 11–9–11; 8:45 am]

BILLING CODE 4410–15–P

DEPARTMENT OF JUSTICE

Office of Justice Programs

[OJP (NIJ) Docket No. 1573]

Ballistic-Resistant Body Armor Standard Workshop

AGENCY: National Institute of Justice, DOJ.

ACTION: Notice.

SUMMARY: The National Institute of Justice (NIJ) and the National Institute of Standards and Technology (NIST) are jointly hosting a workshop focused on *NIJ Standard-0101.06, Ballistic Resistance of Body Armor,* and the discussion is directed toward manufacturers, certification bodies, and test laboratories. This workshop is being held specifically to discuss with interested parties the upcoming revision of this standard and to receive input, comments, and recommendations.

The workshop will be held on Tuesday, November 29, 2011 at NIST, 100 Bureau Drive, Gaithersburg MD, Building 101, Lecture Room A. The workshop will begin with a general session from 9 a.m. to 11 a.m. Following the general session, individual 30-minute breakout session will be offered from 11:30 a.m. to 2:30 a.m. for those interested in the following:

(1) One-on-one conversation with NIJ leadership.

(2) One-on-one discussion with Compliance Testing Program personnel.

(3) One-on-one discussion with personnel leading development of the revised standard.

Time slots for individual breakout sessions may be requested from the registration page indicated below. Additional time slots will be made available if needed to accommodate attendee requests.

Workshop discussions will be documented and published on *http://www.justnet.org.* Information shared during the individual breakout sessions that NIJ views as beneficial to the broader body armor community will be summarized as part of the workshop notes. Contributors of comments will not be identified in the workshop notes. Each attendee is advised that it is the responsibility of the contributor to protect any information that they may consider proprietary during both the workshop and any individual breakout session in which they may participate.

Space is limited at this workshop, and as a result, only 50 participants will be allowed to register for the general session. Individual time slots will be available on the registration page. We request that each organization limit their representatives to no more than two per organization. Exceptions to this limit may occur, should space allow. Participants planning to attend are responsible for their own travel arrangements.

Participants are strongly encouraged to come prepared to ask questions and to voice suggestions and concerns. Registration information may be found at *http://www.justnet.org/Pages/BA-Workshops-Registration-2011.aspx.* Registration will close on November 21, 2011.

DATES: The workshop will be held on Tuesday, November 29, 2011, beginning at 9 a.m. The workshop will begin with a general session from 9 a.m. to 11 a.m. Following the general session, individual 30-minute breakout session will be offered from 11:30 a.m. to 2:30 p.m.

ADDRESSES: National Institute of Standards and Technology (NIST), 100 Bureau Drive, Gaithersburg MD, Building 101, Lecture Room A.

FOR FURTHER INFORMATION CONTACT: Casandra Robinson, National Institute of Justice, by telephone at 202–305–2596 [*Note:* this is not a toll-free telephone number], or by email at *casandra.robinson@usdoj.gov.*

Kristina Rose,

Deputy Director, National Institute of Justice.

[FR Doc. 2011–29068 Filed 11–9–11; 8:45 am]

BILLING CODE 4410–18–P

DEPARTMENT OF LABOR

Bureau of Labor Statistics

Proposed Collection, Comment Request

ACTION: Notice.

SUMMARY: The Department of Labor, as part of its continuing effort to reduce paperwork and respondent burden, conducts a pre-clearance consultation program to provide the general public and Federal agencies with an opportunity to comment on proposed and/or continuing collections of information, in accordance with the Paperwork Reduction Act of 1995 (PRA95) [44 U.S.C. 3506(c) (2)(A)]. This program helps to ensure that requested data can be provided in the desired format, reporting burden (time and financial resources) is minimized, collection instruments are clearly understood, and the impact of collection requirements on respondents can be properly assessed. The Bureau of Labor Statistics (BLS) is soliciting comments concerning the proposed extension of

the ''Job Openings and Labor Turnover Survey.'' A copy of the proposed information collection request (ICR) can be obtained by contacting the individual listed below in the Addresses section of this notice.

DATES: Written comments must be submitted to the office listed in the Addresses section below on or before January 9, 2012.

ADDRESSES: Send comments to Amelia Vogel, BLS Clearance Officer, Division of Management Systems, Bureau of Labor Statistics, Room 4080, 2 Massachusetts Avenue, NE., Washington, DC 20212. Written comments also may be transmitted by fax to (202) 691–5111 (this is not a toll free number).

FOR FURTHER INFORMATION CONTACT: Amelia Vogel, BLS Clearance Officer, at (202) 691–6138 (this is not a toll free number). (See **ADDRESSES** section.)

SUPPLEMENTARY INFORMATION:

I. Background

The Job Openings and Labor Turnover Survey (JOLTS) collects data on job vacancies, labor hires, and labor separations. As the monthly JOLTS time series grow longer, their value in assessing the business cycle, the difficulty that employers have in hiring workers, and the extent of the mismatch between the unused supply of available workers and the unmet demand for labor by employers will increase. The study of the complex relationship between job openings and unemployment is of particular interest to researchers. While these two measures are expected to move in opposite directions over the course of the business cycle, their relative levels and movements depend on the efficiency of the labor market in matching workers and jobs.

Along with the job openings rate, trends in hires and separations may broadly identify which aggregate industries face the tightest labor markets. Quits rates, the number of persons who quit during an entire month as a percentage of total employment, may provide clues about workers' views of the labor market or their success in finding better jobs. In addition, businesses will be able to compare their own turnover rates to the national, regional, and major industry division rates.

The BLS uses the JOLTS form to gather employment, job openings, hires, and total separations from business establishments. The information is collected once a month at the BLS Data Collection Center (DCC) in Atlanta, Georgia. The information is collected using Computer Assisted Telephone Interviewing (CATI), Touch-tone Data Entry (TDE), FAX, email, and Web. An establishment is in the sample for 24 consecutive months.

II. Current Action

Office of Management and Budget clearance is being sought for the JOLTS. The BLS is requesting an extension to the existing clearance for the JOLTS. There are no major changes being made to the forms, procedures, data collection methodology, or other aspects of the survey.

III. Desired Focus of Comments

The Bureau of Labor Statistics is particularly interested in comments that:

- Evaluate whether the proposed collection of information is necessary for the proper performance of the functions of the agency, including whether the information will have practical utility.
- Evaluate the accuracy of the agency's estimate of the burden of the proposed collection of information, including the validity of the methodology and assumptions used.
- Enhance the quality, utility, and clarity of the information to be collected.
- Minimize the burden of the collection of information on those who are to respond, through the use of appropriate automated, electronic, mechanical, or other technological collection techniques or other forms of information technology, *e.g.,* permitting electronic submissions of responses.

Type of Review: Extension of a currently approved collection.

Agency: Bureau of Labor Statistics.

Title: Job Openings and Labor Turnover Survey.

OMB Number: 1220–0170.

Affected Public: Federal Government; State, Local, or Tribal governments; Businesses or other for-profit; Not-for-profit institutions; Small businesses and organizations.

Affected public	Total respondents	Frequency	Total responses	Average time per response	Estimated total burden
Private	9,017	Monthly	108,204	10 min.	18,034
State, Local, & Tribal Gov't	1,415	Monthly	16,980	10 min.	2,830
Federal Gov't	393	Monthly	4,716	10 min.	786
TOTALS	10,825	Monthly	129,900	10 min.	21,650

Total Burden Cost (capital/startup): $0.

Total Burden Cost (operating/maintenance): $0.

Comments submitted in response to this notice will be summarized and/or included in the request for Office of Management and Budget approval of the information collection request; they also will become a matter of public record.

Signed at Washington, DC, this 31st day of October 2011.

Kimberley Hill,

Chief, Division of Management Systems, Bureau of Labor Statistics.

[FR Doc. 2011–29102 Filed 11–9–11; 8:45 am]

BILLING CODE 4510–24–P

DEPARTMENT OF LABOR

Occupational Safety and Health Administration

[Docket No. OSHA–2011–0187]

Electrical Standards for Construction and General Industry; Extension of the Office of Management and Budget's (OMB) Approval of the Information Collection (Paperwork) Requirements

AGENCY: Occupational Safety and Health Administration (OSHA), Labor.

ACTION: Request for public comments.

SUMMARY: OSHA solicits public comments concerning its request for an extension of the information collection requirements contained in the Electrical Standards for Construction (29 CFR part 1926, Subpart K) and for General Industry (29 CFR part 1910, Subpart S). The Standards address safety procedures for installation and maintenance of electric utilization equipment that prevent death and serious injuries among construction and general industry workers in the workplace caused by electrical hazards.

DATES: Comments must be submitted (postmarked, sent, or received) by January 9, 2012.

ADDRESSES:

Electronically: You may submit comments and attachments electronically at *http://www.regulations.gov,* which is the Federal eRulemaking Portal. Follow the instructions online for submitting comments.

Facsimile: If your comments, including attachments, are not longer than 10 pages, you may fax them to the OSHA Docket Office at (202) 693–1648.

Mail, hand delivery, express mail, messenger, or courier service: When using this method, you must submit a copy of your comments and attachments to the OSHA Docket Office, Docket No. OSHA–2011–0187, U.S. Department of Labor, Occupational Safety and Health Administration, Room N–2625, 200 Constitution Avenue NW., Washington, DC 20210. Deliveries (hand, express mail, messenger, and courier service) are accepted during the Department of Labor's and Docket Office's normal business hours, 8:15 a.m. to 4:45 p.m., e.t.

Instructions: All submissions must include the Agency name and OSHA docket number (OSHA–2011–0187) for the Information Collection Request (ICR). All comments, including any personal information you provide, are placed in the public docket without change, and may be made available online at *http://www.regulations.gov.* For further information on submitting comments see the ''Public Participation'' heading in the section of this notice titled **SUPPLEMENTARY INFORMATION**.

Docket: To read or download comments or other material in the docket, go to *http://www.regulations.gov* or the OSHA Docket Office at the address above. All documents in the docket (including this **Federal Register** notice) are listed in the *http://www.regulations.gov* index; however, some information (*e.g.,* copyrighted material) is not publicly available to read or download through the Web site. All submissions, including copyrighted material, are available for inspection and copying at the OSHA Docket Office. You may also contact Theda Kenney at the address below to obtain a copy of the ICR.

FOR FURTHER INFORMATION CONTACT: Theda Kenney or Todd Owen, Directorate of Standards and Guidance, OSHA, U.S. Department of Labor, Room N–3609, 200 Constitution Avenue NW., Washington, DC 20210; telephone (202) 693–2222.

SUPPLEMENTARY INFORMATION:

I. Background

The Department of Labor, as part of its continuing effort to reduce paperwork and respondent (*i.e.,* employer) burden, conducts a preclearance consultation program to provide the public with an opportunity to comment on proposed and continuing information collection requirements in accordance with the Paperwork Reduction Act of 1995 (44 U.S.C. 3506(c)(2)(A)).

This program ensures that information is in the desired format, reporting burden (time and costs) is minimal, collection instruments are clearly understood, and OSHA's estimate of the information collection burden is accurate. The Occupational Safety and Health Act of 1970 (the OSH Act) (29 U.S.C. 651 *et seq.*) authorizes information collection by employers as necessary or appropriate for enforcement of the Act or for developing information regarding the causes and prevention of occupational injuries, illnesses, and accidents (29 U.S.C. 657). The OSH Act also requires that OSHA obtain such information with minimum burden upon employers, especially those operating small businesses, and to reduce to the maximum extent feasible unnecessary duplication of efforts in obtaining information (29 U.S.C. 657).

The information collection requirements specified by the Electrical Standards for Construction and for General Industry alert workers to the presence and types of electrical hazards in the workplace, thereby preventing serious injury and death by electrocution. The information collection requirements in these Standards involve the following: The employer using electrical equipment that is marked with the manufacturer's name, trademark, or other descriptive markings that identify the producer of the equipment, and marking the equipment with the voltage, current, wattage, or other ratings necessary; requiring each disconnecting means for motors and appliances to be marked legibly to indicate its purpose, unless located and arranged so the purpose is evident; requiring the entrances to rooms and other guarded locations containing exposed live parts to be marked with conspicuous warning signs forbidding unqualified persons from entering; and, for construction employers only, establishing and implementing the assured equipment grounding conductor program instead of using ground-fault circuit interrupters.

II. Special Issues for Comment

OSHA has a particular interest in comments on the following issues:

- Whether the proposed information collection requirements are necessary for the proper performance of the Agency's functions, including whether the information is useful;
- The accuracy of OSHA's estimate of the burden (time and cost) of the information collection requirements, including the validity of the methodology and assumptions used;
- The quality, utility, and clarity of the information collected; and
- Ways to minimize the burden on employers who must comply; for example, by using automated or other technological information collection and transmission techniques.

III. Proposed Actions

OSHA is proposing to increase the existing burden hours estimated for the Electrical Standards for Construction and for General Industry. This increase in burden hours from 151,172 hours to 170,098 hours, a total increase of 18,926 hours, is due to the increase in the time it takes to acquire and post signs. The data used is primarily based on the final economic analysis (FEA) prepared during the revision of the final rule of 29 CFR part 1910, Subpart S. There was an increase in the cost of the labels from $2.00 to $3.75 and OSHA has added the cost of caution and warning signs. The total cost over a five-year period to the employer is $12,034,166 (or $2,406,833 per year). The Agency will summarize any comments submitted in response to this notice, and will include this summary in the request to OMB to extend the approval of the information collection requirements contained in these Standards.

Type of Review: Extension of a currently approved collection.

Title: Electrical Standards for Construction (29 CFR part 1926, Subpart K) and for General Industry (29 CFR part 1910, Subpart S).

OMB Number: 1218–0130.

Affected Public: Business or other for-profits; Not-for-profit institutions; Federal Government; State, local, or Tribal governments.

Number of Respondents: 500,000.

Frequency of Response: Occasionally.

Total Responses: 2,511,139.

Average Time per Response: Varies from three minutes (.08 hour) to post and construct each sign to four hours to document a hazardous classified location by a certified electrical engineer.

Estimated Total Burden Hours: 170,098.

Estimated Cost Operation and Maintenance): $2,406,833.

IV. Public Participation—Submission of Comments on this Notice and Internet Access to Comments and Submissions

You may submit comments in response to this document as follows:

(1) Electronically at *http://www.regulations.gov,* which is the Federal eRulemaking Portal; (2) by facsimile (fax); or (3) by hard copy. All comments, attachments, and other material must identify the Agency name and the OSHA docket number for the ICR (Docket No. OSHA–2011–0187). You may supplement electronic submissions by uploading document files electronically. If you wish to mail additional materials in reference to an electronic or facsimile submission, you must submit them to the OSHA Docket Office (see the section of this notice titled **ADDRESSES**). The additional materials must clearly identify your electronic comments by your name, date, and the docket number so the Agency can attach them to your comments.

Because of security procedures, the use of regular mail may cause a significant delay in the receipt of comments. For information about security procedures concerning the delivery of materials by hand, express delivery, messenger, or courier service, please contact the OSHA Docket Office at (202) 693–2350, (TTY (877) 889–5627).

Comments and submissions are posted without change at *http://www.regulations.gov.* Therefore, OSHA cautions commenters about submitting personal information such as social security numbers and dates of birth. Although all submissions are listed in the *http://www.regulations.gov* index, some information (*e.g.,* copyrighted material) is not publicly available to read or download through this Web site. All submissions, including copyrighted material, are available for inspection and copying at the OSHA Docket Office. Information on using the *http://www.regulations.gov* Web site to submit comments and access the docket is available at the Web site's ''User Tips'' link. Contact the OSHA Docket Office for information about materials not available through the Web site, and for assistance in using the Internet to locate docket submissions.

V. Authority and Signature

David Michaels, Ph.D., MPH, Assistant Secretary of Labor for Occupational Safety and Health, directed the preparation of this notice. The authority for this notice is the Paperwork Reduction Act of 1995 (44 U.S.C. 3506 *et seq.*) and Secretary of Labor's Order No. 5–2010 (75 FR 55355).

Signed at Washington, DC, on November 4, 2011.

David Michaels,

Assistant Secretary of Labor for Occupational Safety and Health.

[FR Doc. 2011–29065 Filed 11–9–11; 8:45 am]

BILLING CODE 4510–26–P

NATIONAL FOUNDATION ON THE ARTS AND THE HUMANITIES

Meetings of Humanities Panel

AGENCY: The National Endowment for the Humanities.

ACTION: Notice of additional meeting.

SUMMARY: Pursuant to the provisions of the Federal Advisory Committee Act (Pub. L. 92–463, as amended), notice is hereby given that the following meeting of the Humanities Panel will be held at the Old Post Office, 1100 Pennsylvania Avenue NW., Washington, DC 20506.

FOR FURTHER INFORMATION CONTACT: Michael P. McDonald, Advisory Committee Management Officer, National Endowment for the Humanities, Washington, DC 20506; telephone (202) 606–8322. Hearing-impaired individuals are advised that information on this matter may be obtained by contacting the Endowment's TDD terminal on (202) 606–8282.

SUPPLEMENTARY INFORMATION: The proposed meeting is for the purpose of panel review, discussion, evaluation and recommendation on applications for financial assistance under the National Foundation on the Arts and the Humanities Act of 1965, as amended, including discussion of information given in confidence to the agency by the grant applicants. Because the proposed meeting will consider information that is likely to disclose trade secrets and commercial or financial information obtained from a person and privileged or confidential and/or information of a personal nature the disclosure of which would constitute a clearly unwarranted invasion of personal privacy, pursuant to authority granted me by the Chairman's Delegation of Authority to Close Advisory Committee meetings, dated July 19, 1993, I have determined that the meeting will be closed to the public pursuant to subsections (c)(4), and (6) of section 552b of Title 5, United States Code.

Date: November 14, 2011.

Time: 10:30 a.m. to 11:30 a.m.

Room: 421.

Program: This meeting, which will be by teleconference, will review an application for the Civil War Sesquicentennial in America's Historical and Cultural Organizations Grants Program, submitted to the Division of Public Programs at the August 17, 2011 deadline.

Michael P. McDonald,

Advisory Committee, Management Officer.

[FR Doc. 2011–28532 Filed 11–9–11; 8:45 am]

BILLING CODE 7536–01–P

NATIONAL SCIENCE FOUNDATION

National Science Board; Sunshine Act Meetings

The National Science Board's Subcommittee on Facilities (SCF), pursuant to NSF regulations (45 CFR part 614), the National Science Foundation Act, as amended (42 U.S.C. 1862n-5), and the Government in the Sunshine Act (5 U.S.C. 552b), hereby gives notice in regard to the scheduling of a meeting for the transaction of National Science Board business, as follows:

DATE AND TIME: Monday, November 14, 2011 to 5 p.m., EST.

SUBJECT MATTER: Discussion of Mid-scale Instrumentation Report.

STATUS: Open.

This meeting will be held by teleconference originating at the National Science Board Office, National Science Foundation, 4201Wilson Blvd., Arlington, VA 22230. A room will be available for the public and NSF staff to listen-in on this teleconference meeting. All visitors must contact the Board Office at least *one day* prior to the meeting to arrange for a visitor's badge and obtain the room number. Call (703) 292–7000 to request your badge, which will be ready for pick-up at the visitor's desk on the day of the meeting. All visitors must report to the NSF visitor desk at the 9th and N. Stuart Streets entrance to receive their visitor's badge on the day of the teleconference.

Please refer to the National Science Board Web site *(http://www.nsf.gov/nsb/notices/)* for information or schedule updates, or contact: Blane Dahl, National Science Foundation, 4201Wilson Blvd., Arlington, VA 22230. *Telephone:* (703) 292–7000.

Ann Bushmiller,

Senior Counsel to the National Science Board.

[FR Doc. 2011–29344 Filed 11–8–11; 4:15 pm]

BILLING CODE 7555–01–P

NATIONAL TRANSPORTATION SAFETY BOARD

SES Performance Review Board

AGENCY: National Transportation Safety Board.

ACTION: Notice.

SUMMARY: Notice is hereby given of the appointment of members of the National Transportation Safety Board, Performance Review Board (PRB).

FOR FURTHER INFORMATION CONTACT: Emily T. Carroll, Chief, Human Resources Division, Office of Administration, National Transportation Safety Board, 490 L'Enfant Plaza, SW., Washington, DC 20594–0001, (202) 314–6233.

SUPPLEMENTARY INFORMATION: Section 4314(c)(1) through (5) of Title 5, United States Code requires each agency to establish, in accordance with regulations prescribed by the Office of Personnel Management, one or more SES Performance Review Boards. The board reviews and evaluates the initial appraisal of a senior executive's performance by the supervisor and considers recommendations to the appointing authority regarding the performance of the senior executive.

The following have been designated as members of the Performance Review Board of the National Transportation Safety Board:

The Honorable Christopher A. Hart, Vice Chairman, National Transportation Safety Board; PRB Chair.

The Honorable Earl Weener, Member, National Transportation Safety Board.

David Tochen, General Counsel, National Transportation Safety Board.

Dr. John Cavolowsky, Director, Airspace Systems Program Office, Aeronautics Research Mission Directorate, National Aeronautics and Space Administration.

Jerold Gidner, Deputy Director, Office of Strategic Employee and Organizational Development, Department of the Interior.

David L. Mayer, Managing Director, National Transportation Safety Board.

The Honorable Mark Rosekind, Member, National Transportation Safety Board. (Alternate).

Florence Carr, Deputy Managing Director, Federal Maritime Commission. (Alternate).

Dated: November 3, 2011.

Candi Bing,

Federal Register Coordinator.

[FR Doc. 2011–29081 Filed 11–9–11; 8:45 am]

BILLING CODE P

NUCLEAR REGULATORY COMMISSION

[Docket No. 50–391; NRC–2008–0369]

Draft Supplement 2 to Final Environmental Statement Related to the Operation of Watts Bar Nuclear Plant, Unit 2; Tennessee Valley Authority

AGENCY: Nuclear Regulatory Commission (NRC).

ACTION: Draft environmental statement; opportunity to comment and public meeting.

SUMMARY: The U.S. Nuclear Regulatory Commission (NRC) is requesting comments on NUREG–0498, ''Final Environmental Statement, Supplement 2, Related to the Operation of Watts Bar Nuclear Plant [WBN], Unit 2—Draft Report for Comment'' (draft SFES). The NRC will hold a public meeting on the draft SFES on December 8, 2011.

DATES: Submit comments by December 27, 2011. Comments received after this date will be considered if it is practical to do so, but the NRC is able to ensure consideration only for comments received on or before this date.

ADDRESSES: Please include Docket ID NRC–2008–0369 in the subject line of your comments. For additional instructions on submitting comments and instructions on accessing documents related to this action, see ''Submitting Comments and Accessing Information'' in the **SUPPLEMENTARY INFORMATION** section of this document. You may submit comments by any of the following methods:

- *Federal Rulemaking Web Site:* Go to *http://www.regulations.gov* and search for documents filed under Docket ID NRC–2008–0369. Address questions about NRC dockets to Carol Gallagher, *telephone:* (301) 492–3668; *email: Carol.Gallagher@nrc.gov.*
- *Mail comments to:* Cindy Bladey, Chief, Rules, Announcements, and Directives Branch (RADB), Office of Administration, Mail Stop: TWB–05–B01M, U.S. Nuclear Regulatory Commission, Washington, DC 20555–0001.
- *Fax comments to:* RADB at (301) 492–3446.
- *Verbal comments at:* Public meeting on December 8, 2011. See Section IV, Submitting Comments at Public Meeting, of this document for more information regarding the public meeting.

FOR FURTHER INFORMATION CONTACT: Carmen G. Fells, Project Manager, Environmental Review and Guidance Update Branch, Division of License Renewal, U.S. Nuclear Regulatory Commission, Washington, DC 20555–0001; *telephone:* (301) 415–6337; *email: Carmen.Fells@nrc.gov.*

SUPPLEMENTARY INFORMATION:

I. Submitting Comments and Accessing Information

Comments submitted in writing or in electronic form will be posted on the NRC Web site and on the Federal rulemaking Web site, *http://www.regulations.gov.* Because your comments will not be edited to remove any identifying or contact information, the NRC cautions you against including any information in your submission that you do not want to be publicly disclosed.

The NRC requests that any party soliciting or aggregating comments received from other persons for submission to the NRC inform those persons that the NRC will not edit their comments to remove any identifying or contact information, and therefore, they should not include any information in their comments that they do not want publicly disclosed.

You can access publicly available documents related to this document using the following methods:

- *NRC's Public Document Room (PDR):* The public may examine and have copied, for a fee, publicly available documents at the NRC's PDR, Room O1–F21, One White Flint North, 11555 Rockville Pike, Rockville, Maryland 20852.
- *NRC's Agencywide Documents Access and Management System (ADAMS):* Publicly available documents created or received at the NRC are available online in the NRC Library at *http://www.nrc.gov/reading-rm/adams.html.* From this page, the public can gain entry into ADAMS, which provides text and image files of the NRC's public documents. If you do not have access to ADAMS or if there are problems in accessing the documents located in ADAMS, contact the NRC's PDR reference staff at 1–(800) 397–4209, (301) 415–4737, or by email to *pdr.resource@nrc.gov.* The draft SFES is available electronically under ADAMS Accession Number ML112980199.
- *Federal Rulemaking Web Site:* Public comments and supporting materials related to this notice can be found at *http://www.regulations.gov* by searching on Docket ID NRC–2008–0369.

II. Background

The Tennessee Valley Authority (TVA or the applicant) submitted its Final Supplemental Environmental Impact Statement for the Completion and Operation of WBN Unit 2 (June 2007)

(FSEIS) by letter dated February 15, 2008 (ADAMS Accession No. ML080510469), pursuant to Part 51 of Title 10 of the Code of the Federal Regulations (10 CFR).

On June 30, 1976, TVA submitted an application for an operating license for WBN Unit 2, pursuant to 10 CFR Part 50. An updated operating license application was submitted on March 4, 2009. The proposed action in response to the updated application is the issuance of an operating license that would authorize TVA to possess, use, and operate a second light-water nuclear reactor (the facility), WBN Unit 2, located on the applicant's site in Rhea County, Tennessee. The WBN Unit 2 would operate at a steady-state power level of 3411 megawatts thermal.

A notice of receipt and availability of the updated application, which included the FSEIS, was published in the **Federal Register** on May 1, 2009 (74 FR 20350). A notice of intent to prepare a supplement to the final environmental statement, which was prepared and published in 1978 and to conduct the scoping process was published in the **Federal Register** on September 11, 2009 (74 FR 46799). On October 6, 2009, the NRC held two scoping meetings in Sweetwater, Tennessee, to obtain public input on the scope of the environmental review. The NRC also solicited comments from Federal, State, Tribal, regional, and local agencies.

III. Purpose

The purpose of this document is to inform the public that a draft SFES related to the review of the operating license application has been prepared in accordance with 10 CFR 51.92 and to provide the public an opportunity to comment.

IV. Submitting Comments at Public Meeting

The NRC staff will hold a public meeting to present an overview of the draft SFES and to accept public comments on the document. The public meeting will be held at the Magnuson Hotel at 1421 Murrays Chapel Road in Sweetwater, Tennessee, on Thursday, December 8, 2011. The meeting will consist of two sessions, which will cover the same subjects. The sessions will convene at 2 p.m. and 6:30 p.m. and will continue until 4 p.m. and 8:30 p.m., as necessary. The meeting will be transcribed and will include: (1) A presentation of the contents of the draft SFES and (2) the opportunity for interested government agencies, organizations, and individuals to provide comments on the draft SFES. Additionally, the NRC staff will host informal discussions 1 hour before the start of each meeting session. No formal comments on the draft SFES will be accepted during the informal discussions. To be considered, comments must be provided either at the transcribed public meeting sessions or by any of the methods provided in the **ADDRESSES** section of this document. Persons may register to attend or present oral comments at the meeting by contacting Ms. Carmen Fells, by telephone at 1–(800) 368–5642, extension 6337, or by email at *Carmen.Fells@nrc.gov* no later than December 1, 2011. Ms. Fells will need to be contacted no later than November 28, 2011, if special equipment or accommodations are needed to attend or present information at the public meeting, so that the NRC staff can determine whether the request can be accommodated.

Dated at Rockville, Maryland, this 2nd day of November 2011.

For the Nuclear Regulatory Commission.

Stephen J. Campbell,

Chief, Watts Bar Special Projects Branch, Division of Operating Reactor Licensing, Office of Nuclear Reactor Regulation.

[FR Doc. 2011–29130 Filed 11–9–11; 8:45 am]

BILLING CODE 7590–01–P

NUCLEAR REGULATORY COMMISSION

[NRC–2011–0258]

Proposed Alternative Soils Standards for the Uravan, Colorado Uranium Mill

AGENCY: Nuclear Regulatory Commission.

ACTION: Uranium milling alternative standards.

SUMMARY: By letter dated October 10, 2007, the Colorado Department of Public Health and the Environment (CDPHE)'s, Hazardous Materials and Waste Management Division (the Division) submitted a proposal for alternative standards for soil clean up in four areas of the Uravan Site in Montrose County, Colorado. The Division approved the proposed alternative standards and requested the U.S. Nuclear Regulatory Commission's (NRC or the Commission) concurrence. Colorado's proposed alternative soil standards are to leave the remaining radioactive contamination in place in these four areas without any further remediation. The NRC staff has determined that Colorado's proposal constitutes use of alternative standards. Under Section 274o of the Atomic Energy Act of 1954, as amended (the Act), the Commission must make a determination that such alternatives will achieve a level of stabilization and containment of the sites concerned, and a level of protection for public health, safety, and the environment from radiological and non-radiological hazards associated with such sites, after notice and opportunity for public hearing. Through this action, the Commission intends to fulfill both the notice and opportunity for public hearing provisions of Section 274o.

DATES: Submit comments by December 12, 2011. Comments received after this date will be considered if it is practical to do so, but the Commission cannot assure consideration of comments received after this date.

ADDRESSES: Please include Docket ID NRC–2011–0258 in the subject line of your comments. For additional instructions on submitting comments and instructions on accessing documents related to this action, see ''Submitting Comments and Accessing Information'' in the **SUPPLEMENTARY INFORMATION** section of this document. You may submit comments by any one of the following methods:

- *Federal Rulemaking Web site:* Go to *http://www.regulations.gov* and search for documents filed under Docket ID NRC–2011–0258. Address questions about NRC dockets to Carol Gallagher, telephone: (301) 492–3668; email: *Carol.Gallagher@nrc.gov*.
- *Mail comments to:* Cindy Bladey, Chief, Rules, Announcements, and Directives Branch (RADB), Office of Administration, Mail Stop: TWB–05–B01M, U.S. Nuclear Regulatory Commission, Washington, DC 20555–0001.
- *Fax comments to:* RADB at (301) 492–3446.

FOR FURTHER INFORMATION CONTACT: Dennis M. Sollenberger, Office of Federal and State Materials and Environmental Management Programs, U.S. Nuclear Regulatory Commission, Washington, DC 20555–0001, telephone: (301) 415–2819; email: *Dennis.Sollenberger@nrc.gov*.

SUPPLEMENTARY INFORMATION:

Submitting Comments and Accessing Information

Comments submitted in writing or in electronic form will be posted on the NRC Web site and on the Federal rulemaking Web site, *http://www.regulations.gov*. Because your comments will not be edited to remove any identifying or contact information, the NRC cautions you against including any information in your submission that

you do not want to be publicly disclosed.

The NRC requests that any party soliciting or aggregating comments received from other persons for submission to the NRC inform those persons that the NRC will not edit their comments to remove any identifying or contact information, and therefore, they should not include any information in their comments that they do not want publicly disclosed.

You can access publicly available documents including comments related to this proposed action using the following methods:

• *NRC's Public Document Room (PDR):* The public may examine and have copied, for a fee, publicly available documents at the NRC's PDR, O1–F21, One White Flint North, 11555 Rockville Pike, Rockville, Maryland 20852.

• *NRC's Agencywide Documents Access and Management System (ADAMS):* Publicly available documents created or received at the NRC are available online in the NRC Library at *http://www.nrc.gov/reading-rm/adams.html*. From this page, the public can gain entry into ADAMS, which provides text and image files of the NRC's public documents. If you do not have access to ADAMS or if there are problems in accessing the documents located in ADAMS, contact the NRC's PDR reference staff at 1–(800) 397–4209, (301) 415–4737, or by email to *pdr.resource@nrc.gov.*

• *Federal Rulemaking Web Site:* Public comments and supporting materials related to this proposed action can be found at *http://www.regulations.gov* by searching on Docket ID NRC–2011–0258.

Background

Since Section 274 of the Act was added in 1959, the Commission has entered into Agreements with 37 States that relinquished Federal authority. Under these agreements, regulatory authority was assumed by each State under State law to regulate certain radioactive materials within the State. The NRC periodically reviews the performance of the Agreement States to assure compliance with the provisions of Section 274. In 1978, the Act was further amended by adding a new subsection, Section 274o, which required Agreement States to specifically amend their Agreements to regulate uranium mill tailings (11e.(2) byproduct material). Six Agreement States have this authority as part of their Agreements. Under Section 274o of the Act, an Agreement State may adopt site-specific alternative standards with respect to sites at which ores are processed primarily for their source material content or which are used for the disposal of Section 11e.(2) byproduct material. Before the State can adopt alternative standards, the Commission must make the determination that the alternative standards will achieve a level of stabilization and containment of the site concerned, and the alternative standards will provide an adequate level of protection for public health, safety, and the environment from radiological and non-radiological hazards associated with the site. In addition, before making that determination, the NRC must provide notice and an opportunity for public hearing prior to approving the site-specific alternative standards. The Commission is using the notice and opportunity for comment process through this **Federal Register** notice to fulfill both the notice and opportunity for public hearing provisions of the Act.

This approach of allowing interested persons to provide comments before the Commission reaches a determination on the proposed alternative standards was approved by the Commission in the Staff Requirements Memorandum (SRM) for SECY–03–0025, ''Utah Alternative Groundwater Protection Standards; Process for Implementation of the Alternative Standards Provision in Section 274o of the Atomic Energy Act of 1954, As Amended,'' dated April 21, 2003 (ADAMS Accession Nos. ML032901053 for the SRM, ML032901045 for the SECY paper). The NRC staff is following the same process and has evaluated the Colorado proposal and has made a preliminary determination that the proposed alternative standards for the Uravan site in Colorado are acceptable.

Discussion

The Uravan site began operations in 1912 as a radium mill and later expanded operations to include extraction of other metals including uranium. The Uravan site was a licensed and operating mill at the time of passage of the Uranium Mill Tailings Radiation Control Act of 1978 (UMTRCA) (November 1978) making it subject to regulation under Title II of UMTRCA, even though some of the contamination was a result of practices going back to earlier operations. Specific mention of this situation and calls for active programs to address residual contamination during the operational phase are mentioned in NUREG–0706, Final Generic Environmental Impact Statement on Uranium Milling (ADAMS Accession Nos. ML032751663, ML032751667, ML032751669). This site is part of the UMTRCA Title II program administered by the CDPHE through its Section 274b Agreement with the NRC. The Uravan mill ceased operations in 1984 and began decommissioning planning and implementation. Under the Comprehensive Environmental Response, Compensation, and Liability Act (CERCLA), this site was listed on the National Priorities List (NPL) in 1986. The CDPHE is designated as the Lead Agency at this site under a Memorandum of Agreement signed with Region VIII of the U.S. Environmental Protection Agency (EPA) in 1986.

The site covers over 500 acres, most of which is in very steep, rugged terrain. The remainder of the site is dominated by the San Miguel River Valley. Remedial activities have concluded and the final cap is in place over the disposal areas.

Portions of the site will be titled to the U.S. Department of Energy (DOE) for Legacy Management. Other portions of the site will be transferred to other Federal agencies (*e.g.,* Bureau of Land Management (BLM)) or to a land trust for institutional management. Montrose County Road Y–11 bisects the site.

The CDPHE believes the licensee has remediated the site to the extent practical and has identified four discrete areas that are not in full compliance with the soil remediation standards. The licensee has proposed and CDPHE agrees that no further remediation is warranted for these areas.

This is the first site specific alternative standards to be proposed by an Agreement State (generic alternative standards were proposed and approved for Utah). There is a provision for alternative standards in the introduction to Appendix A of 6 CCR (Code of Colorado Regulations) 1007–1, part 18 (equivalent to Title 10 of the Code of Federal Regulations (CFR), part 40, Appendix A) which allows for ''alternates to the requirements with Commission approval.'' This is based on language found in Section 274o of the Act. Section 274o states in part that,

''* * * the State may adopt alternatives (including, where appropriate, site-specific alternatives) to the requirements adopted and enforced by the Commission for the same purpose if after notice and opportunity for public hearing, the Commission determines that such alternatives will achieve a level of stabilization and containment of the sites concerned, and a level of protection for public health, safety, and the environment from radiological and non-radiological hazards associated with such sites, which is equivalent to, to the extent practicable, or more stringent than the level which would be achieved by standards and requirements adopted and enforced by the Commission for the same purpose and any final standards promulgated by the Administrator of the EPA

in accordance with Section 275. Such alternative State requirements may take into account local or regional conditions, including geology, typography, hydrology, and meteorology.''

Similar language codifying this requirement can be found in 10 CFR 150.31(d).

The NRC's Office of Nuclear Materials Safety and Safeguards informed NRC's Region IV in 1988, in a memorandum titled, ''Use of Title I Supplemental Standards for Title II'' (ADAMS Accession No. ML111670171), that, if a request for alternative standards was to be considered, the application of 40 CFR 192.21, Supplemental Standards, as guidance would be appropriate. The Uravan Consent Decree and Remedial Action Plan approved by the federal district court in 1987, included the possible use of Applicable or Relevant and Appropriate Requirements (ARARs). If alternative standards are agreed to by the NRC, the alternative standards could be used as part of the basis for the State of Colorado and the EPA to proceed with delisting the Uravan site from the NPL.

Four discrete areas of the site (about 40 acres total) could not meet the standard for background level of radium-226 in soil, found in the Colorado Rules and Regulations Pertaining to Radiation Control, 6 CCR 1007–1, Part 18, Appendix A, Criterion 6. This standard is that the background level is not exceeded by more than 5 pCi/g (picocuries per gram) of radium-226 averaged over the first 15 centimeters (cm) below the surface and 15 pCi/g of radium-226 averaged over 15 cm thick layers more than 15 cm below the surface. The four discrete areas are referred to as: the Mill Hillside Area; A–Plant North Area; River Ponds Area; and County Road Y–11. The areas were remediated as best as practical, and the specifics are described in the licensee's report submitted to the CDPHE (ADAMS Accession No. ML081150505). The licensee proposed to the CDPHE that alternative standards be applied to these four areas of the Uravan site. The licensee's proposal to the CDPHE was to leave the remaining materials in place and conduct no further remediation.

The CDPHE has accepted the licensee's report and believes the areas were remediated to levels that are ALARA, and are protective of public health. This conclusion is further supported by applying the criteria for supplemental standards in UMTRCA Title I standards in 40 CFR 192.21, and through dose calculations for reasonable future use given the status of the areas after the termination of the specific license and long-term care of the site by DOE. The CDPHE recommended the application of the contemporary dose limit for restricted release found in the License Termination Rule (LTR), which in Colorado regulation is found at CCR (Code of Colorado Regulations) 1007–04, Section 61.3. Since the federal LTR explicitly excludes uranium milling facilities already subject to Appendix A to 10 CFR part 40 and since the licensee's proposed alternative standards were developed using the Title I supplemental standards that are specific to uranium milling facilities, the NRC staff does not recommend pursuing the use of the LTR standard for this uranium recovery facility.

Challenges to worker safety prevented additional remediation along the cliff face that makes up a majority of the Mill Hillside Area under consideration for alternate standards. Remediation was performed as much as possible and was terminated when safety to workers became too much of a risk, costs continued show diminishing returns, and concern arose that additional removal could cause mass wasting of the cliff face which would cause environmental harm to the riparian area and the San Miguel River. Two other areas, the River Ponds Area and the A–Plant North Area, were cleaned as much as possible prior to annual spring flooding that has since buried the areas under up to 3 feet of sediment (the San Miguel River is a free-flowing river and does not have any dams to control flow). This riparian area now hosts fauna and wildlife that would not be best served if remediation were to continue. The final area, County Road Y–11, has contaminated materials present at depths greater than 3 feet, assuring that routine maintenance activities of the road can be conducted without creating worker exposure. County Road Y–11 will remain under institutional controls agreed to by the County, BLM, and DOE.

The alternative standards will be protective even if institutional controls fail in the distant future. This is based on two limited assumptions: (1) The cliff face will not be developed for residential construction, and (2) the San Miguel River will not be relocated. Both of these assumptions are realistic.

All four areas have been cleaned to levels that are considered ALARA, will be under permanent institutional control, and meet the EPA supplemental standards requirements in 40 CFR 192.21. Additional cleanup work in the areas would present safety or environmental challenges with little corresponding reduction in dose. Therefore, the NRC staff believes the four areas are candidates for alternative standards.

The NRC staff evaluated Colorado's proposed alternate soil standards for the four discrete areas and the justification for the alternate soil standards for the Uravan Site in Montrose County, Colorado (CO RML 660–02). The individual areas are discussed in more detail in the NRC staff's assessment (ADAMS Accession No. ML11220A308).

Therefore, the NRC staff has made a preliminary determination that the State's proposal to leave the materials in place provides levels of protection to public health and safety and protection of the environment from radiological and non-radiological hazards associated with each of the four areas, that are equivalent to, to the extent practicable, or more stringent than levels which would be achieved by the standards and requirements adopted and enforced by the Commission for the same purpose (specifically the soil cleanup standards for radium) contained in 10 CFR Part 40, Appendix A and the Colorado requirements in 6 CCR 1007–1, Part 18, Appendix A.

Section 274o Hearing for Alternative Standards

The Commission has approved the use of a hearing process similar to the provisions in Subpart H of 10 CFR part 2 for the ''hearing'' component required by the last paragraph of Section 274o of the Act. The proposed alternate standards have been reviewed and agreed to by the State of Colorado. A hearing process similar to the provisions in Subpart H is not intended to duplicate the State's process; rather, it will be used to provide sufficient information for the Commission to make the determination required in Section 274o of the Act.

Pursuant to the hearing process set forth in Subpart H of 10 CFR part 2, the Commission is requesting information from interested members of the public on the alternative standards proposed by the State of Colorado of leaving the remaining residual soil contamination in place in the four designated areas, in lieu of clean up to the 5/15 pCi/g standard in 10 CFR part 40, Appendix A, Criterion 6.6. The NRC staff will evaluate the information received and provide the information to the Commission for a final determination. The issue under consideration is:

Do the Colorado proposed alterative soil standards for the four discrete areas of the Uravan site achieve a level of stabilization and containment of the sites concerned, and a level of protection for public health, safety and the environment from radiological and non-radiological hazards associated with

such sites, which is equivalent to, to the extent practicable, or more stringent than the level which would be achieved by standards and requirements adopted and enforced by the Commission for the same purpose and any final standards promulgated by the Administrator of the EPA in accordance with Section 275 of the Act?

Environmental Analysis

The environmental impact of a Commission determination that an Agreement State's alternative standards have been found to provide a level of protection that is equivalent to, to the extent practicable, or more stringent than standards promulgated by the NRC or the Administrator of the EPA under Section 275 of the Act is within the generic impact analysis conducted by the NRC and the EPA in promulgating their standards and the requirements (NUREG–0706, ''Final Generic Environmental Impact Statement on Uranium Milling,'' (ADAMS Accession Nos. ML032751663, ML032751667, and ML032751669) and EPA 520/1–83–008, ''Final Environmental Impact Statement for Standards for the Control of Byproduct Materials from Uranium Processing'' (ADAMS Accession Nos. ML032751396 and ML032751400)). Any site-specific application of alternative standards in Agreement States will be evaluated under the State's environmental assessment required of the State under Section 274o of the Act.

Dated at Rockville, Maryland, this 3rd day of November, 2011.

For the Nuclear Regulatory Commission.

Brian J. McDermott,

Director, Division of Materials Safety and State Agreements, Office of Federal and State Materials and Environmental Management Programs.

[FR Doc. 2011–29129 Filed 11–9–11; 8:45 am]

BILLING CODE 7590–01–P

POSTAL REGULATORY COMMISSION

[Docket No. A2012–41; Order No. 948]

Post Office Closing

AGENCY: Postal Regulatory Commission.

ACTION: Notice.

SUMMARY: This document informs the public that an appeal of the closing of the West Edmeston, New York post office has been filed. It identifies preliminary steps and provides a procedural schedule. Publication of this document will allow the Postal Service, petitioners, and others to take appropriate action.

DATES: November 14, 2011: Administrative record due (from Postal Service); November 29, 2011, 4:30 p.m., Eastern Time: Deadline for notices to intervene. *See* the Procedural Schedule in the **SUPPLEMENTARY INFORMATION** section for other dates of interest.

ADDRESSES: Submit comments electronically by accessing the ''Filing Online'' link in the banner at the top of the Commission's Web site (*http://www.prc.gov*) or by directly accessing the Commission's Filing Online system at *https://www.prc.gov/prc-pages/filing-online/login.aspx.* Commenters who cannot submit their views electronically should contact the person identified in the **FOR FURTHER INFORMATION CONTACT** section as the source for case-related information for advice on alternatives to electronic filing.

FOR FURTHER INFORMATION CONTACT: Stephen L. Sharfman, General Counsel, at (202) 789–6820 (case-related information) or *DocketAdmins@prc.gov* (electronic filing assistance).

SUPPLEMENTARY INFORMATION: Notice is hereby given that, pursuant to 39 U.S.C. 404(d), on October 27, 2011, the Commission received a petition for review of the Postal Service's determination to close the West Edmeston post office in West Edmeston, New York. The petition for review was filed by Jason Elias and the Concerned Citizens of West Edmeston (Petitioners) and is postmarked October 19, 2011. The Commission hereby institutes a proceeding under 39 U.S.C. 404(d)(5) and establishes Docket No. A2012–41 to consider Petitioners' appeal. If Petitioners would like to further explain their position with supplemental information or facts, Petitioners may either file a Participant Statement on PRC Form 61 or file a brief with the Commission no later than December 1, 2011.

Categories of issues apparently raised. Petitioners contend (1) Failure of the Postal Service to follow procedures required by law regarding the closures (*see* 39 U.S.C. 404(d)(5)(B)); and (2) that there are factual errors contained in the Final Determination.

After the Postal Service files the administrative record and the Commission reviews it, the Commission may find that there are more legal issues than those set forth above, or that the Postal Service's determination disposes of one or more of those issues. The deadline for the Postal Service to file the applicable administrative record with the Commission is November 14, 2011. *See* 39 CFR 3001.113. In addition, the due date for any responsive pleading by the Postal Service to this notice is November 14, 2011.

Availability; Web site posting. The Commission has posted the appeal and supporting material on its Web site at *http://www.prc.gov.* Additional filings in this case and participant's submissions also will be posted on the Web site, if provided in electronic format or amenable to conversion, and not subject to a valid protective order. Information on how to use the Commission's Web site is available online or by contacting the Commission's webmaster via telephone at (202) 789–6873 or via electronic mail at *prc-webmaster@prc.gov.*

The appeal and all related documents are also available for public inspection in the Commission's docket section. Docket section hours are 8 a.m. to 4:30 p.m., Eastern Time, Monday through Friday, except on Federal government holidays. Docket section personnel may be contacted via electronic mail at *prc-dockets@prc.gov* or via telephone at (202) 789–6846.

Filing of documents. All filings of documents in this case shall be made using the Internet (Filing Online) pursuant to Commission rules 9(a) and 10(a) at the Commission's Web site, *http://www.prc.gov,* unless a waiver is obtained. *See* 39 CFR 3001.9(a) and 3001.10(a). Instructions for obtaining an account to file documents online may be found on the Commission's Web site, *http://www.prc.gov,* or by contacting the Commission's docket section at *prc-dockets@prc.gov* or via telephone at (202) 789–6846.

Commission reserves the right to redact personal information which may infringe on an individual's privacy rights from documents filed in this proceeding.

Intervention. Persons, other than the Petitioners and respondents, wishing to be heard in this matter are directed to file a notice of intervention. *See* 39 CFR 3001.111(b). Notices of intervention in this case are to be filed on or before November 29, 2011. A notice of intervention shall be filed using the Internet (Filing Online) at the Commission's Web site, *http://www.prc.gov,* unless a waiver is obtained for hardcopy filing. *See* 39 CFR 3001.9(a) and 3001.10(a).

Further procedures. By statute, the Commission is required to issue its decision within 120 days from the date it receives the appeal. *See* 39 U.S.C. 404(d)(5). A procedural schedule has been developed to accommodate this statutory deadline. In the interest of expedition, in light of the 120-day decision schedule, the Commission may request the Postal Service or other participants to submit information or memoranda of law on any appropriate issue. As required by Commission rules, if any motions are filed, responses are

due 7 days after any such motion is filed. *See* 39 CFR 3001.21.

It is ordered:

1. The Postal Service shall file the applicable administrative record regarding this appeal no later than November 14, 2011.

2. Any responsive pleading by the Postal Service to this notice is due no later than November 14, 2011.

3. The procedural schedule listed below is hereby adopted.

4. Pursuant to 39 U.S.C. 505, Malin Moench is designated officer of the Commission (Public Representative) to represent the interests of the general public.

5. The Secretary shall arrange for publication of this notice and order and Procedural Schedule in the **Federal Register**.

By the Commission.

Shoshana M. Grove,

Secretary.

PROCEDURAL SCHEDULE

October 27, 2011	Filing of Appeal.
November 14, 2011	Deadline for the Postal Service to file the applicable administrative record in this appeal.
November 14, 2011	Deadline for the Postal Service to file any responsive pleading.
November 29, 2011	Deadline for notices to intervene (*see* 39 CFR 3001.111(b)).
December 1, 2011	Deadline for Petitioners' Form 61 or initial brief in support of petition (*see* 39 CFR 3001.115(a) and (b)).
December 21, 2011	Deadline for answering brief in support of the Postal Service (*see* 39 CFR 3001.115(c)).
January 5, 2011	Deadline for reply briefs in response to answering briefs (*see* 39 CFR 3001.115(d)).
January 12, 2011	Deadline for motions by any party requesting oral argument; the Commission will schedule oral argument only when it is a necessary addition to the written filings (*see* 39 CFR 3001.116).
February 16, 2012	Expiration of the Commission's 120-day decisional schedule (*see* 39 U.S.C. 404(d)(5)).

[FR Doc. 2011–29126 Filed 11–9–11; 8:45 am]

BILLING CODE 7710–FW–P

POSTAL REGULATORY COMMISSION

[Docket No. A2012–42; Order No. 949]

Post Office Closing

AGENCY: Postal Regulatory Commission.

ACTION: Notice.

SUMMARY: This document informs the public that an appeal of the closing of the Amoret, Missouri post office has been filed. It identifies preliminary steps and provides a procedural schedule. Publication of this document will allow the Postal Service, petitioners, and others to take appropriate action.

DATES: November 14, 2011: Administrative record due (from Postal Service); November 29, 2011, 4:30 p.m., Eastern Time: Deadline for notices to intervene. *See* the Procedural Schedule in the **SUPPLEMENTARY INFORMATION** section for other dates of interest.

ADDRESSES: Submit comments electronically by accessing the ''Filing Online'' link in the banner at the top of the Commission's Web site (*http://www.prc.gov*) or by directly accessing the Commission's Filing Online system at *https://www.prc.gov/prc-pages/filing-online/login.aspx.* Commenters who cannot submit their views electronically should contact the person identified in the **FOR FURTHER INFORMATION CONTACT** section as the source for case-related information for advice on alternatives to electronic filing.

FOR FURTHER INFORMATION CONTACT: Stephen L. Sharfman, General Counsel, at (202) 789–6820 (case-related information) or *DocketAdmins@prc.gov* (electronic filing assistance).

SUPPLEMENTARY INFORMATION: Notice is hereby given that, pursuant to 39 U.S.C. 404(d), on October 27, 2011, the Commission received a petition for review of the Postal Service's determination to close the Amoret post office in Amoret, Missouri. The petition for review was filed by Mildred Bell and the Concerned Citizens of Amoret (Petitioners) and is postmarked October 14, 2011. The Commission hereby institutes a proceeding under 39 U.S.C. 404(d)(5) and establishes Docket No. A2012–42 to consider Petitioners' appeal. If Petitioners would like to further explain their position with supplemental information or facts, Petitioners may either file a Participant Statement on PRC Form 61 or file a brief with the Commission no later than December 1, 2011.

Categories of issues apparently raised. Petitioners contend failure of the Postal Service to follow procedures required by law regarding the closures (*see* 39 U.S.C. 404(d)(5)(B)).

After the Postal Service files the administrative record and the Commission reviews it, the Commission may find that there are more legal issues than those set forth above, or that the Postal Service's determination disposes of one or more of those issues. The deadline for the Postal Service to file the applicable administrative record with the Commission is November 14, 2011. *See* 39 CFR 3001.113. In addition, the due date for any responsive pleading by the Postal Service to this notice is November 14, 2011.

Availability; Web site posting. The Commission has posted the appeal and supporting material on its Web site at *http://www.prc.gov*. Additional filings in this case and participant's submissions also will be posted on the Web site, if provided in electronic format or amenable to conversion, and not subject to a valid protective order. Information on how to use the Commission's Web site is available online or by contacting the Commission's webmaster via telephone at (202) 789–6873 or via electronic mail at *prc-webmaster@prc.gov.*

The appeal and all related documents are also available for public inspection in the Commission's docket section. Docket section hours are 8 a.m. to 4:30 p.m., Eastern Time, Monday through Friday, except on Federal government holidays. Docket section personnel may be contacted via electronic mail at *prc-dockets@prc.gov* or via telephone at (202) 789–6846.

Filing of documents. All filings of documents in this case shall be made using the Internet (Filing Online) pursuant to Commission rules 9(a) and 10(a) at the Commission's Web site, *http://www.prc.gov,* unless a waiver is obtained. *See* 39 CFR 3001.9(a) and 3001.10(a). Instructions for obtaining an account to file documents online may be found on the Commission's Web site, *http://www.prc.gov,* or by contacting the Commission's docket section at *prc-dockets@prc.gov* or via telephone at (202) 789–6846.

Commission reserves the right to redact personal information which may infringe on an individual's privacy rights from documents filed in this proceeding.

Intervention. Persons, other than the Petitioners and respondents, wishing to be heard in this matter are directed to file a notice of intervention. *See* 39 CFR 3001.111(b). Notices of intervention in this case are to be filed on or before November 29, 2011. A notice of intervention shall be filed using the Internet (Filing Online) at the Commission's Web site, *http://www.prc.gov,* unless a waiver is obtained for hardcopy filing. *See* 39 CFR 3001.9(a) and 3001.10(a).

Further procedures. By statute, the Commission is required to issue its decision within 120 days from the date it receives the appeal. *See* 39 U.S.C. 404(d)(5). A procedural schedule has been developed to accommodate this statutory deadline. In the interest of expedition, in light of the 120-day decision schedule, the Commission may request the Postal Service or other participants to submit information or memoranda of law on any appropriate issue. As required by Commission rules, if any motions are filed, responses are due 7 days after any such motion is filed. *See* 39 CFR 3001.21.

It is ordered:

1. The Postal Service shall file the applicable administrative record regarding this appeal no later than November 14, 2011.

2. Any responsive pleading by the Postal Service to this notice is due no later than November 14, 2011.

3. The procedural schedule listed below is hereby adopted.

4. Pursuant to 39 U.S.C. 505, James Waclawski is designated officer of the Commission (Public Representative) to represent the interests of the general public.

5. The Secretary shall arrange for publication of this notice and order and Procedural Schedule in the **Federal Register.**

By the Commission.

Shoshana M. Grove,

Secretary.

PROCEDURAL SCHEDULE

October 27, 2011	Filing of Appeal.
November 14, 2011	Deadline for the Postal Service to file the applicable administrative record in this appeal.
November 14, 2011	Deadline for the Postal Service to file any responsive pleading.
November 29, 2011	Deadline for notices to intervene (*see* 39 CFR 3001.111(b)).
December 1, 2011	Deadline for Petitioners' Form 61 or initial brief in support of petition (*see* 39 CFR 3001.115(a) and (b)).
December 21, 2011	Deadline for answering brief in support of the Postal Service (*see* 39 CFR 3001.115(c)).
January 5, 2011	Deadline for reply briefs in response to answering briefs (*see* 39 CFR 3001.115(d)).
January 12, 2011	Deadline for motions by any party requesting oral argument; the Commission will schedule oral argument only when it is a necessary addition to the written filings (*see* 39 CFR 3001.116).
February 13, 2012	Expiration of the Commission's 120-day decisional schedule (*see* 39 U.S.C. 404(d)(5)).

[FR Doc. 2011–29127 Filed 11–9–11; 8:45 am]

BILLING CODE 7710–FW–P

POSTAL REGULATORY COMMISSION

[Docket No. A2012–38; Order No. 944]

Post Office Closing

AGENCY: Postal Regulatory Commission.

ACTION: Notice.

SUMMARY: This document informs the public that an appeal of the closing of the New Boston, Illinois post office has been filed. It identifies preliminary steps and provides a procedural schedule. Publication of this document will allow the Postal Service, petitioners, and others to take appropriate action.

DATES: November 11, 2011: Administrative record due (from Postal Service); November 28, 2011, 4:30 p.m., Eastern Time: Deadline for notices to intervene. *See* the Procedural Schedule in the **SUPPLEMENTARY INFORMATION** section for other dates of interest.

ADDRESSES: Submit comments electronically by accessing the ''Filing Online'' link in the banner at the top of the Commission's Web site (*http://www.prc.gov*) or by directly accessing the Commission's Filing Online system at *https://www.prc.gov/prc-pages/filing-online/login.aspx.* Commenters who cannot submit their views electronically should contact the person identified in the **FOR FURTHER INFORMATION CONTACT** section as the source for case-related information for advice on alternatives to electronic filing.

FOR FURTHER INFORMATION CONTACT: Stephen L. Sharfman, General Counsel, at (202) 789–6820 (case-related information) or *DocketAdmins@prc.gov* (electronic filing assistance).

SUPPLEMENTARY INFORMATION: Notice is hereby given that, pursuant to 39 U.S.C. 404(d), on October 27, 2011, the Commission received two petitions for review of the Postal Service's determination to close the New Boston post office in New Boston, Illinois. The first petition for review was filed by Barbara O'Hearn. The second petition for review was filed by Lu Ann Krengle. The earliest postmark date is October 17, 2011. The Commission hereby institutes a proceeding under 39 U.S.C. 404(d)(5) and establishes Docket No. A2012–38 to consider Petitioners' appeal. If Petitioners would like to further explain their position with supplemental information or facts, Petitioners may either file a Participant Statement on PRC Form 61 or file a brief with the Commission no later than December 1, 2011.

Categories of issues apparently raised. Petitioners contend that (1) The Postal Service failed to consider the effect of the closing on the community (*see* 39 U.S.C. 404(d)(2)(A)(i)); and (2) the Postal Service failed to consider whether or not it will continue to provide a maximum degree of effective and regular postal services to the community (*see* 39 U.S.C. 404(d)(2)(A)(iii)).

After the Postal Service files the administrative record and the Commission reviews it, the Commission may find that there are more legal issues than those set forth above, or that the Postal Service's determination disposes of one or more of those issues. The deadline for the Postal Service to file the applicable administrative record with the Commission is November 11, 2011. *See* 39 CFR 3001.113. In addition, the due date for any responsive pleading by the Postal Service to this notice is November 11, 2011.

Availability; Web site posting. The Commission has posted the appeal and supporting material on its Web site at *http://www.prc.gov.* Additional filings in this case and participant's

submissions also will be posted on the Web site, if provided in electronic format or amenable to conversion, and not subject to a valid protective order. Information on how to use the Commission's Web site is available online or by contacting the Commission's webmaster via telephone at (202) 789–6873 or via electronic mail at *prc-webmaster@prc.gov.*

The appeal and all related documents are also available for public inspection in the Commission's docket section. Docket section hours are 8 a.m. to 4:30 p.m., Eastern Time, Monday through Friday, except on Federal government holidays. Docket section personnel may be contacted via electronic mail at *prc-dockets@prc.gov* or via telephone at (202) 789–6846.

Filing of documents. All filings of documents in this case shall be made using the Internet (Filing Online) pursuant to Commission rules 9(a) and 10(a) at the Commission's Web site, *http://www.prc.gov,* unless a waiver is obtained. *See* 39 CFR 3001.9(a) and 3001.10(a). Instructions for obtaining an account to file documents online may be found on the Commission's Web site, *http://www.prc.gov,* or by contacting the Commission's docket section at *prc-dockets@prc.gov* or via telephone at (202) 789–6846.

Commission reserves the right to redact personal information which may infringe on an individual's privacy rights from documents filed in this proceeding.

Intervention. Persons, other than the Petitioners and respondents, wishing to be heard in this matter are directed to file a notice of intervention. *See* 39 CFR 3001.111(b). Notices of intervention in this case are to be filed on or before November 28, 2011. A notice of intervention shall be filed using the Internet (Filing Online) at the Commission's Web site, *http://www.prc.gov,* unless a waiver is obtained for hardcopy filing. *See* 39 CFR 3001.9(a) and 3001.10(a).

Further procedures. By statute, the Commission is required to issue its decision within 120 days from the date it receives the appeal. *See* 39 U.S.C. 404(d)(5). A procedural schedule has been developed to accommodate this statutory deadline. In the interest of expedition, in light of the 120-day decision schedule, the Commission may request the Postal Service or other participants to submit information or memoranda of law on any appropriate issue. As required by Commission rules, if any motions are filed, responses are due 7 days after any such motion is filed. *See* 39 CFR 3001.21.

It is ordered:

1. The Postal Service shall file the applicable administrative record regarding this appeal no later than November 11, 2011.

2. Any responsive pleading by the Postal Service to this notice is due no later than November 11, 2011.

3. The procedural schedule listed below is hereby adopted.

4. Pursuant to 39 U.S.C. 505, Tracy Ferguson is designated officer of the Commission (Public Representative) to represent the interests of the general public.

5. The Secretary shall arrange for publication of this notice and order and Procedural Schedule in the **Federal Register**.

By the Commission.

Shoshana M. Grove,

Secretary.

PROCEDURAL SCHEDULE

October 27, 2011	Filing of Appeal.
November 11, 2011	Deadline for the Postal Service to file the applicable administrative record in this appeal.
November 11, 2011	Deadline for the Postal Service to file any responsive pleading.
November 28, 2011	Deadline for notices to intervene (*see* 39 CFR 3001.111(b)).
December 1, 2011	Deadline for Petitioners' Form 61 or initial brief in support of petition (*see* 39 CFR 3001.115(a) and (b)).
December 21, 2011	Deadline for answering brief in support of the Postal Service (*see* 39 CFR 3001.115(c)).
January 5, 2011	Deadline for reply briefs in response to answering briefs (*see* 39 CFR 3001.115(d)).
January 12, 2011	Deadline for motions by any party requesting oral argument; the Commission will schedule oral argument only when it is a necessary addition to the written filings (*see* 39 CFR 3001.116).
February 14, 2012	Expiration of the Commission's 120-day decisional schedule (*see* 39 U.S.C. 404(d)(5)).

[FR Doc. 2011–29135 Filed 11–9–11; 8:45 am]

BILLING CODE 7710–FW–P

OFFICE OF SCIENCE AND TECHNOLOGY POLICY

Request For Information: Public Access to Digital Data Resulting from Federally Funded Scientific Research; Correction

ACTION: Notice of Request for Information (RFI).

SUMMARY: The RFI is being corrected to change the response date to January 2, 2012 to reflect a 60 day response time. The RFI was published in the **Federal Register**, Volume 76, Number 214, on November 4, 2011, pages 68517–68518.

In accordance with Section 103(b)(6) of the America COMPETES Reauthorization Act of 2010 (ACRA; Pub. L. 111–358), this Request for Information (RFI) offers the opportunity for interested individuals and organizations to provide recommendations on approaches for ensuring long-term stewardship and encouraging broad public access to unclassified digital data that result from federally funded scientific research. The public input provided through this Notice will inform deliberations of the National Science and Technology Council's Interagency Working Group on Digital Data.

Release Date: November 3, 2011.

Response Date: January 2, 2012.

ADDRESSES: *digitaldata@ostp.gov.*

Issued By: Office of Science and Technology Policy (OSTP) on behalf of the National Science and Technology Council (NSTC).

SUPPLEMENTARY INFORMATION:

Purpose

In accordance with Section 103(b)(6) of the America COMPETES Reauthorization Act of 2010 (ACRA; Pub. L. 111–358), this Request for Information (RFI) offers the opportunity for interested individuals and organizations to provide recommendations on approaches for ensuring long-term stewardship and encouraging broad public access to unclassified digital data that result from federally funded scientific research. The public input provided through this Notice will inform deliberations of the National Science and Technology

Council's Interagency Working Group on Digital Data.

Background

The multi-agency Interagency Working Group on Digital Data (Working Group), established under the National Science and Technology Council (NSTC) Committee on Science (CoS), has been tasked with developing options for implementing the digital data policy and standards requirements of Section 103 of ACRA. OSTP will issue a report to Congress, in accordance with Section 103(e) of ACRA, describing priorities for the development of agency policies for ensuring broad public access to the results of federally funded unclassified research, the status of agency policies for public access to digital data resulting from federally funded research, and a summary of public input collected from this RFI and other mechanisms. The Working Group is considering steps that can be taken by Federal agencies to encourage and coordinate the development of agency policies and standards to promote long-term preservation of and access to digital data resulting from federally funded scientific research. Ideally, such policies would harmonize, to the extent practicable and feasible, data management plans for digital data that are collected or otherwise produced either by the agency itself or extramurally with Federal funds. The 2009 report of the Interagency Working Group on Digital Data of the National Science and Technology Council, ''Harnessing the Power of Digital Data,'' recommended that agencies lay the foundations for digital scientific data policy and make their policies publicly available. It also recommended that agencies consider requiring data management plans for projects that will generate ''preservation data''—those data for which the benefits of preservation exceed the costs. Federal science agencies already have some experience with policies to promote long-term preservation and access to scientific data. Indeed current Federal policies promote and in many cases require Federal agencies to make the digital data generated by Federal agencies more publically accessible. However, such policies do not routinely cover data generated through Federal grants, cooperative agreements, and some other types of funding mechanism. Exceptions include, the National Institutes of Health's (NIH) Data Sharing Policy, which requires all investigator-initiated applications with direct costs greater than $500,000 in any single year provide a data management plan. In addition, NIH has more specific data management and data sharing requirements for specific types of projects, such as genome-wide association studies.

In January 2011, the National Science Foundation (NSF) reaffirmed its data management policy requirement, indicating that proposals must include a Data Management Plan that describes how funded researchers will conform to NSF policy on the dissemination and sharing of research results. The NSF policy is clear that ''Investigators are expected to share with other researchers, at no more than incremental cost and within a reasonable time, the primary data, samples, physical collections and other supporting materials created or gathered in the course of work under NSF grants.'' Such models may not necessarily be appropriate for all types of federally sponsored research.

As agencies consider how to further develop digital data policies, it is important to note that all policies for increasing accountability and access to digital data must follow statutory requirements and follow best practices for protecting confidentiality, personal privacy, proprietary interests, intellectual property rights, author attribution, and for ensuring that homeland and national security interests are not compromised. The Working Group is now seeking additional insight from ''non-Federal stakeholders, including the public, universities, nonprofit and for-profit publishers, libraries, federally funded and non-federally funded research scientists, and other organizations and institutions with an interest in long-term stewardship and improved public access to the results of federally funded research,'' as described in Section 103(b)(6) of ACRA. Specifically the Working Group seeks further public comment on the questions listed below:

Preservation, Discoverability, and Access

(1) What specific Federal policies would encourage public access to and the preservation of broadly valuable digital data resulting from federally funded scientific research, to grow the U.S. economy and improve the productivity of the American scientific enterprise?

(2) What specific steps can be taken to protect the intellectual property interests of publishers, scientists, Federal agencies, and other stakeholders, with respect to any existing or proposed policies for encouraging public access to and preservation of digital data resulting from federally funded scientific research?

(3) How could Federal agencies take into account inherent differences between scientific disciplines and different types of digital data when developing policies on the management of data?

(4) How could agency policies consider differences in the relative costs and benefits of long-term stewardship and dissemination of different types of data resulting from federally funded research?

(5) How can stakeholders (*e.g.,* research communities, universities, research institutions, libraries, scientific publishers) best contribute to the implementation of data management plans?

(6) How could funding mechanisms be improved to better address the real costs of preserving and making digital data accessible?

(7) What approaches could agencies take to measure, verify, and improve compliance with Federal data stewardship and access policies for scientific research? How can the burden of compliance and verification be minimized?

(8) What additional steps could agencies take to stimulate innovative use of publicly accessible research data in new and existing markets and industries to create jobs and grow the economy?

(9) What mechanisms could be developed to assure that those who produced the data are given appropriate attribution and credit when secondary results are reported?

Standards for Interoperability, Reuse and Repurposing

(10) What digital data standards would enable interoperability, reuse, and repurposing of digital scientific data? For example, MIAME (minimum information about a microarray experiment; see Brazma *et al.,* 2001, Nature Genetics 29, 371) is an example of a community-driven data standards effort.

(11) What are other examples of standards development processes that were successful in producing effective standards and what characteristics of the process made these efforts successful?

(12) How could Federal agencies promote effective coordination on digital data standards with other nations and international communities?

(13) What policies, practices, and standards are needed to support linking between publications and associated data?

Response to this RFI is voluntary. Responders are free to address any or all the above items, as well as provide additional information that they think is relevant to developing policies consistent with increased preservation and dissemination of broadly useful digital data resulting from federally funded research. Please note that the Government will not pay for response preparation or for the use of any information contained in the response.

How To Submit a Response

All comments must be submitted electronically to: *digitaldata@ostp.gov.*

Responses to this RFI will be accepted through January 2, 2012. You will receive an electronic confirmation acknowledging receipt of your response, but will not receive individualized feedback on any suggestions. No basis for claims against the U.S. Government shall arise as a result of a response to this request for information or from the Government's use of such information.

Inquiries

Specific questions about this RFI should be directed to the following email address: *digitaldata@ostp.gov*.

Form should include:

[Assigned ID #]
[Assigned Entry date]
Name/Email
Affiliation/Organization
City, State
Comment 1
Comment 2
Comment 3
Comment 4
Comment 5
Comment 6
Comment 7
Comment 8
Comment 9
Comment 10
Comment 11

In addition, please identify any other items the Working Group might consider for Federal policies related to public access to peer-reviewed scholarly publications resulting from federally supported research.

Please attach any documents that support your comments to the questions.

Ted Wackler,

Deputy Chief of Staff.

[FR Doc. 2011–29166 Filed 11–9–11; 8:45 am]

BILLING CODE P

SECURITIES AND EXCHANGE COMMISSION

[Release No. 3306; File No.: 801–35969]

Investment Advisers Act of 1940; In the Matter of Creative Investment Research, Inc., 1050 17th Street NW., Suite 1000, Washington, DC 20036; Notice of Intention to Cancel Registration Pursuant to Section 203(h) of the Investment Advisers Act of 1940

October 24, 2011.

Correction

In notice document 2011–27900, appearing on pages 67005–67006 in the issue of October 28, 2011, make the following correction:

On page 67005, in the second column, the subject heading should read as set forth above.

[FR Doc. C1–2011–27900 Filed 11–9–11; 8:45 am]

BILLING CODE 1505–01–D

SECURITIES AND EXCHANGE COMMISSION

[Release No. 34–65678; File No. SR–ISE–2011–67]

Self-Regulatory Organizations; International Securities Exchange, LLC; Notice of Filing and Immediate Effectiveness of Proposed Rule Change Relating to Market Data Fees

November 3, 2011.

Pursuant to Section 19(b)(1) of the Securities Exchange Act of 1934 (''Exchange Act'') [1] and Rule 19b–4 thereunder,[2] notice is hereby given that, on October 24, 2011, the International Securities Exchange, LLC (the ''Exchange'' or the ''ISE'') filed with the Securities and Exchange Commission (the ''Commission'') the proposed rule change as described in Items I, II, and III below, which Items have been prepared by the Exchange. The Commission is publishing this notice to solicit comments on the proposed rule change from interested persons.

I. Self-Regulatory Organization's Statement of the Terms of Substance of the Proposed Rule Change

The Exchange proposes to amend its Schedule of Fees to adopt subscription fees for the sale of a market data offering called the ISE Implied Volatility and Greeks Feed. The text of the proposed rule change is available on the Exchange's Web site *http://www.ise.com,* at the principal office of the Exchange, and at the Commission's Public Reference Room.

II. Self-Regulatory Organization's Statement of the Purpose of, and Statutory Basis for, the Proposed Rule Change

In its filing with the Commission, the Exchange included statements concerning the purpose of, and basis for, the proposed rule change and discussed any comments it received on the proposed rule change. The text of these statements may be examined at the places specified in Item IV below. The self-regulatory organization has prepared summaries, set forth in Sections A, B and C below, of the most significant aspects of such statements.

A. Self-Regulatory Organization's Statement of the Purpose of, and Statutory Basis for, the Proposed Rule Change

1. Purpose

ISE proposes to amend its Schedule of Fees to adopt subscription fees for the sale of the ISE Implied Volatility and Greeks Feed. The Exchange previously submitted a proposed rule change to establish this data feed.[3]

ISE Implied Volatility and Greeks Feed

The ISE Implied Volatility and Greeks Feed delivers real-time implied volatilities and risk parameters for equity, index and ETF options. This information is used to track an option's price relative to changes in volatility and the underlying security's price, which affects the theoretical price of an option. The risk parameters are useful for delta neutral option execution and monitoring an option's time premium decay. The ISE Implied Volatility and Greeks Feed is also useful for investing and hedging strategies such as placing orders based on changes in levels of volatility. The ISE Implied Volatility and Greeks Feed includes real-time implied volatilities for the bid, ask and mid-point price as well as delta, gamma, vega, theta and rho for each option series. The ISE Implied Volatility and Greeks Feed is a low latency feed that produces data for the entire universe of U.S. options disseminated by the Options Price Reporting Authority (OPRA). The Exchange believes the ISE Implied Volatility and Greeks Feed provides valuable information that can help users make informed investment decisions.

[1] 15 U.S.C. 78s(b)(1).

[2] 17 CFR 240.19b–4.

[3] *See* Exchange Act Release No. 65295 (September 8, 2011), 76 FR 56832 (September 14, 2011) (SR–ISE–2011–55).

Proposed Fees for ISE Implied Volatility and Greeks Feed

The Exchange proposes to make the ISE Implied Volatility and Greeks Feed available to both members and non-members on a subscription basis, as follows:

• $5,000 per month per Business Unit [4] for Subscribers [5] who are Professionals, and $50 per controlled device [6] per month after the first 50 controlled devices. This subscription level is for internal use only and includes the first 50 controlled devices.

In addition, the Exchange is proposing to create a new data distribution model, called the Managed Data Access Service [7] to further the distribution of the ISE Implied Volatility and Greeks Feed.[8] Under this distribution model, Managed Data Access Distributors [9] are required to monitor the delivery of the data in the Managed Data Access Service to their clients, the Managed Data Access Recipients.[10] This new pricing and administrative option is in response to industry demand, as well as due to changes in the technology used to distribute market data.

Managed Data Access Service provides an alternative delivery option for the ISE Implied Volatility and Greeks Feed. The Managed Data Access Distributor must agree to reformat, redisplay and/or alter the ISE Implied Volatility and Greeks Feed prior to retransmission, but not to affect the integrity of the ISE Implied Volatility and Greeks Feed and not to render it inaccurate, unfair, uninformative, fictitious, misleading, or discriminatory.

The Exchange will maintain contracts with Managed Data Access Recipients, who may use the information in the ISE Implied Volatility and Greeks Feed for internal purposes only and may be liable for any unauthorized use under the Managed Data Access Service.

In the past, the Exchange has considered this type of distribution to be an uncontrolled data product if the Managed Data Access Distributor does not control both the entitlements and the display of the information. Over the last several years, Managed Data Access Distributors have improved the technical delivery and monitoring capabilities of data therefore Managed Data Access Service is a response to an industry need to administer new types of technical deliveries.

Proposed Fees for ISE Implied Volatility and Greeks Feed as a Managed Data Access Service

The Exchange proposes to charge for Managed Data Access Service for the ISE Implied Volatility and Greeks Feed, as follows:

• $1,500 per month for Managed Data Access Distributors who distribute the data feed externally through a controlled device to Non-Professional recipients, and $1 per controlled device per month.

• $1,500 per month for Managed Data Access Distributors who distribute the data feed externally through a controlled device to Professional recipients, and $50 per controlled device per month.

• $1,500 per month for Managed Data Access Distributors who distribute the data feed internally from an Application Programming Interface (API) to Professional recipients, and a monthly fee based on the number of unique option symbols received by the recipient, as follows:

• $1,000 per month for up to 10,000 unique option symbols.

• $2,000 per month for up to 25,000 unique option symbols.

• $3,000 per month for up to 50,000 unique option symbols.

• $4,000 per month for up to 100,000 unique option symbols.

• $5,000 per month for an unlimited number of unique option symbols.

• $250 per month API log-in fee for Managed Data Access Recipients. This fee is only applicable to recipients who utilize an API to receive the ISE Implied Volatility & Greeks Feed from a Managed Data Access Distributor.

2. Statutory Basis

The basis under the Securities Exchange Act of 1934 (the ''Act'') for this proposed rule change is the requirement under Section 6(b)(4) that an exchange have an equitable allocation of reasonable dues, fees and other charges among its members and other persons using its facilities. The Exchange believes that the proposed rule change is consistent with the provisions of Section 6 of the Act,[11] in general, and with Sections 6(b)(4) of the Act,[12] in particular, in that it provides for the equitable allocation of reasonable dues, fees and other charges among members and issuers and other persons using any facility or system which ISE operates or controls.

The Exchange believes that the proposed rule change is also consistent with Section 6(b)(8) of the Act [13] in that it does not impose any burden on competition not necessary or appropriate in furtherance of the purposes of the Act. The fees charged would be the same for all market participants, and therefore do not unreasonably discriminate among market participants.

In adopting Regulation NMS, the Commission granted self-regulatory organizations and broker-dealers increased authority and flexibility of offer new and unique market data to the public. It was believed that this authority would expand the amount of data available to consumers, and also spur innovation and competition for the provision of market data.

The Commission concluded that Regulation NMS—by deregulating the market in proprietary data—would itself further the Act's goals of facilitating efficiency and competition:

[E]fficiency is promoted when broker-dealers who do not need the data beyond the prices, sizes, market center identifications of the NBBO and consolidated last sale information are not required to receive (and pay for) such data. The Commission also believes that efficiency is promoted when broker-dealers may choose to receive (and

[4] A ''Business Unit'' is a separate and distinct business group at a Subscriber firm that has access to the ISE Implied Volatility and Greeks Feed. A market making desk, a risk management group, etc. would each be considered a Business Unit.

[5] A ''Subscriber'' is any firm that receives the ISE Implied Volatility and Greeks Feed directly from the ISE or indirectly through a redistributor and then distributes it either internally or externally. A redistributor includes market data vendors and connectivity providers such as extranet and private network providers.

[6] A ''controlled device'' is any device that a Subscriber or Managed Data Access Distributor of the ISE Implied Volatility and Greeks Feed permits to access the information in the ISE Implied Volatility and Greeks Feed.

[7] ''Managed Data Access Service'' is any retransmission data product containing the ISE Implied Volatility and Greeks Feed offered by a Managed Data Access Distributor, as defined below, where the Managed Data Access Distributor manages and monitors, but does not necessarily control, the information.

[8] The Exchange notes that a managed data solution is not a novel distribution model. At least one other exchange currently offers a managed data solution to distribute its proprietary market data. *See* Exchange Act Release No. 34–63276 (November 8, 2010), 75 FR 69717 (November 15, 2010) (SR–NASDAQ–2010–138).

[9] A ''Managed Data Access Distributor'' is a subscriber of the ISE Implied Volatility and Greeks Feed that permits access to the information in the ISE Implied Volatility and Greeks Feed through a ''controlled device.'' A Managed Data Access Distributor can also offer a data feed solution, including an Application Programming Interface (API) or similar automated delivery solutions, with only limited entitlement controls (*e.g.,* usernames and/or passwords) to a recipient of the information.

[10] A ''Managed Data Access Recipient'' is a subscriber to the Managed Data Access Service for the purpose of accessing the ISE Implied Volatility and Greeks Feed offered by a Managed Data Access Distributor.

[11] 15 U.S.C. 78f.

[12] 15 U.S.C. 78f(b)(4).

[13] 15 U.S.C. 78f(b)(8).

pay for) additional market data based on their own internal analysis of the need for such data.[14]

By removing ''unnecessary regulatory restrictions'' on the ability of exchanges to sell their own data, Regulation NMS advanced the goals of the Act and the principles reflected in its legislative history. If the free market should determine whether proprietary data is sold to broker-dealers at all, it follows that the price at which such data is sold should be set by the market as well.

On July 21, 2010, President Barak [sic] Obama signed into law H.R. 4173, the Dodd-Frank Wall Street Reform and Consumer Protection Act of 2010 (''Dodd-Frank Act''), which amended Section 19 of the Act. Among other things, Section 916 of the Dodd-Frank Act amended paragraph (A) of Section 19(b)(3) of the Act by inserting the phrase ''on any person, whether or not the person is a member of the self-regulatory organization'' after ''due, fee or other charge imposed by the self-regulatory organization.'' As a result, all SRO rule proposals establishing or changing dues, fees, or other charges are immediately effective upon filing regardless of whether such dues, fees, or other charges are imposed on members of the SRO, non-members, or both. Section 916 further amended paragraph (C) of Section 19(b)(3) of the Act to read, in pertinent part, ''At any time within the 60-day period beginning on the date of filing of such a proposed rule change in accordance with the provisions of paragraph (1) [of Section 19(b)], the Commission summarily may temporarily suspend the change in the rules of the self-regulatory organization made thereby, if it appears to the Commission that such action is necessary or appropriate in the public interest, for the protection of investors, or otherwise in furtherance of the purposes of this title. If the Commission takes such action, the Commission shall institute proceedings under paragraph (2)(B) [of Section 19(b)] to determine whether the proposed rule should be approved or disapproved.''

ISE believes that these amendments to Section 19 of the Act reflect Congress's intent to allow the Commission to rely upon the forces of competition to ensure that fees for market data are reasonable and equitably allocated. Although Section 19(b) had formerly authorized immediate effectiveness for a ''due, fee or other charge imposed by the self-regulatory organization,'' the Commission adopted a policy and subsequently a rule stipulating that fees for data and other products available to persons that are not members of the self-regulatory organization must be approved by the Commission after first being published for comment. At the time, the Commission supported the adoption of the policy and the rule by pointing out that unlike members, whose representation in self-regulatory organization governance was mandated by the Act, non-members should be given the opportunity to comment on fees before being required to pay them, and that the Commission should specifically approve all such fees. ISE believes that the amendment to Section 19 reflects Congress's conclusion that the evolution of self-regulatory organization governance and competitive market structure have rendered the Commission's prior policy on non-member fees obsolete. Specifically, many exchanges have evolved from member-owned not-for-profit corporations into for-profit investor-owned corporations (or subsidiaries of investor-owned corporations). Accordingly, exchanges no longer have narrow incentives to manage their affairs for the exclusive benefit of their members, but rather have incentives to maximize the appeal of their products to all customers, whether members or nonmembers, so as to broaden distribution and grow revenues. Moreover, we believe that the change also reflects an endorsement of the Commission's determinations that reliance on competitive markets is an appropriate means to ensure equitable and reasonable prices. Simply put, the change reflects a presumption that all fee changes should be permitted to take effect immediately, since the level of all fees are constrained by competitive forces.

The recent decision of the United States Court of Appeals for the District of Columbia Circuit in *NetCoaliton* [sic] v. *SEC,* No. 09–1042 (D.C. Cir. 2010), although reviewing a Commission decision made prior to the effective date of the Dodd-Frank Act, upheld the Commission's reliance upon competitive markets to set reasonable and equitably allocated fees for market data. ''In fact, the legislative history indicates that the Congress intended that the market system 'evolve through the interplay of competitive forces as unnecessary regulatory restrictions are removed' and that the SEC wield its regulatory power 'in those situations where competition may not be sufficient,' such as in the creation of a 'consolidated transactional reporting system.'''[15]

The court's conclusions about Congressional intent are therefore reinforced by the Dodd-Frank Act amendments, which create a presumption that exchange fees, including market data fees, may take effect immediately, without prior Commission approval, and that the Commission should take action to suspend a fee change and institute a proceeding to determine whether the fee change should be approved or disapproved only where the Commission has concerns that the change may not be consistent with the Act.

The Exchange believes that the proposed market data fees are consistent with the requirements of the Act because competition provides an effective constraint on the market data fees that the Exchange has the ability and the incentive to charge. ISE has a compelling need to attract order flow from market participants in order to maintain its share of trading volume. This compelling need to attract order flow imposes significant pressure on ISE to act reasonably in setting the fees for its market data offerings, particularly given that the market participants that will pay such fees often will be the same market participants from whom ISE must attract order flow. These market participants include broker-dealers that control the handling of a large volume of customer and proprietary order flow. Given the portability of order flow from one exchange to another, any exchange that sought to charge unreasonably high market data fees would risk alienating many of the same customers on whose orders it depends for competitive survival. ISE currently competes with eight options exchanges for order flow.[16]

ISE is constrained in pricing the ISE Implied Volatility and Greeks Feed by the availability to market participants of alternatives to purchasing ISE products. ISE must consider the extent to which market participants would choose one or more alternatives instead of purchasing the Exchange's data.

For the reasons cited above, the Exchange believes that the proposed fees for the ISE Implied Volatility and

[14] *See* Securities Exchange Act Release No. 51808 (June 9, 2005), 70 FR 37496 (June 29, 2005).

[15] *NetCoaltion* [sic], at 15 (quoting H.R. Rep. No. 94–229, at 92 (1975), *as reprinted in* 1975 U.S.C.C.A.N. 321, 323).

[16] The Commission has previously made a finding that the options industry is subject to significant competitive forces. *See* Securities Exchange Act Release No. 59949 (May 20, 2009), 74 FR 25593 (May 28, 2009) (SR–ISE–2009–97) (order approving ISE's proposal to establish fees for a real-time depth of market offering).

Greeks Feed are equitable, fair, reasonable and not unreasonably discriminatory. The Exchange further believes that the continued availability of the ISE Implied Volatility and Greeks Feed enhances transparency, fosters competition among orders and markets, and enables buyers and sellers to obtain better prices. In addition, the Exchange believes that no substantial countervailing basis exists to support a finding that the proposed terms and fees for this product fails to meet the requirements of the Act.

B. Self-Regulatory Organization's Statement on Burden on Competition

ISE does not believe that the proposed rule change will result in any burden on competition that is not necessary or appropriate in furtherance of the purposes of the Act, as amended. Notwithstanding its determination that the Commission may rely upon competition to establish fair and equitably allocated fees for market data, the NetCoaltion [sic] court found that the Commission had not, in that case, compiled a record that adequately supported its conclusion that the market for the data at issue in the case was competitive.

For the reasons discussed above, ISE believes that the Dodd-Frank Act amendments to Section 19 materially alter the scope of the Commission's review of future market data filings, by creating a presumption that all fees may take effect immediately, without prior analysis by the Commission of the competitive environment. Even in the absence of this important statutory change, however, ISE believes that a record may readily be established to demonstrate the competitive nature of the market in question.

As recently noted by a number of exchanges,[17] there is intense competition between trading platforms that provide transaction execution and routing services and proprietary data products. Transaction execution and proprietary data products are complementary in that market data is both an input and a byproduct of the execution service. In fact, market data and trade execution are a paradigmatic example of joint products with joint costs. The decision whether and on which platform to post an order will depend on the attributes of the platform where the order can be posted, including the execution fees, data quality and price and distribution of its data products. Without the prospect of a taking order seeing and reacting to a posted order on a particular platform, the posting of the order would accomplish little. Without trade executions, exchange data products cannot exist. Data products are valuable to many end users only insofar as they provide information that end users expect will assist them or their customers in making trading decisions.

The costs of producing market data include not only the costs of the data distribution infrastructure, but also the costs of designing, maintaining, and operating the exchange's transaction execution platform and the cost of regulating the exchange to ensure its fair operation and maintain investor confidence. The total return that a trading platform earns reflects the revenues it receives from both products and the joint costs it incurs. Moreover, an exchange's customers view the costs of transaction executions and of data as a unified cost of doing business with the exchange. A broker-dealer will direct orders to a particular exchange only if the expected revenues from executing trades on the exchange exceed net transaction execution costs and the cost of data that the broker-dealer chooses to buy to support its trading decisions (or those of its customers). The choice of data products is, in turn, a product of the value of the products in making profitable trading decisions. If the cost of the product exceeds its expected value, the broker-dealer will choose not to buy it.

Moreover, as a broker-dealer chooses to direct fewer orders to a particular exchange, the value of the product to that broker-dealer decrease, for two reasons. First, the product will contain less information, because executions of the broker-dealer's orders will not be reflected in it. Second, and perhaps more important, the product will be less valuable to that broker-dealer because it does not provide information about the venue to which it is directing its orders. Data from the competing venue to which the broker-dealer is directing orders will become correspondingly more valuable. Thus, a super-competitive increase in the fees charged for either transactions or data has the potential to impair revenues from both products. ''No one disputes that competition for order flow is 'fierce'.'' [18] However, the existence of fierce competition for order flow implies a high degree of price sensitivity on the part of broker-dealers with order flow, since they may readily reduce costs by directing orders toward the lowest-cost trading venues. A broker-dealer that shifted its order flow from one platform to another in response to order execution price differentials would both reduce the value of that platform's market data and reduce its own need to consume data from the disfavored platform. Similarly, if a platform increases its market data fees, the change will affect the overall cost of doing business with the platform, and affected broker-dealers will assess whether they can lower their trading costs by directing orders elsewhere and thereby lessening the need for the more expensive data.

Analyzing the cost of market data distribution in isolation from the cost of all of the inputs supporting the creation of market data will inevitably underestimate the cost of the data. Thus, because it is impossible to create data without a fast, technologically robust, and well-regulated execution system, system costs and regulatory costs affect the price of market data. It would be equally misleading, however, to attribute all of the exchange's costs to the market data portion of an exchange's joint product. Rather, all of the exchange's costs are incurred for the unified purposes of attracting order flow, executing and/or routing orders, and generating and selling data about market activity. The total return that an exchange earns reflects the revenues it receives from the joint products and the total costs of the joint products.

Competition among trading platforms can be expected to constrain the aggregate return each platform earns from the sale of its joint products, but different platforms may choose from a range of possible, and equally reasonable, pricing strategies as the means of recovering total costs. For example, some platforms may choose to pay rebates to attract orders, charge relatively low prices for market information (or provide information free of charge) and charge relatively high prices for accessing posted liquidity. Other platforms may choose a strategy of paying lower rebates (or no rebates) to attract orders, setting relatively high prices for market information, and setting relatively low prices for accessing posted liquidity. In this environment, there is no economic basis for regulating maximum prices for one of the joint products in an industry in which suppliers face competitive constraints with regard to the joint offering.

[17] *See* Securities Exchange Act Release Nos. 63084 (October 13, 2010), 75 FR 64379 (October 19, 2010) (Notice of Filing and Immediate Effectiveness of Proposed Rule Change To Revise an Optional Depth Data Enterprise License Fee for Broker-Dealer Distribution of Depth-of-Book Data) (SR–NASDAQ–2010–125); and 62887 (September 10, 2010), 75 FR 57092 (September 17, 2010) (Notice of Filing and Immediate Effectiveness of Proposed Rule Change Relating to Market Data Feeds) (SR–PHLX–2010–121).

[18] *NetCoalition,* at 24.

The market for market data products is competitive and inherently contestable because there is fierce competition for the inputs necessary to the creation of proprietary data and strict pricing discipline for the proprietary products themselves. Numerous exchanges compete with each other for listings, trades, and market data itself, providing virtually limitless opportunities for entrepreneurs who wish to produce and distribute their own market data. This proprietary data is produced by each individual exchange, as well as other entities, in a vigorously competitive market.

Broker-dealers currently have numerous alternative venues for their order flow, including numerous self-regulatory organization (''SRO'') markets, as well as internalizing broker-dealers (''BDs'') and various forms of alternative trading systems (''ATSs''), including dark pools and electronic communication networks (''ECNs''). Each SRO market competes to produce transaction reports via trade executions, and two FINRA-regulated Trade Reporting Facilities (''TRFs'') compete to attract internalized transaction reports. Competitive markets for order flow, executions, and transaction reports provide pricing discipline for the inputs of proprietary data products. The large number of SROs, TRFs, BDs, and ATSs that currently produce proprietary data or are currently capable of producing it provides further pricing discipline for proprietary data products. Each SRO, TRF, ATS, and BD is currently permitted to produce proprietary data products, and many currently do or have announced plans to do so, including NASDAQ, NYSE, NYSE Amex, NYSEArca, and BATS.

Any ATS or BD can combine with any other ATS, BD, or multiple ATSs or BDs to produce joint proprietary data products. Additionally, order routers and market data vendors can facilitate single or multiple broker-dealers' production of proprietary data products. The potential sources of proprietary products are virtually limitless. The fact that proprietary data from ATSs, BDs, and vendors can by-pass SROs is significant in two respects. First, non-SROs can compete directly with SROs for the production and sale of proprietary data products, as BATS and Arca did before registering as exchanges by publishing proprietary book data on the Internet. Second, because a single order or transaction report can appear in an SRO proprietary product, a non-SRO proprietary product, or both, the data available in proprietary products is exponentially greater than the actual number of orders and transaction reports that exist in the marketplace. Market data vendors provide another form of price discipline for proprietary data products because they control the primary means of access to end users. Vendors impose price restraints based upon their business models. For example, vendors such as Bloomberg and Reuters that assess a surcharge on data they sell may refuse to offer proprietary products that end users will not purchase in sufficient numbers. Internet portals, such as Google, impose a discipline by providing only data that will enable them to attract ''eyeballs'' that contribute to their advertising revenue. Retail broker-dealers, such as Schwab and Fidelity, offer their customers proprietary data only if it promotes trading and generates sufficient commission revenue. Although the business models may differ, these vendors' pricing discipline is the same: they can simply refuse to purchase any proprietary data product that fails to provide sufficient value. NASDAQ and other producers of proprietary data products must understand and respond to these varying business models and pricing disciplines in order to market proprietary data products successfully.

Competition among platforms has driven ISE continually to improve its platform data offerings and to cater to customers' data needs. For example, ISE has developed and maintained multiple delivery mechanisms that enable customers to receive data in the form and manner they prefer and at the lowest cost to them. ISE offers front end applications such as its PrecISE Trade application which helps customers utilize data. ISE offers data via multiple extranet providers, thereby helping to reduce network and total cost for its data products. Despite these enhancements and a dramatic increase in message traffic, ISE's fees for market data have, for the most part, remained flat.

The vigor of competition for market data is significant and the Exchange believes that this proposal clearly evidences such competition. ISE is offering a new pricing model in order to keep pace with changes in the industry and evolving customer needs.

C. Self-Regulatory Organization's Statement on Comments on the Proposed Rule Change Received From Members, Participants, or Others

The Exchange has not solicited, and does not intend to solicit, comments on this proposed rule change. The Exchange has not received any unsolicited written comments from members or other interested parties.

III. Date of Effectiveness of the Proposed Rule Change and Timing for Commission Action

The foregoing rule change has become effective pursuant to Section 19(b)(3)(A)(ii) of the Act [19] and Rule 19b–4(f)(2) [20] thereunder. At any time within 60 days of the filing of the proposed rule change, the Commission summarily may temporarily suspend such rule change if it appears to the Commission that such action is necessary or appropriate in the public interest, for the protection of investors, or otherwise in furtherance of the purposes of the Act. If the Commission takes such action, the Commission shall institute proceedings to determine whether the proposed rule change should be approved or disapproved.

IV. Solicitation of Comments

Interested persons are invited to submit written data, views, and arguments concerning the foregoing, including whether the proposed rule change is consistent with the Exchange Act. Comments may be submitted by any of the following methods:

Electronic Comments

- Use the Commission's Internet comment form (*http://www.sec.gov/rules/sro.shtml*); or
- Send an email to *rule-comments@sec.gov.* Please include File Number SR–ISE–2011–67 on the subject line.

Paper Comments

- Send paper comments in triplicate to Elizabeth M. Murphy, Secretary, Securities and Exchange Commission, 100 F Street NE., Washington, DC 20549–1090.

All submissions should refer to File Number SR–ISE–2011–67. This file number should be included on the subject line if email is used. To help the Commission process and review your comments more efficiently, please use only one method. The Commission will post all comments on the Commission's Internet Web site (*http://www.sec.gov/rules/sro.shtml*). Copies of the submission, all subsequent amendments, all written statements with respect to the proposed rule change that are filed with the Commission, and all written communications relating to the proposed rule change between the Commission and any person, other than those that may be withheld from the public in accordance with the provisions of 5 U.S.C. 552, will be

[19] 15 U.S.C. 78s(b)(3)(A)(ii).

[20] 17 CFR 240.19b–4(f)(2).

available for Web site viewing and printing in the Commission's Public Reference Room, 100 F Street NE., Washington, DC 20549, on official business days between the hours of 10 a.m. and 3 p.m. Copies of the filing also will be available for inspection and copying at the principal office of the Exchange. All comments received will be posted without change; the Commission does not edit personal identifying information from submissions. You should submit only information that you wish to make available publicly. All submissions should refer to File Number SR–ISE–2011–67 and should be submitted on or before December 1, 2011.

For the Commission, by the Division of Trading and Markets, pursuant to delegated authority.[21]

Kevin M. O'Neill,

Deputy Secretary.

[FR Doc. 2011–29103 Filed 11–9–11; 8:45 am]

BILLING CODE 8011–01–P

SECURITIES AND EXCHANGE COMMISSION

[Release No. 34–65684; File No. SR–EDGA–2011–35]

Self-Regulatory Organizations; EDGA Exchange, Inc.; Notice of Filing and Immediate Effectiveness of Proposed Rule Change Relating to Amendments to the EDGA Exchange, Inc. Fee Schedule

November 4, 2011.

Pursuant to Section 19(b)(1) of the Securities Exchange Act of 1934 (the ''Act''),[1] and Rule 19b–4 thereunder,[2] notice is hereby given that on October 24, 2011, the EDGA Exchange, Inc. (the ''Exchange'' or the ''EDGA'') filed with the Securities and Exchange Commission (''Commission'') the proposed rule change as described in Items I, II, and III below, which items have been prepared by the self-regulatory organization. The Commission is publishing this notice to solicit comments on the proposed rule change from interested persons.

I. Self-Regulatory Organization's Statement of the Terms of Substance of the Proposed Rule Change

The Exchange proposes to amend its fees and rebates applicable to Members[3] of the Exchange pursuant to EDGA Rule 15.1(a) and (c). All of the changes described herein are applicable to EDGA Members. The text of the proposed rule change is available on the Exchange's Internet Web site at *http://www.directedge.com.*

II. Self-Regulatory Organization's Statement of the Purpose of, and Statutory Basis for, the Proposed Rule Change

In its filing with the Commission, the self-regulatory organization included statements concerning the purpose of, and basis for, the proposed rule change and discussed any comments it received on the proposed rule change. The text of these statements may be examined at the places specified in Item IV below. The self-regulatory organization has prepared summaries, set forth in sections A, B and C below, of the most significant aspects of such statements.

A. Self-Regulatory Organization's Statement of the Purpose of, and Statutory Basis for, the Proposed Rule Change

Purpose

Currently, a rebate of $0.0027 per share is provided to Members who add liquidity on the EDGX Exchange, Inc. (''EDGX'') via an EDGA-originated ROUC routing strategy, as defined in Exchange Rule 11.9(b)(3)(a), during Regular Trading Hours.[4] This situation yields Flag P. The Exchange proposes to apply Flag P's rebate to the Pre-Opening Session[5] and Post-Closing Session[6] so that Members may earn the same rebate for adding liquidity on EDGX as they earn during Regular Trading Hours, which is defined as ''pre & post market'' in EDGA's fee schedule.

The Exchange proposes to implement this amendment to its fee schedule on October 24, 2011.

Basis

The Exchange believes that the proposed rule change is consistent with the objectives of Section 6 of the Act,[7] in general, and furthers the objectives of Section 6(b)(4),[8] in particular, as it is designed to provide for the equitable allocation of reasonable dues, fees and other charges among its members and other persons using its facilities.

The Exchange believes that the rebate for Flag P of $0.0027 per share is an equitable allocation of reasonable dues, fees, and other charges. During the Pre-Opening Session and the Post-Closing Session, the ROUC strategy is the only means for Members to post liquidity to an away exchange. The ROUC routing strategy checks the System for available shares and then is sent sequentially to destinations on the System routing table, Nasdaq OMX BX, and NYSE. If shares remain unexecuted after routing, they are posted to EDGX. The rebate is designed to incentivize Members to also route through EDGA during the Pre-Opening Session and the Post-Closing Session to reach multiple sources of liquidity before routing to other low cost destinations, and thereby potentially increases volume on EDGA to the extent an order using the ROUC routing strategy executes on EDGA. The rebate allows Members to reach multiple sources of liquidity by routing order flow through EDGA rather than going directly to various venues. The rebate also provides Members with a flat rate of $0.0027 per share rebate if the ROUC routing strategy posts to EDGX. When the Exchange's routing broker/dealer, Direct Edge ECN LLC d/b/a DE Route (''DE Route'') achieves certain tiers on EDGX, it is able to pass through a better rebate than if it had not achieved a tier.[9] For example, if the Member had routed to EDGX directly and the order had added liquidity to EDGX, the Member could receive rebates ranging from $0.0023–$0.0034, depending on if a volume threshold were satisfied.[10] The $0.0027 per share rebate thus represents a rate in between these various tiered and non-tiered rebates provided for adding liquidity to EDGX. This allows EDGA Members to share in potential volume tier savings realized by DE Route when it achieves certain tiers.

This type of rate is also similar to EDGA's rate for removing liquidity from LavaFlow (Flag U). The standard removal rate of $0.0029 per share is reduced to $0.0023 per share for orders routed to LavaFlow that achieve certain volume thresholds, as EDGA Members are able to share in potential volume tier savings realized by EDGA when routing to LavaFlow.[11] This rebate is also comparable to other rebates offered by the Exchange that add liquidity, such as the ROOC[12] routing strategy, which yields Flags 8 and 9.[13] For Flags 8 and

[21] 17 CFR 200.30–3(a)(12).

[1] 15 U.S.C. 78s(b)(1).

[2] 17 CFR 240.19b–4.

[3] A Member is any registered broker or dealer, or any person associated with a registered broker or dealer, that has been admitted to membership in the Exchange.

[4] *See* EDGA Exchange Rule 1.5(w).

[5] *See* EDGA Exchange Rule 1.5(q).

[6] *See* EDGA Exchange Rule 1.5(p).

[7] 15 U.S.C. 78f.

[8] 15 U.S.C. 78f(b)(4).

[9] *See* EDGX fee schedule, footnote 1.

[10] *Id.*

[11] *See* footnote 6 of the EDGA fee schedule.

[12] *See* EDGA Exchange Rule 11.9(b)(3)(n).

[13] *See* the EDGA Fee Schedule where Flag 8 offers a rebate of $.0015 where a member routes an order to NYSE Amex using the ROOC routing strategy and adds liquidity, and Flag 9 offers a rebate of $.0021 where a member routes an order to NYSE Arca using the ROOC routing strategy and adds liquidity.

9, the Exchange passes through the default rebate (*i.e.,* non-tier) from the primary listing market (*i.e.,* NYSE Arca, NYSE Amex) to Members because DE Route does not generally achieve a favorable tier rate. This rate is also consistent with the processing of similar routing strategies by EDGA's competitors where EDGA takes into account the rates that it is charged or rebated when routing to other low cost destinations.[14] Finally, as another example, when EDGA routes to a primary exchange's opening cross, (Flag O), the Exchange passes through the tier savings that DE Route achieves on an away exchange to its Members.[15] This tier savings takes the form of a cap of Members' fees at $10,000 per month for using Flag O.

The Exchange believes that the rebate of $0.0027 is reasonable as it is consistent with how other exchanges pass through charges or rebates for orders routed to a different exchange that add liquidity. For example, when Nasdaq routes to Nasdaq PSX, Nasdaq passes back Nasdaq PSX's standard charge of $0.0027 per share. When NYSE Arca routes to NYSE, NYSE Arca passes back the standard NYSE rebate of $0.0015 per share. These rebates generally approximate what the originating exchange receives from the exchange that is routed to plus or minus a certain differential. EDGA's pricing is consistent with this premise.

The Exchange believes that the proposed rebate is non-discriminatory in that it applies uniformly to all Members.

The Exchange also notes that it operates in a highly competitive market in which market participants can readily direct order flow to competing venues if they deem fee levels at a particular venue to be excessive. The proposed rule change reflects a competitive pricing structure designed to incent market participants to direct their order flow to the Exchange. The Exchange believes that the proposed rates are equitable and non-discriminatory in that they apply uniformly to all Members. The Exchange believes the fees and credits remain competitive with those charged by other venues and therefore continue to be reasonable and equitably allocated to Members.

[14] *See also* BATS BZX fee schedule, describing Discounted Destination Specific Routing (''One Under'') to NYSE, NYSE ARCA and NASDAQ. See Securities Exchange Act Release No. 62858, 75 FR 55838 (September 14, 2010) (SR–BATS–2010–023) (modifying the BATS fee schedule in order to amend the fees for its BATS + NYSE Arca destination specific routing option to continue to offer a ''one under'' pricing model).

[15] *See* footnote 5 of the EDGA fee schedule.

B. Self-Regulatory Organization's Statement on Burden on Competition

The proposed rule change does not impose any burden on competition that is not necessary or appropriate in furtherance of the purposes of the Act.

C. Self-Regulatory Organization's Statement on Comments on the Proposed Rule Change Received From Members, Participants or Others

The Exchange has not solicited, and does not intend to solicit, comments on this proposed rule change. The Exchange has not received any unsolicited written comments from members or other interested parties.

III. Date of Effectiveness of the Proposed Rule Change and Timing for Commission Action

The foregoing rule change has become effective pursuant to Section 19(b)(3) of the Act [16] and Rule 19b–4(f)(2) [17] thereunder. At any time within 60 days of the filing of such proposed rule change, the Commission summarily may temporarily suspend such rule change if it appears to the Commission that such action is necessary or appropriate in the public interest, for the protection of investors, or otherwise in furtherance of the purposes of the Act.

IV. Solicitation of Comments

Interested persons are invited to submit written data, views, and arguments concerning the foregoing, including whether the proposed rule change is consistent with the Act. Comments may be submitted by any of the following methods:

Electronic Comments

- Use the Commission's Internet comment form (*http://www.sec.gov/rules/sro.shtml*); or
- Send an email to *rule-comments@sec.gov.* Please include File Number SR–EDGA–2011–35 on the subject line.

Paper Comments

- Send paper comments in triplicate to Elizabeth M. Murphy, Secretary, Securities and Exchange Commission, 100 F Street NE., Washington, DC 20549–1090.

All submissions should refer to File Number SR–EDGA–2011–35. This file number should be included on the subject line if email is used. To help the Commission process and review your comments more efficiently, please use only one method. The Commission will post all comments on the Commission's Internet Web site (*http://www.sec.gov/rules/sro.shtml*). Copies of the submission, all subsequent amendments, all written statements with respect to the proposed rule change that are filed with the Commission, and all written communications relating to the proposed rule change between the Commission and any person, other than those that may be withheld from the public in accordance with the provisions of 5 U.S.C. 552, will be available for Web site viewing and printing in the Commission's Public Reference Room, 100 F Street NE., Washington, DC 20549, on official business days between the hours of 10 a.m. and 3 p.m. Copies of the filing also will be available for inspection and copying at the principal office of the Exchange. All comments received will be posted without change; the Commission does not edit personal identifying information from submissions. You should submit only information that you wish to make available publicly. All submissions should refer to File Number SR–EDGA–2011–35 and should be submitted on or before December 1, 2011.

For the Commission, by the Division of Trading and Markets, pursuant to delegated authority.[18]

Kevin M. O'Neill,

Deputy Secretary.

[FR Doc. 2011–29106 Filed 11–9–11; 8:45 am]

BILLING CODE 8011–01–P

[16] 15 U.S.C. 78s(b)(3)(A).

[17] 17 CFR 19b–4(f)(2).

[18] 17 CFR 200.30–3(a)(12).

SECURITIES AND EXCHANGE COMMISSION

[Release No. 34–65687; File No. SR–BX–2011–073]

Self-Regulatory Organizations; NASDAQ OMX BX, Inc.; Notice of Filing of Proposed Rule Change To Modify Rule 7034 Regarding Low Latency Network Connections

November 4, 2011.

Pursuant to Section 19(b)(1) of the Securities Exchange Act of 1934 (''Act''),[1] and Rule 19b–4 thereunder,[2] notice is hereby given that on October 31, 2011, NASDAQ OMX BX, Inc. (''BX'' or ''Exchange'') filed with the Securities and Exchange Commission (''Commission'') the proposed rule change as described in Items I, II, and III below, which Items have been prepared by the Exchange. The Commission is publishing this notice to

[1] 15 U.S.C. 78s(b)(1).

[2] 17 CFR 240.19b–4.

solicit comments on the proposed rule change from interested persons.

I. Self-Regulatory Organization's Statement of the Terms of Substance of the Proposed Rule Change

The Exchange, pursuant to Section 19(b)(1) of the Act [3] and Rule 19b–4 thereunder,[4] proposes to modify Exchange Rule 7034 entitled ''Co-Location Services'' to establish a program for offering low latency network connections and to establish the initial fees for such connections. The Exchange also proposes administrative modifications to Exchange Rule 7034.

The text of the proposed rule change is available at *http://www.nasdaqomxbx.cchwallstreet.com/*, at the Exchange's principal office, on the Commission's Web site at *http://www.sec.gov*, and at the Commission's Public Reference Room.

II. Self-Regulatory Organization's Statement of the Purpose of, and Statutory Basis for, the Proposed Rule Change

In its filing with the Commission, the Exchange included statements concerning the purpose of and basis for the proposed rule change and discussed any comments it received on the proposed rule change. The text of these statements may be examined at the places specified in Item IV below. The Exchange has prepared summaries, set forth in sections A, B, and C below, of the most significant aspects of such statements.

A. Self-Regulatory Organization's Statement of the Purpose of, and Statutory Basis for, the Proposed Rule Change

1. Purpose

Low Latency Network Connection Option

The purpose of the proposed rule change is to modify Exchange Rule 7034, which governs the Exchange's program for co-location services, to offer new options for low latency network telecommunication connections and to establish the initial fees for such connections. As its initial offering, the Exchange proposes to offer point-to-point telecommunication connectivity from the co-location facility to select major financial trading and co-location venues in the New York and New Jersey metropolitan areas, Toronto, and Chicago.

Background

Currently the Exchange provides a cross connect from a client's cabinet to its requested telecommunication carrier's cabinet (known as a ''telco cross connect''). Through the enhanced point-to-point connectivity service, clients will now have the option to receive low latency network connectivity from the Exchange's data center to the client's chosen venue(s), in addition to the telco cross connect. These connections can be utilized to send market data to and receive orders from the chosen venues.

The enhanced point-to-point connectivity provides the Exchange's co-location customers the opportunity to obtain low latency network connectivity with greater ease than is currently the case, and at a competitive price. Currently, co-location customers obtain similar services by negotiating fees, obtaining service level agreements, and executing service agreements directly with approved telecommunication carriers. A co-located customer is currently charged a monthly negotiated fee by the telecommunications carrier in addition to a cross connection fee by the Exchange. There are currently 16 approved telecommunication carriers with equipment in the Exchange's data center, with additional carriers added at the request of a client. In order to provide the new connectivity option described in this proposed rule change, the Exchange established a low-latency minimum standard,[5] approached those telecommunications carriers with low latency connections to select major financial trading and co-location venues in the New York and New Jersey metropolitan areas, Toronto, and Chicago that met the low-latency minimum standard,[6] and invited them to agree to discounted rates. In effect, the Exchange is obtaining wholesale rates from the carriers and then charging a markup to compensate it for its efforts to negotiate and establish the arrangement and integrate the connectivity into the Exchange co-location connectivity offering, as well as administrative costs associated with establishing and maintaining each new connection. Of the 16 approved telecommunication carriers with equipment in the Exchange's data center, one carrier has, to date, agreed to offer connections under the program and others are in negotiations with the Exchange; additional carriers are eligible to join the program upon meeting the same terms and conditions.

Under the program, co-located customers will have the opportunity to request these new low latency network telecommunication connections through the same process used to request a new co-located cabinet and other co-location services, with no need for direct fee negotiations or new service agreements with telecommunication carriers. The co-located customer will choose the connection destination,[7] but the elimination of direct negotiations and separate service agreements with the telecommunications provider for these services will allow them to obtain a similar service at a competitive price and with greater ease of implementation. In addition, the proposed low latency network connectivity fees include cross connections and eliminate a separate fee for that service.

The Exchange is making the low latency network telecommunication connections available as a convenience to customers and notes that receipt of these connections is completely voluntary. Customers retain the option of contracting directly with telecommunication providers, including either the provider(s) that participate in the program, the current providers in the data center who have not yet agreed to participate, or any new carrier that is approved to install equipment in the Exchange's data center.

Low Latency Pricing Structure

The Exchange proposes: (1) A one-time fee of $1,165 for the installation of 100 MB of telecommunication connectivity to select New York and New Jersey metropolitan area financial trading and co-location venues, which includes fiber telecommunication cross connects within the NASDAQ OMX data center, along with a per-month connectivity fee of $1,650; (2) a one-time fee of $2,150 for the installation of 1G of telecommunication connectivity to select New York and New Jersey metropolitan area financial trading and co-location venues, which includes fiber telecommunication cross connects within the NASDAQ OMX data center, along with a per-month connectivity fee of $2,150; (3) a one-time fee of $5,000 for the installation of 10G of

[3] 15 U.S.C. 78s(b)(1).

[4] 17 CFR 240.19b–4.

[5] The low-latency minimum standard is less than or equal to 0.41 milliseconds for New York/New Jersey routes, less than or equal to 10.1 milliseconds for Toronto routes, and less than or equal to 17 milliseconds for Chicago routes. This standard will change as the technology improves and the latency is further reduced.

[6] The Exchange selected these locations because of the high numbers of member firms and/or liquidity venues located there.

[7] As additional providers join the program, customers will also have the opportunity to choose from among these providers.

telecommunication connectivity to select New York and New Jersey metropolitan area financial trading and co-location venues, which includes fiber telecommunication cross connects within the NASDAQ OMX data center, along with a per-month connectivity fee of $5,000; (4) a one-time fee of $5,150 for the installation of 100 MB of telecommunication connectivity to select Toronto area financial trading and co-location venues, which includes fiber telecommunication cross connects within the NASDAQ OMX data center, along with a per-month connectivity fee of $4,350; (5) a one-time fee of $8,200 for the installation of 1G of telecommunication connectivity to select Toronto area financial trading and co-location venues, which includes fiber telecommunication cross connects within the NASDAQ OMX data center, along with a per-month connectivity fee of $10,450; (6) a one-time fee of $15,150 for the installation of 10G of telecommunication connectivity to select Toronto area financial trading and co-location venues, which includes fiber telecommunication cross connects within the NASDAQ OMX data center, along with a per-month connectivity fee of $32,400; (7) a one-time fee of $4,850 for the installation of 100 MB of telecommunication connectivity to select Chicago area financial trading and co-location venues, which includes fiber telecommunication cross connects within the NASDAQ OMX data center, along with a per-month connectivity fee of $8,350; (8) a one-time fee of $5,900 for the installation of 1G of telecommunication connectivity to select Chicago area financial trading and co-location venues, which includes fiber telecommunication cross connects within the NASDAQ OMX data center, along with a per-month connectivity fee of $16,400; and (9) a one-time fee of $12,050 for the installation of 10G of telecommunication connectivity to select Chicago area financial trading and co-location venues, which includes fiber telecommunication cross connects within the NASDAQ OMX data center, along with a per-month connectivity fee of $39,750.

The fees are based on anticipated bandwidth necessary for the connections and distances to these select venues. Furthermore, the Exchange believes the fees are reasonable as they are similar and competitive with fees charged for similar services by other entities.[8]

Elimination of Obsolete Rule Language Concerning Waiver of Fees

The Exchange also proposes to eliminate references to certain fee waivers that expired July 31, 2011.[9] Since the fee waivers expired, such language is no longer necessary.

2. Statutory Basis

The Exchange believes that its proposal is consistent with Section 6(b) of the Act [10] in general, and Sections 6(b)(4) and (b)(5) of the Act [11] in particular, in that it provides for the equitable allocation of reasonable dues, fees and other charges among members and issuers and other persons using any facility or system which the Exchange operates or controls, and is designed to promote just and equitable principles of trade, to remove impediments to and perfect the mechanism of a free and open market and a national market system, and, in general to protect investors and the public interest. The proposal is designed to provide a method of connectivity between the Exchange's co-location facility and various remote locations. Currently, market participants obtain such connections by negotiating directly with telecommunication providers. Through its efforts to negotiate standard wholesale rates with providers, the Exchange seeks to offer market participants an opportunity to obtain the same connectivity service at a potentially lower cost and with greater ease of implementation. The Exchange believes that this change will be unambiguously beneficial to market participants, who will retain all current options for obtaining connectivity through direct negotiations with telecommunications providers, while also receiving a new option for obtaining the service through the Exchange's program.

The proposed fees for the service cover the costs charged to the Exchange by telecommunication provider(s). The fees charged to the Exchange are based on anticipated bandwidth necessary for the connections and distances to the available locations covered by the service (New York/New Jersey, Chicago, and Toronto). The proposed fees also include a markup to allow the Exchange to cover its administrative costs and to earn a profit on its provision of the service. The Exchange believes that it is reasonable to use fees assessed on this basis as a means to recoup the Exchange's share of the costs associated with the proposed low latency network telecommunication connections, provide a convenience for the customers, and to the extent the costs are covered, provide the Exchange a profit. The Exchange further believes that the proposed fees are reasonable in light of the costs associated with the service and the fees charged by other trading venues for comparable services.[12]

The proposed co-location services are entirely voluntary and available to all members, with uniform fees charged to all market participants that opt to obtain connectivity through the Exchange. Moreover, market participants may choose to obtain services through the Exchange, or may choose to negotiate their own connectivity with 16 different providers. Accordingly, the Exchange's proposed fees are non-discriminatory, and equitably allocated to market participants that choose to avail themselves of the Exchange's services, rather than obtaining comparable services directly.

B. Self-Regulatory Organization's Statement on Burden on Competition

The Exchange does not believe that the proposed rule change will impose any burden on competition not necessary or appropriate in furtherance of the purposes of the Act. First, competition between the Exchange and competing trading venues will be enhanced by allowing the Exchange to offer its market participants connectivity to its data center at a potentially lower price, and with greater ease. As noted above, NYSE already offers comparable services, at comparable fees, to its market participants. Accordingly, the proposal will allow the Exchange to enhance its competitive standing vis-à-vis other trading venues. Conversely, any delay in the effectiveness of the proposed rule change would burden competition by preventing the Exchange from mounting a response to a primary competitor. Second, competition among market participants will be supported by allowing small and large participants to pay a lower price for data center connectivity.

The Exchange believes that the proposed rule change will likewise enhance competition among

[8] *See http://www.cmegroup.com/globex/files/CMEGlobexConnectionAgrmt.pdf; http://nysetechnologies.nyx.com/global-connectivity/sfti-americas/sfti-ip-americas; http://nysetechnologies.nyx.com/sites/technologies.nyx.com/files/SFTI_Americas_Market_Connectivity.pdf; http://nysetechnologies.nyx.com/global-connectivity/sfti-americas.*

[9] *See* Securities Exchange Act Release No. 64631 (June 8, 2011), 76 FR 34785 (June 14, 2011) (SR–BX–2011–032); and Securities Exchange Act Release No. 64840 (July 8, 2011), 76 FR 41534 (July 14, 2011)(SR–BX–2011–043).

[10] 15 U.S.C. 78f(b).

[11] 15 U.S.C. 78f(b)(4) and (5).

[12] *See supra* n. 8.

telecommunications providers that seek to offer connections between market participants and the Exchange's data center. As discussed above, the Exchange does not discriminate among telecommunication providers, but rather allows providers to access the data center upon request of a market participant. As a result, 16 providers are currently connected. Likewise, the Exchange does not discriminate among providers with respect to eligibility to offer connectivity through the Exchange under the service proposed in this filing, provided the latency, destinations, and fees offered by the provider are consistent with the minimum standards established by the Exchange. Thus, telecommunications providers can choose to participate in the program, or can choose to service market participants exclusively through direct negotiations with customers. The Exchange's approach is consistent with its own economic incentives to facilitate as many market participants as possible in connecting to its market. Burdening competition among telecommunications providers would be antithetical to the Exchange's own competitive interests, since impaired competition would make it more expensive and more difficult for market participants to send order flow to the Exchange.

The Exchange expects that the result of the proposal will be a reduction in fees charged to market participants, the very essence of competition. To the extent that fees under the program are less expensive than the rates currently paid by many market participants, the welfare of these market participants will increase, and other telecommunications providers will be incentivized to lower their own rates. This will, in turn, facilitate the introduction of greater volumes of order flow to the Exchange.

C. Self-Regulatory Organization's Statement on Comments on the Proposed Rule Change Received From Members, Participants, or Others

No written comments were either solicited or received.

III. Date of Effectiveness of the Proposed Rule Change and Timing for Commission Action

Within 45 days of the date of publication of this notice in the **Federal Register** or within such longer period (i) as the Commission may designate up to 90 days of such date if it finds such longer period to be appropriate and publishes its reasons for so finding or (ii) as to which the Exchange consents, the Commission shall: (a) by order approve or disapprove such proposed rule change, or (b) institute proceedings to determine whether the proposed rule change should be disapproved.

IV. Solicitation of Comments

Interested persons are invited to submit written data, views, and arguments concerning the foregoing, including whether the proposed rule change is consistent with the Act. Comments may be submitted by any of the following methods:

Electronic Comments

- Use the Commission's Internet comment form (*http://www.sec.gov/rules/sro.shtml*); or
- Send an email to *rule-comments@sec.gov.* Please include File Number SR–BX–2011–073 on the subject line.

Paper Comments

- Send paper comments in triplicate to Elizabeth M. Murphy, Secretary, Securities and Exchange Commission, 100 F Street NE., Washington, DC 20549–1090.

All submissions should refer to File Number SR–BX–2011–073. This file number should be included on the subject line if email is used. To help the Commission process and review your comments more efficiently, please use only one method. The Commission will post all comments on the Commission's Internet Web site (*http://www.sec.gov/rules/sro.shtml*). Copies of the submission, all subsequent amendments, all written statements with respect to the proposed rule change that are filed with the Commission, and all written communications relating to the proposed rule change between the Commission and any person, other than those that may be withheld from the public in accordance with the provisions of 5 U.S.C. 552, will be available for Web site viewing and printing in the Commission's Public Reference Room, 100 F Street NE., Washington, DC 20549, on official business days between the hours of 10 a.m. and 3 p.m. Copies of such filing also will be available for inspection and copying at the principal office of the Exchange. All comments received will be posted without change; the Commission does not edit personal identifying information from submissions. You should submit only information that you wish to make available publicly. All submissions should refer to File Number SR–BX–2011–073 and should be submitted on or before December 1, 2011.

For the Commission, by the Division of Trading and Markets, pursuant to delegated authority.[13]

Kevin M. O'Neill,

Deputy Secretary.

[FR Doc. 2011–29108 Filed 11–9–11; 8:45 am]

BILLING CODE 8011–01–P

SECURITIES AND EXCHANGE COMMISSION

[Release No. 34–65689; File No. SR–Phlx–2011–142]

Self-Regulatory Organizations; NASDAQ OMX PHLX LLC; Notice of Filing and Immediate Effectiveness of Proposed Rule Change To Modify its Co-Location Fee Schedule Regarding Low Latency Network Connections

November 4, 2011.

Pursuant to Section 19(b)(1) of the Securities Exchange Act of 1934 (''Act''),[1] and Rule 19b–4 thereunder,[2] notice is hereby given that on October 31, 2011, NASDAQ OMX PHLX LLC (''Phlx'' or ''Exchange'') filed with the Securities and Exchange Commission (''Commission'') the proposed rule change as described in Items I, II, and III below, which Items have been prepared by the Exchange. The Commission is publishing this notice to solicit comments on the proposed rule change from interested persons.

I. Self-Regulatory Organization's Statement of the Terms of Substance of the Proposed Rule Change

The Exchange proposes to modify the Exchange Fee Schedule, Section X(b) entitled ''Co-Location Services'' to establish a program for offering low latency network connections and to establish the initial fees for such connections. The Exchange also proposes administrative modifications to the Exchange Fee Schedule, Section X(b).

The text of the proposed rule change is available at *http://www.nasdaqtrader.com/micro.aspx?id=PHLXRulefilings,* at the Exchange's principal office, on the Commission's Web site at *http://www.sec.gov,* and at the Commission's Public Reference Room.

II. Self-Regulatory Organization's Statement of the Purpose of, and Statutory Basis for, the Proposed Rule Change

In its filing with the Commission, the Exchange included statements

[13] 17 CFR 200.30–3(a)(12).

[1] 15 U.S.C. 78s(b)(1).

[2] 17 CFR 240.19b–4.

concerning the purpose of and basis for the proposed rule change and discussed any comments it received on the proposed rule change. The text of these statements may be examined at the places specified in Item IV below. The Exchange has prepared summaries, set forth in sections A, B, and C below, of the most significant aspects of such statements.

A. Self-Regulatory Organization's Statement of the Purpose of, and Statutory Basis for, the Proposed Rule Change

1. Purpose

Low Latency Network Connection Option

The purpose of the proposed rule change is to modify the Exchange Fee Schedule, Section X(b) entitled ''Co-Location Services'' to offer new options for low latency network telecommunication connections and to establish the initial fees for such connections. As its initial offering, the Exchange proposes to offer point-to-point telecommunication connectivity from the co-location facility to select major financial trading and co-location venues in the New York and New Jersey metropolitan areas, Toronto, and Chicago.

Background

Currently the Exchange provides a cross connect from a client's cabinet to its requested telecommunication carrier's cabinet (known as a ''telco cross connect''). Through the enhanced point-to-point connectivity service, clients will now have the option to receive low latency network connectivity from the Exchange's data center to the client's chosen venue(s), in addition to the telco cross connect. These connections can be utilized to send market data to and receive orders from the chosen venues.

The enhanced point-to-point connectivity provides the Exchange's co-location customers the opportunity to obtain low latency network connectivity with greater ease than is currently the case, and at a competitive price. Currently, co-location customers obtain similar services by negotiating fees, obtaining service level agreements, and executing service agreements directly with approved telecommunication carriers. A co-located customer is currently charged a monthly negotiated fee by the telecommunications carrier in addition to a cross connection fee by the Exchange. There are currently 16 approved telecommunication carriers with equipment in the Exchange's data center, with additional carriers added at the request of a client. In order to provide the new connectivity option described in this proposed rule change, the Exchange established a low-latency minimum standard,[3] approached those telecommunications carriers with low latency connections to select major financial trading and co-location venues in the New York and New Jersey metropolitan areas, Toronto, and Chicago that met the low-latency minimum standard,[4] and invited them to agree to discounted rates. In effect, the Exchange is obtaining wholesale rates from the carriers and then charging a markup to compensate it for its efforts to negotiate and establish the arrangement and integrate the connectivity into the Exchange co-location connectivity offering, as well as administrative costs associated with establishing and maintaining each new connection. Of the 16 approved telecommunication carriers with equipment in the Exchange's data center, one carrier has, to date, agreed to offer connections under the program and others are in negotiations with the Exchange; additional carriers are eligible to join the program upon meeting the same terms and conditions.

Under the program, co-located customers will have the opportunity to request these new low latency network telecommunication connections through the same process used to request a new co-located cabinet and other co-location services, with no need for direct fee negotiations or new service agreements with telecommunication carriers. The co-located customer will choose the connection destination,[5] but the elimination of direct negotiations and separate service agreements with the telecommunications provider for these services will allow them to obtain a similar service at a competitive price and with greater ease of implementation. In addition, the proposed low latency network connectivity fees include cross connections and eliminate a separate fee for that service.

The Exchange is making the low latency network telecommunication connections available as a convenience to customers and notes that receipt of these connections is completely voluntary. Customers retain the option of contracting directly with telecommunication providers, including either the provider(s) that participate in the program, the current providers in the data center who have not yet agreed to participate, or any new carrier that is approved to install equipment in the Exchange's data center.

Low Latency Pricing Structure

The Exchange proposes: (1) A one-time fee of $1,165 for the installation of 100 MB of telecommunication connectivity to select New York and New Jersey metropolitan area financial trading and co-location venues, which includes fiber telecommunication cross connects within the NASDAQ OMX data center, along with a per-month connectivity fee of $1,650; (2) a one-time fee of $2,150 for the installation of 1G of telecommunication connectivity to select New York and New Jersey metropolitan area financial trading and co-location venues, which includes fiber telecommunication cross connects within the NASDAQ OMX data center, along with a per-month connectivity fee of $2,150; (3) a one-time fee of $5,000 for the installation of 10G of telecommunication connectivity to select New York and New Jersey metropolitan area financial trading and co-location venues, which includes fiber telecommunication cross connects within the NASDAQ OMX data center, along with a per-month connectivity fee of $5,000; (4) a one-time fee of $5,150 for the installation of 100 MB of telecommunication connectivity to select Toronto area financial trading and co-location venues, which includes fiber telecommunication cross connects within the NASDAQ OMX data center, along with a per-month connectivity fee of $4,350; (5) a one-time fee of $8,200 for the installation of 1G of telecommunication connectivity to select Toronto area financial trading and co-location venues, which includes fiber telecommunication cross connects within the NASDAQ OMX data center, along with a per-month connectivity fee of $10,450; (6) a one-time fee of $15,150 for the installation of 10G of telecommunication connectivity to select Toronto area financial trading and co-location venues, which includes fiber telecommunication cross connects within the NASDAQ OMX data center, along with a per-month connectivity fee of $32,400; (7) a one-time fee of $4,850 for the installation of 100 MB of telecommunication connectivity to select Chicago area financial trading and co-location venues, which includes fiber

[3] The low-latency minimum standard is less than or equal to 0.41 milliseconds for New York/New Jersey routes, less than or equal to 10.1 milliseconds for Toronto routes, and less than or equal to 17 milliseconds for Chicago routes. This standard will change as the technology improves and the latency is further reduced.

[4] The Exchange selected these locations because of the high numbers of member firms and/or liquidity venues located there.

[5] As additional providers join the program, customers will also have the opportunity to choose from among these providers.

telecommunication cross connects within the NASDAQ OMX data center, along with a per-month connectivity fee of $8,350; (8) a one-time fee of $5,900 for the installation of 1G of telecommunication connectivity to select Chicago area financial trading and co-location venues, which includes fiber telecommunication cross connects within the NASDAQ OMX data center, along with a per-month connectivity fee of $16,400; and (9) a one-time fee of $12,050 for the installation of 10G of telecommunication connectivity to select Chicago area financial trading and co-location venues, which includes fiber telecommunication cross connects within the NASDAQ OMX data center, along with a per-month connectivity fee of $39,750.

The fees are based on anticipated bandwidth necessary for the connections and distances to these select venues. Furthermore, the Exchange believes the fees are reasonable as they are similar and competitive with fees charged for similar services by other entities.[6]

Elimination of Obsolete Rule Language Concerning Waiver of Fees

The Exchange also proposes to eliminate references to certain fee waivers that expired July 31, 2011.[7] Since the fee waivers expired, such language is no longer necessary.

2. Statutory Basis

The Exchange believes that its proposal is consistent with Section 6(b) of the Act[8] in general, and Sections 6(b)(4) and (b)(5) of the Act[9] in particular, in that it provides for the equitable allocation of reasonable dues, fees and other charges among members and issuers and other persons using any facility or system which the Exchange operates or controls, and is designed to promote just and equitable principles of trade, to remove impediments to and perfect the mechanism of a free and open market and a national market system, and, in general to protect investors and the public interest. The proposal is designed to provide a method of connectivity between the Exchange's co-location facility and various remote locations. Currently, market participants obtain such connections by negotiating directly with telecommunication providers. Through its efforts to negotiate standard wholesale rates with providers, the Exchange seeks to offer market participants an opportunity to obtain the same connectivity service at a potentially lower cost and with greater ease of implementation. The Exchange believes that this change will be unambiguously beneficial to market participants, who will retain all current options for obtaining connectivity through direct negotiations with telecommunications providers, while also receiving a new option for obtaining the service through the Exchange's program.

The proposed fees for the service cover the costs charged to the Exchange by telecommunication provider(s). The fees charged to the Exchange are based on anticipated bandwidth necessary for the connections and distances to the available locations covered by the service (New York/New Jersey, Chicago, and Toronto). The proposed fees also include a markup to allow the Exchange to cover its administrative costs and to earn a profit on its provision of the service. The Exchange believes that it is reasonable to use fees assessed on this basis as a means to recoup the Exchange's share of the costs associated with the proposed low latency network telecommunication connections, provide a convenience for the customers, and to the extent the costs are covered, provide the Exchange a profit. The Exchange further believes that the proposed fees are reasonable in light of the costs associated with the service and the fees charged by other trading venues for comparable services.[10]

The proposed co-location services are entirely voluntary and available to all members, with uniform fees charged to all market participants that opt to obtain connectivity through the Exchange. Moreover, market participants may choose to obtain services through the Exchange, or may choose to negotiate their own connectivity with 16 different providers. Accordingly, the Exchange's proposed fees are non-discriminatory, and equitably allocated to market participants that choose to avail themselves of the Exchange's services, rather than obtaining comparable services directly.

B. Self-Regulatory Organization's Statement on Burden on Competition

The Exchange does not believe that the proposed rule change will impose any burden on competition not necessary or appropriate in furtherance of the purposes of the Act. First, competition between the Exchange and competing trading venues will be enhanced by allowing the Exchange to offer its market participants connectivity to its data center at a potentially lower price, and with greater ease. As noted above, NYSE already offers comparable services, at comparable fees, to its market participants. Accordingly, the proposal will allow the Exchange to enhance its competitive standing vis-à-vis other trading venues. Conversely, any delay in the effectiveness of the proposed rule change would burden competition by preventing the Exchange from mounting a response to a primary competitor. Second, competition among market participants will be supported by allowing small and large participants to pay a lower price for data center connectivity.

The Exchange believes that the proposed rule change will likewise enhance competition among telecommunications providers that seek to offer connections between market participants and the Exchange's data center. As discussed above, the Exchange does not discriminate among telecommunication providers, but rather allows providers to access the data center upon request of a market participant. As a result, 16 providers are currently connected. Likewise, the Exchange does not discriminate among providers with respect to eligibility to offer connectivity through the Exchange under the service proposed in this filing, provided the latency, destinations, and fees offered by the provider are consistent with the minimum standards established by the Exchange. Thus, telecommunications providers can choose to participate in the program, or can choose to service market participants exclusively through direct negotiations with customers. The Exchange's approach is consistent with its own economic incentives to facilitate as many market participants as possible in connecting to its market. Burdening competition among telecommunications providers would be antithetical to the Exchange's own competitive interests, since impaired competition would make it more expensive and more difficult for market participants to send order flow to the Exchange.

The Exchange expects that the result of the proposal will be a reduction in

[6] *See http://www.cmegroup.com/globex/files/CMEGlobexConnectionAgrmt.pdf; http://nysetechnologies.nyx.com/global-connectivity/sfti-americas/sfti-ip-americas; http://nysetechnologies.nyx.com/sites/technologies.nyx.com/files/SFTI_Americas_Market_Connectivity.pdf; http://nysetechnologies.nyx.com/global-connectivity/sfti-americas.*

[7] *See* Securities Exchange Act Release No. 64629 (June 8, 2011), 76 FR 34798 (June 14, 2011) (SR–Phlx–2011–77); and Securities Exchange Act Release No. 64842 (July 8, 2011), 76 FR 41536 (July 14, 2011) (SR–Phlx–2011–97).

[8] 15 U.S.C. 78f(b).

[9] 15 U.S.C. 78f(b)(4) and (5).

[10] *See supra* n. 6.

fees charged to market participants, the very essence of competition. To the extent that fees under the program are less expensive than the rates currently paid by many market participants, the welfare of these market participants will increase, and other telecommunications providers will be incentivized to lower their own rates. This will, in turn, facilitate the introduction of greater volumes of order flow to the Exchange.

C. Self-Regulatory Organization's Statement on Comments on the Proposed Rule Change Received From Members, Participants, or Others

No written comments were either solicited or received.

III. Date of Effectiveness of the Proposed Rule Change and Timing for Commission Action

Within 45 days of the date of publication of this notice in the **Federal Register** or within such longer period (i) as the Commission may designate up to 90 days of such date if it finds such longer period to be appropriate and publishes its reasons for so finding or (ii) as to which the Exchange consents, the Commission shall: (a) By order approve or disapprove such proposed rule change, or (b) institute proceedings to determine whether the proposed rule change should be disapproved.

IV. Solicitation of Comments

Interested persons are invited to submit written data, views, and arguments concerning the foregoing, including whether the proposed rule change is consistent with the Act. Comments may be submitted by any of the following methods:

Electronic Comments

- Use the Commission's Internet comment form (*http://www.sec.gov/rules/sro.shtml*); or
- Send an email to *rule-comments@sec.gov.* Please include File Number SR–Phlx–2011–142 on the subject line.

Paper Comments

- Send paper comments in triplicate to Elizabeth M. Murphy, Secretary, Securities and Exchange Commission, 100 F Street NE., Washington, DC 20549–1090.

All submissions should refer to File Number SR–Phlx–2011–142. This file number should be included on the subject line if email is used. To help the Commission process and review your comments more efficiently, please use only one method. The Commission will post all comments on the Commission's Internet Web site (*http://www.sec.gov/rules/sro.shtml*). Copies of the submission, all subsequent amendments, all written statements with respect to the proposed rule change that are filed with the Commission, and all written communications relating to the proposed rule change between the Commission and any person, other than those that may be withheld from the public in accordance with the provisions of 5 U.S.C. 552, will be available for Web site viewing and printing in the Commission's Public Reference Room, 100 F Street NE., Washington, DC 20549, on official business days between the hours of 10 a.m. and 3 p.m. Copies of such filing also will be available for inspection and copying at the principal office of the Exchange. All comments received will be posted without change; the Commission does not edit personal identifying information from submissions. You should submit only information that you wish to make available publicly. All submissions should refer to File Number SR–Phlx–2011–142 and should be submitted on or before December 1, 2011.

For the Commission, by the Division of Trading and Markets, pursuant to delegated authority.[11]

Kevin M. O'Neill,

Deputy Secretary.

[FR Doc. 2011–29110 Filed 11–9–11; 8:45 am]

BILLING CODE 8011–01–P

[11] 17 CFR 200.30–3(a)(12).

SECURITIES AND EXCHANGE COMMISSION

[Release No. 34–65695; File No. SR–FINRA–2011–051]

Self-Regulatory Organizations; Financial Industry Regulatory Authority, Inc.; Order Approving Proposed Rule Change To Allow FINRA To Grant Exemptions From Certain Equity Trade Reporting Obligations for Certain Alternative Trading Systems

November 4, 2011.

I. Introduction

On September 16, 2011, the Financial Industry Regulatory Authority, Inc. (''FINRA'') filed with the Securities and Exchange Commission (''SEC'' or ''Commission''), pursuant to Section 19(b)(1) of the Securities Exchange Act of 1934 (''Act'')[1] and Rule 19b–4 thereunder,[2] a proposed rule change to adopt new rules that will allow FINRA to grant exemptions from certain equity trade reporting obligations for alternative trading systems (''ATSs'') meeting specified criteria. The proposed rule change was published for comment in the **Federal Register** on September 29, 2011.[3] The Commission received three comment letters on the proposed rule change.[4] FINRA responded to the comments in a letter dated November 4, 2011.[5] This order approves the proposed rule change.

II. Description of the Proposal

Proposed FINRA Rules 6183 and 6625 will provide FINRA with new authority to exempt a member ATS that meets the specified criteria from the trade reporting obligation under the equity trade reporting rules. In addition, FINRA will adopt a conforming change to Rule 9610 to specify that FINRA has exemptive authority under the new rules.

As described in the Notice, existing FINRA rules require the reporting of over-the-counter (''OTC'') transactions in equity securities[6] by the ''executing party.'' The term ''executing party'' is defined as the FINRA member that receives an order for handling or execution or is presented an order against its quote, does not subsequently re-route the order, and executes the transaction. For a trade executed on an ATS, the ATS is the ''executing party'' and thus has the trade reporting obligation.[7]

[1] 15 U.S.C. 78s(b)(1).

[2] 17 CFR 240.19b–4.

[3] *See* Securities Exchange Act Release No. 65388 (September 23, 2011), 76 FR 60567 (July 26, 2011) (''Notice'').

[4] *See* letter from Suzanne H. Shatto, dated October 20, 2011 (''Shatto Letter''); letter from Naphtali M. Hamlet, Investor, dated October 21, 2011 (''Hamlet Letter''); letter from Daniel Zinn, General Counsel, OTC Markets Group Inc., dated October 20, 2011 (''OTC Markets Letter'').

[5] *See* letter from Lisa C. Horrigan, Associate General Counsel, FINRA, to Elizabeth M. Murphy, Secretary, Commission, dated November 4, 2011 (''FINRA Response'').

[6] Specifically, these transactions are: (1) Transactions in NMS stocks, as defined in SEC Rule 600(b) of Regulation NMS, effected otherwise than on an exchange, which are reported through the Alternative Display Facility or a Trade Reporting Facility; and (2) transactions in OTC Equity Securities and Restricted Equity Securities, as those terms are defined in Rule 6420, which are reported through the OTC Reporting Facility. As noted in the proposal, the new rules will apply to OTC transactions in equity securities only. The rules will not apply to TRACE-eligible securities. TRACE-eligible securities are subject to a separate reporting structure under FINRA's Rule 6700 Series.

[7] *See* Securities Exchange Act Release No. 58903 (November 5, 2008), 73 FR 67905 (November 17, 2008) (Order Approving File No. SR–FINRA–2008–011); and *Regulatory Notice* 09–08 (January 2009). *See also, e.g.,* Trade Reporting Frequently Asked Questions, Sections 307 and 308, available at *http://www.finra.org/Industry/Regulation/Guidance/P038942.* As described in the proposal, the term ATS includes electronic communications networks.

Under FINRA's new rules, for an ATS to qualify for an exemption, the following conditions must be satisfied:

First, trades must be between ATS subscribers that are both FINRA members. For any trades between non-members or a FINRA member and a non-member, the exemption will not apply, and the ATS will have the trade reporting obligation under FINRA rules.

In addition, the ATS must demonstrate that the following criteria are met: (1) The member subscribers must be fully disclosed to one another at all times on the ATS; (2) although the system brings together the orders of buyers and sellers and uses established, non-discretionary methods under which such orders interact with each other, the system does not permit automatic execution. A member subscriber must take affirmative steps beyond the submission of an order to agree to a trade with another member subscriber; (3) the trade does not pass through any ATS account, and the ATS does not in any way hold itself out to be a party to the trade; and (4) the ATS does not exchange shares or funds on behalf of the member subscribers, take either side of the trade for clearing or settlement purposes, including, but not limited to, at DTC or otherwise, or in any other way insert itself into the trade.

The ATS and its FINRA member subscribers must also acknowledge and agree in writing that the ATS shall not be deemed a party to the trade for purposes of trade reporting and that trades shall be reported by the subscriber that, as between the two counterparties to the trade, would satisfy the definition of ''executing party'' under FINRA trade reporting rules. An ATS that is granted an exemption would have to obtain such written agreements from all of its FINRA member subscribers prior to relying on the exemption. Any ATS granted an exemption under the new rules would be required to retain the written agreements and be able to produce them to FINRA upon request.

Finally, the ATS must agree to provide to FINRA on a monthly basis, or such other basis as prescribed by FINRA, data relating to the volume of trades, by security, executed by the ATS's member subscribers using the ATS's system (*e.g.,* number of trades, number of shares traded and total settlement value for each security traded). The ATS also must acknowledge that failure to report such data to FINRA, in addition to constituting a violation of FINRA rules, would result in revocation of any exemption granted pursuant to the new rules.

Where FINRA grants an exemption pursuant to Rules 6183 or 6625, the ATS will not be deemed a party to the trade for purposes of FINRA trade reporting rules and will not be identified in trade reports submitted to FINRA. The ATS will bear no responsibility for reporting such transactions. The transaction, however, must be reported to FINRA by the member subscriber that, as between the two member subscribers who are the counterparties, satisfies the definition of ''executing party'' under paragraph (b) of Rules 6282, 6380A, 6380B, or 6622. In addition, where an ATS has been granted an exemption under the new rules, the member subscribers, as the parties identified in the trade report, will be assessed regulatory transaction fees under Section 3 of Schedule A to the FINRA By-Laws and the Trading Activity Fee under FINRA By-Laws, Schedule A, § 1(b)(2). The ATS would not be assessed such fees.

Notwithstanding an exemption, any transactions that occur through the ATS would be considered volume of the ATS for purposes of, among other things, various provisions of Regulation ATS. Such provisions include the recordkeeping requirements of Rule 302,[8] the display requirements under Rule 301(b)(3),[9] the access requirements under Rule 301(b)(5),[10] and the capacity, integrity, and security requirements of Rule 301(b)(6).[11]

The effect of an exemption provided pursuant to FINRA Rules 6183 and 6625 is illustrated in the following example that was included in the Notice: FINRA member BD1 displays a quote through ATS X and member BD2 routes an order to BD1 for the price and size of BD1's quote using a messaging system provided by ATS X. BD1 does not subsequently re-route the order and executes the trade. Assuming that ATS X meets all of the criteria set forth in the proposed rule and has been granted an exemption by FINRA, it will not be deemed a party to the trade for trade reporting purposes and should not be identified as such in the trade report submitted to FINRA. In this example, BD1 is the ''executing party'' and has the obligation to report the trade between BD1 and BD2.

FINRA stated that the proposed rule change will be effective on the date of Commission approval.

III. Summary of Comment Letters

Among the three comment letters received, two of the commenters expressed concern about dark pools and their potential impact on the fairness and transparency of the national market system.[12] One of these commenters suggested that dark pools be prohibited entirely.[13] FINRA responded that these arguments are not germane to the proposal, which does not change the level of transparency that currently exists.[14] FINRA stated that all trades executed on an ATS, including a dark pool, must be reported to FINRA and are publicly disseminated. With respect to any ATS that is granted an exemption under the proposed rule change, all of the trades executed on the ATS would continue to be reported for public dissemination.

Another commenter challenged the need for any new rules at all.[15] This commenter asserted that any ATS that meets the criteria set out in the proposed rule change would not be an executing party, and consequently, would not be subject to any reporting obligation under current FINRA rules. On this basis, the commenter concluded that the proposal is unnecessary and should not be approved by the Commission, because no FINRA exemption is necessary for entities that bear no regulatory obligation.

FINRA responded that this commenter's assertion is based on an erroneous interpretation of FINRA rules and directly at odds with statements made by FINRA in the original filing.[16] FINRA noted previous interpretations and guidance that an ATS is the ''executing party'' and has the trade reporting obligation where the transaction is executed on the ATS.[17] FINRA reiterated its belief that an ATS that satisfies the criteria set forth in the proposal has a more limited involvement in the trade execution than the member subscribers, and therefore, the proposed exemption is appropriate in this narrow instance.

The commenter further stated that, notwithstanding its opposition, were the Commission inclined to approve FINRA's proposal, the proposed rules should be modified.[18] First, the commenter asserted that the exemption authority should be expanded to cover TRACE-eligible securities, because there is no meaningful basis to distinguish the reporting rules and obligations

[8] 17 CFR 242.302.

[9] 17 CFR 242.301(b)(3).

[10] 17 CFR 242.301(b)(5).

[11] 17 CFR 242.301(b)(6).

[12] *See* Shatto Letter; Hamlet Letter.

[13] *See* Shatto Letter.

[14] *See* FINRA Response at 3.

[15] *See* OTC Markets Letter at 1–2.

[16] *See* FINRA Response at 1–2.

[17] *See* note 7 *supra.*

[18] *See* OTC Markets Letter at 2.

associated with this class of securities from those for other securities.

FINRA responded that the comment goes beyond the scope of the instant proposal, but that it would consider the comment separately.[19] FINRA stated that if it determines that a similar exemption is appropriate for TRACE reporting, FINRA would submit a separate rule filing to effect that change.

In addition, the commenter argued that the criteria for the exemption should be clarified in certain respects.[20] FINRA disagreed with the comment and reasserted its belief that the criteria for the exemption were sufficiently clear.[21]

Finally, the commenter argued that the proposed exemption should be automatic, and not subject to FINRA staff discretion.[22] The commenter maintained that FINRA has not explained the ''relevant factors'' that FINRA staff would consider, which could lead to inconsistent application of the new rules. FINRA responded that it is important for its staff to have the opportunity to review an ATS's application for exemptive relief and to make a determination whether the ATS meets the criteria in the proposed rule before the ATS is able to rely on the exemption.[23] FINRA believes that it is important to know in advance which party—the ATS or one of its subscribers—will have the trade reporting obligation. FINRA stated that, while it expects to grant an exemption to any ATS that can demonstrate that it meets all of the criteria set forth in the new rules, FINRA staff should have notice and discretion in the event of a disagreement with an ATS about whether it qualifies for an exemption under the proposed rule. FINRA plans to post on its Web site which ATSs are operating under any exemption granted pursuant to the new rules.

IV. Discussion and Commission's Findings

The Commission has carefully reviewed the proposed rule change, the comments received, and FINRA's response to the comments, and finds that the proposed rule change is consistent with the requirements of the Act and the rules and regulations thereunder applicable to a national securities association.[24] In particular, the Commission finds that the proposed rule change is consistent with the provisions of Section 15A(b)(6) of the Act,[25] which requires, among other things, that FINRA rules be designed to prevent fraudulent and manipulative acts and practices, to promote just and equitable principles of trade, and, in general, to protect investors and the public interest.

As described above, the proposal is designed to provide FINRA the authority to exempt an ATS from reporting obligations under FINRA's equity trade reporting rules where the ATS does not perform all the functions normally associated with those of an executing party. Where an exemption is granted, the duty to report will fall on one of the subscribers that is a counterparty to the trade and that itself satisfies the definition of ''executing party.'' The Commission believes that the exemption mechanism is reasonably designed to promote efficient reporting of OTC transactions in equity securities, and that FINRA can—consistent with the Exchange Act—be afforded some discretion regarding which of its members should have the duty to report a trade when there are multiple members who could potentially assume that duty.

The Commission does not believe that any commenters raised issues that would preclude approval of this proposal. The Commission believes that the proposal is sufficiently clear, and modifications are not necessary to allow the Commission to find it consistent with the Act. Furthermore, the comments that raised issues with dark pools go beyond the scope of the present proposal. All transactions currently subject to reporting will continue to be reported; the new rules merely allow FINRA to reassign the duty to report in certain circumstances.

V. Conclusion

It is therefore ordered, pursuant to Section 19(b)(2) of the Act,[26] that the proposed rule change (SR–FINRA–2011–051) be, and it hereby is, approved.

For the Commission, by the Division of Trading and Markets, pursuant to delegated authority.[27]

Kevin M. O'Neill,

Deputy Secretary.

[FR Doc. 2011–29114 Filed 11–9–11; 8:45 am]

BILLING CODE 8011–01–P

[19] *See* FINRA Response at 2.

[20] *See* OTC Markets Letter at 3–6.

[21] *See* FINRA Response at 2.

[22] *See* OTC Markets Letter at 7.

[23] *See* FINRA Response at 2–3.

[24] In approving this proposed rule change, the Commission has considered the rule's impact on efficiency, competition, and capital formation. *See* 15 U.S.C. 78c(f).

[25] 15 U.S.C. 78o–3(b)(6).

[26] 15 U.S.C. 78s(b)(2).

[27] 17 CFR 200.30–3(a)(12).

SECURITIES AND EXCHANGE COMMISSION

[Release No. 34–65694; File No. SR–BATS–2011–046]

Self-Regulatory Organizations; BATS Exchange, Inc.; Notice of Filing and Immediate Effectiveness of Proposed Rule Change Related to Fees for Use of BATS Exchange, Inc.

November 4, 2011.

Pursuant to Section 19(b)(1) of the Securities Exchange Act of 1934 (the ''Act'')[1] and Rule 19b–4 thereunder,[2] notice is hereby given that on October 31, 2011, BATS Exchange, Inc. (the ''Exchange'' or ''BATS'') filed with the Securities and Exchange Commission (''Commission'') the proposed rule change as described in Items I, II, and III below, which Items have been prepared by the Exchange. The Exchange has designated the proposed rule change as one establishing or changing a member due, fee, or other charge imposed by the Exchange under Section 19(b)(3)(A)(ii) of the Act[3] and Rule 19b–4(f)(2) thereunder,[4] which renders the proposed rule change effective upon filing with the Commission. The Commission is publishing this notice to solicit comments on the proposed rule change from interested persons.

I. Self-Regulatory Organization's Statement of the Terms of Substance of the Proposed Rule Change

The Exchange proposes [sic] amend the fee schedule applicable to Members[5] and non-members of the Exchange pursuant to BATS Rules 15.1(a) and (c). While changes to the fee schedule pursuant to this proposal will be effective upon filing, the changes will become operative on November 1, 2011.

The text of the proposed rule change is available at the Exchange's Web site at *http://www.batstrading.com,* at the principal office of the Exchange, and at the Commission's Public Reference Room.

II. Self-Regulatory Organization's Statement of the Purpose of, and Statutory Basis for, the Proposed Rule Change

In its filing with the Commission, the Exchange included statements concerning the purpose of and basis for the proposed rule change and discussed

[1] 15 U.S.C. 78s(b)(1).

[2] 17 CFR 240.19b–4.

[3] 15 U.S.C. 78s(b)(3)(A)(ii).

[4] 17 CFR 240.19b–4(f)(2).

[5] A Member is any registered broker or dealer that has been admitted to membership in the Exchange.

any comments it received on the proposed rule change. The text of these statements may be examined at the places specified in Item IV below. The Exchange has prepared summaries, set forth in Sections A, B, and C below, of the most significant parts of such statements.

A. Self-Regulatory Organization's Statement of the Purpose of, and Statutory Basis for, the Proposed Rule Change

1. Purpose

The Exchange proposes to modify the ''Options Pricing'' section of its fee schedule to: (i) Recognize a new category of participant, a ''Professional'', in light of recent changes the Exchange made to its rules that become operative November 1, 2011; and (ii) modify the Quoting Incentive Program, which is a program intended to incentivize sustained, aggressive quoting on the BATS options platform (''BATS Options''). In addition to these changes, the Exchange proposes to correct a typographical error on the fee schedule. Specifically, the Exchange no longer offers a discounted fee to remove liquidity for Firm or Market Makers that meet certain average daily volume requirements but the fee schedule still contains language indicating that such a reduced fee is available. The Exchange proposes to delete this language.

Professional Pricing

The Exchange recently modified the rules applicable to BATS Options to amend Rule 16.1 (Definitions) to adopt a definition of ''Professional'' on the Exchange and require that all Professional orders be appropriately marked by members of BATS Options (''Options Members'').[6] As defined in Rule 16.1, which, as modified becomes operative November 1, 2011, the term ''Professional'' means any person or entity that (i) is not a broker or dealer in securities, and (ii) places more than 390 orders in listed options per day on average during a calendar month for its own beneficial account(s).

The Exchange currently charges and provides rebates based on the capacity in which a User is acting, either as a Firm, as a Market Maker, or on behalf of a Customer. With respect to rebates, the Exchange also currently differentiates the rebate paid to Firms and Market Makers depending on the capacity of the counter-party to the trade, either a Customer or another Firm or Market Maker. In order to properly align Professionals with other sophisticated market participants, the Exchange proposes to modify its fee schedule by listing a Professional with a Firm and Market Maker in every instance where a distinction is made for options fees and rebates based on the capacity of the User or the counter-party. For instance, the Exchange currently charges a fee of $0.42 per contract for all Firm and Market Maker orders that remove liquidity from BATS Options. The Exchange proposes to charge this same fee for all Professional orders that remove liquidity from BATS Options.

Modification to Quoting Incentive Program (QIP)

BATS Options offers a Quoting Incentive Program (QIP), through which Members receive a rebate of $0.05 per contract, in addition to any other applicable liquidity rebate, for executions subject to the QIP. Currently to qualify for the QIP a BATS Options Market Maker must be at the NBB or NBO 70% of the time for series trading between $0.03 and $5.00 for the front three (3) expiration months in that underlying during the current trading month. A Member not registered as a BATS Options Market Maker can also qualify for the QIP by quoting at the NBB or NBO 80% of the time in the same series. The Exchange proposes to modify the qualification levels to make qualifying for the QIP attainable by more Members and BATS Options Market Makers. Specifically, the Exchange proposes to reduce the level at which a BATS Options Market Maker must be at the NBB or NBO from 70% to 60% and for Members not registered as a BATS Options Market Maker from 80% to 70%.

All other aspects of the QIP currently in place will remain the same. As is true under the current operation of the QIP, the Exchange will determine whether a Member qualifies for QIP rebates at the end of each month by looking back at each Member's (including BATS Options Market Makers) quoting statistics during that month. If at the end of the month a Market Maker meets the 60% criteria or a Member that is not registered as a Market Maker meets the 70% criteria, the Exchange will provide the additional rebate for all executions subject to the QIP executed by that Member during that month. The Exchange will provide Members with a report on a daily basis with quoting statistics so such Members can determine whether or not they are meeting the QIP criteria. The Exchange is not proposing to impose any ADV requirements in order to qualify for the QIP at this time.

2. Statutory Basis

The Exchange believes that the proposed rule change is consistent with the requirements of the Act and the rules and regulations thereunder that are applicable to a national securities exchange, and, in particular, with the requirements of Section 6 of the Act.[7] Specifically, the Exchange believes that the proposed rule change is consistent with Section 6(b)(4) of the Act,[8] in that it provides for the equitable allocation of reasonable dues, fees and other charges among members and other persons using any facility or system which the Exchange operates or controls. The Exchange notes that it operates in a highly competitive market in which market participants can readily direct order flow to competing venues if they deem fee levels at a particular venue to be excessive.

The Exchange believes it is equitable, reasonable and non-discriminatory to assess fees and provide liquidity rebates for Professional orders that are the same as those fees and rebates for Firms and Market Makers. The Exchange believes that application of a simple pricing structure that groups all sophisticated participants together is advantageous to all Members of BATS Options. As stated above, the Exchange operates within a highly competitive market. The Exchange, however, does not assess ongoing fess [sic] for BATS Options market data or fees related to order cancellation. Professional accounts, while otherwise considered to be Customers by virtue of not being broker-dealers, generally engage in trading activity more similar to broker-dealer proprietary trading accounts (more than 390 orders per day on average). This level of trading activity draws on a greater amount of Exchange system resources than that of non-Professional Customers. Simply, the more orders submitted to the Exchange, the more messages sent to and received from the Exchange, and the more Exchange system resources utilized. This level of trading activity by Professional accounts results in greater ongoing operational costs to the Exchange. As such, the Exchange aims to recover its costs by assessing Professional accounts the same fees that it assesses to other sophisticated Exchange market participants. Generally, competing options exchanges assess Professionals fees at rates more comparable to fees charged to broker-dealers. Sending

[6] Securities Exchange Act Release No. 65500 (October 6, 2011), 76 FR 63686 (October 13, 2011) (SR–BATS–2011–041).

[7] 15 U.S.C. 78f.

[8] 15 U.S.C. 78f(b)(4).

orders to and trading on the Exchange are entirely voluntary. Under these circumstances, Exchange transaction fees must be competitive to attract order flow, execute orders, and grow its market. As such, the Exchange believes its trading fees proposed for Professional accounts are fair and reasonable. While Professional orders will be assessed comparably higher transaction fees than those assessed to other Customer orders, as proposed, because Professional orders will be treated in the same manner as Firm and Market Maker orders, Professional orders will have the ability to achieve a higher rebate of $0.32 per contract when executing against other Firm, Market Maker or Professional orders (as compared to a $0.30 per contract rebate that a Customer order would receive).[9] The Exchange also notes that Professional orders will still qualify for additional rebates under existing programs such as the Exchange's Quoting Incentive and NBBO Setter Programs.

Moreover, the Exchange believes it is equitable and not unfairly discriminatory to charge Customers lower fees than fees charged to Professional accounts, which are more akin to broker-dealer accounts. The securities markets generally, and the Exchange in particular, have historically aimed to improve markets for investors and develop various features within the market structure for customer benefit. As such, the Exchange believes the proposed fees for Professional accounts, as compared to Customer transaction fees, is appropriate and not unfairly discriminatory.

Finally, the Exchange believes that the proposed change to charge the same fee for routing Professional customer orders to various markets as is charged for Firm and Market Maker orders is reasonable, equitable, and not unfairly discriminatory in that the fee will allow the Exchange to recoup its costs attendant with offering optional routing services. The Exchange incurs various costs related to providing routing services. In order to better recover those related costs and to potentially generate additional revenue, the Exchange proposes a routing fee to provide this optional service to Professional accounts. The Exchange also notes that although routing is available to Exchange participants for customer orders, including Professionals, Exchange participants are not required to use the routing services. Rather, Exchange routing services are completely optional. Exchange participants can manage their own routing to different options exchanges or can utilize a myriad of other routing solutions that are available to market participants. Further, as noted above, the characteristics of Professional accounts tend to be more similar to broker-dealers than to non-Professional Customers. As such, the Exchange believes Professionals are more likely to be able to directly route their orders to the exchange venues where they wish to trade. By assessing a fee on Professional accounts for routing orders, the Exchange aims to recover its costs in providing this optional service to its Participants and their Professional customer accounts. The Exchange believes that providing Customers a preferred rate for routing is consistent with the long history in the options markets of such customers being given preferred fees.

Additionally, the Exchange believes that the proposed modification to the Quoting Incentive Program, which is similar to a fee structure in place on at least one of the Exchange's competitors,[10] will further incentivize the provision of competitively priced, sustained liquidity that will create tighter spreads, benefitting both Members and public investors. The Exchange also believes that continuing to maintain a slightly lower threshold for meeting the QIP for registered BATS Options Market Makers appropriately incentivizes Members of BATS Options to register with the Exchange as Options Market Makers. While the Exchange does wish to allow participation in the QIP by all Members, the Exchange believes that registration by additional Members as Market Makers will help to continue to increase the breadth and depth of quotations available on the Exchange. The Exchange notes that in addition to the fact that the QIP will be available to all Members, the proposal is not unfairly discriminatory despite a slightly higher quotation requirement for non-Market Makers due to the fact that registration as a BATS Options Market Maker is equally available to all Members.

B. Self-Regulatory Organization's Statement on Burden on Competition

The Exchange does not believe that the proposed rule change imposes any burden on competition.

C. Self-Regulatory Organization's Statement on Comments on the Proposed Rule Change Received From Members, Participants or Others

No written comments were solicited or received.

III. Date of Effectiveness of the Proposed Rule Change and Timing for Commission Action

Pursuant to Section 19(b)(3)(A)(ii) of the Act[11] and Rule 19b–4(f)(2) thereunder,[12] the Exchange has designated this proposal as establishing or changing a due, fee, or other charge applicable to the Exchange's Members and non-members, which renders the proposed rule change effective upon filing.

At any time within 60 days of the filing of the proposed rule change, the Commission summarily may temporarily suspend such rule change if it appears to the Commission that such action is necessary or appropriate in the public interest, for the protection of investors, or otherwise in furtherance of the purposes of the Act.

IV. Solicitation of Comments

Interested persons are invited to submit written data, views and arguments concerning the foregoing, including whether the proposed rule change is consistent with the Act. Comments may be submitted by any of the following methods:

Electronic Comments

- Use the Commission's Internet comment form (*http://www.sec.gov/rules/sro.shtml*); or
- Send an email to *rule-comments@sec.gov.* Please include File Number SR–BATS–2011–046 on the subject line.

Paper Comments

- Send paper comments in triplicate to Elizabeth M. Murphy, Secretary, Securities and Exchange Commission, 100 F Street NE., Washington, DC 20549–1090.

All submissions should refer to File Number SR–BATS–2011–046. This file number should be included on the subject line if email is used. To help the Commission process and review your comments more efficiently, please use only one method. The Commission will

[9] The Exchange notes that when executing against a Customer order, a Professional order will receive a liquidity rebate of $0.22 per contract. This is the same liquidity rebate provided to Firm and Market Maker orders that execute against Customer orders today.

[10] *See* Securities Exchange Act Release No. 61869 (April 7, 2010), 75 FR 19449 (April 14, 2010) (SR–ISE–2010–25) (notice of filing and immediate effectiveness of changes to fees and rebates including adoption of specific rebates for market makers qualifying for the Market Maker Plus program).

[11] 15 U.S.C. 78s(b)(3)(A)(ii).

[12] 17 CFR 240.19b–4(f)(2).

post all comments on the Commission's Internet Web site (*http://www.sec.gov/rules/sro/shtml*). Copies of the submission, all subsequent amendments, all written statements with respect to the proposed rule change that are filed with the Commission, and all written communications relating to the proposed rule change between the Commission and any person, other than those that may be withheld from the public in accordance with the provisions of 5 U.S.C. 552, will be available for Web site viewing and printing in the Commission's Public Reference Room, 100 F Street NE., Washington, DC 20549, on official business days between the hours of 10 a.m. and 3 p.m. Copies of such filing will also be available for inspection and copying at the principal office of the Exchange. All comments received will be posted without change; the Commission does not edit personal identifying information from submissions. You should submit only information that you wish to make available publicly. All submissions should refer to File No. SR–BATS–2011–046 and should be submitted on or before December 1, 2011.

For the Commission, by the Division of Trading and Markets, pursuant to delegated authority.[13]

Kevin M. O'Neill,

Deputy Secretary.

[FR Doc. 2011–29113 Filed 11–9–11; 8:45 am]

BILLING CODE 8011–01–P

SECURITIES AND EXCHANGE COMMISSION

[Release No. 34–65692; File No. SR–FINRA–2011–063]

Self-Regulatory Organizations; Financial Industry Regulatory Authority, Inc.; Notice of Filing of Proposed Rule Change Relating to Amendments to the Order Audit Trail System Rules

November 4, 2011.

Pursuant to Section 19(b)(1) of the Securities Exchange Act of 1934 (''Act'')[1] and Rule 19b–4 thereunder,[2] notice is hereby given that on October 28, 2011, Financial Industry Regulatory Authority, Inc. (''FINRA'') filed with the Securities and Exchange Commission (''SEC'' or ''Commission'') the proposed rule change as described in Items I, II, and III below, which Items have been prepared by FINRA. The Commission is publishing this notice to solicit comments on the proposed rule change from interested persons.

I. Self-Regulatory Organization's Statement of the Terms of Substance of the Proposed Rule Change

FINRA is proposing to amend (i) Rules 5320 and 7440 to require that members report to the Order Audit Trail System (''OATS'') information barriers put into place by the member in reliance on Supplementary Material .02 to Rule 5320; (ii) Rule 7440 to require that members report customer instructions regarding the display of a customer's limit order in any OATS-eligible security; and (iii) Rule 7450 to codify the specific time OATS reports must be transmitted to FINRA.

The text of the proposed rule change is available on FINRA's Web site at *http://www.finra.org,* at the principal office of FINRA and at the Commission's Public Reference Room.

II. Self-Regulatory Organization's Statement of the Purpose of, and Statutory Basis for, the Proposed Rule Change

In its filing with the Commission, FINRA included statements concerning the purpose of and basis for the proposed rule change and discussed any comments it received on the proposed rule change. The text of these statements may be examined at the places specified in Item IV below. FINRA has prepared summaries, set forth in sections A, B, and C below, of the most significant aspects of such statements.

A. Self-Regulatory Organization's Statement of the Purpose of, and Statutory Basis for, Proposed Rule Change

1. Purpose

FINRA is proposing two changes to the order recording requirements in Rule 7440 of the OATS rules to reflect two recent amendments to other FINRA rules. First, the proposed rule change requires members relying on the ''No-Knowledge Exception'' in Supplementary Material .02 to Rule 5320 (Prohibition Against Trading Ahead of Customer Orders) to report information to OATS regarding the information barriers adopted by the member in reliance on the exception. The proposed rule change also adds this requirement into Supplementary Material .02 of Rule 5320. Second, the proposed rule change extends the existing requirement to reflect on OATS reports a customer's instruction regarding display of the customer's limit orders. The requirement currently applies only to limit orders involving NMS stocks; the proposed rule change extends the requirement to all OATS-eligible securities.

FINRA is also proposing amendments to Rule 7450 to codify the specific time by which OATS reports must be transmitted to FINRA.

(1) Customer Order Protection

First, FINRA is proposing to require members to identify on OATS reports information barriers that the member has in place in reliance on the No-Knowledge Exception in Supplementary Material .02 to Rule 5320.

On February 11, 2011, the SEC approved FINRA's proposed rule change to consolidate NASD Rule 2111 and IM–2110–2 into new FINRA Rule 5320.[3] Under Rule 5320, a member that accepts and holds an order in an equity security from its own customer, or a customer of another broker-dealer, without immediately executing the order is prohibited from trading that security on the same side of the market for its own proprietary account at a price that would satisfy the customer order unless the member immediately thereafter executes the customer order up to the size and at the same, or better, price at which the member traded for its proprietary account. The No-Knowledge Exception in Supplementary Material .02 to Rule 5320 provides that if a firm implements and uses an effective system of internal controls—such as appropriate information barriers—that operate to prevent one trading unit from obtaining knowledge of customer orders held by a separate trading unit, those other trading units may trade in a proprietary capacity at prices that would satisfy the customer orders held by the separate, walled-off trading unit.[4]

When FINRA originally proposed Rule 5320, members claiming the No-Knowledge Exception would have been required to assign and use a unique market participant identifier (''MPID'') for any walled-off market-making desk.[5] In response to commenters' concerns with the proposed MPID requirement, FINRA amended the proposal to delete the unique MPID requirement, but stated that it intended to examine alternative means of achieving the same regulatory objective of being able to

[13] 17 CFR 200.30–3(a)(12).

[1] 15 U.S.C. 78s(b)(1).

[2] 17 CFR 240.19b–4.

[3] *See* Securities Exchange Act Release No. 63895 (February 11, 2011), 76 FR 9386 (February 17, 2011).

[4] The Commission notes that the No-Knowledge Exception in Supplementary Material .02 to FINRA Rule 5320 contains different procedures for OTC equity securities.

[5] *See* Securities Exchange Act Release No. 61168 (December 15, 2009), 74 FR 68084 (December 22, 2009).

determine on an automated basis those customer orders that are received from walled-off desks.[6] The proposed rule change accomplishes the objective by adding provisions to the No-Knowledge Exception and to Rule 7440 that require firms relying on the exception to identify the information barriers to FINRA in their OATS reports.[7]

Through the use of OATS, FINRA will be able to ascertain, on an automated basis, those firms claiming the No-Knowledge Exception. This will reduce the potential for ''false positive'' alerts by allowing FINRA to account for the existence of information barriers when running automated surveillance patterns designed to identify inappropriate trading ahead of customer orders. FINRA believes that the new requirements will substantially reduce the number of ''false positives'' that are identified through automated surveillance patterns by being able to account for information barriers when trading ahead may otherwise be indicated.

(2) Limit Order Display

Rule 7440(b)(14) requires OATS Reporting Members to identify ''any request by a customer that an order not be displayed, or that a block size order be displayed, pursuant to Rule 604(b) of SEC Regulation NMS.'' [8] These customer requests are identified in the OATS system through a ''Customer Instruction Flag'' that indicates whether the customer has requested that the firm handle its limit order in a specified way. Because of the reference in Rule 7440(b)(14) to SEC Regulation NMS, members are only required to populate the Customer Instruction Flag when the order involves a security subject to SEC Regulation NMS.

On June 22, 2010, the Commission approved Rule 6460,[9] which became effective on May 9, 2011.[10] Rule 6460 generally requires OTC market makers to display a customer limit order in an OTC equity security held by the OTC market maker that is at a price that would improve the bid or offer of such OTC market maker in such security or that would represent more than a de minimis change in relation to the size associated with the OTC market maker's bid or offer. Rule 6460(b) includes exceptions to the display requirement for OTC equity securities that mirror the exceptions in Rule 604(b) of SEC Regulation NMS.[11]

FINRA is proposing to require that OATS Reporting Members indicate on all OATS reports for customer limit orders, including OTC equity securities, whether the customer has instructed the member not to display the limit order or to display a limit order of block size. As a result, OATS Reporting Members would be required to populate the Customer Instruction Flag for all limit orders, not just those involving NMS stocks. Use of the Customer Instruction Flag for all limit orders reported to OATS will notify FINRA that a customer has requested display of a limit order that would not otherwise be required to be displayed under applicable rules as well as avoid potential ''false positives'' generated by customer limit orders that are not being displayed due to the customer's request.

(3) Order Data Transmission Requirements

Rule 7450 requires members to report order information recorded pursuant to Rule 7440. Paragraph (a) of the rule imposes the general requirement that members report applicable order information to FINRA that the member is required to record by Rule 7440. Paragraph (b) of the rule addresses the form the order data must take and the timing of order reports. Paragraph (c) concerns the use of reporting agent agreements that a member may use to allow a third party to report information to OATS on behalf of the member. The proposed rule change amends paragraph (b) of Rule 7450 to codify the specific time OATS reports must be transmitted to FINRA, which is the same time that currently is required under the *OATS Reporting Technical Specifications,* as described in more detail below.

Rule 7450(b) provides that, generally, reports should be transmitted on the day of the order event unless information is not available.[12] In addition, if the member aggregates information, the information must be transmitted ''during such business hours as may be prescribed by FINRA.''

The proposed rule change would update the language in the rule, which has not been changed substantially since it was adopted in 1998, and codify a specific deadline that members must meet. When the rule language was adopted, and before OATS reporting was implemented in 1999, the rule language acknowledged that firms could choose to report OATS data to FINRA on a rolling basis throughout the day, or reports could be aggregated into one or more transmissions and submitted ''during such business hours as may be prescribed by [FINRA].'' This rule language further reflected the fact that, at the time the rules were proposed, issues involving the capacity of OATS and technological changes could affect the manner and timing of transmitting order information to OATS. In its initial filing with the Commission, FINRA noted:

> Based on further development of the Order Audit System and determinations relating to system capacity and other factors, NASDR will prescribe the hours during which information may be transmitted. The prescribed hours likely will extend past the end of the trading day. The proposal contemplates that all Order information, along with corresponding ACT data that has been integrated with such information, will be available to NASDR staff at the beginning of the trading day following the day on which the information has been transmitted.[13]

FINRA (then NASDR) began testing the capabilities of its systems in August 1998 in anticipation of the implementation of Phase One of OATS in early 1999.[14] In the November 30,

[6] *See* Securities Exchange Act Release No. 63895 (February 11, 2011), 76 FR 9386 (February 17, 2011).

[7] Members are permitted to report this information to OATS on a voluntary basis. *See OATS Reporting Technical Specifications,* at iii (ed. May 3, 2011); *see also* OATS for all NMS Stocks Frequently Asked Questions, Question 12, available at www.finra.org/oats. FINRA has encouraged members to do so to avoid ''false positive'' results that can be caused by automated surveillance patterns aggregating trading data without regard to information barriers that firms have put in place pursuant to the No-Knowledge Exception. *See Regulatory Notice* 11–24, n.12 (May 2011). The proposed rule change would make reporting of the information mandatory for those members relying on the No-Knowledge Exception.

[8] Rule 604 of SEC Regulation NMS generally requires OTC market makers in NMS stocks to display customer limit orders that would improve the market maker's published bid or offer (either by price or size). *See* 17 CFR 242.604(a)(2). Rule 604(b)(2) of SEC Regulation NMS excepts from the display requirement any customer limit order that is placed by a customer who expressly requests that the order not be displayed. *See* 17 CFR 242.604(b)(2). Rule 604(b)(4) of SEC Regulation NMS excepts from the display requirement any customer limit order of block size unless the customer requests that the order be displayed. *See* 17 CFR 242.604(b)(4).

[9] *See* Securities Exchange Act Release No. 62359 (June 22, 2010), 75 FR 37488 (June 29, 2010).

[10] *See Regulatory Notice* 10–42 (September 2010).

[11] *See* FINRA Rule 6460(b)(2), (b)(4).

[12] FINRA announced that OATS reports would be marked late if submitted after 8 a.m. Eastern Time on the calendar day following the OATS Business Day on which the order event occurred in the May 3, 2011 edition of the *OATS Reporting Technical Specifications. See OATS Reporting Technical Specifications,* at 8–1 (ed. May 3, 2011). Previously, OATS reports were marked late if received after 5 a.m. Eastern Time. *See OATS Reporting Technical Specifications,* at 8–1 (ed. November 8, 2010); Letter from Brant Brown, Associate General Counsel, FINRA, to Elizabeth Murphy, Secretary, SEC (October 28, 2010) relating to SR–FINRA–2010–044.

[13] *See* Securities Exchange Act Release No. 38990 (August 28, 1997), 62 FR 47096, 47103 (September 5, 1997) (Notice of Filing of Proposed Rule Change SR–NASD–97–56).

[14] *See* SR–NASD–97–56, Amendment No. 4; NASD *Special Notice to Members* 98–33 (March 1998).

1998 version of the *OATS Reporting Technical Specifications,* FINRA prescribed that, for purposes of OATS reporting, an OATS business day would begin after the close of the Nasdaq Stock Market on one market day (4:00:01 p.m. Eastern Time) and end with the close of the Nasdaq Stock Market on the next market day (4:00:00 p.m. Eastern Time). Orders received during an OATS business day would be required to be submitted to OATS by 4:00:00 a.m. Eastern Time the following calendar day.[15] This was intended to provide firms with adequate time to aggregate data files and transmit them to FINRA before the beginning of the next trading day.

FINRA is proposing to replace the current rule language regarding the timing of OATS transmissions to FINRA with a specific requirement. Under the proposed rule, all order events that occur on a particular OATS Business Day must be transmitted to FINRA by 8:00 a.m. Eastern Time on the calendar day following the end of the OATS Business Day. For purposes of the rule, an ''OATS Business Day'' begins at 4:00:01 p.m. Eastern Time on one market day and ends at 4:00:00 p.m. Eastern Time on the next market day.[16] FINRA is retaining the exception for information that is not available by the time the report must be transmitted; in such cases, the report must be transmitted on the day that the information becomes available.[17]

The effective date of the proposed rule change will be no later than 120 days after Commission approval.

2. Statutory Basis

FINRA believes that the proposed rule change is consistent with the provisions of Section 15A(b)(6) of the Act,[18] which requires, among other things, that FINRA rules must be designed to prevent fraudulent and manipulative acts and practices, to promote just and equitable principles of trade, and, in general, to protect investors and the public interest. FINRA believes that the proposed rule change will enhance FINRA's automated surveillance systems by providing customer instruction information relating to limit orders and significantly reducing the incidence of ''false positive'' results caused by identifying permitted trading activity in automated surveillance patterns. By reducing ''false positive'' results, FINRA can focus its resources on trading activity that has properly been identified as warranting further regulatory scrutiny, thus promoting just and equitable principles of trade and protecting investors and the public interest. FINRA also believes that codifying the time by which OATS reports must be submitted will promote just and equitable principles of trade by ensuring that all members are aware of their reporting obligations.

B. Self-Regulatory Organization's Statement on Burden on Competition

FINRA does not believe that the proposed rule change will result in any burden on competition that is not necessary or appropriate in furtherance of the purposes of the Act.

C. Self-Regulatory Organization's Statement on Comments on the Proposed Rule Change Received From Members, Participants or Others

Written comments were neither solicited nor received.

III. Date of Effectiveness of the Proposed Rule Change and Timing for Commission Action

Within 45 days of the date of publication of this notice in the **Federal Register** or within such longer period (i) as the Commission may designate up to 90 days of such date if it finds such longer period to be appropriate and publishes its reasons for so finding or (ii) as to which the self-regulatory organization consents, the Commission will:

(A) By order approve or disapprove such proposed rule change, or

(B) Institute proceedings to determine whether the proposed rule change should be disapproved.

IV. Solicitation of Comments

Interested persons are invited to submit written data, views, and arguments concerning the foregoing, including whether the proposed rule change is consistent with the Act. Comments may be submitted by any of the following methods:

Electronic Comments

- Use the Commission's Internet comment form (*http://www.sec.gov/rules/sro.shtml*); or
- Send an email to *rule-comments@sec.gov.* Please include File Number SR–FINRA–2011–063 on the subject line.

Paper Comments

- Send paper comments in triplicate to Elizabeth M. Murphy, Secretary, Securities and Exchange Commission, 100 F Street NE., Washington, DC 20549–1090.

All submissions should refer to File Number SR–FINRA–2011–063. This file number should be included on the subject line if email is used. To help the Commission process and review your comments more efficiently, please use only one method. The Commission will post all comments on the Commission's Internet Web site (*http://www.sec.gov/rules/sro.shtml*). Copies of the submission, all subsequent amendments, all written statements with respect to the proposed rule change that are filed with the Commission, and all written communications relating to the proposed rule change between the Commission and any person, other than those that may be withheld from the public in accordance with the provisions of 5 U.S.C. 552, will be available for Web site viewing and printing in the Commission's Public Reference Room, 100 F Street NE., Washington, DC 20549, on official business days between the hours of 10 a.m. and 3 p.m. Copies of such filing also will be available for inspection and copying at the principal office of FINRA. All comments received will be posted without change; the Commission does not edit personal identifying information from submissions. You should submit only information that you wish to make available publicly. All submissions should refer to File Number SR–FINRA–2011–063 and should be submitted on or before December 1, 2011.

[15] *See* NASD *Notice to Members* 99–04 (January 1999). FINRA extended the time from 4:00 a.m. Eastern Time to 5:00 a.m. Eastern Time in 2007 connection with the expansion of OATS to OTC equity securities. *See* August 21, 2007 Addendum to *OATS Reporting Technical Specifications* (ed. August 6, 2007).

[16] Thus, for example, assuming no holidays, if an order is received at 5:00:00 p.m. Eastern Time on Wednesday, the order event occurs on the OATS Business Day ending Thursday at 4:00:00 p.m. Eastern Time. Receipt of the order (and any subsequent event(s) regarding the order until Thursday at 4:00:00 p.m. Eastern Time) must be reported by 8:00:00 a.m. on Friday. Order events occurring on market days during regular market hours (*i.e.*, before 4:00:01 p.m. Eastern Time) are reported by 8:00:00 a.m. Eastern Time on the following calendar day.

[17] This provision was initially intended to address circumstances where complete information is not available at the time an order report must be submitted (for example, where an order is executed over the course of multiple days, and the total execution information is not available on the same day the order is received). *See* Securities Exchange Act Release No. 38990 (August 28, 1997), 62 FR 47096 (September 5, 1997). The provision was amended in 2006 to also address circumstances where a firm has traded a security that has not been assigned a symbol and can report the information only after a symbol has been requested, which must be done promptly, and assigned. *See* Securities Exchange Act Release No. 54585 (October 10, 2006), 71 FR 61112 (October 17, 2006); *Notice to Members* 06–70 (December 2006).

[18] 15 U.S.C. 78*o*–3(b)(6).

For the Commission, by the Division of Trading and Markets, pursuant to delegated authority.[19]

Kevin M. O'Neill,

Deputy Secretary.

[FR Doc. 2011–29112 Filed 11–9–11; 8:45 am]

BILLING CODE 8011–01–P

SECURITIES AND EXCHANGE COMMISSION

[Release No. 34–65690; File No. SR–CBOE–2011–103]

Self-Regulatory Organizations; Chicago Board Options Exchange, Incorporated; Notice of Filing and Immediate Effectiveness of a Proposed Rule Change To Clarify the Process for the Qualification of the Customer Large Trade Discount

November 4, 2011.

Pursuant to Section 19(b)(1) of the Securities Exchange Act of 1934 (the ''Act'')[1] and Rule 19b–4 thereunder,[2] notice is hereby given that on October 28, 2011, the Chicago Board Options Exchange, Incorporated (the ''Exchange'' or ''CBOE'') filed with the Securities and Exchange Commission (the ''Commission'') the proposed rule change as described in Items I, II, and III below, which Items have been prepared by the Exchange. The Commission is publishing this notice to solicit comments on the proposed rule change from interested persons.

I. Self-Regulatory Organization's Statement of the Terms of Substance of the Proposed Rule Change

The Exchange proposes to amend its Customer Large Trade Discount. The text of the proposed rule change is available on the Exchange's Web site (*http://www.cboe.org/legal*), at the Exchange's Office of the Secretary, and at the Commission.

II. Self-Regulatory Organization's Statement of the Purpose of, and Statutory Basis for, the Proposed Rule Change

In its filing with the Commission, the self-regulatory organization included statements concerning the purpose of and basis for the proposed rule change and discussed any comments it received on the proposed rule change. The text of those statements may be examined at the places specified in Item IV below. The Exchange has prepared summaries, set forth in sections A, B, and C below, of the most significant parts of such statements.

A. Self-Regulatory Organization's Statement of the Purpose of, and Statutory Basis for, the Proposed Rule Change

1. Purpose

The Exchange recently amended its Fees Schedule to clarify the process for the qualification of a customer order for the Customer Large Trade Discount (the ''Discount''), which is intended to cap fees on large customer trades (the quantity of contracts necessary for a large customer trade to qualify for the Discount varies by product).[3] The Exchange now proposes to amend the Fees Schedule once again to further clarify the process for qualification of a customer order for the Discount.

Currently, to qualify for the Discount, an entire customer order quantity must be tied to a single order ID either within the CBOEdirect system or in FBW or PULSe or in the front end system used to transmit the order (provided the Exchange is granted access to effectively audit such front end system). The order must be entered in its entirety on one system so that the Exchange can clearly identify the total size of the order.[4] There is a minor contradiction in the wording in regards to the entry of a customer order large enough to qualify for the Discount (a ''Large Customer Order'') entered into a front end system, which may be a non-CBOE system (a system used by a broker) that is used to enter orders. Under the current language, the entire order quantity must be tied to a single order ID within the front end system used to transmit the order. However, in the parenthetical that follows, the language states that the order must be entered in its entirety on one system; it does not state that the order has to be transmitted from that system. It has come to the Exchange's attention that some brokers receive Large Customer Orders from customers and enter those Large Customer Orders into their front end systems, but then telephone or otherwise transmit those orders to the CBOE trading floor. This process would qualify the Large Customer Order for the Discount under the parenthetical (since the Large Customer Order is entered in its entirety into the front end system), but technically would not qualify the Large Customer Order for the Discount under the previous sentence, since it is the telephone call, and not the front end system itself, that transmits that order to the Exchange.

The Exchange therefore proposes to eliminate this contradiction in the language by clarifying that, to qualify for the Discount, an entire customer order quantity must be tied to a single order ID within the front end system that is used to enter and/or transmit the order. This clarifies that, if a broker receives a Large Customer Order from a customer, enters it into their own front end system, and then telephones the order into the Exchange, the Large Customer Order will still qualify for the Discount. Any party that requests that an order entered in this process be granted the Discount will still have to grant the Exchange access to effectively audit the front end system, and will have to submit a customer large trade discount request which identifies all necessary trade-related information to the Exchange within 3 business days of the transactions.[5]

The proposed rule change would clear up any confusion regarding the entry and qualification of Large Customer Orders and thereby make it easier for brokers to ensure that their Large Customer Orders qualify for the Discount.

The proposed change is to take effect on November 1, 2011.

2. Statutory Basis

The proposed rule change is consistent with Section 6(b) of the Act,[6] in general, and furthers the objectives of Section 6(b)(5)[7] of the Act in particular, in that it is designed to remove impediments to and perfect the mechanism of a free and open market and a national market system, and, in general, to protect investors and the public interest. By clarifying the process for the qualification of Large Customer Orders for the Discount and eliminating a contradiction in the Fees Schedule language regarding such process, the proposed rule change eliminates confusion, thereby removing an impediment to and perfecting the mechanism of a free and open market system. The clarification of this process will also make it easier for CBOE to administer the Discount and ensure that it is appropriately assessed when it is applicable.

B. Self-Regulatory Organization's Statement on Burden on Competition

CBOE does not believe that the proposed rule change will impose any burden on competition not necessary or

[19] 17 CFR 200.30–3(a)(12).

[1] 15 U.S.C. 78s(b)(1).

[2] 17 CFR 240.19b–4.

[3] *See* Securities Exchange Act Release No. 65491 (October 6, 2011), 76 FR 63680 (October 13, 2011) (SR–CBOE–2011–093).

[4] *See* Exchange Fees Schedule, Section 18.

[5] *See* Note 4.

[6] 15 U.S.C. 78f(b).

[7] 15 U.S.C. 78f(b)(5).

appropriate in furtherance of the purposes of the Act.

C. Self-Regulatory Organization's Statement on Comments on the Proposed Rule Change Received From Members, Participants or Others

No written comments were solicited or received with respect to the proposed rule change.

III. Date of Effectiveness of the Proposed Rule Change and Timing for Commission Action

The proposed rule change is designated by the Exchange as establishing or changing a due, fee, or other charge, thereby qualifying for effectiveness on filing pursuant to Section 19(b)(3)(A) of the Act [8] and subparagraph (f)(2) of Rule 19b–4 [9] thereunder. At any time within 60 days of the filing of the proposed rule change, the Commission summarily may temporarily suspend such rule change if it appears to the Commission that such action is necessary or appropriate in the public interest, for the protection of investors, or otherwise in furtherance of the purposes of the Act.

IV. Solicitation of Comments

Interested persons are invited to submit written data, views and arguments concerning the foregoing, including whether the proposed rule change is consistent with the Act. Comments may be submitted by any of the following methods:

Electronic Comments

- Use the Commission's Internet comment form (*http://www.sec.gov/rules/sro.shtml*); or
- Send an email to *rule-comments@sec.gov.* Please include File Number SR–CBOE–2011–103 on the subject line.

Paper Comments

- Send paper comments in triplicate to Elizabeth M. Murphy, Secretary, Securities and Exchange Commission, 100 F Street NE., Washington, DC 20549–1090.

All submissions should refer to File Number SR–CBOE–2011–103. This file number should be included on the subject line if email is used. To help the Commission process and review your comments more efficiently, please use only one method. The Commission will post all comments on the Commission's Internet Web site (*http://www.sec.gov/rules/sro/shtml*). Copies of the submission, all subsequent amendments, all written statements with respect to the proposed rule change that are filed with the Commission, and all written communications relating to the proposed rule change between the Commission and any person, other than those that may be withheld from the public in accordance with the provisions of 5 U.S.C. 552, will be available for Web site viewing and printing in the Commission's Public Reference Room, 100 F Street NE., Washington, DC 20549, on official business days between the hours of 10:00 a.m. and 3:00 p.m. Copies of such filing will also be available for inspection and copying at the principal office of the Exchange. All comments received will be posted without change; the Commission does not edit personal identifying information from submissions. You should submit only information that you wish to make available publicly. All submissions should refer to File No. SR–CBOE–2011–103 and should be submitted on or before December 1, 2011.

For the Commission, by the Division of Trading and Markets, pursuant to delegated authority.[10]

Kevin M. O'Neill,

Deputy Secretary.

[FR Doc. 2011–29111 Filed 11–9–11; 8:45 am]

BILLING CODE 8011–01–P

[8] 15 U.S.C. 78s(b)(3)(A).

[9] 17 CFR 240.19b–4(f)(2).

[10] 17 CFR 200.30–3(a)(12).

SECURITIES AND EXCHANGE COMMISSION

[Release No. 34–65688; File No. SR–NASDAQ–2011–146]

Self-Regulatory Organizations; The NASDAQ Stock Market LLC; Notice of Filing of Proposed Rule Change To Modify Rule 7034 Regarding Low Latency Network Connections

November 4, 2011.

Pursuant to Section 19(b)(1) of the Securities Exchange Act of 1934 (''Act''),[1] and Rule 19b–4 [2] thereunder, notice is hereby given that on October 31, 2011, The NASDAQ Stock Market LLC (''NASDAQ'' or ''Exchange'') filed with the Securities and Exchange Commission (''SEC'' or ''Commission'') the proposed rule change as described in Items I, II, and III, below, which Items have been prepared by the Exchange. The Commission is publishing this notice to solicit comments on the proposed rule change from interested persons.

I. Self-Regulatory Organization's Statement of the Terms of Substance of the Proposed Rule Change

The Exchange, pursuant to Section 19(b)(1) of the Act [3] and Rule 19b–4 thereunder,[4] proposes to modify Exchange Rule 7034 entitled ''Co-Location Services'' to establish a program for offering low latency network connections and to establish the initial fees for such connections. The Exchange also proposes administrative modifications to Exchange Rule 7034.

The text of the proposed rule change is available on the Exchange's Web site at *http://www.nasdaq.cchwallstreet.com,* at the principal office of the Exchange, on the Commission's Web site at *http://www.sec.gov,* and at the Commission's Public Reference Room.

II. Self-Regulatory Organization's Statement of the Purpose of, and Statutory Basis for, the Proposed Rule Change

In its filing with the Commission, the Exchange included statements concerning the purpose of and basis for the proposed rule change and discussed any comments it received on the proposed rule change. The text of these statements may be examined at the places specified in Item IV below. The Exchange has prepared summaries, set forth in sections A, B, and C below, of the most significant aspects of such statements.

A. Self-Regulatory Organization's Statement of the Purpose of, and Statutory Basis for, the Proposed Rule Change

1. Purpose

Low Latency Network Connection Option

The purpose of the proposed rule change is to modify Exchange Rule 7034, which governs the Exchange's program for co-location services, to offer new options for low latency network telecommunication connections and to establish the initial fees for such connections. As its initial offering, the Exchange proposes to offer point-to-point telecommunication connectivity from the co-location facility to select major financial trading and co-location venues in the New York and New Jersey metropolitan areas, Toronto, and Chicago.

[1] 15 U.S.C. 78s(b)(1).

[2] 17 CFR 240.19b–4.

[3] 15 U.S.C. 78s(b)(1).

[4] 17 CFR 240.19b–4.

Background

Currently the Exchange provides a cross connect from a client's cabinet to its requested telecommunication carrier's cabinet (known as a ''telco cross connect''). Through the enhanced point-to-point connectivity service, clients will now have the option to receive low latency network connectivity from the Exchange's data center to the client's chosen venue(s), in addition to the telco cross connect. These connections can be utilized to send market data to and receive orders from the chosen venues.

The enhanced point-to-point connectivity provides the Exchange's co-location customers the opportunity to obtain low latency network connectivity with greater ease than is currently the case, and at a competitive price. Currently, co-location customers obtain similar services by negotiating fees, obtaining service level agreements, and executing service agreements directly with approved telecommunication carriers. A co-located customer is currently charged a monthly negotiated fee by the telecommunications carrier in addition to a cross connection fee by the Exchange. There are currently 16 approved telecommunication carriers with equipment in the Exchange's data center, with additional carriers added at the request of a client. In order to provide the new connectivity option described in this proposed rule change, the Exchange established a low-latency minimum standard,[5] approached those telecommunications carriers with low latency connections to select major financial trading and co-location venues in the New York and New Jersey metropolitan areas, Toronto, and Chicago that met the low-latency minimum standard,[6] and invited them to agree to discounted rates. In effect, the Exchange is obtaining wholesale rates from the carriers and then charging a markup to compensate it for its efforts to negotiate and establish the arrangement and integrate the connectivity into the Exchange co-location connectivity offering, as well as administrative costs associated with establishing and maintaining each new connection. Of the 16 approved telecommunication carriers with equipment in the Exchange's data center, one carrier has, to date, agreed to offer connections under the program and others are in negotiations with the Exchange; additional carriers are eligible to join the program upon meeting the same terms and conditions.

Under the program, co-located customers will have the opportunity to request these new low latency network telecommunication connections through the same process used to request a new co-located cabinet and other co-location services, with no need for direct fee negotiations or new service agreements with telecommunication carriers. The co-located customer will choose the connection destination,[7] but the elimination of direct negotiations and separate service agreements with the telecommunications provider for these services will allow them to obtain a similar service at a competitive price and with greater ease of implementation. In addition, the proposed low latency network connectivity fees include cross connections and eliminate a separate fee for that service.

The Exchange is making the low latency network telecommunication connections available as a convenience to customers and notes that receipt of these connections is completely voluntary. Customers retain the option of contracting directly with telecommunication providers, including either the provider(s) that participate in the program, the current providers in the data center who have not yet agreed to participate, or any new carrier that is approved to install equipment in the Exchange's data center.

Low Latency Pricing Structure

The Exchange proposes: (1) A one-time fee of $1,165 for the installation of 100 MB of telecommunication connectivity to select New York and New Jersey metropolitan area financial trading and co-location venues, which includes fiber telecommunication cross connects within the NASDAQ OMX data center, along with a per-month connectivity fee of $1,650; (2) a one-time fee of $2,150 for the installation of 1G of telecommunication connectivity to select New York and New Jersey metropolitan area financial trading and co-location venues, which includes fiber telecommunication cross connects within the NASDAQ OMX data center, along with a per-month connectivity fee of $2,150; (3) a one-time fee of $5,000 for the installation of 10G of telecommunication connectivity to select New York and New Jersey metropolitan area financial trading and co-location venues, which includes fiber telecommunication cross connects within the NASDAQ OMX data center, along with a per-month connectivity fee of $5,000; (4) a one-time fee of $5,150 for the installation of 100 MB of telecommunication connectivity to select Toronto area financial trading and co-location venues, which includes fiber telecommunication cross connects within the NASDAQ OMX data center, along with a per-month connectivity fee of $4,350; (5) a one-time fee of $8,200 for the installation of 1G of telecommunication connectivity to select Toronto area financial trading and co-location venues, which includes fiber telecommunication cross connects within the NASDAQ OMX data center, along with a per-month connectivity fee of $10,450; (6) a one-time fee of $15,150 for the installation of 10G of telecommunication connectivity to select Toronto area financial trading and co-location venues, which includes fiber telecommunication cross connects within the NASDAQ OMX data center, along with a per-month connectivity fee of $32,400; (7) a one-time fee of $4,850 for the installation of 100 MB of telecommunication connectivity to select Chicago area financial trading and co-location venues, which includes fiber telecommunication cross connects within the NASDAQ OMX data center, along with a per-month connectivity fee of $8,350; (8) a one-time fee of $5,900 for the installation of 1G of telecommunication connectivity to select Chicago area financial trading and co-location venues, which includes fiber telecommunication cross connects within the NASDAQ OMX data center, along with a per-month connectivity fee of $16,400; and (9) a one-time fee of $12,050 for the installation of 10G of telecommunication connectivity to select Chicago area financial trading and co-location venues, which includes fiber telecommunication cross connects within the NASDAQ OMX data center, along with a per-month connectivity fee of $39,750.

The fees are based on anticipated bandwidth necessary for the connections and distances to these select venues. Furthermore, the Exchange believes the fees are reasonable as they are similar and competitive with fees charged for similar services by other entities.[8]

[5] The low-latency minimum standard is less than or equal to 0.41 milliseconds for New York/New Jersey routes, less than or equal to 10.1 milliseconds for Toronto routes, and less than or equal to 17 milliseconds for Chicago routes. This standard will change as the technology improves and the latency is further reduced.

[6] The Exchange selected these locations because of the high numbers of member firms and/or liquidity venues located there.

[7] As additional providers join the program, customers will also have the opportunity to choose from among these providers.

[8] *See http://www.cmegroup.com/globex/files/CMEGlobexConnectionAgrmt.pdf; http://nysetechnologies.nyx.com/global-connectivity/sfti-americas/sfti-ip-americas; http://*

Elimination of Obsolete Rule Language Concerning Waiver of Fees

The Exchange also proposes to eliminate references to certain fee waivers that expired July 31, 2011.[9] Since the fee waivers expired, such language is no longer necessary.

2. Statutory Basis

The Exchange believes that its proposal is consistent with Section 6(b) of the Act [10] in general, and Sections 6(b)(4) and (b)(5) of the Act [11] in particular, in that it provides for the equitable allocation of reasonable dues, fees and other charges among members and issuers and other persons using any facility or system which the Exchange operates or controls, and is designed to promote just and equitable principles of trade, to remove impediments to and perfect the mechanism of a free and open market and a national market system, and, in general to protect investors and the public interest. The proposal is designed to provide a method of connectivity between the Exchange's co-location facility and various remote locations. Currently, market participants obtain such connections by negotiating directly with telecommunication providers. Through its efforts to negotiate standard wholesale rates with providers, the Exchange seeks to offer market participants an opportunity to obtain the same connectivity service at a potentially lower cost and with greater ease of implementation. The Exchange believes that this change will be unambiguously beneficial to market participants, who will retain all current options for obtaining connectivity through direct negotiations with telecommunications providers, while also receiving a new option for obtaining the service through the Exchange's program.

The proposed fees for the service cover the costs charged to the Exchange by telecommunication provider(s). The fees charged to the Exchange are based on anticipated bandwidth necessary for the connections and distances to the available locations covered by the service (New York/New Jersey, Chicago, and Toronto). The proposed fees also include a markup to allow the Exchange to cover its administrative costs and to earn a profit on its provision of the service. The Exchange believes that it is reasonable to use fees assessed on this basis as a means to recoup NASDAQ's share of the costs associated with the proposed low latency network telecommunication connections, provide a convenience for the customers, and to the extent the costs are covered, provide the Exchange a profit. The Exchange further believes that the proposed fees are reasonable in light of the costs associated with the service and the fees charged by other trading venues for comparable services.[12]

The proposed co-location services are entirely voluntary and available to all members, with uniform fees charged to all market participants that opt to obtain connectivity through the Exchange. Moreover, market participants may choose to obtain services through the Exchange, or may choose to negotiate their own connectivity with 16 different providers. Accordingly, the Exchange's proposed fees are non-discriminatory, and equitably allocated to market participants that choose to avail themselves of the Exchange's services, rather than obtaining comparable services directly.

B. Self-Regulatory Organization's Statement on Burden on Competition

The Exchange does not believe that the proposed rule change will impose any burden on competition not necessary or appropriate in furtherance of the purposes of the Act. First, competition between the Exchange and competing trading venues will be enhanced by allowing the Exchange to offer its market participants connectivity to its data center at a potentially lower price, and with greater ease. As noted above, NYSE already offers comparable services, at comparable fees, to its market participants. Accordingly, the proposal will allow the Exchange to enhance its competitive standing vis-à-vis other trading venues. Conversely, any delay in the effectiveness of the proposed rule change would burden competition by preventing the Exchange from mounting a response to a primary competitor. Second, competition among market participants will be supported by allowing small and large participants to pay a lower price for data center connectivity.

The Exchange believes that the proposed rule change will likewise enhance competition among telecommunications providers that seek to offer connections between market participants and the Exchange's data center. As discussed above, the Exchange does not discriminate among telecommunication providers, but rather allows providers to access the data center upon request of a market participant. As a result, 16 providers are currently connected. Likewise, the Exchange does not discriminate among providers with respect to eligibility to offer connectivity through the Exchange under the service proposed in this filing, provided the latency, destinations, and fees offered by the provider are consistent with the minimum standards established by the Exchange. Thus, telecommunications providers can choose to participate in the program, or can choose to service market participants exclusively through direct negotiations with customers. The Exchange's approach is consistent with its own economic incentives to facilitate as many market participants as possible in connecting to its market. Burdening competition among telecommunications providers would be antithetical to the Exchange's own competitive interests, since impaired competition would make it more expensive and more difficult for market participants to send order flow to the Exchange.

The Exchange expects that the result of the proposal will be a reduction in fees charged to market participants, the very essence of competition. To the extent that fees under the program are less expensive than the rates currently paid by many market participants, the welfare of these market participants will increase, and other telecommunications providers will be incentivized to lower their own rates. This will, in turn, facilitate the introduction of greater volumes of order flow to the Exchange.

C. Self-Regulatory Organization's Statement on Comments on the Proposed Rule Change Received From Members, Participants, or Others

No written comments were either solicited or received.

III. Date of Effectiveness of the Proposed Rule Change and Timing for Commission Action

Within 45 days of the date of publication of this notice in the **Federal Register** or within such longer period (i) as the Commission may designate up to 90 days of such date if it finds such longer period to be appropriate and publishes its reasons for so finding or (ii) as to which the Exchange consents, the Commission shall: (a) By order approve or disapprove such proposed rule change, or (b) institute proceedings

nysetechnologies.nyx.com/sites/technologies.nyx.com/files/SFTI_Americas_Market_Connectivity.pdf; http://nysetechnologies.nyx.com/global-connectivity/sfti-americas.

[9] *See* Securities Exchange Act Release No. 64630 (June 8, 2011), 76 FR 34783 (June 14, 2011) (SR–NASDAQ–2011–074); and Securities Exchange Act Release No. 64858 (July 12, 2011), 76 FR 42152 (July 18, 2011) (SR–NASDAQ–2011–094).

[10] 15 U.S.C. 78f(b).

[11] 15 U.S.C. 78f(b)(4) and (5).

[12] *See supra* n. 8.

to determine whether the proposed rule change should be disapproved.

IV. Solicitation of Comments

Interested persons are invited to submit written data, views, and arguments concerning the foregoing, including whether the proposed rule change is consistent with the Act. Comments may be submitted by any of the following methods:

Electronic Comments

- Use the Commission's Internet comment form (*http://www.sec.gov/rules/sro.shtml);* or
- Send an email to *rule-comments@sec.gov.* Please include File Number SR–NASDAQ–2011–146 on the subject line.

Paper Comments

- Send paper comments in triplicate to Elizabeth M. Murphy, Secretary, Securities and Exchange Commission, 100 F Street NE., Washington, DC 20549–1090.

All submissions should refer to File Number SR–NASDAQ–2011–146. This file number should be included on the subject line if email is used. To help the Commission process and review your comments more efficiently, please use only one method. The Commission will post all comments on the Commission's Internet Web site (*http://www.sec.gov/rules/sro.shtml*). Copies of the submission, all subsequent amendments, all written statements with respect to the proposed rule change that are filed with the Commission, and all written communications relating to the proposed rule change between the Commission and any person, other than those that may be withheld from the public in accordance with the provisions of 5 U.S.C. 552, will be available for Web site viewing and printing in the Commission's Public Reference Room, 100 F Street NE., Washington, DC 20549, on official business days between the hours of 10 a.m. and 3 p.m. Copies of such filing also will be available for inspection and copying at the principal office of the Exchange. All comments received will be posted without change; the Commission does not edit personal identifying information from submissions. You should submit only information that you wish to make available publicly. All submissions should refer to File Number SR–NASDAQ–2011–146 and should be submitted on or before December 1, 2011.

For the Commission, by the Division of Trading and Markets, pursuant to delegated authority.[13]

Kevin M. O'Neill,

Deputy Secretary.

[FR Doc. 2011–29109 Filed 11–9–11; 8:45 am]

BILLING CODE 8011–01–P

SECURITIES AND EXCHANGE COMMISSION

[Release No. 34–65685; File No. SR–EDGA–2011–36]

Self-Regulatory Organizations; EDGA Exchange, Inc.; Notice of Filing and Immediate Effectiveness of Proposed Rule Change Relating to Amendments to the EDGA Exchange, Inc. Fee Schedule

November 4, 2011.

Pursuant to Section 19(b)(1) of the Securities Exchange Act of 1934 (the ''Act''),[1] and Rule 19b–4 thereunder,[2] notice is hereby given that on October 31, 2011, the EDGA Exchange, Inc. (the ''Exchange'' or the ''EDGA'') filed with the Securities and Exchange Commission (''Commission'') the proposed rule change as described in Items I, II, and III below, which items have been prepared by the self-regulatory organization. The Commission is publishing this notice to solicit comments on the proposed rule change from interested persons.

I. Self-Regulatory Organization's Statement of the Terms of Substance of the Proposed Rule Change

The Exchange proposes to amend its fees and rebates applicable to Members[3] of the Exchange pursuant to EDGA Rule 15.1(a) and (c). All of the changes described herein are applicable to EDGA Members. The text of the proposed rule change is available on the Exchange's Internet Web site at *http://www.directedge.com.*

II. Self-Regulatory Organization's Statement of the Purpose of, and Statutory Basis for, the Proposed Rule Change

In its filing with the Commission, the self-regulatory organization included statements concerning the purpose of, and basis for, the proposed rule change and discussed any comments it received on the proposed rule change. The text of these statements may be examined at the places specified in Item IV below. The self-regulatory organization has prepared summaries, set forth in sections A, B and C below, of the most significant aspects of such statements.

A. Self-Regulatory Organization's Statement of the Purpose of, and Statutory Basis for, the Proposed Rule Change

Purpose

The Exchange proposes to increase its charge for customer internalization on Flag 5 from $0.0001 per share, per side, to $0.00015 per share per side, to move in lockstep with the proposed maker/taker fee spread of $0.0003, which was implemented in the October 1, 2011 fee schedule, where the Exchange decreased its rebate from $0.0005 per share to $0.0004 per share for adding liquidity and increased its charge from $0.0006 per share to $0.0007 per share for removing liquidity. The increase in the charge for Flag 5 corresponds to the Exchange's increase in its charge for customer internalization in Flag E from $0.0001 per share, per side (prior to October 1, 2011) to $0.00015 per share per side on October 1, 2011.

The Exchange proposes to add a new tier that provides if a Member, on a daily basis, measured monthly, posts more than 0.25% of the Total Consolidated Volume[4] (''TCV'') in average daily volume and removes more than 0.25% of TCV in average daily volume, then the Member will receive a rebate of $0.0005 per share. This amendment is reflected in the language in footnote 4 of the Exchange's fee schedule. The new tier will also apply to Flags B, V, Y, 3 and 4, as these flags have a footnote 4 appended to them.

The Exchange also proposes to decrease the charge assessed for a Directed Intermarket Sweep Order[5] (''Directed ISO'') from $0.0033 per share to $0.0032 per share, which is reflected in Flag S of the Exchange's fee schedule.

The Exchange proposes to implement these amendments to its fee schedule on November 1, 2011.

Basis

The Exchange believes that the proposed rule change is consistent with the objectives of Section 6 of the Exchange Act,[6] in general, and furthers the objectives of Section 6(b)(4),[7] in particular, as it is designed to provide

---

[13] 17 CFR 200.30–3(a)(12).

[1] 15 U.S.C. 78s(b)(1).

[2] 17 CFR 240.19b–4.

[3] A Member is any registered broker or dealer, or any person associated with a registered broker or dealer, that has been admitted to membership in the Exchange.

[4] TCV is defined as volume reported by all exchanges and trade reporting facilities to the consolidated transaction reporting plans for Tapes A, B and C securities for the month prior to the month in which the fees are calculated.

[5] *See* Exchange Rule 11.5(d)(2).

[6] 15 U.S.C. 78f.

[7] 15 U.S.C. 78f(b)(4).

for the equitable allocation of reasonable dues, fees and other charges among its members and other persons using its facilities.

The Exchange proposes to increase its charge for customer internalization in Flag 5 from $0.0001 per share, per side, to $0.00015 per share per side. This increase will enable the charge on Flag 5 to move in lockstep with the Exchange's October 1, 2011 decrease in its rebate from $0.0005 per share to $0.0004 per share for adding liquidity and increase in its charge from $0.0006 to $0.0007 per share for removing liquidity. The latter amendments to the Exchange's fee schedule were designed to allow the Exchange to compete with other market centers.[8] In addition, the increase in the charge for Flag 5 corresponds to the Exchange's increase in its charge for customer internalization in Flag E from $0.0001 per share, per side, to $0.00015 per share per side on its October 1, 2011, fee schedule. The increased revenue to the Exchange from the rate increase would allow the Exchange to have additional revenue to offset administrative and infrastructure costs. The Exchange believes that the proposed rate is non-discriminatory in that it applies uniformly to all Members.

The Exchange's proposal to amend its fee schedule to create a tier to provide an increased rebate of $0.0005 per share if Members post more than 0.25% of the TCV in average daily volume and remove more than 0.25% of TCV in average daily volume is designed to incentivize Members to both add and remove liquidity from EDGA.

The potential increase in volume from the new tier benefits all investors by deepening EDGA's liquidity pool, supporting the quality of price discovery, promoting market transparency and improving investor protection. Volume-based discounts such as the rebate proposed herein have been widely adopted in the cash equities markets and provide discounts that are reasonably related to the value to an exchange's market quality associated with higher levels of market activity, such as higher levels of liquidity provision and introduction of higher volumes of orders into the price and volume discovery processes. Such increased volume increases potential revenue to the Exchange, and would allow the Exchange to spread its administrative and infrastructure costs over a greater number of shares, leading to lower per share costs. These lower per share costs would allow the Exchange to pass on the savings to Members in the form of a rebate of $0.0005 per share. The Exchange believes that the proposed rebate is nondiscriminatory in that it applies uniformly to all Members.

Currently, there is a tier on EDGA's fee schedule that provides a rebate of $0.0005 per share where a Member, on a daily basis, measured monthly, posts more than 1% of the TCV in average daily volume. Based on average TCV for September 2011 (8.5 billion), in order to a Member to qualify for a rebate of $0.0005 per share under this criteria, the Member would have to post 85 million shares.

Another way to qualify for a rebate of $0.0005 per share, as proposed in this filing, would be for the Member, based on average TCV for September 2011 (8.5 billion), to add more than 22,000,000 shares and remove more than 22,000,000 shares. The Exchange believes that adding an additional way to qualify for the $0.0005 rebate per share represents an equitable allocation of reasonable dues, fees, and other charges since other exchanges offer similar rebates for adding and removing different amounts of liquidity based on the inherent value of said activity to their exchange. Likewise, the Exchange values Members that post more than 0.25% of TCV in average daily volume and remove more than 0.25% of TCV in average daily volume similar to Members that post more than 1% of TCV in average daily volume. The Exchange believes that adding another means to qualify for the tiered rebate incentivizes adders and removers of liquidity as well as just adders of liquidity and the practice of offering tiers to attract removers of liquidity to an exchange has become commonplace throughout the equities markets.[9]

The Exchange believes that the proposed decrease in the rate for Directed ISOs from $0.0033 per share to $0.0032 per share represents an equitable allocation of reasonable dues, fees, and other charges. The Exchange believes that this decreased fee to Members would provide an incentive for Members to provide liquidity that supports the quality of price discovery and promotes market transparency. Such increased volume also increases potential revenue to the Exchange, and would allow the Exchange to spread its administrative and infrastructure costs over a greater number of shares, leading to lower per share costs. These lower per share costs would allow the Exchange to pass on the savings to Members in the form of a lower fee. The fee is reasonable when compared to other market centers' fees for Directed ISOs, including, BATS that charges a fee of $0.0033 per share and NASDAQ that charges a fee of $0.0035 per share for routing Directed ISOs.[10] The Exchange believes that the proposed rate is non-discriminatory in that it applies uniformly to all Members.

The Exchange also notes that it operates in a highly competitive market in which market participants can readily direct order flow to competing venues if they deem fee levels at a particular venue to be excessive. The proposed rule change reflects a competitive pricing structure designed to incent market participants to direct their order flow to the Exchange. The Exchange believes that the proposed rates are equitable and non-discriminatory in that they apply uniformly to all Members. The Exchange believes the fees and credits remain competitive with those charged by other venues and therefore continue to be reasonable and equitably allocated to Members.

B. Self-Regulatory Organization's Statement on Burden on Competition

The proposed rule change does not impose any burden on competition that is not necessary or appropriate in furtherance of the purposes of the Act.

[8] In its October 2011 fee filing, the Exchange stated that the proposed maker/taker fee spread of $0.0002 or $0.0003, depending on if a tier is met (*see* footnote 4), was reasonable as the proposed maker/taker spread was competitive with other market centers maker/taker spreads (BATS BZX Exchange, 0–$0.0004 per share), Nasdaq OMX PSX ($.0001–$.0003 per share), and Nasdaq BX ($0.0001–$0.0013) per share).

[9] *See* NASDAQ's price list where NASDAQ offers a rebate of $0.00295 per share for members adding greater than 1.0% and adding and removing greater than 200,000 total contracts on the NASDAQ Options Market, and NASDAQ offers a rebate of $0.0029 per share for members adding greater than 0.15% and adding and removing greater than 115,000 total contracts on the NASDAQ Options Market. In addition, NASDAQ also offers a rebate of $0.0029 per share for members adding a minimum of 2 million shares per day and removing greater than 0.65%. NASDAQ also offers a rebate of $0.0025 per share for members that add a minimum of 2 million shares per day and remove greater than 0.45%. *See also http://www.nasdaqtrader.com/Trader.aspx?id=PriceListTrading2. See also* the BATS Exchange Fee schedule where BATS offers a rebate of $0.0029 per share for adding displayed liquidity for members who have an ADV equal to or greater than 1.0% of average TCV, where ADV means average daily volume calculated as the number of shares added or removed, combined, per day on a monthly basis. *See also http://www.batstrading.com/resources/regulation/rule_book/BZX_Fee_Schedule.pdf.*

[10] *Id.*

C. Self-Regulatory Organization's Statement on Comments on the Proposed Rule Change Received From Members, Participants or Others

The Exchange has not solicited, and does not intend to solicit, comments on this proposed rule change. The Exchange has not received any unsolicited written comments from members or other interested parties.

III. Date of Effectiveness of the Proposed Rule Change and Timing for Commission Action

The foregoing rule change has become effective pursuant to Section 19(b)(3) of the Act [11] and Rule 19b–4(f)(2) [12] thereunder. At any time within 60 days of the filing of such proposed rule change, the Commission summarily may temporarily suspend such rule change if it appears to the Commission that such action is necessary or appropriate in the public interest, for the protection of investors, or otherwise in furtherance of the purposes of the Act.

IV. Solicitation of Comments

Interested persons are invited to submit written data, views, and arguments concerning the foregoing, including whether the proposed rule change is consistent with the Act. Comments may be submitted by any of the following methods:

Electronic Comments

- Use the Commission's Internet comment form (*http://www.sec.gov/rules/sro.shtml*); or
- Send an email to *rule-comments@sec.gov*. Please include File Number SR–EDGA–2011–36 on the subject line.

Paper Comments

- Send paper comments in triplicate to Elizabeth M. Murphy, Secretary, Securities and Exchange Commission, 100 F Street NE., Washington, DC 20549–1090.

All submissions should refer to File Number SR–EDGA–2011–36. This file number should be included on the subject line if email is used. To help the Commission process and review your comments more efficiently, please use only one method. The Commission will post all comments on the Commission's Internet Web site (*http://www.sec.gov/rules/sro.shtml*). Copies of the submission, all subsequent amendments, all written statements with respect to the proposed rule change that are filed with the Commission, and all written communications relating to the proposed rule change between the Commission and any person, other than those that may be withheld from the public in accordance with the provisions of 5 U.S.C. 552, will be available for Web site viewing and printing in the Commission's Public Reference Room, 100 F Street NE., Washington, DC 20549, on official business days between the hours of 10 a.m. and 3 p.m. Copies of the filing also will be available for inspection and copying at the principal office of the Exchange. All comments received will be posted without change; the Commission does not edit personal identifying information from submissions. You should submit only information that you wish to make available publicly. All submissions should refer to File Number SR–EDGA–2011–36 and should be submitted on or before December 1, 2011.

For the Commission, by the Division of Trading and Markets, pursuant to delegated authority.[13]

Kevin M. O'Neill,

Deputy Secretary.

[FR Doc. 2011–29107 Filed 11–9–11; 8:45 am]

BILLING CODE 8011–01–P

[11] 15 U.S.C. 78s(b)(3)(A).

[12] 17 CFR 19b–4(f)(2).

[13] 17 CFR 200.30–3(a)(12).

SECURITIES AND EXCHANGE COMMISSION

[Release No. 34–65683; File No. SR–EDGX–2011–34]

Self-Regulatory Organizations; EDGX Exchange, Inc.; Notice of Filing and Immediate Effectiveness of Proposed Rule Change Relating to Amendments to the EDGX Exchange, Inc. Fee Schedule

November 4, 2011.

Pursuant to Section 19(b)(1) of the Securities Exchange Act of 1934 (the ''Act''),[1] and Rule 19b–4 thereunder,[2] notice is hereby given that on October 31, 2011, the EDGX Exchange, Inc. (the ''Exchange'' or the ''EDGX'') filed with the Securities and Exchange Commission (''Commission'') the proposed rule change as described in Items I, II, and III below, which items have been prepared by the self-regulatory organization. The Commission is publishing this notice to solicit comments on the proposed rule change from interested persons.

I. Self-Regulatory Organization's Statement of the Terms of Substance of the Proposed Rule Change

The Exchange proposes to amend its fees and rebates applicable to Members [3] of the Exchange pursuant to EDGX Rule 15.1(a) and (c). All of the changes described herein are applicable to EDGX Members. The text of the proposed rule change is available on the Exchange's Internet Web site at *http://www.directedge.com.*

II. Self-Regulatory Organization's Statement of the Purpose of, and Statutory Basis for, the Proposed Rule Change

In its filing with the Commission, the self-regulatory organization included statements concerning the purpose of, and basis for, the proposed rule change and discussed any comments it received on the proposed rule change. The text of these statements may be examined at the places specified in Item IV below. The self-regulatory organization has prepared summaries, set forth in sections A, B and C below, of the most significant aspects of such statements.

A. Self-Regulatory Organization's Statement of the Purpose of, and Statutory Basis for, the Proposed Rule Change

Purpose

The Exchange proposes to decrease the charge assessed for a Directed Intermarket Sweep Order [4] (''Directed ISO'') from $0.0033 per share to $0.0032 per share, which is reflected in Flag S of the Exchange's fee schedule.

The Exchange proposes to correct an administrative error by appending footnote 1 to the H Flag on the Exchange's fee schedule. The H flag was added on October 1, 2011,[5] and is another flag that adds liquidity on EDGX. Currently, the flags that add liquidity on EDGX and count towards the tiers identified in footnote 1 are B, V, Y, 3, 4, and MM.

The Exchange proposes to implement these amendments to its fee schedule on November 1, 2011.

Basis

The Exchange believes that the proposed rule changes are consistent with the objectives of Section 6 of the Exchange Act,[6] in general, and furthers

[1] 15 U.S.C. 78s(b)(1).

[2] 17 CFR 240.19b–4.

[3] A Member is any registered broker or dealer, or any person associated with a registered broker or dealer, that has been admitted to membership in the Exchange.

[4] *See* Exchange Rule 11.5(d)(2).

[5] *See* Securities Exchange Act Release No. 65541 (October 12, 2011), 76 FR 64409 (October 18, 2011) (SR–EDGX–2011–31).

[6] 15 U.S.C. 78f.

the objectives of Section 6(b)(4),[7] in particular, as it is designed to provide for the equitable allocation of reasonable dues, fees and other charges among its members and other persons using its facilities.

The Exchange believes that the proposed decrease in the rate for Directed ISOs from $0.0033 per share to $0.0032 per share represents an equitable allocation of reasonable dues, fees, and other charges. The Exchange believes that this decreased fee to Members would provide an incentive for Members to provide liquidity that supports the quality of price discovery and promotes market transparency. Such increased volume also increases potential revenue to the Exchange, and would allow the Exchange to spread its administrative and infrastructure costs over a greater number of shares, leading to lower per share costs. These lower per share costs would allow the Exchange to pass on the savings to Members in the form of a lower fee. The fee is reasonable when compared to other market centers' fees for Directed ISOs, including, BATS that charges a fee of $0.0033 per share and NASDAQ that charges a fee of $0.0035 per share for routing Directed ISOs.[8] The Exchange believes that the proposed rate is non-discriminatory in that it applies uniformly to all Members.

The Exchange proposes to correct an administrative error by appending footnote 1 to the H Flag on the Exchange's fee schedule. The H flag was added on October 1, 2011, and is another flag that adds liquidity on EDGX and counts towards the tiers identified in footnote 1. The Exchange believes that providing discounts for adding liquidity to the Exchange would incent liquidity. In addition, such increased volume increases potential revenue to the Exchange, and would allow the Exchange to spread its administrative and infrastructure costs over a greater number of shares, leading to lower per share costs. These lower per share costs would allow the Exchange to pass on the savings to Members in the form of a higher rebate. The increased liquidity also benefits all investors by deepening EDGX's liquidity pool, offering additional flexibility for all investors to enjoy cost savings, supporting the quality of price discovery, promoting market transparency and improving investor protection. Volume-based rebates such as the ones proposed herein have been widely adopted in the cash equities markets, and are equitable because they are open to all members on an equal basis and provide discounts that are reasonably related to the value to an exchange's market quality associated with higher levels of market activity, such as higher levels of liquidity provision and introduction of higher volumes of orders into the price and volume discovery processes. In addition, by correcting this administrative error, the Exchange adds additional transparency to its fee schedule for Members.

The Exchange also notes that it operates in a highly competitive market in which market participants can readily direct order flow to competing venues if they deem fee levels at a particular venue to be excessive. The proposed rule change reflects a competitive pricing structure designed to incent market participants to direct their order flow to the Exchange. The Exchange believes that the proposed rates are equitable and non-discriminatory in that they apply uniformly to all Members. The Exchange believes the fees and credits remain competitive with those charged by other venues and therefore continue to be reasonable and equitably allocated to Members.

B. Self-Regulatory Organization's Statement on Burden on Competition

The proposed rule change does not impose any burden on competition that is not necessary or appropriate in furtherance of the purposes of the Act.

C. Self-Regulatory Organization's Statement on Comments on the Proposed Rule Change Received From Members, Participants or Others

The Exchange has not solicited, and does not intend to solicit, comments on this proposed rule change. The Exchange has not received any unsolicited written comments from members or other interested parties.

III. Date of Effectiveness of the Proposed Rule Change and Timing for Commission Action

The foregoing rule change has become effective pursuant to Section 19(b)(3) of the Act[9] and Rule 19b–4(f)(2)[10] thereunder. At any time within 60 days of the filing of such proposed rule change, the Commission summarily may temporarily suspend such rule change if it appears to the Commission that such action is necessary or appropriate in the public interest, for the protection of investors, or otherwise in furtherance of the purposes of the Act.

IV. Solicitation of Comments

Interested persons are invited to submit written data, views, and arguments concerning the foregoing, including whether the proposed rule change is consistent with the Act. Comments may be submitted by any of the following methods:

Electronic Comments

- Use the Commission's Internet comment form (*http://www.sec.gov/rules/sro.shtml*); or
- Send an email to *rule-comments@sec.gov.* Please include File Number SR–EDGX–2011–34 on the subject line.

Paper Comments

- Send paper comments in triplicate to Elizabeth M. Murphy, Secretary, Securities and Exchange Commission, 100 F Street NE., Washington, DC 20549–1090.

All submissions should refer to File Number SR–EDGX–2011–34. This file number should be included on the subject line if email is used. To help the Commission process and review your comments more efficiently, please use only one method. The Commission will post all comments on the Commission's Internet Web site (*http://www.sec.gov/rules/sro.shtml*). Copies of the submission, all subsequent amendments, all written statements with respect to the proposed rule change that are filed with the Commission, and all written communications relating to the proposed rule change between the Commission and any person, other than those that may be withheld from the public in accordance with the provisions of 5 U.S.C. 552, will be available for Web site viewing and printing in the Commission's Public Reference Room, 100 F Street NE., Washington, DC 20549, on official business days between the hours of 10 a.m. and 3 p.m. Copies of the filing also will be available for inspection and copying at the principal office of the Exchange. All comments received will be posted without change; the Commission does not edit personal identifying information from submissions. You should submit only information that you wish to make available publicly. All submissions should refer to File Number SR–EDGX–2011–34 and should be submitted on or before December 1, 2011.

[7] 15 U.S.C. 78f(b)(4).

[8] *See http://www.batstrading.com/resources/regulation/rule_book/BZX_FeeSchedule.pdf. See also http://www.nasdaqtrader.com/Trader.aspx?id=PriceListTrading2.*

[9] 15 U.S.C. 78s(b)(3)(A).

[10] 17 CFR 19b–4(f)(2).

For the Commission, by the Division of Trading and Markets, pursuant to delegated authority.[11]

Kevin M. O'Neill,

Deputy Secretary.

[FR Doc. 2011–29105 Filed 11–9–11; 8:45 am]

BILLING CODE 8011–01–P

SECURITIES AND EXCHANGE COMMISSION

[Release No. 34–65699; File No. SR–ICC–2011–03]

Self-Regulatory Organizations; ICE Clear Credit LLC; Notice of Filing of Proposed Rule Change to Adopt ICC's Enhanced Margin Methodology (the ''Decomp Model'')

November 7, 2011.

Pursuant to Section 19(b)(1) of the Securities Exchange Act of 1934 (''Act'')[1] and Rule 19b–4 thereunder[2] notice is hereby given that on November 4, 2011, ICE Clear Credit LLC (''ICC'') filed with the Securities and Exchange Commission (''Commission'') the proposed rule change as described in Items I, II, and III below, which Items have been prepared primarily by ICC. The Commission is publishing this notice to solicit comments on the proposed rule change from interested persons.

I. Self-Regulatory Organization's Statement of the Terms of Substance of the Proposed Rule Change

The ICC Decomp Model includes the following enhancements to the ICC margin methodology for Credit Default Swap (''CDS'') Indices: replacing standard deviation with Mean Absolute deviation (''MAD'') as a measure of spread volatility, use of an auto regressive process to obtain multi-horizon risk measures, expansion of spread response scenarios, introduction of liquidity requirements, and base concentration charges.

II. Self-Regulatory Organization's Statement of the Purpose of, and Statutory Basis for, the Proposed Rule Change

In its filing with the Commission, ICC included statements concerning the purpose of and basis for the proposed rule change and discussed any comments it received on the proposed rule change. The text of these statements may be examined at the places specified in Item IV below. ICC has prepared summaries, set forth in sections (A), (B), and (C) below, of the most significant aspects of these statements.[3]

(A) Self-Regulatory Organization's Statement of the Purpose of, and Statutory Basis for, the Proposed Rule Change

The enhancements effected by this proposed rule change have been reviewed and/or recommended by the ICC Risk Working Group, ICC Risk Committee, ICC Board of Managers, an independent third-party risk expert (Finance Concepts), the Federal Reserve Bank of New York and the New York State Banking Department. Implementation of these enhancements to the ICC risk methodology will result in a better measurement of the risk associated with clearing CDS Indices.

A fundamental aspect of the Decomp Model is the recognition that the CDS Indices cleared by ICC are essentially a composition of specific Single Name CDS instruments. As a result of the decomposition of the CDS Indices, ICC will be able to (1) incorporate jump-to-default risk as a component of the risk margin associated with CDS Indices and (2) provide appropriate portfolio margin treatment between CDS Indices and offsetting CDS Single Name positions.

Incorporating jump-to-default risk as a component of the Decomp Model will result in a better measurement of the risk associated with clearing CDS Indices.

Recognizing the highly correlated relationship between long-short positions in CDS Indices and the underlying CDS Single Name constituents of the CDS Indices will provide for fundamental and appropriate portfolio margin treatment. To date, ICC has not offered such fundamental and appropriate portfolio treatment strictly for operational reasons. However, on or about December 12, 2011, ICC will be operationally ready to offer such portfolio margining treatment with respect to its clearing participants' proprietary positions.

As noted above, the proposed change in the ICC margin methodology will provide appropriate portfolio margining treatment only with respect to ICC clearing participants' proprietary positions. The portfolio margining treatment will only be available to ICC clearing participants' proprietary positions because ICC does not currently clear CDS Single Names for customer-related transactions. Accordingly, currently, there are no customer-related positions that would qualify for portfolio margining treatment. ICC does not believe that the fact that the portfolio margining element of the proposed Decomp Model will apply only to a Clearing Participant's proprietary account raises an issue of unfair discrimination. Importantly, the portfolio margining aspect of the Decomp Model does not unfairly discriminate with respect to similarly situated participants because it is available to any participant for whom ICC is currently able to provide portfolio margin treatment. Again, ICC does not currently offer clearing in CDS Single Names for customer-related transactions. In the event that ICC makes CDS Single Name clearing available for customer-related transactions and provided that the SEC and CFTC grant the requisite approval as discussed below, ICC will offer portfolio margining with respect to customer-related transactions. The proposed rule amendments are not designed to permit unfair discrimination among participants in the use of ICC's clearing services. ICC is not discriminating among proprietary participants or among customers. Proprietary accounts are not subject to the SEC's customer protection rules and thus are not subject to the same restrictions that the SEC has imposed on customer accounts. Specifically, ICC clears proprietary CDS Index and CDS Single Name positions in the same commingled house account origin. Whereas, as customer-related positions in CDS Indices and CDS Single Names must be maintained, as a matter of law, in separate accounts. Thus, ICC is unable to commingle and portfolio margin customer-related CDS Index and CDS Single Name positions without the SEC's and CFTC's approval of ICC's pending petitions.

On or about November 7, 2011, ICC formally filed with the SEC a petition to provide portfolio margining treatment for customer-related positions (the ''Customer-related Portfolio Margining Request'') in anticipation of ICC offering clearing of CDS Single Names for customer-related transactions in the future. The Customer-related Portfolio Margining Request is posted on the ICC Web site and will be posted on the SEC's Web site.[4] In short, the Customer-related Portfolio Margining Request, if granted by the SEC, would provide all customers with the same portfolio margining treatment that is being

[11] 17 CFR 200.30–3(a)(12).

[1] 15 U.S.C. 78s(b)(1).

[2] 17 CFR 240.19b–4.

[3] The Commission has modified the text of the summaries prepared by ICC.

[4] Available at: *https://www.theice.com/publicdocs/globalmarketfacts/docs/legislativecomments/ICC_Commingling_PortfolioMargining_Petitions.pdf*. The petition also will be available on the Commission's public Web site at: *http://www.sec.gov/rules/petitions.shtml*.

proposed in this submission for the proprietary accounts. However, in order to obtain portfolio margining treatment for customers, ICC was required to file the separate Customer-related Portfolio Margining Request. Although the SEC has not published ICC's Customer-related Portfolio Margining Request for public comment, the SEC is interested in receiving comments from the public.

ICC believes that the proposed rule change will facilitate the prompt and accurate settlement of security-based swaps and contribute to the safeguarding of securities and funds associated with security-based swap transactions. As discussed above, ICC does not believe that the portfolio margining-related proposed changes raise an issue of unfair discrimination in the use of ICC's clearing services by similarly situated participants.

(B) Self-Regulatory Organization's Statement on Burden on Competition

ICC does not believe the proposed rule change would have any impact, or impose any burden, on competition.

(C) Self-Regulatory Organization's Statement on Comments on the Proposed Rule Change Received from Members, Participants or Others

Written comments relating to the proposed rule change have not been solicited or received. ICC will notify the Commission of any written comments received by ICC.

III. Date of Effectiveness of the Proposed Rule Change and Timing for Commission Action

Within 45 days of the date of publication of this notice in the **Federal Register** or within such longer period up to 90 days (i) as the Commission may designate if it finds such longer period to be appropriate and publishes its reasons for so finding or (ii) as to which the self-regulatory organization consents, the Commission will:

(A) By order approve or disapprove the proposed rule change or

(B) Institute proceedings to determine whether the proposed rule change should be disapproved.

IV. Solicitation of Comments

Interested persons are invited to submit written data, views, and arguments concerning the foregoing, including whether the proposed rule change is consistent with the Act. Comments may be submitted by any of the following methods:

Electronic Comments

• Use the Commission's Internet comment form (*http://www.sec.gov/rules/sro.shtml*) or Send an email to *rule-comments@sec.gov.* Please include File Number SR–ICC–2011–03 on the subject line.

Paper Comments

Send paper comments in triplicate to Elizabeth M. Murphy, Secretary, Securities and Exchange Commission, 100 F Street NE., Washington, DC 20549–1090.

All submissions should refer to File Number SR–ICC–2011–03. This file number should be included on the subject line if email is used. To help the Commission process and review your comments more efficiently, please use only one method. The Commission will post all comments on the Commission's Internet Web site (*http://www.sec.gov/rules/sro.shtml*). Copies of the submission, all subsequent amendments, all written statements with respect to the proposed rule change that are filed with the Commission, and all written communications relating to the proposed rule change between the Commission and any person, other than those that may be withheld from the public in accordance with the provisions of 5 U.S.C. 552, will be available for Web site viewing and printing in the Commission's Public Reference Section, 100 F Street NE., Washington, DC 20549, on official business days between the hours of 10 a.m. and 3 p.m. Copies of such filings will also be available for inspection and copying at the principal office of ICC and on ICC's Web site at *https://www.theice.com/publicdocs/regulatory_filings/ICEClearCredit_110411.pdf.*

All comments received will be posted without change; the Commission does not edit personal identifying information from submissions. You should submit only information that you wish to make available publicly. All submissions should refer to File Number SR–ICC–2011–03 and should be submitted on or before December 1, 2011.

For the Commission, by the Division of Trading and Markets, pursuant to delegated authority.[5]

Kevin M. O'Neill,

Deputy Secretary.

[FR Doc. 2011–29163 Filed 11–9–11; 8:45 am]

BILLING CODE P

[5] 17 CFR 200.30–3(a)(12).

SECURITIES AND EXCHANGE COMMISSION

[Release No. 34–65679, File No. SR–MSRB–2011–17]

Self-Regulatory Organizations; Municipal Securities Rulemaking Board; Order Granting Approval of Proposed Rule Change Regarding Professional Qualifications and Information Concerning Associated Persons

November 3, 2011.

I. Introduction

On September 13, 2011, the Municipal Securities Rulemaking Board (''MSRB'' or ''Board''), filed with the Securities and Exchange Commission (''Commission''), pursuant to Section 19(b)(1) of the Securities Exchange Act of 1934 (''Exchange Act''),[1] and Rule 19b–4 thereunder,[2] a proposed rule change consisting of amendments to Rule G–3, on professional qualifications, and Rule G–7, on information concerning associated persons. The proposed rule change was published for comment in the **Federal Register** on September 30, 2011.[3] The Commission received one comment letter regarding the proposed rule change and the MSRB's response to that comment letter.[4]

This order approves the proposed rule change.

II. Background and Description of Proposal

MSRB Rule G–3(a)(i) defines a municipal securities representative as a natural person associated with a broker, dealer or municipal securities dealer (''dealer''), other than a person whose functions are solely clerical or ministerial, whose activities include one or more of the following:

1. Underwriting, trading or sales of municipal securities;

2. Financial advisory or consultant services for issuers in connection with the issuance of municipal securities;

3. Research or investment advice with respect to municipal securities; or

4. Any other activities that involve communication, directly or indirectly, with public investors in municipal securities provided, however, that the

[1] 15 U.S.C. 78s(b)(1).

[2] 17 CFR 240.19b–4.

[3] *See* Securities Exchange Act Release No. 65393 (September 26, 2011), 76 FR 60953 (the ''Commission's Notice'').

[4] *See* letter from Marian H. Desilets, President, Association of Registration Management, Inc., dated October 7, 2011, and letter from Margaret C. Henry, General Counsel, Market Regulation, MSRB, dated October 28, 2011.

activities enumerated in 3 and 4 above are limited to such activities as they relate to the activities enumerated in 1 and 2 above.

An individual seeking to become qualified as a municipal securities representative must pass either of two qualification examinations—the Municipal Securities Representative Qualification Examination (Series 52) or the General Securities Registered Representative Examination (Series 7).

On September 7, 2011, FINRA filed with the Commission a proposed rule change to restructure the Series 7 examination to focus on a broader range of securities products available for sale by registered representatives. The effect of these changes would be a de-emphasis on non-sales aspects of the activities of securities professionals. In focusing on general principles applicable to the buying and selling of a broad range of securities, rather than specific products, the restructured Series 7 examination would reduce the number of questions that test for specific knowledge of municipal securities and the rules of the MSRB. Given the shift in emphasis of the Series 7 examination and the reduced number of municipal questions, in the view of the MSRB, passage of the Series 7 examination would no longer represent a useful gauge of whether a securities professional was qualified to perform municipal securities activities other than sales to, and purchases from, customers [5] of municipal securities (''sales activities'').

As a result of this restructured Series 7 examination, the MSRB filed the proposed rule change consisting of amendments to MSRB Rule G–3, on professional qualifications. The proposed rule change would provide that the Series 7 examination would no longer qualify individuals as ''municipal securities representatives,'' unless they were engaged solely in sales activities or they passed the Series 7 examination prior to the effective date of the proposed rule change. Instead, passage of the Series 52 examination would be required for any municipal securities activities other than sales activities.

The proposed rule change would create a sub-category of municipal securities representative referred to as a ''municipal securities sales limited representative'' and would apply to individuals whose activities with respect to municipal securities are limited exclusively to sales activities. The proposed rule change would provide that an individual could qualify as a municipal securities sales limited representative by passage of the Series 7 examination. Other individuals would be required to pass the Series 52 examination in order to qualify as full municipal securities representatives, unless they had passed the Series 7 examination prior to the effective date of the proposed rule change and had maintained this registration.

The proposed rule change would also require a municipal securities limited representative who wished to become a municipal securities principal to pass the Series 52 examination prior to taking the Series 53 municipal securities principal examination. Otherwise, the proposed amendments to Rule G–3 would not distinguish between ''municipal securities sales limited representatives'' and other ''municipal securities representatives.''

The MSRB also filed proposed amendments to MSRB Rule G–7, on information concerning associated persons. Rule G–7 requires brokers, dealers and municipal securities dealers (''dealers'') to keep records concerning their associated persons, including the category of function they perform ''whether municipal securities principal, municipal securities sales principal, municipal securities representative or financial and operations principal.'' The proposed rule change would add ''municipal securities sales limited representative'' to that list.[6] Additionally, the proposed rule change would streamline Rule G–7(b) by simply requiring that dealers obtain either Form U4 (in the case of non-bank dealers) or Form MSD–4 (in the case of bank dealers), rather than repeating the categories of information required by those forms.

III. Discussion of Comments and MSRB's Response

The Commission received one comment letter from the Association of Registration Management, Inc. and a response from the MSRB to the comment letter.[7]

The commenter expressed concern about the number of individual product and regulation specific examinations proposed, introduced or reintroduced within the past 18 months, and stated that these have caused considerable burden on the industry to effectively implement standards within firms to comply with ongoing registration requirements. The commenter further stated that this protocol of individual exams is making it difficult for registered persons to fully and easily understand what is required at all times to ensure and remain compliant.

The MSRB responded that the commenter's letter mistakenly states that the MSRB's Series 52 and 53 examinations were among those new examinations and that comments of that nature are more appropriately addressed to the Commission or FINRA. The MSRB stated that it only took action with respect to the Series 7 qualification because of FINRA's decision to change the focus of the exam.

The commenter further stated that the revised rule could potentially require larger firms to have many of its registered representatives obtain an additional license to ensure continuity and coverage across all business lines, and that it is not clear if firms will be required to apply for ''MR position codes'' in order for their associated persons to be grandfathered. The MSRB responded that a dealer need take no action in order for its associated persons to be grandfathered.

The commenter also inquired whether the MSRB will permit FINRA to grandfather additional associated persons who might have let their Series 7 registrations lapse before November 7, 2011. The MSRB responded that the proposal would not permit such additional grandfathering.

The commenter requested that the effective date of the MSRB proposal be delayed until late first quarter of 2012 at the earliest to allow firms to be able to adequately identify and prepare (budget, staffing, etc.) for compliance as well as allow member firms to meet other already announced regulatory obligations along with year-end renewal process workloads and annual training requirements. The commenter further requested consideration of the fact that the industry had not been apprised of the change until nearly 45 days prior to the proposed implementation, stating that such timing will cause an unnecessary hardship.

The MSRB responded that it made the decision to have the changes to Rule G–3 take effect at the same time as FINRA's changes to the Series 7 examination and that FINRA's revised Series 7 will begin to be implemented on November 7, 2011. The MSRB further stated that at that time, the number of municipal questions will be reduced, and those questions will address only sales activities. Accordingly, the MSRB stated that such examination would no longer assess an associated person's ability to

[5] ''Customer'' is defined in MSRB Rule D–9 as ''any person other than a broker, dealer or municipal securities dealer acting in its capacity as such or an issuer in transactions involving the sale by the issuer of a new issue of its securities.''

[6] The proposed rule change would also add ''municipal fund securities limited principal'' to this list to reflect the previous creation of this separate category.

[7] *See supra* note 4.

perform other municipal securities activities in a competent manner, so no delay in the effective date of the Rule G–3 changes is appropriate.

The Commission has carefully considered the commenter's concerns about the MSRB's proposed changes to the licensing requirements for associated persons of brokers, dealers or municipal securities dealers for municipal securities activities other than sales to customers, the scope of the ''grandfather'' provisions, and the effective date of the proposed rule change, and does not believe the proposed changes are inconsistent with the Exchange Act.

IV. Discussion and Commission Findings

The Commission has carefully considered the proposed rule change, the comment letter received, and the MSRB's response to the comment letter and finds that the proposed rule change is consistent with the requirements of the Exchange Act and the rules and regulations thereunder applicable to the MSRB.[8] The Commission believes that the proposed rule change is consistent with the provisions of Section 15B(b)(2)(A) of the Exchange Act, which authorizes the MSRB to prescribe ''standards of training, experience, competence, and such other qualifications as the Board finds necessary or appropriate in the public interest or for the protection of investors and municipal entities or obligated persons.'' Section 15B(b)(2)(A) of the Exchange Act also provides that the Board may appropriately classify municipal securities brokers, municipal securities dealers, and municipal advisors and persons associated with municipal securities brokers, municipal securities dealers, and municipal advisors and require persons in any such class to pass tests prescribed by the Board.

The proposed rule change is also consistent with the provisions of Section 15B(b)(2)(A) of the Exchange Act in that the proposed rule change will ensure that individuals seeking to engage in more than sales activities will be tested on their qualification and competency to engage in such other municipal securities activities. These individuals will be required to pass an examination that includes questions both on municipal securities and the municipal markets and on U.S. government, Federal agency and other financial instruments, economic activity, government policy, factors affecting interest rates, and applicable Federal securities laws and regulations. The proposed rule change will also more closely align the information dealers are required to obtain pursuant to Rule G–7 with the information already required by FINRA and the bank regulators, thereby reducing the administrative burden on such dealers.

V. Conclusion

It is therefore ordered, pursuant to Section 19(b)(2) of the Exchange Act,[9] that the proposed rule change (SR–MSRB–2011–17) be, and it hereby is, approved.

For the Commission, by the Division of Trading and Markets, pursuant to delegated authority.[10]

Kevin M. O'Neill,

Deputy Secretary.

[FR Doc. 2011–29104 Filed 11–9–11; 8:45 am]

BILLING CODE 8011–01–P

[8] In approving the proposed rule change, the Commission notes that it has considered the proposed rule's impact on efficiency, competition and capital formation. 15 U.S.C. 78c (f).

[9] 15 U.S.C. 78s(b)(2).

[10] 17 CFR 200.30–3(a)(12).

DEPARTMENT OF STATE

[Delegation of Authority: 304–1]

Delegation by the Secretary of State to the Under Secretary of State for Arms Control and International Security of Authority To Submit Certain Non-Proliferation Reports to Congress

By virtue of the authority vested in me as the Secretary of State, including Section 1 of the State Department Basic Authorities Act, as amended (22 U.S.C. 2651a), the authorities enumerated below, and Executive Order 13346, I hereby delegate to the Under Secretary for Arms Control and International Security, to the extent authorized by law, the authority to approve submission of reports to Congress pursuant to:

(1) Section 1344 of the Foreign Relations Authorization Act, Fiscal Year 2003, Public Law 207–228;

(2) Section 2809(c)(2) of the Foreign Affairs Reform and Restructuring Act of 1998, Public Law 105–277;

(3) Section 1343(a) of the Iran Nuclear Proliferation Prevent Act of 2002 (incorporated in the Foreign Relations Authorization Act, Fiscal Year 2003), Public Law 107–228;

(4) Section 204(c) of the International Emergency Economic Powers Act (50 U.S.C. 1701 *et seq.*) and Section 401(c) of the National Emergencies Act (50 U.S.C. 1601 *et seq.*);

(5) Section 1308(a) of the Foreign Relations Authorization Act for FY 2003, Public Law 107–228;

(6) Determination and Congressional Reporting Requirement Concerning Israeli Participation in the IAEA required by the Foreign Operations, Export Financing, and Related Programs Appropriations Act, 2006, Title II of Public Law 109–102; and

(7) Certification consistent with section 2(7)(C)(i) of the resolution of advice and consent to ratification of the Chemical Weapons Convention adopted by the Senate on April 24, 1997, with respect to the effectiveness and viability of the Australia Group.

Any act, executive order, regulation or procedure subject to, or affected by this delegation shall be deemed to be such act, executive order, regulation or procedure, as amended from time to time.

Notwithstanding this delegation of authority, the Secretary, the Deputy Secretary, or the Deputy Secretary for Management and Resources may at any time exercise any authority or function delegated by this delegation or authority.

This Delegation of authority supersedes Delegation of Authority 304, dated February 16, 2006, and shall be published in the **Federal Register**.

Dated: October 28, 2011.

Hillary Rodham Clinton,

Secretary of State.

[FR Doc. 2011–29154 Filed 11–9–11; 8:45 am]

BILLING CODE 4710–27–P

DEPARTMENT OF TRANSPORTATION

Office of the Secretary

[Docket No. DOT–OST–2011–0129]

Proposed Information Collection Request; Notice of New Requirements and Procedures for Grant Payment Request Submission

AGENCY: Department of Transportation (DOT).

ACTION: Notice with request for comments.

SUMMARY: The DOT invites the public and other Federal agencies to comment on a proposed information collection concerning new requirements and procedures for grant payment request submission. DOT will submit the proposed information collection request to the Office of Management and Budget (OMB) for review, as required by the Paperwork Reduction Act of 1995 (PRA) (44 U.S.C. 3506(c)(2)(A)). This notice sets forth new requirements and

procedures for grantees that submit and receive payments from DOT Operating Administrations (OAs).[1] DOT is updating systems that support grant payments and there will be changes to the way grantees complete and submit payment requests. Simplifying the DOT grant payment process will save both the grantee and the Federal Government time and expense that come with paper-based grant application and payment administration. *Note:* At this time, this requirement is not applicable to DOT grant recipients requesting payment electronically through the National Highway Traffic Safety Administration's Grant Tracking System (GTS), the Federal Highway Administration's Rapid Approval State Payment System (RASPS), or Federal Transit Administration (FTA) grant recipients requesting payment through the Electronic Clearing House Operation System (ECHO–Web).

DATES: Comments must be submitted on or before January 9, 2012.

FOR FURTHER INFORMATION CONTACT: Requests for additional information should be directed to US Department of Transportation, Office of Financial Management, B–30, room W93–431, 1200 New Jersey Avenue SE., Washington DC 20590–0001, (202) 366–1306, *DOTElectronicInvoicing@dot.gov*.

SUPPLEMENTARY INFORMATION:

Title: Notice of Requirements and Procedures for Grant Payment Request Submission.

OMB Control Number: XXXX–XXXX.

Type of Request: New information collection.

Background: This notice sets forth requirements and procedures for grantees that receive payments from DOT OAs, with the exception of DOT grant recipients requesting payment electronically through the NHTSA's GTS, the FHWA's RASPS, or FTA grant recipients requesting payment through the ECHO–Web. The proposed procedures provide that—

- Grantees will now be required to have electronic internet access to register in the Delphi eInvoicing system.
- Grantees will be required to submit payment requests electronically and DOT OAs must process payment requests electronically.
- The identities of system users must be verified prior to receiving access to the Delphi eInvoicing system. Users must complete a user request form and provide the following information: Full name, work address, work phone number, work email address, home address and home phone number. Once completed, this form must be presented to a Notary Public for verification. Once notarized, the prospective grantee user will return the form to receive their login credentials.
- DOT Office of Financial Management officials may allow exceptions to the requirement that grantees register and submit payment requests through the Delphi eInvoicing system under limited circumstances. Recipients may apply for an exemption by submitting an electronic Waiver Request Form to the DOT Office of Financial Management. The exceptions will be considered on a case by case basis via Waiver Request Form.

Affected Public: DOT Grant Recipients.

Estimated Number of Respondents: 11,000.

Estimated Number of Responses: 11,000.

Annual Estimated Total Annual Burden Hours: 22,000 (initial registration only).

Frequency of Collection: One time.

ADDRESSES: Send comments regarding the burden estimate, including suggestions for reducing the burden, to U.S. Department of Transportation, Office of Financial Management, B–30, Room W93–431, 1200 New Jersey Avenue SE., Washington DC 20590–0001, (202) 366–1306, *DOTElectronicInvoicing@dot.gov*.

Comments: Comments are invited on: Whether the proposed collection of information is necessary for the proper performance of the functions of the Department, including whether the information will have practical utility; the accuracy of the Department's estimate of the burden of the proposed information collection; ways to enhance the quality, utility and clarity of the information to be collected; and ways to minimize the burden of the collection of information on respondents.

Issued in Washington, DC, on November 1, 2011.

David Rivait.

Deputy Chief Financial Officer, Department of Transportation.

[FR Doc. 2011–28747 Filed 11–9–11; 8:45 am]

BILLING CODE 4910–9X–P

[1] The DOT OAs are: Office of the Secretary of Transportation (OST), Federal Aviation Administration (FAA), Federal Highway Administration (FHWA), Federal Motor Carrier Safety Administration (FMCSA), Federal Railroad Administration (FRA), Federal Transit Administration (FTA), Maritime Administration (MARAD), National Highway Traffic Safety Administration (NHTSA), Office of Inspector General (OIG), Pipeline and Hazardous Materials Safety Administration (PHMSA), Research and Innovative Technology Administration (RITA), Saint Lawrence Seaway Development Corporation (SLSDC) and Surface Transportation Board (STB).

DEPARTMENT OF TRANSPORTATION

Office of the Secretary

Notice of Applications for Certificates of Public Convenience and Necessity and Foreign Air Carrier Permits Filed Under Subpart B (Formerly Subpart Q) During the Week Ending October 22, 2011

The following Applications for Certificates of Public Convenience and Necessity and Foreign Air Carrier Permits were filed under Subpart B (formerly Subpart Q) of the Department of Transportation's Procedural Regulations (See 14 CFR 301.201 *et seq.*). The due date for Answers, Conforming Applications, or Motions to Modify Scope are set forth below for each application. Following the Answer period DOT may process the application by expedited procedures. Such procedures may consist of the adoption of a show-cause order, a tentative order, or in appropriate cases a final order without further proceedings.

Docket Number: DOT–OST–2011–0193.

Date Filed: October 21, 2011.

Due Date for Answers, Conforming Applications, or Motion to Modify Scope: November 14, 2011.

Description: Application of GoJet Airlines, LLC (''GOJET'') requesting an amendment to its certificate authority, to wit a removal of the restriction on the total number of aircraft GOJET can operate and/or an increase in the number by fifteen (15) aircraft.

Renee V. Wright,

Program Manager, Docket Operations, Federal Register Liaison.

[FR Doc. 2011–29123 Filed 11–9–11; 8:45 am]

BILLING CODE 4910–9X–P

DEPARTMENT OF TRANSPORTATION

Federal Motor Carrier Safety Administration

[Docket No. FMCSA–2001–9561; FMCSA–2002–13411; FMCSA–2005–22194; FMCSA–2007–27897; FMCSA–2007–28695; FMCSA–2009–0206]

Qualification of Drivers; Exemption Applications; Vision

AGENCY: Federal Motor Carrier Safety Administration (FMCSA), DOT.

ACTION: Notice of renewal of exemptions; request for comments.

SUMMARY: FMCSA announces its decision to renew the exemptions from the vision requirement in the Federal Motor Carrier Safety Regulations for 18

individuals. FMCSA has statutory authority to exempt individuals from the vision requirement if the exemptions granted will not compromise safety. The Agency has concluded that granting these exemption renewals will provide a level of safety that is equivalent to or greater than the level of safety maintained without the exemptions for these commercial motor vehicle (CMV) drivers.

DATES: This decision is effective December 6, 2011. Comments must be received on or before December 12, 2011.

ADDRESSES: You may submit comments bearing the Federal Docket Management System (FDMS) numbers: FMCSA–2001–9561; FMCSA–2002–13411; FMCSA–2005–22194; FMCSA–2007–27897; FMCSA–2007–28695; FMCSA–2009–0206, using any of the following methods:

- *Federal eRulemaking Portal:* Go to *http://www.regulations.gov*. Follow the on-line instructions for submitting comments.
- *Mail:* Docket Management Facility; U.S. Department of Transportation, 1200 New Jersey Avenue SE., West Building Ground Floor, Room W12–140, Washington, DC 20590–0001.
- *Hand Delivery or Courier:* West Building Ground Floor, Room W12–140, 1200 New Jersey Avenue SE., Washington, DC, between 9 a.m. and 5 p.m., Monday through Friday, except Federal Holidays.
- *Fax:* 1–(202) 493–2251.

Instructions: Each submission must include the Agency name and the docket number for this notice. Note that DOT posts all comments received without change to *http://www.regulations.gov*, including any personal information included in a comment. Please see the Privacy Act heading below.

Docket: For access to the docket to read background documents or comments, go to *http://www.regulations.gov* at any time or Room W12–140 on the ground level of the West Building, 1200 New Jersey Avenue SE., Washington, DC, between a.m. and 5 p.m., Monday through Friday, except Federal holidays. The Federal Docket Management System (FDMS) is available 24 hours each day, 365 days each year. If you want acknowledgment that we received your comments, please include a self-addressed, stamped envelope or postcard or print the acknowledgement page that appears after submitting comments on-line.

Privacy Act: Anyone may search the electronic form of all comments received into any of our dockets by the name of the individual submitting the comment (or of the person signing the comment, if submitted on behalf of an association, business, labor union, *etc.*). You may review DOT's Privacy Act Statement for the FDMS published in the **Federal Register** on January 17, 2008 (73 FR 3316), or you may visit *http://edocket.access.gpo.gov/2008/pdf/E8-785.pdf*.

FOR FURTHER INFORMATION CONTACT: Elaine M. Papp, Chief, Medical Programs Division, (202) 366–4001, fmcsamedical@dot.gov, FMCSA, Department of Transportation, 1200 New Jersey Avenue SE., Room W64–224, Washington, DC 20590–0001. Office hours are from 8:30 a.m. to 5 p.m. Monday through Friday, except Federal holidays.

SUPPLEMENTARY INFORMATION:

Background

Under 49 U.S.C. 31136(e) and 31315, FMCSA may renew an exemption from the vision requirements in 49 CFR 391.41(b)(10), which applies to drivers of CMVs in interstate commerce, for a two-year period if it finds ''such exemption would likely achieve a level of safety that is equivalent to or greater than the level that would be achieved absent such exemption.'' The procedures for requesting an exemption (including renewals) are set out in 49 CFR part 381.

Exemption Decision

This notice addresses 18 individuals who have requested renewal of their exemptions in accordance with FMCSA procedures. FMCSA has evaluated these 18 applications for renewal on their merits and decided to extend each exemption for a renewable two-year period. They are:

Donald R. Beauchesne
John E. Bell
Henry L Chastain
Thomas R. Crocker
Steven C. Durst
Clinton D. Edwards
Gerald W. Fox
Richard L. Gandee
John L. Hynes
Richard H. Kind
Jason E. Mallette
Thomas C. Meadows
David A. Morris
Leigh E. Moseman
Ronald F. Prezzia
Richard P. Stanley
Paul D. Stoddard
Scott A. Tetter

The exemptions are extended subject to the following conditions: (1) That each individual has a physical examination every year (a) by an ophthalmologist or optometrist who attests that the vision in the better eye continues to meet the requirements in 49 CFR 391.41(b)(10), and (b) by a medical examiner who attests that the individual is otherwise physically qualified under 49 CFR 391.41; (2) that each individual provides a copy of the ophthalmologist's or optometrist's report to the medical examiner at the time of the annual medical examination; and (3) that each individual provide a copy of the annual medical certification to the employer for retention in the driver's qualification file and retains a copy of the certification on his/her person while driving for presentation to a duly authorized Federal, State, or local enforcement official. Each exemption will be valid for two years unless rescinded earlier by FMCSA. The exemption will be rescinded if: (1) The person fails to comply with the terms and conditions of the exemption; (2) the exemption has resulted in a lower level of safety than was maintained before it was granted; or (3) continuation of the exemption would not be consistent with the goals and objectives of 49 U.S.C. 31136(e) and 31315.

Basis for Renewing Exemptions

Under 49 U.S.C. 31315(b)(1), an exemption may be granted for no longer than two years from its approval date and may be renewed upon application for additional two year periods. In accordance with 49 U.S.C. 31136(e) and 31315, each of the 18 applicants has satisfied the entry conditions for obtaining an exemption from the vision requirements (66 FR 30502; 66 FR 41654; 67 FR 76439; 68 FR 10298; 70 FR 41811; 70 FR 57353; 70 FR 72689; 72 FR 39879; 72 FR 40362; 72 FR 46261; 72 FR 52419; 72 FR 54972; 72 FR 62897; 74 FR 43217; 74 FR 49069; 74 FR 57551; 74 FR 60021). Each of these 18 applicants has requested renewal of the exemption and has submitted evidence showing that the vision in the better eye continues to meet the requirement specified at 49 CFR 391.41(b)(10) and that the vision impairment is stable. In addition, a review of each record of safety while driving with the respective vision deficiencies over the past two years indicates each applicant continues to meet the vision exemption requirements. These factors provide an adequate basis for predicting each driver's ability to continue to drive safely in interstate commerce. Therefore, FMCSA concludes that extending the exemption for each renewal applicant for a period of two years is likely to achieve a level of safety

equal to that existing without the exemption.

Request for Comments

FMCSA will review comments received at any time concerning a particular driver's safety record and determine if the continuation of the exemption is consistent with the requirements at 49 U.S.C. 31136(e) and 31315. However, FMCSA requests that interested parties with specific data concerning the safety records of these drivers submit comments by December 12, 2011.

FMCSA believes that the requirements for a renewal of an exemption under 49 U.S.C. 31136(e) and 31315 can be satisfied by initially granting the renewal and then requesting and evaluating, if needed, subsequent comments submitted by interested parties. As indicated above, the Agency previously published notices of final disposition announcing its decision to exempt these 18 individuals from the vision requirement in 49 CFR 391.41(b)(10). The final decision to grant an exemption to each of these individuals was made on the merits of each case and made only after careful consideration of the comments received to its notices of applications. The notices of applications stated in detail the qualifications, experience, and medical condition of each applicant for an exemption from the vision requirements. That information is available by consulting the above cited **Federal Register** publications.

Interested parties or organizations possessing information that would otherwise show that any, or all, of these drivers are not currently achieving the statutory level of safety should immediately notify FMCSA. The Agency will evaluate any adverse evidence submitted and, if safety is being compromised or if continuation of the exemption would not be consistent with the goals and objectives of 49 U.S.C. 31136(e) and 31315, FMCSA will take immediate steps to revoke the exemption of a driver.

Issued on: October 28, 2011.

Larry W. Minor,

Associate Administrator for Policy.

[FR Doc. 2011–29161 Filed 11–9–11; 8:45 am]

BILLING CODE 4910–EX–P

DEPARTMENT OF TRANSPORTATION

Federal Motor Carrier Safety Administration

[Docket No. FMCSA–1999–5578; FMCSA–2004–19477; FMCSA–2005–21711; FMCSA–2007–27897; FMCSA–2007–29019; FMCSA–2009–0154]

Qualification of Drivers; Exemption Applications; Vision

AGENCY: Federal Motor Carrier Safety Administration (FMCSA), DOT.

ACTION: Notice of renewal of exemptions; request for comments.

SUMMARY: FMCSA announces its decision to renew the exemptions from the vision requirement in the Federal Motor Carrier Safety Regulations for 24 individuals. FMCSA has statutory authority to exempt individuals from the vision requirement if the exemptions granted will not compromise safety. The Agency has concluded that granting these exemption renewals will provide a level of safety that is equivalent to or greater than the level of safety maintained without the exemptions for these commercial motor vehicle (CMV) drivers.

DATES: This decision is effective November 28, 2011. Comments must be received on or before December 12, 2011.

ADDRESSES: You may submit comments bearing the Federal Docket Management System (FDMS) numbers: FMCSA–1999–5578; FMCSA–2004–19477; FMCSA–2005–21711; FMCSA–2007–27897; FMCSA–2007–29019; FMCSA–2009–0154, using any of the following methods:

- *Federal eRulemaking Portal:* Go to *http://www.regulations.gov*. Follow the on-line instructions for submitting comments.
- *Mail:* Docket Management Facility; U.S. Department of Transportation, 1200 New Jersey Avenue SE., West Building Ground Floor, Room W12–140, Washington, DC 20590–0001.
- *Hand Delivery or Courier:* West Building Ground Floor, Room W12–140, 1200 New Jersey Avenue SE., Washington, DC, between 9 a.m. and 5 p.m., Monday through Friday, except Federal Holidays.
- *Fax:* 1–(202) 493–2251.

Instructions: Each submission must include the Agency name and the docket number for this notice. Note that DOT posts all comments received without change to *http://www.regulations.gov*, including any personal information included in a comment. Please see the Privacy Act heading below.

Docket: For access to the docket to read background documents or comments, go to *http://www.regulations.gov* at any time or Room W12–140 on the ground level of the West Building, 1200 New Jersey Avenue SE., Washington, DC, between 9 a.m. and 5 p.m., Monday through Friday, except Federal holidays. The Federal Docket Management System (FDMS) is available 24 hours each day, 365 days each year. If you want acknowledgment that we received your comments, please include a self-addressed, stamped envelope or postcard or print the acknowledgement page that appears after submitting comments on-line.

Privacy Act: Anyone may search the electronic form of all comments received into any of our dockets by the name of the individual submitting the comment (or of the person signing the comment, if submitted on behalf of an association, business, labor union, etc.). You may review DOT's Privacy Act Statement for the FDMS published in the **Federal Register** on January 17, 2008 (73 FR 3316), or you may visit *http://edocket.access.gpo.gov/2008/pdf/E8-785.pdf*.

FOR FURTHER INFORMATION CONTACT: Elaine M. Papp, Chief, Medical Programs Division, (202) 366–4001, *fmcsamedical@dot.gov*, FMCSA, Department of Transportation, 1200 New Jersey Avenue SE., Room W64–224, Washington, DC 20590–0001. Office hours are from 8:30 a.m. to 5 p.m. Monday through Friday, except Federal holidays.

SUPPLEMENTARY INFORMATION:

Background

Under 49 U.S.C. 31136(e) and 31315, FMCSA may renew an exemption from the vision requirements in 49 CFR 391.41(b)(10), which applies to drivers of CMVs in interstate commerce, for a two-year period if it finds ''such exemption would likely achieve a level of safety that is equivalent to or greater than the level that would be achieved absent such exemption.'' The procedures for requesting an exemption (including renewals) are set out in 49 CFR part 381.

Exemption Decision

This notice addresses 24 individuals who have requested renewal of their exemptions in accordance with FMCSA procedures. FMCSA has evaluated these 24 applications for renewal on their merits and decided to extend each exemption for a renewable two-year period. They are:

Robert E. Bequeaith
Lloyd K. Brown
Larry Chinn
Kecia D. Clark-Welch
Tommy R. Crouse
Ben W. Davis
Charles A. DeKnikker, Sr.
Earl M. Frederick
Loren H. Geiken
John N. Guilford
John E. Halcomb
Rayford R. Harper
Michael A. Hershberger
Patrick J. Hogan, Jr.
Todd A. McBrian
Amilton T. Monteiro
Harold W. Mumford
John W. Myre
David G. Oakley
Charles D. Oestreich
John S. Olsen
Thomas J. Prusik
Brent L. Seaux
Glen W. Sterling

The exemptions are extended subject to the following conditions: (1) That each individual has a physical examination every year (a) by an ophthalmologist or optometrist who attests that the vision in the better eye continues to meet the standard in 49 CFR 391.41(b)(10), and (b) by a medical examiner who attests that the individual is otherwise physically qualified under 49 CFR 391.41; (2) that each individual provides a copy of the ophthalmologist's or optometrist's report to the medical examiner at the time of the annual medical examination; and (3) that each individual provide a copy of the annual medical certification to the employer for retention in the driver's qualification file and retains a copy of the certification on his/her person while driving for presentation to a duly authorized Federal, State, or local enforcement official. Each exemption will be valid for two years unless rescinded earlier by FMCSA. The exemption will be rescinded if: (1) The person fails to comply with the terms and conditions of the exemption; (2) the exemption has resulted in a lower level of safety than was maintained before it was granted; or (3) continuation of the exemption would not be consistent with the goals and objectives of 49 U.S.C. 31136(e) and 31315.

Basis for Renewing Exemptions

Under 49 U.S.C. 31315(b)(1), an exemption may be granted for no longer than two years from its approval date and may be renewed upon application for additional two year periods. In accordance with 49 U.S.C. 31136(e) and 31315, each of the 24 applicants has satisfied the entry conditions for obtaining an exemption from the vision requirements (64 FR 27027; 64 FR 51568; 66 FR 48504; 68 FR 54775; 69 FR 64806; 70 FR 2705; 70 FR 48797; 70 FR 53412; 70 FR 61493; 72 FR 1054; 72 FR 52422; 72 FR 58362; 72 FR 67344; 72 FR 84971; 74 FR 26464; 74 FR 37295; 74 FR 48343; 74 FR 57553; 74 FR 76439). Each of these 24 applicants has requested renewal of the exemption and has submitted evidence showing that the vision in the better eye continues to meet the standard specified at 49 CFR 391.41(b)(10) and that the vision impairment is stable. In addition, a review of each record of safety while driving with the respective vision deficiencies over the past two years indicates each applicant continues to meet the vision exemption requirements. These factors provide an adequate basis for predicting each driver's ability to continue to drive safely in interstate commerce. Therefore, FMCSA concludes that extending the exemption for each renewal applicant for a period of two years is likely to achieve a level of safety equal to that existing without the exemption.

Request for Comments

FMCSA will review comments received at any time concerning a particular driver's safety record and determine if the continuation of the exemption is consistent with the requirements at 49 U.S.C. 31136(e) and 31315. However, FMCSA requests that interested parties with specific data concerning the safety records of these drivers submit comments by December 12, 2011.

FMCSA believes that the requirements for a renewal of an exemption under 49 U.S.C. 31136(e) and 31315 can be satisfied by initially granting the renewal and then requesting and evaluating, if needed, subsequent comments submitted by interested parties. As indicated above, the Agency previously published notices of final disposition announcing its decision to exempt these 24 individuals from the vision requirement in 49 CFR 391.41(b)(10). The final decision to grant an exemption to each of these individuals was made on the merits of each case and made only after careful consideration of the comments received to its notices of applications. The notices of applications stated in detail the qualifications, experience, and medical condition of each applicant for an exemption from the vision requirements. That information is available by consulting the above cited **Federal Register** publications.

Interested parties or organizations possessing information that would otherwise show that any, or all, of these drivers are not currently achieving the statutory level of safety should immediately notify FMCSA. The Agency will evaluate any adverse evidence submitted and, if safety is being compromised or if continuation of the exemption would not be consistent with the goals and objectives of 49 U.S.C. 31136(e) and 31315, FMCSA will take immediate steps to revoke the exemption of a driver.

Issued on: October 28, 2011.

Larry W. Minor,

Associate Administrator for Policy.

[FR Doc. 2011–29162 Filed 11–9–11; 8:45 am]

BILLING CODE 4910–EX–P

DEPARTMENT OF TRANSPORTATION

Federal Motor Carrier Safety Administration

[Docket No. FMCSA–2011–0298]

Qualification of Drivers; Exemption Applications; Vision

AGENCY: Federal Motor Carrier Safety Administration (FMCSA), DOT.

ACTION: Notice of applications for exemptions; request for comments.

SUMMARY: FMCSA announces receipt of applications from 7 individuals for exemption from the vision requirement in the Federal Motor Carrier Safety Regulations. If granted, the exemptions would enable these individuals to qualify as drivers of commercial motor vehicles (CMVs) in interstate commerce without meeting the Federal vision requirement.

DATES: Comments must be received on or before December 12, 2011.

ADDRESSES: You may submit comments bearing the Federal Docket Management System (FDMS) Docket No. FMCSA–2011–0298 using any of the following methods:

- *Federal eRulemaking Portal:* Go to *http://www.regulations.gov*. Follow the online instructions for submitting comments.
- *Mail:* Docket Management Facility; U.S. Department of Transportation, 1200 New Jersey Avenue SE., West Building Ground Floor, Room W12–140, Washington, DC 20590–0001.
- *Hand Delivery:* West Building Ground Floor, Room W12–140, 1200 New Jersey Avenue SE., Washington, DC, between 9 a.m. and 5 p.m., Monday through Friday, except Federal Holidays.
- *Fax:* 1 (202) 493–2251.

Instructions: Each submission must include the Agency name and the

docket numbers for this notice. Note that all comments received will be posted without change to *http://www.regulations.gov,* including any personal information provided. Please see the Privacy Act heading below for further information.

Docket: For access to the docket to read background documents or comments, go to *http://www.regulations.gov* at any time or Room W12–140 on the ground level of the West Building, 1200 New Jersey Avenue SE., Washington, DC, between 9 a.m. and 5 p.m., Monday through Friday, except Federal holidays. The FDMS is available 24 hours each day, 365 days each year. If you want acknowledgment that we received your comments, please include a self-addressed, stamped envelope or postcard or print the acknowledgement page that appears after submitting comments online.

Privacy Act: Anyone may search the electronic form of all comments received into any of our dockets by the name of the individual submitting the comment (or of the person signing the comment, if submitted on behalf of an association, business, labor union, etc.). You may review DOT's Privacy Act Statement for the FDMS published in the **Federal Register** on January 17, 2008 (73 FR 3316), or you may visit *http://edocket.access.gpo.gov/2008/pdf/E8–785.pdf.*

FOR FURTHER INFORMATION CONTACT: Elaine M. Papp, Chief, Medical Programs Division, (202) 366–4001, *fmcsamedical@dot.gov,* FMCSA, Department of Transportation, 1200 New Jersey Avenue SE., Room W64–224, Washington, DC 20590–0001. Office hours are from 8:30 a.m. to 5 p.m., Monday through Friday, except Federal holidays.

SUPPLEMENTARY INFORMATION:

Background

Under 49 U.S.C. 31136(e) and 31315, FMCSA may grant an exemption from the Federal Motor Carrier Safety Regulations for a 2-year period if it finds ''such exemption would likely achieve a level of safety that is equivalent to or greater than the level that would be achieved absent such exemption.'' FMCSA can renew exemptions at the end of each 2-year period. The 7 individuals listed in this notice have each requested such an exemption from the vision requirement in 49 CFR 391.41(b)(10), which applies to drivers of CMVs in interstate commerce. Accordingly, the Agency will evaluate the qualifications of each applicant to determine whether granting an exemption will achieve the required level of safety mandated by statute.

Qualifications of Applicants

Adam O. Carson

Mr. Carson, age 29, has had retinopathy in his left eye since birth. The best corrected visual acuity in his right eye 20/30 and in his left eye, light perception. Following an examination in 2011, his ophthalmologist noted, ''I believe that his vision is sufficient to perform his driving tasks required to operate a commercial vehicle.'' Mr. Carson reported that he has driven straight trucks for 9.4 years, accumulating 18,800 miles. He holds a Class D operator's license from Mississippi. His driving record for the last 3 years shows no crashes and no convictions for moving violations in a CMV.

Michael P. Eisenreich

Mr. Eisenreich, 47, has a prosthetic left eye due to a traumatic injury sustained in 1984. The best corrected visual acuity in his right eye 20/20. Following an examination in 2011, his optometrist noted, ''I certify that in my opinion that he can safely perform the driving tasks required to operate a commercial vehicle.'' Mr. Eisenreich reported that he has driven tractor-trailer combinations for 5 years, accumulating 195,000 miles. He holds a Class A Commercial Driver's License (CDL) from Minnesota. His driving record for the last 3 years shows no crashes and no convictions for moving violations in a CMV.

Carlton G. Frank

Mr. Frank, 49, has had central scarring in his left eye since 2006. The best corrected visual acuity in his right eye 20/15 and in his left eye, 20/60. Following an examination in 2011, his optometrist noted, ''In summary, Mr. Frank's condition remains stable, and he has sufficient vision to perform driving tasks required to operate a commercial vehicle.'' Mr. Frank reported that he has driven buses for 3 years, accumulating 66,000 miles. He holds a Class B CDL from Florida. His driving record for the last 3 years shows no crashes and no convictions for moving violations in a CMV.

Roger W. Hammock

Mr. Hammock, 43, has had amblyopia in his right eye since childhood. The best corrected visual acuity in his right eye 20/70 and in his left eye, 20/20. Following an examination in 2011, his optometrist noted, ''In my medical opinion, Roger Hammock has sufficient vision to perform the driving tasks required to operate a commercial vehicle.'' Mr. Hammock reported that he has driven straight trucks for 17 years, accumulating 601,120 miles. He holds a Class D operator's license from Alabama. His driving record for the last 3 years shows no crashes and no convictions for moving violations in a CMV.

John T. Thor

Mr. Thor, 70, has had malignant melanoma in his right eye since the mid 1990's. The best corrected visual acuity in his right eye 20/500 and in his left eye, 20/20. Following an examination in 2011, his optometrist noted, ''In my opinion, Mr. John Thor has adequate vision to perform the tasks required to operate a commercial vehicle.'' Mr. Thor reported that he has driven straight trucks for 50 years, accumulating 500,000 miles and tractor-trailer combinations for 6 years, accumulating 360,000 miles. He holds a Class A CDL from Minnesota. His driving record for the last 3 years shows 1 crash, due to weather, and no convictions for moving violations in a CMV.

George Ulferts

Mr. Ulferts, 46, has had a completely detached retina in his left eye since February of 2008. The best corrected visual acuity in his right eye 20/20 and in his left eye, light perception. Following an examination in 2011, his optometrist noted, ''It is of medical opinion that Mr. Ulfrets has the appropriate level of acuity in his right eye to sufficiently perform the driving tasks required to operate a commercial vehicle.'' Mr. Ulfrets reported that he has driven straight trucks for 25 years, accumulating 625,000 miles. He holds a Class D operator's license from Iowa. His driving record for the last 3 years shows no crashes and no convictions for moving violations in a CMV.

Donald F. Wilton

Mr. Wilton, 42, has had amblyopia in his left eye since childhood. The best corrected visual acuity in his right eye 20/20 and in his left eye, 20/70. Following an examination in 2011, his optometrist noted, ''I certify that Mr. Wilton shows sufficient vision to operate a commercial vehicle.'' Mr. Wilton reported that he has driven tractor-trailer combinations for 23 years, accumulating 2.3 million miles. He holds a Class A CDL from California. His driving record for the last 3 years shows no crashes, but one conviction for a moving violation in a CMV; failure to stop at a traffic signal.

Request for Comments

In accordance with 49 U.S.C. 31136(e) and 31315, FMCSA requests public comment from all interested persons on the exemption petitions described in this notice. The Agency will consider all comments received before the close of business December 12, 2011. Comments will be available for examination in the docket at the location listed under the **ADDRESSES** section of this notice. The Agency will file comments received after the comment closing date in the public docket, and will consider them to the extent practicable.

In addition to late comments, FMCSA will also continue to file, in the public docket, relevant information that becomes available after the comment closing date. Interested persons should monitor the public docket for new material.

Issued on: November 3, 2011.

Larry W. Minor,

Associate Administrator for Policy.

[FR Doc. 2011–29160 Filed 11–9–11; 8:45 am]

BILLING CODE 4910–EX–P

DEPARTMENT OF TRANSPORTATION

Federal Motor Carrier Safety Administration

[Docket No. FMCSA–1999–5748; FMCSA–1999–5578; FMCSA–2002–12844; FMCSA–2003–15892; FMCSA–2005–21711]

Qualification of Drivers; Exemption Applications; Vision

AGENCY: Federal Motor Carrier Safety Administration (FMCSA), DOT.

ACTION: Notice of renewal of exemptions; request for comments.

SUMMARY: FMCSA announces its decision to renew the exemptions from the vision requirement in the Federal Motor Carrier Safety Regulations for 20 individuals. FMCSA has statutory authority to exempt individuals from the vision requirement if the exemptions granted will not compromise safety. The Agency has concluded that granting these exemption renewals will provide a level of safety that is equivalent to or greater than the level of safety maintained without the exemptions for these commercial motor vehicle (CMV) drivers.

DATES: This decision is effective November 30, 2011. Comments must be received on or before December 12, 2011.

ADDRESSES: You may submit comments bearing the Federal Docket Management System (FDMS) numbers: FMCSA–1999–5748; FMCSA–1999–5578; FMCSA–2002–12844; FMCSA–2003–15892; FMCSA–2005–21711, using any of the following methods:

- *Federal eRulemaking Portal:* Go to *http://www.regulations.gov.* Follow the on-line instructions for submitting comments.
- *Mail:* Docket Management Facility; U.S. Department of Transportation, 1200 New Jersey Avenue SE., West Building Ground Floor, Room W12–140, Washington, DC 20590–0001.
- *Hand Delivery or Courier:* West Building Ground Floor, Room W12–140, 1200 New Jersey Avenue SE., Washington, DC, between 9 a.m. and 5 p.m., Monday through Friday, except Federal Holidays.
- *Fax:* 1–(202) 493–2251.

Instructions: Each submission must include the Agency name and the docket number for this notice. Note that DOT posts all comments received without change to *http://www.regulations.gov,* including any personal information included in a comment. Please see the Privacy Act heading below.

Docket: For access to the docket to read background documents or comments, go to *http://www.regulations.gov* at any time or Room W12–140 on the ground level of the West Building, 1200 New Jersey Avenue SE., Washington, DC, between 9 a.m. and 5 p.m., Monday through Friday, except Federal holidays. The Federal Docket Management System (FDMS) is available 24 hours each day, 365 days each year. If you want acknowledgment that we received your comments, please include a self-addressed, stamped envelope or postcard or print the acknowledgement page that appears after submitting comments on-line.

Privacy Act: Anyone may search the electronic form of all comments received into any of our dockets by the name of the individual submitting the comment (or of the person signing the comment, if submitted on behalf of an association, business, labor union, *etc.*). You may review DOT's Privacy Act Statement for the FDMS published in the **Federal Register** on January 17, 2008 (73 FR 3316), or you may visit *http://www.edocket.access.gpo.gov/2008/pdf/E8-785.pdf.*

FOR FURTHER INFORMATION CONTACT: Elaine M. Papp, Chief, Medical Programs, (202) 366–4001, *fmcsamedical@dot.gov,* FMCSA, Department of Transportation, 1200 New Jersey Avenue SE., Room W64–224, Washington, DC 20590–0001. Office hours are from 8:30 a.m. to 5 p.m. Monday through Friday, except Federal holidays.

SUPPLEMENTARY INFORMATION:

Background

Under 49 U.S.C. 31136(e) and 31315, FMCSA may renew an exemption from the vision requirements in 49 CFR 391.41(b)(10), which applies to drivers of CMVs in interstate commerce, for a two-year period if it finds ''such exemption would likely achieve a level of safety that is equivalent to or greater than the level that would be achieved absent such exemption.'' The procedures for requesting an exemption (including renewals) are set out in 49 CFR part 381.

Exemption Decision

This notice addresses 20 individuals who have requested renewal of their exemptions in accordance with FMCSA procedures. FMCSA has evaluated these 20 applications for renewal on their merits and decided to extend each exemption for a renewable two-year period. They are:

Thomas E. Adams
Terry J. Aldridge
Lennie D. Baker, Jr.
Jerry D. Bridges
William J. Corder
Gary R. Gutschow
James J. Hewitt
Albert E. Malley
Eugene P. Martin
David L. Menken
Rodney M. Mimbs
Walter F. Moniowczak
William G. Mote
James R. Murphy
Chris A. Ritenour
Ronald L. Roy
Thaoms D. Walden
Thomas E. Walsh
Kevin P. Weinhold
Thomas A. Wise

The exemptions are extended subject to the following conditions: (1) That each individual has a physical examination every year (a) by an ophthalmologist or optometrist who attests that the vision in the better eye continues to meet the requirements in 49 CFR 391.41(b)(10), and (b) by a medical examiner who attests that the individual is otherwise physically qualified under 49 CFR 391.41; (2) that each individual provides a copy of the ophthalmologist's or optometrist's report to the medical examiner at the time of the annual medical examination; and (3) that each individual provide a copy of the annual medical certification to the employer for retention in the driver's qualification file and retains a copy of the certification on his/her

person while driving for presentation to a duly authorized Federal, State, or local enforcement official. Each exemption will be valid for two years unless rescinded earlier by FMCSA. The exemption will be rescinded if: (1) The person fails to comply with the terms and conditions of the exemption; (2) the exemption has resulted in a lower level of safety than was maintained before it was granted; or (3) continuation of the exemption would not be consistent with the goals and objectives of 49 U.S.C. 31136(e) and 31315.

Basis for Renewing Exemptions

Under 49 U.S.C. 31315(b)(1), an exemption may be granted for no longer than two years from its approval date and may be renewed upon application for additional two year periods. In accordance with 49 U.S.C. 31136(e) and 31315, each of the 20 applicants has satisfied the entry conditions for obtaining an exemption from the vision requirements (64 FR 27027; 64 FR 40404; 64 FR 51568; 64 FR 66962; 66 FR 63289; 67 FR 68719; 68 FR 2629; 68 FR 52811; 68 FR 61860; 68 FR 64944;70 FR 48797; 70 FR 61165; 70 FR 61493;70 FR 67776; 74 FR 62632). Each of these 20 applicants has requested renewal of the exemption and has submitted evidence showing that the vision in the better eye continues to meet the requirement specified at 49 CFR 391.41(b)(10) and that the vision impairment is stable. In addition, a review of each record of safety while driving with the respective vision deficiencies over the past two years indicates each applicant continues to meet the vision exemption requirements. These factors provide an adequate basis for predicting each driver's ability to continue to drive safely in interstate commerce. Therefore, FMCSA concludes that extending the exemption for each renewal applicant for a period of two years is likely to achieve a level of safety equal to that existing without the exemption.

Request for Comments

FMCSA will review comments received at any time concerning a particular driver's safety record and determine if the continuation of the exemption is consistent with the requirements at 49 U.S.C. 31136(e) and 31315. However, FMCSA requests that interested parties with specific data concerning the safety records of these drivers submit comments by December 12, 2011.

FMCSA believes that the requirements for a renewal of an exemption under 49 U.S.C. 31136(e) and 31315 can be satisfied by initially granting the renewal and then requesting and evaluating, if needed, subsequent comments submitted by interested parties. As indicated above, the Agency previously published notices of final disposition announcing its decision to exempt these 20 individuals from the vision requirement in 49 CFR 391.41(b)(10). The final decision to grant an exemption to each of these individuals was made on the merits of each case and made only after careful consideration of the comments received to its notices of applications. The notices of applications stated in detail the qualifications, experience, and medical condition of each applicant for an exemption from the vision requirements. That information is available by consulting the above cited **Federal Register** publications.

Interested parties or organizations possessing information that would otherwise show that any, or all, of these drivers are not currently achieving the statutory level of safety should immediately notify FMCSA. The Agency will evaluate any adverse evidence submitted and, if safety is being compromised or if continuation of the exemption would not be consistent with the goals and objectives of 49 U.S.C. 31136(e) and 31315, FMCSA will take immediate steps to revoke the exemption of a driver.

Issued on: October 28, 2011.

Larry W. Minor,

Associate Administrator for Policy.

[FR Doc. 2011–29153 Filed 11–9–11; 8:45 am]

BILLING CODE 4910–EX–P

DEPARTMENT OF TRANSPORTATION

Maritime Administration

[Docket No. MARAD–2011 0146]

Requested Administrative Waiver of the Coastwise Trade Laws; Vessel REEL ATTITUDE; Invitation for Public Comments

AGENCY: Maritime Administration, Department of Transportation.

ACTION: Notice.

SUMMARY: As authorized by 46 U.S.C. 12121, the Secretary of Transportation, as represented by the Maritime Administration (MARAD), is authorized to grant waivers of the U.S.-build requirement of the coastwise laws under certain circumstances. A request for such a waiver has been received by MARAD. The vessel, and a brief description of the proposed service, is listed below.

DATES: Submit comments on or before December 12, 2011.

ADDRESSES: Comments should refer to docket number MARAD–2011–0146. Written comments may be submitted by hand or by mail to the Docket Clerk, U.S. Department of Transportation, Docket Operations, M–30, West Building Ground Floor, Room W12–140, 1200 New Jersey Avenue SE., Washington, DC 20590. You may also send comments electronically via the Internet at *http://www.regulations.gov.* All comments will become part of this docket and will be available for inspection and copying at the above address between 10 a.m. and 5 p.m., E.T., Monday through Friday, except federal holidays. An electronic version of this document and all documents entered into this docket is available on the World Wide Web at *http://www.regulations.gov.*

FOR FURTHER INFORMATION CONTACT: Joann Spittle, U.S. Department of Transportation, Maritime Administration, 1200 New Jersey Avenue SE., Room W21–203, Washington, DC 20590. Telephone (202) 366–5979, Email *Joann.Spittle@dot.gov.*

SUPPLEMENTARY INFORMATION: As described by the applicant the intended service of the vessel REEL ATTITUDE is:

Intended Commercial Use of Vessel: ''Fishing Charter passenger less than 6.''

Geographic Region: ''Maryland.''

The complete application is given in DOT docket MARAD–2011–0146 at *http://www.regulations.gov.* Interested parties may comment on the effect this action may have on U.S. vessel builders or businesses in the U.S. that use U.S.-flag vessels. If MARAD determines, in accordance with 46 U.S.C. 12121 and MARAD's regulations at 46 CFR part 388, that the issuance of the waiver will have an unduly adverse effect on a U.S.-vessel builder or a business that uses U.S.-flag vessels in that business, a waiver will not be granted. Comments should refer to the docket number of this notice and the vessel name in order for MARAD to properly consider the comments. Comments should also state the commenter's interest in the waiver application, and address the waiver criteria given in 388.4 of MARAD's regulations at 46 CFR part 388.

Privacy Act

Anyone is able to search the electronic form of all comments received into any of our dockets by the name of the individual submitting the comment (or signing the comment, if submitted on behalf of an association, business, labor union, etc.). You may

review DOT's complete Privacy Act Statement in the **Federal Register** published on April 11, 2000 (Volume 65, Number 70; Pages 19477–78).

Dated: November 3, 2011.

By Order of the Maritime Administrator.

Julie P. Agarwal,

Secretary, Maritime Administration.

[FR Doc. 2011–29156 Filed 11–9–11; 8:45 am]

BILLING CODE 4910–81–P

DEPARTMENT OF TRANSPORTATION

Pipeline and Hazardous Materials Administration

[Docket No. PHMSA–2008–0291]

Pipeline Safety: Information Collection Activities

ACTION: Request for public comments and OMB approval of new Information Collection.

AGENCY: Pipeline and Hazardous Materials Safety Administration

SUMMARY: On December 13, 2010, in accordance with the Paperwork Reduction Act of 1995, the Pipeline and Hazardous Materials Safety Administration (PHMSA) published a notice in the **Federal Register** of its intent to create a national registry of pipeline and liquefied natural gas (LNG) operators. PHMSA received one comment in response to that notice. PHMSA is publishing this notice to respond to the comment, to provide the public with an additional 30 days to comment on the proposed revisions to the operator registry forms, including the form instructions, and to announce that the revised Information Collections will be submitted to the Office of Management and Budget for approval.

DATES: Comments on this notice must be received by December 12, 2011 to be assured of consideration.

FOR FURTHER INFORMATION CONTACT: Angela Dow by telephone at (202) 366–1246, by fax at (202) 366–4566, by email at *Angela.Dow@dot.gov,* or by mail at U.S. Department of Transportation, Pipeline and Hazardous Materials Safety Administration, 1200 New Jersey Avenue SE., PHP–30, Washington, DC 20590–0001.

ADDRESSES: You may submit comments identified by the docket number PHMSA–2008–0291 by any of the following methods:

- *Federal eRulemaking Portal: http://www.regulations.gov.* Follow the online instructions for submitting comments.
- *Fax:* 1 (202) 395–6566.
- *Mail:* Office of Information and Regulatory Affairs, Office of Management and Budget, 726 Jackson Place NW., Washington, DC 20503, ATTN: Desk Officer for the U.S. Department of Transportation.
- *Email:* Office of Information and Regulatory Affairs, Office of Management and Budget, at the following address: *oira_submissions@omb.eop.gov.*

Requests for a copy of the Information Collection should be directed to Angela Dow by telephone at (202) 366–1246, by fax at (202) 366–4566, by email at *Angela.Dow@dot.gov,* or by mail at U.S. Department of Transportation, PHMSA, 1200 New Jersey Avenue SE., PHP–30, Washington, DC 20590–0001.

SUPPLEMENTARY INFORMATION: Section 1320.8(d), Title 5, Code of Federal Regulations requires PHMSA to provide interested members of the public and affected agencies an opportunity to comment on information collection and recordkeeping requests. This notice identifies a new information collection request that PHMSA will be submitting to OMB for approval. The information collection will be titled: ''National Registry of Pipeline and Liquefied Natural Gas Operators.'' PHMSA published a final rule in the **Federal Register** on November 26, 2010 (75 FR 72878), titled ''Pipeline Safety: Updates to Pipeline and Liquefied Natural Gas Reporting Requirements.'' That final rule added two new sections, 49 CFR 191.22 and 195.64, to the pipeline safety regulations for the establishment of a ''National Registry of Pipeline and Liquefied Natural Gas Operators,'' which will be used by operators to obtain an Operator Identification (OPID) number. The following information is provided for each information collection: (1) Title of the information collection; (2) Office of Management and Budget (OMB) control number; (3) Type of request; (4) Abstract of the information collection activity; (5) Description of affected public; (6) Estimate of total annual reporting and recordkeeping burden; and (7) Frequency of collection. PHMSA will request a three-year term of approval for each information collection activity.

The comments are summarized and addressed below as specified in the following outline:

I. Background
II. Summary of Comments/Topics
III. Proposed Information Collection Revisions and Request for Comments

I. Background

PHMSA published a final rule in the **Federal Register** on November 26, 2010, (75 FR 72878), titled ''Pipeline Safety: Updates to Pipeline and Liquefied Natural Gas Reporting Requirements.'' That final rule added two new sections, 49 CFR 191.22 and 195.64, to the pipeline safety regulations for the establishment of a national pipeline operator registry, which will be used by operators to obtain an Operator Identification (OPID) number. PHMSA is proposing to use two forms as part of this information collection. When an operator requests an initial OPID number, an online form titled ''OPID Assignment Request (PHMSA F 1000.1)'' will be used. For an operator notifying PHMSA of certain required changes associated with an OPID (see 49 CFR 191.22 and 195.64) or for operators updating their OPID information, a form titled ''Operator Registry Notification (PHMSA F 1000.2)'' will be used. Copies of these forms have been placed in the docket and are available for comment.

II. Summary of Comments/Topics

During the two month response period, PHMSA received a combined comment from American Petroleum Institute (API) and American Oil Pipelines Association (AOPL) on the proposal outlined in the December 2010 **Federal Register** notice.

A. OPID Assignment Request (Form PHMSA F 1000.1)

A1. API–AOPL noted that Step 1, ''Enter Basic Information,'' incorrectly implies that some rural low-stress hazardous liquid pipelines are not subject to part 195 although they are required to submit reports under Subpart B. They noted that being subject to Subpart B is being subject to Part 195. They also note that this step incorrectly implies that unregulated rural gathering lines are subject to reporting requirements.

Response: PHMSA agrees and has revised and reordered the elements of Question 1 in this step to better align these elements with the degree to which pipelines are subject to part 195.

A2. In Step 2, API–AOPL requested clarification of the term ''vessels'' in the item ''Hazardous Liquid Breakout Tanks → Total Number of Tanks/Caverns/Vessels.''

Response: This item meant to indicate that the operator should report the total number of tanks, caverns, or other containers (*i.e.,* vessels) that serve as breakout tanks. PHMSA agrees that the term ''vessels,'' is not used elsewhere and could cause confusion. PHMSA also concludes that the intended clarification is unnecessary and has revised this item to indicate only that operators should report the total number of breakout tanks.

A3. API–AOPL commented that identifying all counties through which a pipeline passes will be an additional reporting burden. They suggested that a drop-down list including all counties in each state be provided as part of the online reporting system.

Response: PHMSA agrees and will include drop-down lists in the online reporting system to facilitate providing this information.

A4. API–AOPL pointed out a formatting error in that the statement at the bottom of each page indicating that a step continues did not always refer to the correct question number.

Response: PHMSA has revised the form to fix this error.

A5. API–AOPL asked that PHMSA clarify the reason for requesting right-of-way miles as well as pipeline miles (Step 2, Question 3). They noted that not all companies calculate right-of-way miles for business purposes and that reporting this information could result in additional burden.

Response: PHMSA has agreed to remove the question concerning right-of-way miles.

A6. Step 2, Question 4, asks for a brief description of the pipelines/facilities covered by an OPID assignment request. API–AOPL noted that the amount of detail to be provided in this description is not clear and suggested that PHMSA include examples in the instructions. They noted that this form is applicable to hazardous liquid pipelines and gas pipelines as well as LNG facilities and requested that the examples address all of these types of facilities.

Response: PHMSA agrees that examples for each facility type would be useful and has included them in the revised instructions.

A7. Step 3 collects information concerning PHMSA-required safety programs. Pipeline operators with systems covered by multiple OPIDs often manage these as common programs covering all (or multiple) OPIDs. This step asks that the operator designate the ''primary'' OPID for each program. API–AOPL requested clarification as to how the designation of an OPID as ''primary'' is to be made.

Response: This ''primary'' OPID designation is intended to represent the OPID that should be the focus of PHMSA inspection activities covering the specific safety program in question. As such, it should be the OPID under which that particular safety program is managed or administered, and typically will be associated with the physical location where the main documentation and description of the safety program exist. (For example, if the pipelines covered by an OPID assignment request for OPID 67890 are part of an Integrity Management Program that is administered by the operator under its existing OPID 12345, then the primary OPID would be 12345). The designation of which multiple OPIDs is ''primary'' is at the operator's discretion, but it is important that once a particular OPID is selected as ''primary,'' the operator continue to list this same OPID as ''primary'' in future notifications concerning the safety program in question. PHMSA has clarified this in the instructions.

A8. Step 4, Question 1, asks for information about the ''operator contact responsible for assuring compliance'' with PHMSA regulations. API–AOPL noted that several personnel could fit this description and requested additional clarification.

Response: PHMSA agrees that this description was vague. Ultimately, any operator personnel who perform or manage work required by the regulations have some responsibility for assuring compliance. This question was intended to collect information regarding the person who oversees compliance and typically is the principal contact with PHMSA to discuss regulatory issues. This would include such titles as ''Manager of Compliance,'' ''Regulatory Compliance Officer,'' ''DOT Compliance Supervisor,'' ''Pipeline Safety Manager,'' *etc.* PHMSA has revised the form to state ''operator contact responsible for overseeing compliance'' and has included these position titles as examples in the instructions.

A9. API–AOPL requested that the contact information collected in Step 4 be kept confidential.

Response: PHMSA does not intend to make this information publicly available. It could be subject to release under a Freedom of Information Act request, but all such releases are subject to privacy exemptions in that Act and the Privacy Act.

A10. API–AOPL noted that the various ''contacts'' included in Step 4 are often located at a common address and asked that the form allow for entering this information only once.

Response: PHMSA has revised the online reporting system to allow designation of a common address for multiple contacts.

A11. API–AOPL requested that the online reporting system provide a simple mechanism for updating contact information for an OPID.

Response: PHMSA agrees that such a mechanism will be useful and has plans to incorporate such a mechanism in the near future.

A12. API–AOPL questioned whether this same form would be used to validate/collect information for existing OPIDs and requested that any such information collection be delayed until the on-line reporting system is available.

Response: 49 CFR 191.22(b) and 195.64(b) require validation of information for existing OPIDs by gas pipeline/LNG operators and hazardous liquid pipeline operators, respectively. This same form will be used for that purpose. PHMSA is planning for the on-line reporting system to be available to operators for validation purposes before validation is required.

B. Operator Registry Notification (Form PHMSA F 1000.2)

B1. API–AOPL noted that Step 1, Question 7, indicates the operator is to select only one type of facility and asked whether the form was to be completed multiple times for an operator with more than one type of facility covered by the same OPID. They also noted that Step 3, Question 1, allows operators to select all pipeline facility types that apply, in apparent contradiction to this limitation to one facility type.

Response: PHMSA has modified the form to allow operators to select all facility types that apply.

B2. API–AOPL requested that PHMSA clarify whether a separate form is required for each type of change listed in Step 2.

Response: No. Operators may report multiple types of changes in a single notification.

B3. API–AOPL requested clarification as to whether one or both operators must file a notification in the case of a transfer of assets. They also questioned whether the date to be reported should be the date on which ownership or operating responsibility is transferred in cases where they do not occur simultaneously.

Response: Both operators are required to file a notification in the event of a transfer of assets, each reporting the change affecting their OPID(s). The date should be the date operating responsibility is transferred. The instructions have been revised to clarify this.

B4. For changes involving the name of an operator (TYPE A) or the entity responsible for operation (TYPE B), the form asks an operator to enter the reason for the change. API–AOPL asked for justification for requiring this information and why reports are needed for this type of change when there is no simple mechanism for reporting smaller changes such as address or name of Senior Executive Officer.

Response: The operator of a pipeline facility is responsible for compliance with pipeline safety regulations. Accordingly, PHMSA's regulatory activities are focused on the operating entity. PHMSA thus needs to know whether changes of this type reflect a new operating entity. A change in name of operator can, for example, reflect a corporate re-branding or it can mean a more significant change in the operating company. A change in responsible entity could be due to a sale of assets or to a shift in responsibility from one subsidiary of a common parent company to another. The potential effect of these changes on continuity in responsibility for compliance would vary, and determine PHMSA's follow-up to the notification. This form only requires reporting of those changes where the regulations require that an operator notify PHMSA. Changes in address or contact information for key personnel are not required to be reported. PHMSA plans, however, to provide on-line means to report such changes in basic information in the near future.

B5. For several change types which involve changes in operating responsibility, the draft form included a question on whether the operator wanted PHMSA to deactivate the existing OPID. API–AOPL noted that only the holder of a specific OPID should be able to request deactivation.

Response: PHMSA agrees that only the holder of an OPID should be able to request deactivation and that this question should not be included on a form that will be completed by both parties involved in a transfer of responsibilities. PHMSA has deleted this question from the form. The question was not intended to result in automatic deactivation, but rather to prompt PHMSA to follow-up with the reporting operator. PHMSA will instead address the question of OPID deactivation as part of its normal contact with operators.

B6. API–AOPL asked for clarification concerning changes of TYPE D (acquisition/divestiture of 50 or more miles of pipe) and TYPE E (acquisition/divestiture of a pipeline facility). They noted, for example, that a ''pipeline facility'' may consist of only a few miles of pipe and questioned whether acquisition/divestiture of such a facility should be reported as TYPE E when a transaction involving the same mileage would not be reported as TYPE D.

Response: ''Pipeline facility'' is defined in both Parts 192 and 195 and includes ''new and existing pipelines, right-of-ways, and any equipment, facility, or building used in the transportation'' of the commodity. (Both definitions are included in the instructions under TYPE E.) API–AOPL is correct that the acquisition/divestiture of an entire pipeline consisting of only a few miles would need to be reported as TYPE E while acquisition/divestiture of the same amount of pipe that did not involve sale of a complete facility would not need to be reported. The difference reflects PHMSA's need for the information. PHMSA regulates the operator of a facility. If a complete facility changes hands, then PHMSA needs to update its records, inspection plans, *etc.,* to assure that appropriate attention is paid to the new operator. If, on the other hand, a larger operator acquires or divests itself of a few miles of pipe, significant changes in PHMSA oversight plans are not needed. PHMSA will obtain information about these changes through routine inspections and update its records/plans as appropriate. To reduce the aggregate reporting burden associated with this form, we will not require that operators report acquisition/divestiture of small amounts of pipe (< 50 miles). PHMSA has made changes to clarify these distinctions.

B7. Change TYPE F involves ''rehabilitation, replacement, modification, upgrade, uprate, or update of facilities, other than a section of line pipe that costs $10 million or more.'' API–AOPL requested clarification, including the basis for the stated exclusion. They asked if rehabilitation of line pipe costing more than $11 million would need to be reported.

Response: Construction-type changes are reported as either TYPE F or G. Pipeline operators continually construct/rehabilitate facilities, and routine activities of this type are addressed as part of PHMSA's routine inspection program. These notifications are to collect information on larger changes for which special inspections may be required. Thus, a reporting threshold was needed. For line pipe, a threshold based on miles of pipe to be constructed is appropriate. Cost is not an appropriate threshold for changes in line pipe because per-mile construction costs vary significantly depending on the environment in which construction is to occur (*e.g.,* rural vs. urban). A mileage threshold alone, however, would not identify other significant changes (*e.g.,* construction of a new pump/compressor station) for which construction inspections would be appropriate. Changes not involving construction of line pipe and which are expected to cost $10 million or more should be reported as TYPE F. Construction of 10 miles or more of line pipe, (including replacement of 10 or more miles of an existing pipeline) should be reported as TYPE G. Construction of line pipe costing more than $10 million but involving less than 10 miles need not be reported.

B8. Changes of TYPES F and G must be submitted 60 days before planned start of construction. API–AOPL noted that construction dates often slip. They questioned whether reported dates for anticipated start of work would need to be updated.

Response: No. As described above, the purpose of these notifications is for PHMSA to plan for inspections to be conducted during construction. Notifications of this type will prompt PHMSA to contact the operator to arrange for such inspections. PHMSA expects that the operator will keep PHMSA informed of changes in the anticipated date of field operations as part of these pre-inspection interactions.

B9. API–AOPL commented that it was inappropriate to include an operations question referring to maximum allowable operating pressure (MAOP) in an OPID data form (TYPE G).

Response: PHMSA disagrees. This question applies only to gas transmission pipelines and asks whether the new pipeline will use alternate MAOP under 49 CFR 192.620. Pipe to be operated at alternate MAOP is subject to many requirements not applicable to other pipelines and for which special inspections by PHMSA may be required. As noted above, the purpose for notifications of this type is for PHMSA to manage its inspection resources.

B10. API–AOPL commented that it was not clear which portions of Step 3 need to be completed for each change ''Type'' in Step 2.

Response: The on-line reporting system will be configured so that only those questions applicable to the change types selected in Question 2 will be presented for answers. This should resolve the confusion.

B11. Step 3, Question 4, asks for a brief description of the pipelines/facilities covered by this notification. API–AOPL asked that examples be included indicating the level of detail that PHMSA expects in these notifications.

Response: PHMSA has included examples in the instructions.

C. Comments Applicable to Both Forms

C1. API–AOPL noted that the paper forms are confusing, in large part because it is difficult to track which questions in later steps apply to specific change types selected in earlier steps. They suggested that PHMSA make

maximum use of on-line reporting, with the on-line system limiting the questions presented for completion, making maximum use of drop-down menus, *etc.*

Response: PHMSA agrees. The new regulation requires on-line reporting. The purpose of the paper form is to collect public comments. The on-line system will use ''smart navigation'' that will screen later questions based on information entered earlier. Drop down menus will be used whenever possible.

C2. API–AOPL expects the time it takes to complete the form to exceed the 15 minutes PHMSA proposed by up to three times as much.

Response: Completion of the OPID Assignment Request form is intended to be a one-time effort to collect as much as possible of the operator's information that PHMSA needs. Once this information is completed, PHMSA does not require the operator to undertake this effort again. The Operator Registry Notification form will be used to update any pertinent information that may have changed based on PHMSA's notification requirements since the OPID was originally issued. Operators will not have to complete the entire form. They will only update the section that is applicable to the change for which PHMSA is being notified. Given that most companies know this information prior to informing PHMSA, we estimate that the average time for completing these forms will be 15 minutes.

C3. API–AOPL commented that the forms request information not specified in the rule or discussed in the rulemaking (*e.g.,* the counties through which involved pipeline is routed). They noted that this could be construed as rulemaking without notice and comment.

Response: The rule did not specify the particular information that must be submitted for each type of notification. That is the purpose of these forms, and the forms have been subjected to notice and comment.

C4. API–AOPL suggested that PHMSA expand the instructions, where possible, to include more detail and specific examples. They noted that operators want to submit all of the information the agency needs and that more detailed instructions would help facilitate this.

Response: PHMSA appreciates API–AOPL's comments on these forms and pipeline operators' efforts to submit information as needed. PHMSA has revised the instructions to include more specificity and details. PHMSA invites stakeholders to submit suggestions for additional changes at any time, which will be considered for future revisions of these instructions.

D. Master Meter and Small Petroleum Gas Systems

The form will specify that operators of master meter systems or operators that solely operate petroleum gas systems which serve fewer than 100 customers from a single source (small petroleum gas operators) do not need to follow the Operator Registry requirements in 49 CFR 191.22 and 195.64. However, this exception does not extend to operators of these systems who also operate other system types. Small petroleum gas operators that do not have an OPID and are required to file an incident report will be able to request an OPID during the incident filing process.

III. Proposed Information Collection Revisions and Request for Comments

The forms to be created as a result of this information collection are the OPID Assignment Request form and the Operator Registry Notification form. The burden hours associated with these information collections are specified as follows:

Title of Information Collection: National Registry of Pipeline and Liquefied Natural Gas Operators.

OMB Control Number: Pending.

Type of Request: New information collection.

Abstract: PHMSA is requiring each operator to have an OPID number. The OPID number will contain detailed information on the operator. In addition, PHMSA is requiring that an operator provide PHMSA with update notifications for certain changes to information initially provided by the operator.

Affected Public: Pipeline Operators.

Recordkeeping:

Estimated Number of Respondents: 2,753.

Estimated Total Annual Burden Hours: 5,506.

Frequency of collection: On occasion.

Comments are invited on:

(a) The need for the proposed collection of information for the proper performance of the functions of the agency, including whether the information will have practical utility;

(b) The accuracy of the agency's estimate of the burden of the proposed collection of information, including the validity of the methodology and assumptions used;

(c) Ways to enhance the quality, utility, and clarity of the information to be collected; and

(d) Ways to minimize the burden of the collection of information on those who are to respond, including the use of appropriate automated, electronic, mechanical, or other technological collection techniques.

Issued in Washington, DC on November 3, 2011.

Jeffrey D. Wiese,

Associate Administrator for Pipeline Safety.

[FR Doc. 2011–29084 Filed 11–8–11; 8:45 am]

BILLING CODE 4910–60–P

DEPARTMENT OF TRANSPORTATION

Pipeline and Hazardous Materials Safety Administration

[Docket No. PHMSA–2011–0294 (PDA–35(R)]

New Jersey Regulations on Transportation of Regulated Medical Waste

AGENCY: Pipeline and Hazardous Materials Safety Administration (PHMSA), DOT.

ACTION: Public notice and invitation to comment.

SUMMARY: Interested parties are invited to comment on an application by the Healthcare Waste Institute (Institute) for an administrative determination as to whether Federal hazardous material transportation law preempts regulations of the New Jersey Department of Environmental Protection (NJDEP) which apply to the transportation of regulated medical waste in commerce, including the packaging of regulated medical waste for transportation; marking and labeling of containers of regulated medical waste offered for transportation or transported; the description of regulated medical waste on documents accompanying shipments of regulated medical waste and the use and retention of such documents; and the marking of vehicles which transport regulated medical waste.

DATES: Comments received on or before December 27, 2011 and rebuttal comments received on or before February 8, 2012 will be considered before an administrative determination is issued by PHMSA's Chief Counsel. Rebuttal comments may discuss only those issues raised by comments received during the initial comment period and may not discuss new issues.

ADDRESSES: The Institute's application and all comments received may be reviewed in the Docket Operations Facility (M–30), U.S. Department of Transportation, West Building Ground Floor, Room W12–140, 1200 New Jersey Avenue SE., Washington, DC 20590. The application and all comments are available on the U.S. Government Regulations.gov Web site: *http://www.regulations.gov.*

Comments must refer to Docket No. PHMSA–2011–0294 and may be

submitted by any of the following methods:

- *Federal eRulemaking Portal:* Go to *http://www.regulations.gov.* Follow the online instructions for submitting comments.
- *Fax:* 1–(202) 493–2251.
- *Mail:* Docket Operations Facility (M–30), U.S. Department of Transportation, West Building Ground Floor, Room W12–140, 1200 New Jersey Avenue SE., Washington, DC 20590.
- *Hand Delivery:* Docket Operations Facility (M–30), U.S. Department of Transportation, West Building Ground Floor, Room W12–140, 1200 New Jersey Avenue SE., Washington, DC 20590, between 9 a.m. and 5 p.m., Monday through Friday, except Federal holidays.

A copy of each comment must also be sent to (1) Alice P. Jacobson, Esq., Director, Healthcare Waste Institute, 4301 Connecticut Avenue NW., Suite 300, Washington, DC 20008, and (2) Mary Jo M. Aiello, Administrator, New Jersey Department of Environmental Protection, Solid and Hazardous Waste Management Program, Mail Code 401–02C, P.O. Box 420, Trenton, NJ 08625–0420. A certification that a copy has been sent to these persons must also be included with the comment. (The following format is suggested: ''I certify that copies of this comment have been sent to Mses. Jacobson and Aiello at the addresses specified in the **Federal Register**.'')

Anyone is able to search the electronic form of all comments received into any of our dockets by the name of the individual submitting the comment (or signing a comment submitted on behalf of an association, business, labor union, etc.). You may review DOT's complete Privacy Act Statement in the **Federal Register** published on April 11, 2000 (65 FR 19477–78), or you may visit *http://www.regulations.gov.*

A subject matter index of hazardous materials preemption cases, including a listing of all inconsistency rulings and preemption determinations, is available through PHMSA's home page at *http://www.phmsa.dot.gov.* From the home page, click on ''Hazmat Safety Community,'' then on ''Regulations,'' then on ''Preemption Documents'' under ''Chief Counsel's Decisions.'' A paper copy of the index will be provided at no cost upon request to Mr. Hilder, at the address and telephone number set forth in **FOR FURTHER INFORMATION CONTACT** below.

FOR FURTHER INFORMATION CONTACT: Frazer C. Hilder, Office of Chief Counsel (PHC–2), Pipeline and Hazardous Materials Safety Administration, U.S. Department of Transportation, 1200 New Jersey Avenue SE., Washington, DC 20590; telephone No. (202) 366–4400; facsimile No. (202) 366–7041.

SUPPLEMENTARY INFORMATION:

I. Application for a Preemption Determination

The Institute has applied to PHMSA for a determination whether Federal hazardous material transportation law, 49 U.S.C. 5101 *et seq.,* preempts requirements in Subchapter 3A of Title 7, Chapter 26 of the New Jersey Administrative Code, on the transportation of regulated medical waste in commerce regarding:

- Packaging regulated medical waste for transport off-site, in Sections 7:26–3A.10 (segregation of sharps, fluids (greater than 20 cc), and ''other'' regulated medical waste); 7:26–3A–11 (''oversized'' regulated medical waste that is ''too large to be placed in a plastic bag or standard container''); and 7:26–3A.27(g) (conditions when a transporter must comply with ''pre-transport'' requirements).
- Labeling and marking containers of regulated medical waste with additional information, in Sections 7:26–3A.14 and 7:26–3A.15, respectively, and 7:26–3A.28(c) (additional labeling by a ''subsequent transporter'' when ''regulated medical waste is handled by more than one transporter'').
- Preparation, use, and retention of a ''tracking form'' describing a shipment of regulated medical waste, in Sections 7:26–3A.19, 7:26–3A.21, 7:26–3A.28, 7:26–3A.31 through 7:26–3A.34, 7:26–3A.41, and (with respect to rail transporters) 7:26–3A–45 & 7:26–3A.46.[1]
- Preparation and retention of ''exception reports,'' in Sections 7:26–3A.21, 7:26–3A.22, and 7:26–3A.36.
- Marking a motor vehicle used to transport regulated medical waste with additional information, in Section 7:26–3A.30.

In summary, the Institute contends that these requirements are preempted because they are (1) not ''substantively the same as'' requirements in the Federal hazardous material transportation law or the Hazardous Materials Regulations (HMR), 49 CFR parts 171–180, on the transportation of regulated medical waste, or (2) otherwise an ''obstacle'' to accomplishing and carrying out Federal hazardous material transportation law and the HMR, as the NJDEP requirements are enforced and applied. The Institute notes that certain non-Federal requirements on the transportation of medical waste have been found to be preempted in Preemption Determination (PD) No. 23(RF), ''Morrisville, PA Requirements for Transportation of 'Dangerous Waste,''' 66 FR 37260 (July 17, 2001), decision on petition for reconsideration, 67 FR 2948 (Jan. 22, 2002), and PD–29(R), ''Massachusetts Requirements on the Storage and Disposal of Infectious or Physically Dangerous Medical or Biological Waste,'' 69 FR 34715 (June 22, 2004). As explained in those decisions, DOT regulates the transportation of regulated medical waste as a Division 6.2 hazardous material. PD–23(RF), 66 FR at 37260–61; PD–29(R), 69 FR at 34717.[2] *See also* 49 CFR 173.134(a)(5).

II. Federal Preemption

Section 5125 of 49 U.S.C. contains express preemption provisions relevant to this proceeding. As amended by Section 1711(b) of the Homeland Security Act of 2002 (Pub. L. 107–296, 116 Stat. 2320), 49 U.S.C. 5125(a) provides that a requirement of a State, political subdivision of a State, or Indian Tribe is preempted—unless the non-Federal requirement is authorized by another Federal law or DOT grants a waiver of preemption under § 5125(e)—if

> (1) Complying with a requirement of the State, political subdivision, or Tribe and a requirement of this chapter, a regulation prescribed under this chapter, or a hazardous materials transportation security regulation or directive issued by the Secretary of Homeland Security is not possible; or
>
> (2) The requirement of the State, political subdivision, or Tribe, as applied or enforced, is an obstacle to accomplishing and carrying out this chapter, a regulation prescribed under this chapter, or a hazardous materials transportation security regulation or directive issued by the Secretary of Homeland Security.

These two paragraphs set forth the ''dual compliance'' and ''obstacle'' criteria that PHMSA's predecessor agency, the Research and Special Programs Administration, had applied in issuing inconsistency rulings prior to 1990, under the original preemption provision in the Hazardous Materials Transportation Act (HMTA). Public Law 93–633 112(a), 88 Stat. 2161 (1975). The dual compliance and obstacle criteria

[1] In its application, the Institute refers to Section 7:26–3A.47 (''Alternative or innovative technology authorization''), but it seems clear that it meant to refer to Section 7:26–3A.46 (''Rail shipment tracking form requirements'').

[2] In 1991, after a two-year demonstration program, the U.S. Environmental Protection Agency (EPA) decided not to regulate medical waste, so that medical waste is not a ''hazardous waste'' under the Resource Conservation and Recovery Act, 42 U.S.C. 6901 *et seq. Id.*

are based on U.S. Supreme Court decisions on preemption. *Hines* v. *Davidowitz,* 312 U.S. 52 (1941); *Florida Lime & Avocado Growers, Inc.* v. *Paul,* 373 U.S. 132 (1963); *Ray* v. *Atlantic Richfield, Inc.,* 435 U.S. 151 (1978).

Subsection (b)(1) of 49 U.S.C. 5125 provides that a non-Federal requirement concerning any of the following subjects is preempted—unless authorized by another Federal law or DOT grants a waiver of preemption—when the non-Federal requirement is not ''substantively the same as'' a provision of Federal hazardous material transportation law, a regulation prescribed under that law, or a hazardous materials security regulation or directive issued by the Department of Homeland Security:

(A) The designation, description, and classification of hazardous material.

(B) The packing, repacking, handling, labeling, marking, and placarding of hazardous material.

(C) The preparation, execution, and use of shipping documents related to hazardous material and requirements related to the number, contents, and placement of those documents.

(D) The written notification, recording, and reporting of the unintentional release in transportation of hazardous material.

(E) The designing, manufacturing, fabricating, inspecting, marking, maintaining, reconditioning, repairing, or testing a package, container, or packaging component that is represented, marked, certified, or sold as qualified for use in transporting hazardous material.[3]

To be ''substantively the same,'' the non-Federal requirement must conform ''in every significant respect to the Federal requirement. Editorial and other similar de minimis changes are permitted.'' 49 CFR 107.202(d).[4]

The 2002 amendments and 2005 reenactment of the preemption provisions in 49 U.S.C. 5125 reaffirmed Congress's long-standing view that a single body of uniform Federal regulations promotes safety (including security) in the transportation of hazardous materials. More than thirty years ago, when it was considering the HMTA, the Senate Commerce Committee ''endorse[d] the principle of preemption in order to preclude a multiplicity of State and local regulations and the potential for varying as well as conflicting regulations in the area of hazardous materials transportation.'' S. Rep. No. 1102, 93rd Cong. 2nd Sess. 37 (1974). When Congress expanded the preemption provisions in 1990, it specifically found:

(3) Many States and localities have enacted laws and regulations which vary from Federal laws and regulations pertaining to the transportation of hazardous materials, thereby creating the potential for unreasonable hazards in other jurisdictions and confounding shippers and carriers which attempt to comply with multiple and conflicting registration, permitting, routing, notification, and other regulatory requirements,

(4) Because of the potential risks to life, property, and the environment posed by unintentional releases of hazardous materials, consistency in laws and regulations governing the transportation of hazardous materials is necessary and desirable,

(5) In order to achieve greater uniformity and to promote the public health, welfare, and safety at all levels, Federal standards for regulating the transportation of hazardous materials in intrastate, interstate, and foreign commerce are necessary and desirable.

Public Law 101–615 2, 104 Stat. 3244. (In 1994, Congress revised, codified and enacted the HMTA ''without substantive change,'' at 49 U.S.C. chapter 51. Public Law 103–272, 108 Stat. 745 (July 5, 1994).) A United States Court of Appeals has found uniformity was the ''linchpin'' in the design of the Federal laws governing the transportation of hazardous materials. *Colorado Pub. Util. Comm'n* v. *Harmon,* 951 F.2d 1571, 1575 (10th Cir. 1991).

III. Preemption Determinations

Under 49 U.S.C. 5125(d)(1), any person (including a State, political subdivision of a State, or Indian Tribe) directly affected by a requirement of a State, political subdivision or Tribe may apply to the Secretary of Transportation for a determination whether the requirement is preempted. The Secretary of Transportation has delegated authority to PHMSA to make determinations of preemption, except for those concerning highway routing (which have been delegated to the Federal Motor Carrier Safety Administration). 49 CFR 1.53(b).

Section 5125(d)(1) requires notice of an application for a preemption determination to be published in the **Federal Register**. Following the receipt and consideration of written comments, PHMSA publishes its determination in the **Federal Register**. See 49 CFR 107.209(c). A short period of time is allowed for filing of petitions for reconsideration. 49 CFR 107.211. A petition for judicial review of a final preemption determination must be filed in the United States Court of Appeals for the District of Columbia or in the Court of Appeals for the United States for the circuit in which the petitioner resides or has its principal place of business, within 60 days after the determination becomes final. 49 U.S.C. 5127(a).

Preemption determinations do not address issues of preemption arising under the Commerce Clause, the Fifth Amendment or other provisions of the Constitution, or statutes other than the Federal hazardous material transportation law unless it is necessary to do so in order to determine whether a requirement is authorized by another Federal law, or whether a fee is ''fair'' within the meaning of 49 U.S.C. 5125(f)(1). A State, local or Indian Tribe requirement is not authorized by another Federal law merely because it is not preempted by another Federal statute. *Colorado Pub. Util. Comm'n* v. *Harmon,* above, 951 F.2d at 1581 n.10.

In making preemption determinations under 49 U.S.C. 5125(d), PHMSA is guided by the principles and policies set forth in Executive Order No. 13132, entitled ''Federalism'' (64 FR 43255 (Aug. 10, 1999)), and the President's May 20, 2009 memorandum on ''Preemption'' (74 FR 24693 (May 22, 2009)). Section 4(a) of that Executive Order authorizes preemption of State laws only when a statute contains an express preemption provision, there is other clear evidence Congress intended to preempt State law, or the exercise of State authority directly conflicts with the exercise of Federal authority. The President's May 20, 2009 memorandum sets forth the policy ''that preemption of State law by executive departments and agencies should be undertaken only with full consideration of the legitimate prerogatives of the States and with a sufficient legal basis for preemption.'' Section 5125 contains express preemption provisions, which PHMSA has implemented through its regulations.

IV. Public Comments

All comments should be directed to whether 49 U.S.C. 5125 preempts the New Jersey regulations on the transportation of regulated medical waste in commerce. Comments should specifically address the preemption criteria discussed in Part II above.

[3] Subparagraph (E) was editorially revised in Sec. 7122(a) of the Hazardous Materials Transportation Safety and Security Reauthorization Act of 2005, which is Title VII of the Safe, Accountable, Flexible, Efficient Transportation Equity Act: A Legacy for Users (SAFETEA–LU), Public Law 109–59, 119. Stat. 1891 (Aug. 10, 2005). Technical corrections to cross-references in subsections (d), (e), and (g) were made in Public Law 110–244, Sec. 302(b), 122 Stat. 1618 (June 6, 2008).

[4] Additional standards apply to preemption of non-Federal requirements on highway routes over which hazardous materials may or may not be transported and fees related to transporting hazardous material. *See* 49 U.S.C. 5125(c) and (f). *See also* 49 CFR 171.1(f) which explains that a ''facility at which functions regulated under the HMR are performed may be subject to applicable laws and regulations of state and local governments and Indian tribes.''

Issued in Washington, DC, on November 7, 2011.

Vanessa L. Allen Sutherland,

Chief Counsel.

[FR Doc. 2011–29155 Filed 11–9–11; 8:45 am]

BILLING CODE 4910–60–P

DEPARTMENT OF TRANSPORTATION

Surface Transportation Board

[Docket No. AB 55 (Sub-No. 713X)]

CSX Transportation, Inc.—Abandonment Exemption—in Monroe County, AL

CSX Transportation, Inc. (CSXT), filed a verified notice of exemption under 49 CFR part 1152 subpart F—*Exempt Abandonments* to abandon an approximately 1.5-mile rail line on its Southern Region, Atlanta Division, Southern Alabama Subdivision, between mileposts 0RA 676.27 and 0RA 677.79 at the end of the track, in Hybart, Monroe County, AL. The line traverses United States Postal Service Zip Code 36481.

CSXT has certified that: (1) No local traffic has moved over the line for at least 2 years; (2) there is no overhead traffic on the line; (3) no formal complaint filed by a user of rail service on the line (or by a state or local government entity acting on behalf of such user) regarding cessation of service over the line either is pending with the Surface Transportation Board (Board) or with any U.S. District Court or has been decided in favor of complainant within the 2-year period; and (4) the requirements at 49 CFR 1105.7(c) (environmental report), 49 CFR 1105.11 (transmittal letter), 49 CFR 1105.12 (newspaper publication), and 49 CFR 1152.50(d)(1) (notice to governmental agencies) have been met.

As a condition to this exemption, any employee adversely affected by the abandonment shall be protected under *Oregon Short Line Railroad—Abandonment Portion Goshen Branch Between Firth & Ammon, in Bingham & Bonneville Counties, Idaho,* 360 I.C.C. 91 (1979). To address whether this condition adequately protects affected employees, a petition for partial revocation under 49 U.S.C. 10502(d) must be filed.

Provided no formal expression of intent to file an offer of financial assistance (OFA) has been received, this exemption will be effective on December 10, 2011, unless stayed pending reconsideration. Petitions to stay that do not involve environmental issues,[1] formal expressions of intent to file an OFA under 49 CFR 1152.27(c)(2),[2] and trail use/rail banking requests under 49 CFR 1152.29 must be filed by November 21, 2011. Petitions to reopen or requests for public use conditions under 49 CFR 1152.28 must be filed by November 30, 2011, with the Surface Transportation Board, 395 E Street SW., Washington, DC 20423–0001.

A copy of any petition filed with the Board should be sent to CSXT's representative: Louis E. Gitomer, 600 Baltimore Ave., Suite 301, Towson, MD 21204.

If the verified notice contains false or misleading information, the exemption is void *ab initio.*

CSXT has filed a combined environmental and historic report which addresses the effects, if any, of the abandonment on the environment and historic resources. OEA will issue an environmental assessment (EA) by November 15, 2011. Interested persons may obtain a copy of the EA by writing to OEA (Room 1100, Surface Transportation Board, Washington, DC 20423–0001) or by calling OEA at (202) 245–0305. Assistance for the hearing impaired is available through the Federal Information Relay Service at 1–(800) 877–8339. Comments on environmental and historic preservation matters must be filed within 15 days after the EA becomes available to the public.

Environmental, historic preservation, public use, or trail use/rail banking conditions will be imposed, where appropriate, in a subsequent decision.

Pursuant to the provisions of 49 CFR 1152.29(e)(2), CSXT shall file a notice of consummation with the Board to signify that it has exercised the authority granted and fully abandoned the line. If consummation has not been effected by CSXT's filing of a notice of consummation by November 10, 2012, and there are no legal or regulatory barriers to consummation, the authority to abandon will automatically expire.

Board decisions and notices are available on our Web site at *http://www.stb.dot.gov.*

Decided: November 4, 2011.

By the Board.

Rachel D. Campbell,

Director, Office of Proceedings.

Jeffrey Herzig,

Clearance Clerk.

[FR Doc. 2011–29095 Filed 11–9–11; 8:45 am]

BILLING CODE 4915–01–P

[1] The Board will grant a stay if an informed decision on environmental issues (whether raised by a party or by the Board's Office of Environmental Analysis (OEA) in its independent investigation) cannot be made before the exemption's effective date. *See Exemption of Out-of-Serv. Rail Lines,* 5 I.C.C.2d 377 (1989). Any request for a stay should be filed as soon as possible so that the Board may take appropriate action before the exemption's effective date.

[2] Each OFA must be accompanied by the filing fee, which is currently set at $1,500. *See* 49 CFR 1002.2(f)(25).

DEPARTMENT OF TRANSPORTATION

Surface Transportation Board

[Docket No. FD 35559]

Saratoga and North Creek Railway, LLC—Operation Exemption—Tahawus Line

Saratoga and North Creek Railway, LLC (Saratoga),[1] a Class III rail carrier, has filed a verified notice of exemption under 49 CFR 1150.41 to operate an approximately 29.71-mile line of railroad, known as the Tahawus Line. Saratoga states that the Tahawus Line currently is private track owned by NL Industries, Inc. (NL), an industrial concern which is selling the line to Saratoga in the very near future.[2] The rail line extends between the existing connection with Saratoga at milepost NC 0.0 at North Creek, N.Y., and its terminus at milepost NC 29.71 at Newcomb. Saratoga intends to provide common carrier rail service over the subject line connecting to its existing trackage at North Creek and extending to its connection with CP at Saratoga Springs.

Saratoga certifies that as a result of this transaction its projected annual

[1] Saratoga is a limited liability company, wholly owned by San Luis & Rio Grande Railroad (SLRG). SLRG is a Class III rail carrier and a subsidiary of Permian Basin Railways, Inc. (Permian), which in turn is owned by Iowa Pacific Holdings, LLC (IPH). IPH and Permian formed Saratoga for the purpose of operating the entire Tahawus Line between Newcomb, N.Y., on the north and Saratoga Springs, N.Y., on the south, interchanging traffic with the Delaware & Hudson Railway Company, Inc. d/b/a Canadian Pacific (CP) at Saratoga Springs. In 2 previous proceedings, the Board authorized Saratoga to operate between Saratoga Springs and North Creek. *See Saratoga & N. Creek Ry.—Acquis. & Operation Exemption—Del. & Hudson Ry.,* Docket No. FD 35500 (STB served June 1, 2011) and *Saratoga & N. Creek Ry., LLC—Operation Exemption—Warren Cnty., N.Y.,* Docket No. FD 35500 (Sub-No. 1) (STB served June 1, 2011).

[2] Saratoga states that the subject trackage is exempt from Board regulation and has never been operated in common carrier service and therefore it does not need any Board authority to acquire this trackage as such property is outside the Board's jurisdiction. Saratoga cites *B. Willis, C.P.A., Inc.—Petition for Declaratory Order,* FD No. 34013 (STB served Oct. 3, 2001) (*B. Willis*)., *aff'd sub nom. B. Willis, C.P.A., Inc.* v. *STB,* 51 Fed Appx. 321 (D.C. Cir. 2002) in support of this proposition. Saratoga states that it has executed an agreement to acquire the line from NL and that it anticipates consummating the acquisition before the exemption in this proceeding becomes effective.

revenues will not exceed $5 million and will not result in Saratoga becoming a Class I or Class II rail carrier.

Saratoga states that it intends to consummate the transaction at least 30 days from the effective date of the exemption (around late November 2011). The earliest this transaction can be consummated is November 24, 2011, the effective date of the exemption (30 days after the exemption was filed).

If the notice contains false or misleading information, the exemption is void *ab initio.* Petitions to revoke the exemption under 49 U.S.C. 10502(d) may be filed at any time. The filing of a petition to revoke will not automatically stay the transaction. Stay petitions must be filed no later than November 17, 2011 (at least 7 days before the exemption becomes effective).

An original and 10 copies of all pleadings, referring to Docket No. FD No. 35559, must be filed with the Surface Transportation Board, 395 E Street SW., Washington, DC 20423–0001. In addition, one copy of each pleading must be served on John D. Heffner, Strasburger & Price, 1700 K Street NW., Suite 640, Washington, DC 20006.

Board decisions and notices are available on our Web site at *http://www.stb.dot.gov*.

Decided: November 4, 2011.

By the Board.

Rachel D. Campbell,

Director, Office of Proceedings.

Jeffrey Herzig,

Clearance Clerk.

[FR Doc. 2011–29136 Filed 11–9–11; 8:45 am]

BILLING CODE 4915–01–P

DEPARTMENT OF THE TREASURY

Submission for OMB Review; Comment Request

November 4, 2011.

The Department of the Treasury will submit the following public information collection requirements to OMB for review and clearance under the Paperwork Reduction Act of 1995, Public Law 104–13 on or after the date of publication of this notice. A copy of the submissions may be obtained by calling the Treasury Bureau Clearance Officer listed. Comments regarding these information collections should be addressed to the OMB reviewer listed and to the Treasury PRA Clearance Officer, Department of the Treasury, 1750 Pennsylvania Avenue NW., Suite 11010, Washington, DC 20220.

DATES: Written comments should be received on or before December 12, 2011 to be assured consideration.

Internal Revenue Service (IRS)

OMB Number: 1545–0108.

Type of Review: Extension without change of a currently approved collection.

Title: Annual Summary and Transmittal of U.S. Information Returns.

Forms: 1096.

Abstract: Form 1096 is used to transmit information returns (Forms 1099, 1098, 5498, and W–2G) to the IRS Service Centers. Under IRC section 6041 and related sections, a separate Form 1096 is used for each type of return sent to the service center by the payer. It is used by IRS to summarize and categorize the transmitted forms.

Respondents: Private Sector: Businesses or other for-profits.

Estimated Total Burden Hours: 1,016,812.

OMB Number: 1545–0120.

Type of Review: Revision of a currently approved collection.

Title: Certain Government Payments.

Forms: 1099–G.

Abstract: Form 1099–G is used by governments (primarily state and local) to report to the IRS (and notify recipients of) certain payments (*e.g.,* unemployment compensation and income tax refunds). IRS uses the information to insure that the income is being properly reported by the recipients on their returns.

Respondents: State and local governments.

Estimated Total Burden Hours: 17,080,000.

OMB Number: 1545–0177.

Type of Review: Extension without change of a currently approved collection.

Title: Casualties and Thefts.

Form: 4684.

Abstract: Form 4684 is used by taxpayers to compute their gain or loss from casualties or thefts, and to summarize such gains and losses. The data is used to verify that the correct gain or loss has been computed.

Respondents: Individuals and Households.

Estimated Total Burden Hours: 1,486,659.

OMB Number: 1545–0235.

Type of Review: Revision of a currently approved collection.

Title: Monthly Tax Return for Wagers.

Forms: 730.

Abstract: Form 730 is used to identify taxable wagers and collect the tax monthly. The information is used to determine if persons accepting wagers are correctly reporting the amount of wagers and paying the required tax.

Respondents: Private Sector: Businesses or other for-profits.

Estimated Total Burden Hours: 418,362.

OMB Number: 1545–0619.

Type of Review: Revision of a currently approved collection.

Title: Credit for Increasing Research Activities.

Form: 6765.

Abstract: IRC section 38 allows a credit against income tax (determined under IRC section 41) for an increase in research activities in a trade or business. Form 6765 is used by businesses individuals engaged in a trade or business to figure and report the credit. The data is used to verify that the credit claimed is correct.

Respondents: Private Sector: Businesses or other for-profits.

Estimated Total Burden Hours: 285,281.

OMB Number: 1545–0748.

Type of Review: Extension without change of a currently approved collection.

Title: Employer Appointment of Agent.

Form: 2678.

Abstract: Title 26 U.S.C. 3504 authorizes an employer to designate a fiduciary, agent, etc., to perform the same acts as required of employers for purposes of employment taxes. Form 2678 is used by an employer to notify the Director, Internal Revenue Service Center, of the appointment of an agent to pay wages on behalf of the employer. In addition, the completed form is an authorization to withhold and pay taxes via Form 941, Employer's Quarterly Federal Tax Return, for the employees involved.

Respondents: Private Sector: Businesses or other for-profits, Not-for-profit institutions.

Estimated Total Burden Hours: 13,731,200.

OMB Number: 1545–0877.

Type of Review: Extension without change of a currently approved collection.

Title: Acquisition or Abandonment of Secured Property.

Form: 1099–A.

Abstract: Form 1099–A is used by persons who lend money in connection with a trade or business, and who acquire an interest in the property that is security for the loan or who have reason to know that the property has been abandoned, to report the acquisition or abandonment.

Respondents: Private Sector: Businesses or other for-profits.

Estimated Total Burden Hours: 61,817.

Bureau Clearance Officer: Yvette Lawrence, Internal Revenue Service, 1111 Constitution Avenue NW., Washington, DC 20224; (202) 927–4374

OMB Reviewer: Shagufta Ahmed, Office of Management and Budget, New Executive Office Building, Room 10235, Washington, DC 20503; (202) 395–7873.

Dawn D. Wolfgang,

Treasury PRA Clearance Officer.

[FR Doc. 2011–29099 Filed 11–9–11; 8:45 am]

BILLING CODE 4830–01–P

DEPARTMENT OF THE TREASURY

Internal Revenue Service

Advisory Council to the Internal Revenue Service; Meeting

AGENCY: Internal Revenue Service (IRS), Treasury.

ACTION: Notice.

SUMMARY: The Internal Revenue Service Advisory Council (IRSAC) will hold a public meeting on Wednesday, November 16, 2011.

DATES: November 16, 2011.

FOR FURTHER INFORMATION, CONTACT: Ms. Anna Millikan, Program Analyst, National Public Liaison, CL: NPL, 7559, 1111 Constitution Avenue NW., Washington, DC 20224. *Telephone:* (202) 622–6433 (not a toll-free number). *Email address: *public_liaison@irs.gov.*

SUPPLEMENTARY INFORMATION: Notice is hereby given pursuant to section 10(a)(2) of the Federal Advisory Committee Act, 5 U.S.C. App. (1988), a public meeting of the IRSAC will be held on Wednesday, November 16, 2011, from 9 a.m. to 1:15 p.m. at the Embassy Suites Hotel, 1250 22nd Street NW., Consulate/Ambassador Room, Washington, DC 20037. Issues to be discussed include, but not limited to: *Remote Work, Commercial Awareness, Schedule UTP, Distance Learning, Empower Exam Managers as an Alternative to SBSE Fast Track Settlement Program, Enhance Worker Classification Compliance with Voluntary Disclosure, Enhance Collection by taking Unsecured Debt into Consideration, Schedule D (Capital Gains and Losses) Instructions and New Reporting Requirements, Repeater Balance Due Taxpayers, Refundable Adoption Credit, Exclusive Authority over Discipline, Coordination of Administrative Responsibility over Discipline, Suggested Adoption of USPAP by OPR in Judging Appraiser Conduct.* Reports from the four IRSAC subgroups, Large Business and International, Small Business/Self-Employed, Wage & Investment, and the Office of Professional Responsibility will also be presented and discussed. Last minute agenda changes may preclude advanced notice. The meeting room accommodates approximately 80 people, IRSAC members and Internal Revenue Service officials inclusive. Due to limited seating, please call Anna Millikan to confirm your attendance. Ms. Millikan can be reached at (202) 622–6433. Attendees are encouraged to arrive at least 30 minutes before the meeting begins. Should you wish the IRSAC to consider a written statement, please write to Internal Revenue Service, Office of National Public Liaison, CL:NPL:7559, 1111 Constitution Avenue NW., Washington, DC 20224, or email *public_liaison@irs.gov.*

Dated: October 26, 2011.

Candice Cromling,

Director, National Public Liaison.

[FR Doc. 2011–29304 Filed 11–8–11; 4:15 pm]

BILLING CODE 4830–01–P

FEDERAL REGISTER

Vol. 76 Thursday,

No. 218 November 10, 2011

Part II

Department of Health and Human Services

Centers for Medicare & Medicaid Services

42 CFR Parts 413 and 414

Medicare Program; End-Stage Renal Disease Prospective Payment System and Quality Incentive Program; Ambulance Fee Schedule; Durable Medical Equipment; and Competitive Acquisition of Certain Durable Medical Equipment, Prosthetics, Orthotics and Supplies; Final Rule

DEPARTMENT OF HEALTH AND HUMAN SERVICES

Centers for Medicare & Medicaid Services

42 CFR Parts 413 and 414

[CMS–1577–F]

RIN 0938–AQ27

Medicare Program; End-Stage Renal Disease Prospective Payment System and Quality Incentive Program; Ambulance Fee Schedule; Durable Medical Equipment; and Competitive Acquisition of Certain Durable Medical Equipment, Prosthetics, Orthotics and Supplies

AGENCY: Centers for Medicare & Medicaid Services (CMS), HHS.

ACTION: Final rule.

SUMMARY: This final rule updates and makes certain revisions to the End-Stage Renal Disease (ESRD) prospective payment system (PPS) for calendar year (CY) 2012. We are also finalizing the interim final rule with comment period published on April 6, 2011, regarding the transition budget-neutrality adjustment under the ESRD PPS,. This final rule also sets forth requirements for the ESRD quality incentive program (QIP) for payment years (PYs) 2013 and 2014. In addition, this final rule revises the ambulance fee schedule regulations to conform to statutory changes. This final rule also revises the definition of durable medical equipment (DME) by adding a 3-year minimum lifetime requirement (MLR) that must be met by an item or device in order to be considered durable for the purpose of classifying the item under the Medicare benefit category for DME. Finally, this final rule implements certain provisions of section 154 of the Medicare Improvements for Patients and Providers Act of 2008 (MIPPA) related to the durable medical equipment, prosthetics, orthotics and supplies (DMEPOS) Competitive Acquisition Program and responds to comments received on an interim final rule published January 16, 2009, that implemented these provisions of MIPPA effective April 18, 2009. (See the Table of Contents for a listing of the specific issues addressed in this final rule.)

DATES: *Effective dates:* These regulations are effective on January 1, 2012. Also, effective January 1, 2012, we are finalizing the interim final rule with comment (''Medicare Programs: Changes to the End-Stage Renal Disease Prospective Payment System Transition Budget-Neutrality Adjustment'') published on April 6, 2011 (76 FR 18930). Additionally, effective January 12, 2012 the interim rule amending 42 CFR Part 414, published on January 16, 2009 (74 FR 2873), is confirmed as final.

FOR FURTHER INFORMATION CONTACT:

Terri Deutsch, (410) 786–4533, for issues related to ESRD.

Roechel Kujawa, (410) 786–9111, for issues related to ambulance services.

Heidi Oumarou, (410) 786–7942, for issues related to the ESRD market basket.

Shannon Kerr, (410) 786–3039, for issues related to the quality incentive program.

Sandhya Gilkerson, (410) 786–4085, for issues related to DME MLR.

Hafsa Bora, (410) 786–7899 or Iffat Fatima, (410) 786–6709, for DMEPOS Competitive Acquisition Program issues related to comments received on an interim final rule that implemented provisions of MIPPA effective April 18, 2009.

SUPPLEMENTARY INFORMATION:

Addenda Are Only Available Through the Internet on the CMS Web Site

In the past, a majority of the Addenda referred to throughout the preamble of our proposed and final rules were available in the **Federal Register**. However, the Addenda of the annual proposed and final rules will no longer be available in the **Federal Register**. Instead, these Addenda to the annual proposed and final rules will be available only through the Internet on the CMS Web site. The Addenda to the End-Stage Renal Disease (ESRD) Prospective Payment System (PPS) rules are available at: *http://www.cms.gov/ESRDPayment/PAY/list.asp*. Readers who experience any problems accessing any of the Addenda to the proposed and final rules that are posted on the CMS Web site identified above should contact Lisa Hubbard at (410) 786–4533.

Table of Contents

To assist readers in referencing sections contained in this preamble, we are providing a Table of Contents. Some of the issues discussed in this preamble affect the payment policies, but do not require changes to the regulations in the Code of Federal Regulations (CFR).

I. Calendar Year (CY) 2012 End-Stage Renal Disease (ESRD) Prospective Payment System (PPS)
A. Background on the End-Stage Renal Disease Prospective Payment System
B. Summary of the Proposed Provisions and Responses to Comments on the CY 2012 ESRD PPS
1. Updates to the Composite Rate and ESRD PPS Base Rate
a. Composite Rate
b. ESRD PPS Base Rate
2. ESRD Bundled Market Basket
a. Overview and Background
b. Final Market Basket Update Increase Factor and Labor-Related Share for ESRD Facilities for CY 2012
c. Productivity Adjustment
d. Calculation of the ESRDB Market Basket Update, Adjusted for Multifactor Productivity for CY 2012
3. Transition Budget-Neutrality Adjustment for CY 2011
4. Transition Budget-Neutrality Adjustment for CY 2012
5. Low-Volume Facility Provisions
6. Update to the Drug Add-On to the Composite Rate Portion of the ESRD Blended Payment Rate
a. Estimating Growth in Expenditures for Drugs and Biologicals in CY 2012
b. Estimating per Patient Growth
c. Applying the Growth Update to the Drug Add-On Adjustment
d. Update to the Drug Add-On Adjustment for CY 2012
7. Updates to the Wage Index Values and Wage Index Floor for the Composite Rate Portion of the Blended Payment and the ESRD PPS Payment
a. Reduction to the ESRD Wage Index Floor
b. Policies for Areas with no Hospital Data
c. Wage Index Budget-Neutrality Adjustment
d. ESRD PPS Wage Index Tables
8. Drugs
a. Vancomycin
b. Drug Overfill
9. Revisions to Patient-Level Adjustment for Body Surface Area (BSA)
10. Revisions to the Outlier Policy
a. Revisions Related to Outlier ESRD Drugs and Biologicals
b. Exclusion of Automated Multi-Channel Chemistry (AMCC) Laboratory Tests From the Outlier Calculation
c. Impact of Final Changes to the Outlier Policy
D. Technical Corrections
1. Training Add-On
2. ESRD-Related Laboratory Test
E. Clarifications to the CY 2011 ESRD PPS
1. ICD–9–CM Diagnosis Codes
2. Emergency Services to ESRD Beneficiaries
F. Miscellaneous Comments
II. End-Stage Renal Disease Quality Incentive Program for Payment Years (PYs) 2013 and 2014
A. Background for the End-Stage Renal Disease Quality Incentive Program for PY 2013 and PY 2014
B. Summary of the Proposed Provisions and Responses to Comments on the End-Stage Renal Disease (ESRD) Quality Incentive Program (QIP) for PY 2013 and PY 2014
1. PY 2013 ESRD QIP Requirements
a. Performance Measures for the PY 2013 ESRD QIP
b. Performance Period and Case Minimum for the PY 2013 ESRD QIP
c. Performance Standards for the PY 2013 ESRD QIP
d. Methodology for Calculating the Total Performance Score and Payment Reduction for the PY 2013 ESRD QIP

2. PY 2014 ESRD QIP
a. Performance Measures for the PY 2014 ESRD QIP
i. Anemia Management Measure
ii. Dialysis Adequacy Measure
iii. Vascular Access Type (VAT) Measure
iv. Vascular Access Infections Measure
v. Standardized Hospitalization Ratio (SHR)-Admissions Measure
vi. Minimum Case Number for Clinical Measures and Other Considerations
vii. National Healthcare Safety Network (NHSN) Dialysis Event Reporting Measure
viii. Patient Experience of Care Survey Usage Measure
ix. Mineral Metabolism Reporting Measure
3. Performance Period for the PY 2014 ESRD QIP
4. Performance Standards and the Methodology for Calculating the Total Performance Score for the PY 2014 ESRD QIP
i. Performance Standards for the PY 2014 ESRD QIP
ii. Setting Performance Benchmarks and Thresholds
iii. Scoring Provider and Facility Performance on Clinical Measures Based on Achievement
iv. Scoring Provider/Facility Performance on Clinical Measures Based on Improvement
v. Calculating the VAT Measure Score
vi. Calculating the NHSN Dialysis Event Reporting Measure, Patient Experience Survey Usage Reporting Measure and Mineral Metabolism Reporting Measure Scores
vii. Weighting of the PY 2014 ESRD QIP Measures and Calculation of the PY 2014 ESRD QIP
viii. Examples for 2014 ESRD QIP Performance Scoring Model
6. Payment Reductions for the PY 2014 ESRD QIP
7. Public Reporting Requirements
8. Future QIP Measures
9. Process of Updating Measures
III. Ambulance Fee Schedule
A. Summary of Proposed Provisions
1. Section 106 of the Medicare and Medicaid Extenders Act of 2010 (MMEA)
a. Amendment to Section 1834(l)(13) of the Act
b. Amendment to Section 146(b)(1) of MIPPA
c. Amendment to Section 1834(l)(12) of the Act
2. Technical Correction
B. Response to Comments
IV. Durable Medical Equipment and Supplies
A. Background for Durable Medical Equipment (DME) and Supplies
B. Current Issues
C. Overview of the Provisions of the Proposed Durable Medical Equipment (DME) Regulation
D. Summary of the Proposed Provisions and Responses to Comments on the Definition of Durable Medical Equipment (DME) and the 3-Year Minimum Lifetime Requirement (MLR)
1. Application of the 3-Year MLR to Items Currently Covered as DME and to Supplies and Accessories of Covered DME
2. Application of the 3-Year MLR to Multi-Component Devices
V. Interim Final Rule Regarding the Competitive Acquisition Program for Certain Durable Medical Equipment, Prosthetics, Orthotics and Supplies (DMEPOS)
A. Background
1. Legislative and Regulatory History of the DMEPOS Competitive Bidding Program
2. The MIPPA and the Medicare DMEPOS Competitive Bidding Program
B. Overview of the Interim Final Rule
C. Summary of the Interim Final Rule Provisions and Response to Comments on Changes to the Competitive Acquisition of Certain Durable Medical Equipment, Prosthetics, Orthotics and Supplies (DMEPOS) by Certain Provisions of the Medicare Improvements for Patients and Providers Act of 2008 (MIPPA)
1. General Changes to the DMEPOS Competitive Bidding Program
a. Temporary Delay of the Medicare DMEPOS Competitive Bidding Program
b. Supplier Feedback on Missing Covered Documents
c. Disclosure of Subcontractors and Their Accreditation Status Under the Competitive Bidding Program
d. Exemption From Competitive Bidding for Certain DMEPOS
e. Exclusion of Group 3 Complex Rehabilitative Power Wheelchairs
2. Round 1 Changes to the Competitive Bidding Program
a. Rebidding of the ''Same Areas'' as the Previous Round 1, Unless Otherwise Specified
b. Rebidding of the ''Same Items and Services'' as the Previous Round 1, Unless Otherwise Specified
D. Other Public Comments Received on the January 16, 2009 Interim Final Rule
VI. Collection of Information Requirements
VII. Economic Analyses
VIII. Regulatory Flexibility Act Analysis
IX. Unfunded Mandates Reform Act Analysis
X. Federalism Analysis
XI. Files Available to the Public via the Internet
Regulations Text

Acronyms

Because of the many terms to which we refer by acronym in this final rule, we are listing the acronyms used and their corresponding meanings in alphabetical order below:

AMCC Automated Multi-Channel Chemistry
ASP Average Sales Price
AV Arteriovenous
BLS Bureau of Labor Statistics
BMI Body Mass Index
BSA Body Surface Area
CY Calendar Year
CBSA Core-Based Statistical Area
CDC Centers for Disease Control and Prevention
CLABSI Central Line Access Bloodstream Infections
CFR Code of Federal Regulations
CIP Core Indicators Project
CMS Centers for Medicare & Medicaid Services
CPM Clinical Performance Measure
CPT Current Procedural Terminology
CROWNWeb Consolidated Renal Operations in a Web-Enabled Network
DFC Dialysis Facility Compare
DFR Dialysis Facility Report
DME Durable Medical Equipment
ESA Erythropoiesis stimulating agent
ESRD End-Stage Renal Disease
ESRDB End-Stage Renal Disease Bundled
FDA Food and Drug Administration
FI/MAC Fiscal Intermediary/Medicare Administrative Contractor
FY Fiscal Year
GDP Gross Domestic Product
HAI Healthcare-associated Infections
HCPCS Healthcare Common Procedure Coding System
HD Hemodialysis
HHD Home Hemodialysis
ICD–9–CM International Classification of Diseases, 9th Edition, Clinical Modifications
ICH CAHPS In-Center Hemodialysis Consumer Assessment of Healthcare Advisors
IGI IHS Global Insight
IPPS Inpatient Prospective Payment System
KDIGO Kidney Disease: Improving Global Outcomes
KDOQI Kidney Disease Outcome Quality Initiative
Kt/V A measure of dialysis adequacy where K is dialyzer clearance, t is dialysis time, and V is total body water volume
LDO Large Dialysis Organization
MAP Medicare Allowable Payment
MCP Monthly Capitation Payment
MIPPA Medicare Improvements for Patients and Providers Act of 2008 (Pub. L. 110–275)
MMA Medicare Prescription Drug, Improvement and Modernization Act of 2003
MMEA Medicare and Medicaid Extenders Act of 2010 Public Law 111–309
MFP Multifactor Productivity
NHSN National Healthcare Safety Network
NQF National Quality Forum
PD Peritoneal Dialysis
PFS Physician Fee Schedule
PPS Prospective Payment System
PSR Performance Score Report
PY Payment Year
QIP Quality Incentive Program
REMIS Renal Management Information System
RFA Regulatory Flexibility Act
RUL Reasonable Useful Lifetime
SBA Small Business Administration
SIMS Standard Information Management System
SHR Standardized Hospitalization Ratio
SSA Social Security Administration
The Act Social Security Act
The Affordable Care Act The Patient Protections and Affordable Care Act
URR Urea reduction ratio
VBP Value Based Purchasing

I. Calendar Year (CY) 2012 End-Stage Renal Disease (ESRD) Prospective Payment System (PPS)

A. Background on the End-Stage Renal Disease Prospective Payment System

On August 12, 2010, we published in the **Federal Register**, a final rule (75 FR 49030 through 49214), entitled, ''End-Stage Renal Disease Prospective Payment System'', hereinafter referred to as the CY 2011 ESRD PPS final rule. In the CY 2011 ESRD PPS final rule, we implemented a case-mix adjusted bundled PPS for Medicare outpatient ESRD dialysis patients beginning January 1, 2011, in accordance with section 1881(b)(14) of the Social Security Act (the Act), as added by section 153(b) of the Medicare Improvements for Patients and Providers Act of 2008 (MIPPA). The ESRD PPS replaced the basic case-mix adjusted composite payment system and the methodologies for the reimbursement of separately billable outpatient ESRD services.

Also, section 1881(b)(14)(F) of the Act, as added by section 153(b) of MIPPA and amended by section 3401(h) of Public Law 111–148, the Affordable Care Act, established that beginning CY 2012, and each subsequent year, the Secretary shall reduce the market basket increase factor by a productivity adjustment described in section 1886(b)(3)(B)(xi)(II) of the Act.

In the CY 2011 ESRD PPS final rule (75 FR 49030), the Centers for Medicare & Medicaid Services (CMS) finalized the following:

- A base rate of $229.63 per treatment for renal dialysis services (but postponed payment for oral-only renal dialysis drugs under the ESRD PPS until January 1, 2014) that applies to both adult and pediatric dialysis patients prior to the application of any case-mix adjustments. This amount included the 2 percent reduction for budget neutrality required by MIPPA, a one percent reduction for estimated outlier payments, and a reduction to account for estimated payments for case-mix and the low-volume payment adjustments.
- A 4-year transition period (for those ESRD facilities that elected to receive blended payments during the transition) during which ESRD facilities receive a blend of payments under the prior basic case-mix adjusted composite payment system and the new ESRD PPS. Although the statute uses the term ''phase-in'', we use the term ''transition'' to be consistent with other Medicare payment systems.
- A −3.1 percent transition budget-neutrality adjustment to ensure that overall spending under the ESRD PPS did not increase as a result of the provision that permits ESRD facilities to be excluded from the 4-year transition.
- Payment adjustments for dialysis treatments furnished to adults for patient age, body surface area (BSA), low body mass index (BMI), onset of dialysis, and six specified co-morbidities.
- A home or self-care dialysis training payment adjustment of $33.44 per treatment paid in addition to the case-mix adjusted per treatment amount, which is wage adjusted and applies to claims for patients trained by ESRD facilities certified to provide home dialysis training.
- Payment adjustments for dialysis treatments furnished to pediatric patients for patient age and dialysis modality.
- A low-volume payment adjustment for adult patients of 18.9 percent that applies to the otherwise applicable case-mix adjusted payment rate for facilities that qualify as low-volume ESRD facilities.
- An outlier payment policy that provides an additional payment to ESRD facilities treating high cost, resource-intensive patients.
- The wage index adjustment that is applied when calculating the ESRD PPS payment rates in order to account for geographic differences in area wage levels.
- An ESRD bundled (ESRDB) market basket index used to project prices in the costs of goods and services used to furnish outpatient maintenance dialysis.

In addition, on April 6, 2011, we published an interim final rule with comment period in the **Federal Register** (76 FR 18930), entitled ''Changes in the End-Stage Renal Disease Prospective Payment System Transition Budget-Neutrality Adjustment'', which revised the ESRD transition budget-neutrality adjustment for CY 2011. In the interim final rule, we revised the 3.1 percent transition budget-neutrality adjustment reduction to a zero percent transition budget-neutrality adjustment for renal dialysis services furnished on April 1, 2011 through December 31, 2011.

B. Summary of the Proposed Provisions and Responses to Comments on the CY 2012 ESRD PPS

The proposed rule entitled, ''Medicare Program; Changes to the End-Stage Renal Disease Prospective Payment System for CY 2012, End-Stage Renal Disease Quality Incentive Program for PY 2013 and PY 2014; Ambulance Fee Schedule; and Durable Medical Equipment'' (76 FR 40498) (the ''proposed rule'') appeared in the **Federal Register** on July 8, 2011, with a comment period that ended on August 30, 2011 (76 FR 40498). In that proposed rule, for the ESRD PPS, we proposed to (1) make a number of routine updates for CY 2012, (2) implement the second year of the transition, (3) make several policy changes and clarifications, and (4) technical changes with regard to the CY 2011 ESRD PPS final rule. We received approximately 40 public comments on the ESRD PPS proposals, including comments from dialysis facilities, the national organizations representing dialysis facilities, nephrologists, patients, pharmaceutical manufacturers, hospitals and their representatives, and MedPAC. In this final rule, we provide a summary of each proposed provision, a summary of the public comments received, our responses to them, and what we are finalizing for the CY 2012 ESRD PPS in this final rule.

1. Updates to the Composite Rate and ESRD PPS Base Rate

a. Composite Rate

Section 1881(b)(14)(E)(i) of the Act requires a 4-year transition under the ESRD PPS. For CY 2012, under 42 CFR 413.239(a)(2), ESRD facilities that receive payment through the transition receive a blended rate equal to the sum of 50 percent of the ESRD PPS amount and 50 percent of the basic case-mix adjusted composite payment amount. Accordingly, we continue to update the composite rate portion of the blended payment during the 4-year transition (that is, CYs 2011 through 2013). For a historical perspective of the basic case-mix adjusted composite payment system for ESRD facilities, including the CY 2011 update to the composite rate portion of the blended rate, please see the CY 2011 Physician Fee Schedule (PFS) proposed rule, (75 FR 40164) and the CY 2011 PFS final rule (75 FR 49031 through 49033). In addition, we discuss the CY 2012 drug add-on and the updated wage index values for the composite rate portion of the blended payment in sections I.C.6 and I.C.7, respectively, of this final rule.

Under section 1881(b)(14)(F)(ii) of the Act, for years during which the transition applies, the composite rate portion of the blend shall be annually increased by the ESRDB market basket, which for CY 2012 and each subsequent year, shall be reduced by the productivity adjustment described in section 1886(b)(3)(B)(xi)(II) of the Act. In section I.B.2.b of this final rule, we are finalizing the CY 2012 ESRDB market basket update of 3.0 percent, based on the third quarter 2011 IGI forecast of the ESRDB market basket. In

section I.B.2.c of this final rule, we are finalizing the CY 2012 MFP adjustment of 0.9 percent based on the third quarter 2011 IGI forecast of the MFP.

We proposed to add the CY 2011 Part D per treatment amount (that is, $0.49) to the CY 2011 composite rate in order to update the Part D amount for CY 2012 using the ESRDB market basket minus the productivity adjustment (76 FR 40502). We believed this approach is preferable to applying a growth factor to the $0.49 that is based on the rates for overall prescription drug prices that were used in the National Health Expenditure Projections, as we did for the establishment of the CY 2011 ESRD PPS base rate, because it is consistent with the update applied to the ESRD PPS base rate, which includes a per treatment amount for former part D drugs (that is, $0.49). We sought comment on our proposal to add the CY 2011 part D payment amount (that is, $0.49) to the composite rate portion of the blended payment and update it using the ESRDB market basket minus productivity adjustment. The basis for the first part of the transition budget-neutrality adjustment (that is, the calculation of the $0.49 part D amount) was set forth in the CY 2011 ESRD PPS final rule at 75 FR 49082. The comments and our responses are set forth below.

Comment: Several commenters expressed concerns about the proposed methodology to add the former Part D oral drug amount ($0.49) to the composite rate and then apply the market basket reduced by the productivity adjustment. Some commenters believe that updating the payment for oral equivalents of injectable drugs by the ESRD market basket minus productivity could set a precedent that might affect access to care for preferred agents when oral drugs are included in the bundle in 2014. One commenter stated that it is inappropriate to apply the productivity adjustment to full transition blended payment. Instead, they believe the blended payment amount, for CY 2012, should be split with 50 percent of it paid at the PPI-inflated market basket rates and 50 percent of it adjusted using the update factors because the transition blended payment rate is based on 50 percent of the PPS payment rate and 50 percent on the old composite rate plus drug add-on rate. One commenter acknowledged that by using the split methodology, ESRD PPS would be updated differently than other payment systems, but the commenter believed that this distinction was appropriate because of the unique nature of the program and because drugs represent such a large portion of the overall costs incurred by dialysis facilities.

Response: Beginning in 2012, section 1881(b)(14)(F) of the Act, requires us to annually update the ESRD PPS payment amounts and the composite rate portion of the blended transition payment by an ESRD market basket increase that is reduced by the productivity adjustment described in section 1886(b)(3)(B)xi)(II) of the Act. Given that the same update is used for both ESRD PPS and transition blended payments, and given the ESRD PPS base rate includes a portion of former Part D drugs, we proposed to add the $0.49 part D drug amount to the composite rate portion of the blended payment because we wanted to update it consistent with how we update the ESRD PPS base rate. Further, because the statute requires an update using the ESRDB market basket less productivity and the ESRDB market basket is comprised of the Producer Price Index (PPI) for prescription drugs as a proxy for measuring price growth in ESRD-related drugs, we believe that our proposal to add the $0.49 to the composite rate and update it using the ESRDB market basket less productivity is appropriate. Therefore, for CY 2012, the composite rate payment, including the $0.49 Part D amount, will be updated by the ESRDB market basket less productivity. With regard to the commenter's concerns that the addition of $0.49 to the composite rate would set a precedent that might affect access to care for preferred agents when oral-only drugs are included in the bundle in 2014, we note that we did not propose any payment policies for the oral-only drugs in the proposed rule. We will address in future rulemaking oral-only drugs and the bundled amount established in CY 2011, and there will be an opportunity for public comment on any future proposals we may make.

Consequently, for CY 2012, the composite rate portion of the ESRD PPS blended payment is $141.94. The $141.94 reflects the addition of the CY 2011 part D per treatment amount ($0.49) to the CY 2011 composite rate of $138.53, and application of the ESRDB market basket minus productivity adjustment ($138.53 + 0.49 = $139.02; $139.02 × 1.021 = $141.94).

b. ESRD PPS Base Rate

We described the development of the ESRD PPS per-treatment base rate in the CY 2011 ESRD PPS final rule (75 FR 49071) and established Medicare regulations at 42 CFR 413.220 and 413.230. The CY 2011 ESRD PPS final rule also provides a detailed discussion of the methodology used to calculate the ESRD PPS base rate and the computation of factors used to adjust the ESRD PPS base rate for projected outlier payments and budget-neutrality in accordance with sections 1881(b)(14)(D)(ii) and 1881(b)(14)(A)(ii) of the Act, respectively (75 FR 49071 through 49082). Specifically, the ESRD PPS base rate was developed from CY 2007 claims (that is, the lowest per patient utilization year), updated to CY 2011, and represented the average per treatment Medicare allowable payment (MAP) for composite rate and separately billable services. In addition, in accordance with § 413.230, the ESRD PPS base rate is adjusted for the patient-specific case-mix adjustments, applicable facility adjustments, geographic differences in area wage levels using an area wage index, as well as any outlier payment or training add-on adjustments. For CY 2011, the ESRD PPS base rate was $229.63 (75 FR 49082).

As required by section 1881(b)(14)(F) of the Act, in this final rule, for CY 2012, we applied the 2.1 percent increase (ESRDB market basket update less productivity) to the CY 2011 ESRD PPS base rate of $229.63, which results in an ESRD PPS base rate for CY 2012 of $234.45 (229.63 × 1.021 = 234.45). The ESRD PPS base rate applies to the ESRD PPS portion of the blended payments under the transition and to the ESRD PPS payments. In addition, as discussed in section I.C.7.c of the proposed rule (76 FR 40509), we proposed to apply the wage index budget-neutrality adjustment factor to the ESRD PPS base rate in CY 2012.

We did not receive any comments on this proposal. Therefore, we are finalizing the policy to apply the wage index budget-neutrality adjustment to the ESRD PPS base rate. For CY 2012, we apply the wage index budget-neutrality adjustment factor of 1.001520 to the updated base rate (that is, $234.45), yielding an ESRD PPS wage-index budget-neutrality adjusted base rate for CY 2012 of $234.81 ($234.45 × 1.001520 = 234.81).

2. ESRD Bundled Market Basket

a. Overview and Background

In accordance with section 1881(b)(14)(F)(i) of the Act, as added by section 153(b) of MIPPA and amended by section 3401(h) of the Affordable Care Act, beginning in 2012, the ESRD bundled payment amounts are required to be annually increased by an ESRD market basket increase factor that is reduced by the productivity adjustment described in section 1886(b)(3)(B)(xi)(II) of the Act. The statute further provides that the market basket increase factor

should reflect the changes over time in the prices of an appropriate mix of goods and services used to furnish renal dialysis services. Under section 1881(b)(14)(F)(ii) of the Act, as added by section 153(b) of MIPPA and amended by section 3401(h) of the Affordable Care Act, the ESRD bundled (ESRDB) rate market basket increase factor will also be used to update the composite rate portion of ESRD payments during the ESRD PPS transition period from 2011 through 2013; though beginning in 2012, such market basket increase factor will be reduced by the productivity adjustment. As a result of amendments by section 3401(h) of the Affordable Care Act, a full market basket was applied to the composite rate portion of the blended payment in CY 2011 during the first year of the transition.

b. Final Market Basket Update Increase Factor and Labor-Related Share for ESRD facilities for CY 2012

As required under section 1881(b)(14)(F) of the Act, CMS developed an all-inclusive ESRDB input price index (75 FR 49151 through 49162). Although ''market basket'' technically describes the mix of goods and services used to produce ESRD care, this term is also commonly used to denote the input price index (that is, cost categories, their respective weights, and price proxies combined) derived from that market basket. Accordingly, the term ''ESRDB market basket'', as used in this document, refers to the ESRDB input price index.

We proposed to use the same methodology described in the CY 2011 ESRD PPS final rule (75 FR 49151 through 49162) to compute the CY 2012 ESRDB market basket increase factor and labor-related share based on the best available data (76 FR 40503). Consistent with historical practice, we estimate the ESRDB market basket update based on IHS Global Insight (IGI), Inc.'s forecast using the most recently available data. IGI is a nationally recognized economic and financial forecasting firm that contracts with CMS to forecast the components of the market baskets.

Using this method and the IGI forecast for the first quarter of 2011 of the CY 2008-based ESRDB market basket (with historical data through the fourth quarter of 2010), and consistent with our historical practice of estimating market basket increases based on the best available data, the proposed CY 2012 ESRDB market basket increase factor was 3.0 percent. We also proposed that if more recent data became subsequently available (for example, a more recent estimate of the market basket), we would use that data, if appropriate, to determine the CY 2012 update in the final rule. Therefore, we used the IGI's third quarter 2011 forecast with history through the second quarter of 2011, and as discussed below, the projected market basket update for CY 2012 that we are finalizing is 3.0 percent based on the 2008-based ESRDB market basket.

Additionally, we proposed to continue to use a labor-related share of 41.737 percent for CY 2012 for the ESRD PPS payment (76 FR 40503), which was finalized in the CY 2011 ESRD final rule (75 FR 49161). We also proposed to continue to use a labor-related share of 53.711 percent for the ESRD composite rate portion of the blended payment for all years of the transition (76 FR 40503). This labor-related share was developed from the labor-related components of the 1997 ESRD composite rate market basket that was finalized in the 2005 PFS final rule (70 FR 70168), and is consistent with the mix of labor-related services paid under the composite rate, as well as the method finalized in the CY 2011 ESRD PPS final rule (75 FR 49116).

The comments we received on these proposals and our responses are set forth below.

Comment: Several commenters believe that there should be more transparency in the calculation of the market basket update and are concerned about the lack of data available to validate the calculations.

Response: We agree that the public should be able to replicate the methodology used to construct the ESRDB market basket. We disagree, however, that CMS has not been fully transparent in the calculation of the market basket update. In the CY 2011 ESRD final rule (75 FR 49151 through 49161), we provided the public with the cost shares for the ESRDB market basket and the data sources for the establishment of those cost shares. We also provided a detailed description of the data sources used to develop the ESRDB market basket cost weights and the price proxies used in the ESRDB market basket were listed for each cost category, which are based on data maintained and published by the Bureau of Labor Statistics (BLS). We refer the commenter to the BLS regarding any specific information on the detailed price proxies. In addition, to assist the commenter and other interested stakeholders in locating these price proxies on the BLS Web site, we have provided the individual BLS series codes for the indexes in the price proxy discussion of the final rule and the directions for obtaining the data through the BLS Web site. These two pieces of information, the cost weights and the price proxies, allow the public to replicate the historical time series of the ESRDB market basket.

The forecasts of the individual price proxies used in a market basket are developed independently by IGI, a nationally recognized economic and financial forecasting firm. We purchase IGI's detailed price proxy projections for use in the Medicare market baskets. As a matter of practice, we publish all of the underlying detail for each price proxy for the historical period. However, because the projections of each individual price proxy are proprietary, we aggregate those projections into higher level categories and then publish the results with a one-quarter lag on the CMS Web site. This is consistent with the level of data provided for other PPS payment system market baskets. The ESRDB market basket data, including the detail as described above, is published on the CMS Web site at the following link: (*https://www.cms.gov/MedicareProgramRatesStats/04_MarketBasketData.asp#TopOfPage*).

After considering the public comments received and for the reasons we previously articulated, we are finalizing our proposals to continue to use the ESRDB market basket forecasts for the ESRD PPS and transition payment updates. Therefore, we are finalizing the ESRDB market basket update of 3.0 percent, based on the IGI third quarter forecast of the ESRDB market basket. We did not receive any public comments regarding our proposal to continue to use the labor-related shares for the ESRD PPS portion and composite portion of the blended payment during the transition period. Therefore, we are also finalizing the proposal to continue to use the labor-related share of 41.737 percent for the CY 2012 ESRD PPS payment and the labor-related share of 53.711 percent for the CY 2012 ESRD composite rate portion of the blended payment, for those facilities that elected to transition to the bundled ESRD PPS.

c. Productivity Adjustment

The ESRDB market basket must be annually adjusted by changes in economy-wide productivity. Specifically, under section 1881(b)(14)(F) of the Act, as amended by section 3401(h) of the Affordable Care Act, for CY 2012 and each subsequent year, the ESRD market basket percentage increase factor shall be reduced by the productivity adjustment described in section 1886(b)(3)(B)(xi)(II) of the Act. The statute defines the productivity

adjustment to be equal to the 10-year moving average of changes in annual economy-wide private nonfarm business multifactor productivity (MFP) (as projected by the Secretary for the 10-year period ending with the applicable fiscal year, year, cost reporting period, or other annual period) (the ''MFP adjustment''). The BLS is the agency that publishes the official measure of private nonfarm business MFP. Please see *http://www.bls.gov/mfp* to obtain the BLS historical published MFP data.

CMS notes that the proposed and final methodology for calculating and applying the MFP adjustment to the ESRD payment update is similar to the methodology used in other payment systems, as required by section 3401 of the Affordable Care Act.

The projection of MFP is currently produced by IGI, an economic forecasting firm. In order to generate a forecast of MFP, IGI replicated the MFP measure calculated by the BLS using a series of proxy variables derived from IGI's U.S. macroeconomic models. These models take into account a very broad range of factors that influence the total U.S. economy. IGI forecasts the underlying proxy components such as gross domestic product (GDP), capital, and labor inputs required to estimate MFP and then combines those projections according to the BLS methodology. In Table 1 below, we identify each of the major MFP component series employed by the BLS to measure MFP. We also provide the corresponding concepts forecasted by IGI and determined to be the best available proxies for the BLS series.

TABLE 1—MULTIFACTOR PRODUCTIVITY COMPONENT SERIES EMPLOYED BY THE BUREAU OF LABOR STATISTICS AND IHS GLOBAL INSIGHT

BLS series	IGI series
Real value-added output, constant 2005 dollars	Non-housing non-government non-farm real GDP, Billions of chained 2005 dollars – annual rate
Private non-farm business sector labor input; 2005=100.00	Hours of all persons in private nonfarm establishments, 2005=100.00, adjusted for labor composition effects
Aggregate capital inputs; 2005=100.00	Real effective capital stock used for full employment GDP, Billions of chained 2005 dollars

IGI found that the historical growth rates of the BLS components used to calculate MFP and the IGI components identified are consistent across all series and therefore suitable proxies for calculating MFP. We have included below a more detailed description of the methodology used by IGI to construct a forecast of MFP, which is aligned closely with the methodology employed by the BLS. For more information regarding the BLS method for estimating productivity, please see the following link: *http://www.bls.gov/mfp/mprtech.pdf*.

At the time of the development of this CY 2012 final rule, the BLS published a historical time series of private nonfarm business MFP for 1987 through 2010, with 2010 being a preliminary value. Using this historical MFP series and the IGI forecasted series, IGI has developed a forecast of MFP for 2011 through 2021, as described below. We note that the historical MFP series and the IGI forcasted series are updates from those used at the time of the proposed rule (1987 through 2009, and 2010 through 2021, respectively).

To create a forecast of BLS' MFP index, the forecasted annual growth rates of the ''non-housing, nongovernment, non-farm, real GDP,'' ''hours of all persons in private nonfarm establishments adjusted for labor composition,'' and ''real effective capital stock'' series (ranging from 2011 to 2021) are used to ''grow'' the levels of the ''real value-added output,'' ''private non-farm business sector labor input,'' and ''aggregate capital input'' series published by the BLS. Projections of the ''hours of all persons'' measure are calculated using the difference between the projected growth rates of real output per hour and real GDP. This difference is then adjusted to account for changes in labor composition in the forecast interval.

Using these three key concepts, MFP is derived by subtracting the contribution of labor and capital inputs from output growth. However, in order to estimate MFP, we need to understand the relative contributions of labor and capital to total output growth. Therefore, two additional measures are needed to operationalize the estimation of the IGI MFP projection: Labor compensation and capital income. The sum of labor compensation and capital income represents total income. The BLS calculates labor compensation and capital income (in current dollar terms) to derive the nominal values of labor and capital inputs. IGI uses the ''nongovernment total compensation'' and ''flow of capital services from the total private non-residential capital stock'' series as proxies for the BLS' income measures. These two proxy measures for income are divided by total income to obtain the shares of labor compensation and capital income to total income. In order to estimate labor's contribution and capital's contribution to the growth in total output, the growth rates of the proxy variables for labor and capital inputs are multiplied by their respective shares of total income. These contributions of labor and capital to output growth is subtracted from total output growth to calculate the ''change in the growth rates of multifactor productivity:''

MFP = Total output growth − ((labor input growth * labor compensation share) + (capital input growth * capital income share))

The change in the growth rates (also referred to as the compound growth rates) of the IGI MFP are multiplied by 100 in order to calculate the percent change in growth rates (the percent change in growth rates are published by

the BLS for its historical MFP measure). Finally, the growth rates of the IGI MFP are converted to index levels based to 2005 to be consistent with the BLS' methodology. For benchmarking purposes, the historical growth rates of IGI's proxy variables were used to estimate a historical measure of MFP, which was compared to the historical MFP estimate published by the BLS. The comparison revealed that the growth rates of the components were consistent across all series, and therefore validated the use of the proxy variables in generating the IGI MFP projections. The resulting MFP index was then interpolated to a quarterly frequency using the Bassie method for temporal disaggregation. The Bassie technique utilizes an indicator (pattern) series for its calculations. IGI uses the index of output per hour (published by the BLS) as an indicator when interpolating the MFP index.

The comments we received on this proposal and our response are set forth below.

Comment: One commenter stated that the factors used in the productivity adjustor, which are mostly derived from capital and labor related economic measures, are not appropriate for use to modify the market basket costs of drugs, which are consumable items. One commenter further believes that ESRD PPS should be treated differently than other PPS payment systems because drugs represent such a large portion of the overall costs incurred by dialysis services. One pharmaceutical company expressed concern about the proposal to apply the productivity adjustment to the Part D oral drug portion of the blended payment.

Response: In accordance with section 1881(b)(14)(F)(i) of the Act, beginning in 2012, all renal dialysis services included in the ESRD bundle are required to be annually increased by an ESRD market basket increase factor that is reduced by the productivity adjustment described in section 1886(b)(3)(B)(xi)(II) of the Act. Therefore, CMS is statutorily required to update ESRD PPS payments by a market basket update less productivity. We also note that CMS is statutorily required to update the ESRD composite rate portion of the blended payment by the ESRDB market basket less productivity. During the transition, any items or services included in the bundle have been factored into the cost shares for the ESRDB market basket; as such, the costs associated with oral drugs that were formerly paid under Part D are included in the ESRDB market basket cost share weight for drugs. As finalized in the CY 2011 ESRD final rule (75 FR 49156), the market basket drug cost share weight accounts for all drugs included in the ESRD bundled payment, including ESRD-related oral drugs with injectable equivalents that were formerly covered under Medicare Part D as well as the costs associated with any other drugs as reported on the ESRD Medicare Cost Report. In 2014, any changes to the bundle will be factored into a revised ESRDB market basket and be subject to notice and comment rulemaking. Therefore, although drugs account for a larger proportion of expenses in the ESRDB market basket than in some other provider-type PPS market baskets, we will continue to update the ESRD payments as statutorily mandated by the Congress. As such, for CY 2012, the ESRD PPS payment rate and the composite portion of the blended payment will be increased by the estimated market basket update less productivity, 2.1 percent (3.0 percent ESRDB market basket less 0.9 percentage point MFP adjustment), which is described in more detail below.

After careful consideration of the public comments and to satisfy the statutory requirement for ESRD payment updates mentioned above, we are finalizing our proposed method for calculating and applying the MFP adjustment to the ESRDB market basket.

d. Calculation of the ESRDB Market Basket Update, Adjusted for Multifactor Productivity for CY 2012

Under section 1881(b)(14)(F)(i) of the Act, beginning in 2012, ESRD PPS payment amounts and the composite rate portion of the transition blended payment amounts shall be annually increased by an ESRD market basket percentage increase factor reduced by a productivity adjustment.

We proposed to estimate the ESRDB market basket percentage for CY 2012 based on the CY 2008-based ESRDB market basket (76 FR 40504). In order to calculate the MFP-adjusted update for the ESRDB market basket during the transition period, we proposed that the MFP percentage adjustment be subtracted from the CY 2012 market basket update calculated using the CY 2008-based ESRDB market basket (75 FR 40504). We proposed that the end of the 10-year moving average of changes in the MFP should coincide with the end of the appropriate CY update period. Since the market basket update is reduced by the MFP adjustment to determine the annual update for the ESRD PPS and the ESRD composite rate portions of the blended payment during the transition, we believe it is appropriate for the numbers associated with both components of the calculation (the market basket and the productivity adjustment) to coincide so that changes in market conditions are aligned. Therefore, for the CY 2012 update, we proposed that the MFP adjustment be calculated as the 10-year moving average of changes in MFP for the period ending December 31, 2012. We proposed to round the final annual adjustment to the one-tenth of one percentage point level up or down as applicable according to conventional rounding rules (that is, if the number we are rounding is followed by 5, 6, 7, 8, or 9, we will round the number up; if the number we are rounding is followed by 1, 2, 3, or 4, we will round the number down).

Thus, in accordance with section 1881(b)(14)(F)(i) of the Act, the proposed market basket increase factor for CY 2012 for the ESRDB market basket was based on the 1st quarter 2011 forecast of the CY 2008-based ESRDB market basket update, which was estimated to be 3.0 percent. This market basket percentage was then reduced by the MFP adjustment (the 10-year moving average of MFP for the period ending CY 2012) of 1.2 percent, which is calculated as described above and based on IGI's 1st quarter 2011 forecast. The resulting proposed MFP-adjusted ESRDB market basket update for CY 2012 was equal to 1.8 percent, or 3.0 percent less 1.2 percent. We proposed that if more recent data were subsequently available (for example, a more recent estimate of the market basket and MFP adjustment), we would use such data, if appropriate, to determine the CY 2012 market basket update and MFP adjustment in the CY 2012 ESRD PPS final rule. Consistent with historical practice and our proposal, we update the market basket increase factor estimate and the MFP adjustment in this final rule to reflect the most recent available data (75 FR 40505).

We received no public comments related to the proposed MFP-adjusted ESRDB market basket update for CY 2012. Therefore, we are finalizing our proposal to base the CY 2012 market basket update, which is used to determine the applicable percentage increase for the ESRD PPS and transition payments, on the most recent data available, which is the third quarter 2011 forecast of the CY 2008-based ESRDB market basket (estimated to be 3.0 percent). The MFP adjustment (the 10-year moving average of MFP for the period ending CY 2012) we are finalizing is 0.9 percent, which was calculated as described above and based on IGI's third quarter 2011 forecast.

Therefore, the final MFP-adjusted ESRDB market basket update for CY 2012 is 2.1 percent (3.0 percent ESRDB market basket less 0.9 percentage point MFP adjustment).

3. Transition Budget-Neutrality Adjustment for CY 2011

Section 1881(b)(14)(E)(iii) of the Act requires that an adjustment to payments be made for renal dialysis services provided by ESRD facilities during the transition so that the estimated total payments under the ESRD PPS, including payments under the transition, equal the estimated total amount of payments that would otherwise occur under the ESRD PPS without such a transition. In the CY 2011 ESRD PPS final rule, we explained that because we would not know the actual number of ESRD facilities that would elect to opt out of the transition prior to publishing the final rule, we would simulate payments under the existing basic case-mix adjusted composite payment system and under the ESRD PPS to determine how many ESRD facilities we believed would elect to receive payment under 100 percent ESRD PPS. Based on our simulations using 2007 data, we estimated that 43 percent of ESRD facilities would financially benefit from receiving full payment under the ESRD PPS. We indicated that based on the simulation of estimated payments, a 3.1 percent reduction would be applied to all payments made to ESRD facilities for renal dialysis services furnished on January 1, 2011 through December 31, 2011 (75 FR 49082 through 49083).

On April 6, 2011, we published an interim final rule with comment period in the **Federal Register** (76 FR 18930), entitled ''Changes to the End-Stage Renal Disease Prospective Payment System Transition Budget-Neutrality Adjustment'', which revised the ESRD transition budget-neutrality adjustment finalized for CY 2011. In the interim final rule, we indicated that based upon the election data submitted by ESRD facilities, 87 percent of ESRD facilities elected to opt out of the transition. When we applied the actual number of ESRD facilities electing to receive payment under the ESRD PPS, the transition budget-neutrality adjustment was determined to be zero rather than a 3.1 reduction in payments. We revised the 3.1 percent transition budget-neutrality adjustment reduction to a zero percent transition budget-neutrality adjustment for renal dialysis services furnished on April 1, 2011 through December 31, 2011. We also indicated that we would respond to comments submitted on the interim final rule in the CY 2012 ESRD PPS final rule.

We received four comments during the IFC comment period and three comments in response to the CY 2012 ESRD PPS proposed rule. All comments were in support of the revised CY 2011 transition budget-neutrality adjustment factor. Therefore, we are finalizing the revised CY 2011 transition budget-neutrality adjustment factor of zero for ESRD claims for renal dialysis services furnished on April 1, 2011 through December 31, 2011.

4. Transition Budget-Neutrality Adjustment for CY 2012

Section 1881(b)(14)(E)(i) of the Act requires the Secretary to provide a four-year phase-in of the payments under the ESRD PPS for renal dialysis services furnished on or after January 1, 2011, with payments under the ESRD PPS fully implemented for renal dialysis services furnished on or after January 1, 2014. We use the term ''transition'' rather than ''phase-in'' to be consistent with other Medicare payment systems.

Section 1881(b)(14)(E)(ii) of the Act permitted ESRD facilities to make a one-time election to be excluded from the transition. An ESRD facility that elected to be excluded from the transition would receive payment for renal dialysis services provided on or after January 1, 2011, based on 100 percent of the payment rate under the ESRD PPS rather than a blended payment based in part on the payment rate under the basic case-mix adjusted composite payment system and in part on the payment rate under the ESRD PPS. Section 1881(b)(14)(E)(iii) of the Act also requires that we make an adjustment to payments during the transition so that the estimated total amount of payments under the ESRD PPS, including payments under the transition, equals the estimated total amount of payments that would otherwise occur under the ESRD PPS without such a transition. We refer to this provision as the transition budget-neutrality adjustment.

As described in the CY 2011 ESRD PPS final rule (75 FR 49082), the transition budget-neutrality adjustment is comprised of two parts. For the first part, we created a payment adjustment to the composite rate portion of the blended payment during the transition to account for the per treatment costs of drugs that were paid under Part D. For the second part, we computed a factor that would make the estimated total amount of payments under the ESRD PPS, including payments under the transition, equal to the estimated total amount of payments that would otherwise occur without such a transition. In the proposed rule, we addressed both parts of the transition budget-neutrality adjustment (76 FR 40505 and 40506). The first part of the transition budget-neutrality adjustment was addressed in section I.C.1. of this final rule where we address updates to the composite rate and the ESRD PPS base rate.

For the second part of the transition budget-neutrality factor, we first determined the estimated increase in payments under the transition and then determined an offset factor, based on estimates of which facilities would choose to opt out of the transition (for a detailed description, see the CY 2011 ESRD PPS proposed rule, 74 FR 49946). We estimated the number of facilities that would choose to opt out of the transition by comparing payment under the transition to payment under the PPS and choosing the option that was financially beneficial to each facility. Using that approach, we estimated that 43 percent of facilities would choose to opt out of the transition and determined the transition budget-neutrality adjustment to be a reduction of 3.1 percent. In the April 6, 2011 interim final rule with comment (76 FR 18930 through 18934), however, we updated the number of facilities that chose to opt out of the transition to 87 percent, based on actual election data that we received and recalculated a transition budget-neutrality adjustment of zero percent.

Given that the transition budget-neutrality adjustment required under section 1881(b)(14)(A)(ii) of the Act applies in each year of the transition, we must update the transition budget-neutrality adjustment for CY 2012. In the proposed rule (76 FR 40506), we noted that we were not proposing for CY 2012 to change the methodology used to calculate the second part of the budget-neutrality adjustment. However, we proposed to use more updated data. In order to ensure that total payments under the transition equal total payment amounts without a transition, we would reduce all payments to ESRD facilities in CY 2012 by a factor that is equal to 1 minus the ratio of estimated payments under the ESRD PPS if there were no transition to the total estimated payments under the transition.

In the proposed rule, we explained that we started with 2009 utilization data from claims, as 2009 was the latest complete year of claims data available of complete claims data. In this final rule, we used 2010 claims as it is the latest available year. Using price growth factors for CY 2011 and CY 2012 that are discussed in the impact analysis in section I.VII.B.1 of this final rule, we updated the CY 2010 utilization data to

CY 2011 and CY 2012 payments. We then took the estimated CY 2012 payments under the full ESRD PPS and the blended payments under the transition based on actual facility election data and compared these estimated payments to the total estimated payments in CY 2012 as if all facilities had elected to receive payment under the full ESRD PPS. We then calculated the transition budget-neutrality factor to be 1 minus the ratio of estimated payments under the ESRD PPS if there were no transition to the total estimated payments under the transition, which results in zero percent. Therefore, for CY 2012, we proposed that a zero percent reduction to all payments would be made to ESRD facilities (that is, the zero percent adjustment would be applied to both the blended payments under the transition and payments made under the 100 percent ESRD PPS). We solicited comments on the proposed second part of CY 2012 transition budget-neutrality adjustment methodology. The comments and our responses are set forth below.

Comment: Several national associations and one dialysis organization supported the zero percent transition budget-neutrality adjustment for CY 2012. One commenter indicated that the proposed rule appropriately reflected that a greater percentage of ESRD facilities than estimated elected to receive payment under the ESRD PPS.

Response: We thank the commenters for their support. Therefore, in this final rule, we are finalizing the proposed second part of the transition budget-neutrality adjustment and the zero percent budget-neutrality adjustment for CY 2012.

5. Low-Volume Facility Provisions

Section 1881(b)(14)(D)(iii) of the Act requires a low-volume payment adjustment that ''reflects the extent to which costs incurred by low-volume facilities (as defined by the Secretary) in furnishing renal dialysis services exceed the costs incurred by other facilities in furnishing such services, and for payment for renal dialysis services furnished on or after January 1, 2011, and before January 1, 2014, such payment adjustment shall not be less than 10 percent''. We established the low-volume payment adjustment, including the methodology we used to develop the low-volume treatment threshold in the CY 2011 ESRD PPS final rule (75 FR 49117 through 49125). Because the analysis included data that spanned a 3-year period, we defined a low-volume ESRD facility as a facility that is able to maintain its low-volume status each year of the 3-year period. This timeframe provided us with a sufficient span of time to view consistency in business operations through the data. Under 42 CFR 413.232(b), a low-volume facility is an ESRD facility that: (1) Furnished less than 4,000 dialysis treatments in each of the 3 years preceding the payment year and (2) has not opened, closed, or received a new provider number due to a change in ownership during the 3 years preceding the payment year. Under § 413.232(c), the number of treatments shall be equal to the aggregate number of treatments furnished by other ESRD facilities that are both under common ownership and 25 road miles or less from the ESRD facility in question. This geographic proximity criterion is only applicable to ESRD facilities that are Medicare certified on or after January 1, 2011. Section 413.232(f) requires an ESRD facility to provide an attestation statement to their respective fiscal intermediary or Medicare administrative contractor (FI/MAC) that the facility meets all the criteria in order to receive the low-volume adjustment. We note that furnishing 4,000 treatments in a year equates to approximately 25 patients per year receiving three dialysis treatments a week (or hemo-equivalent treatments).

In the proposed rule, we discussed § 413.232 and clarified that the ''payment year'' is the period of time that we use for determining payment to ESRD facilities, which is a calendar year, and that eligibility years mean the 3 years preceding the payment year and are based on cost reporting years (76 FR 40506). We made this clarification to ensure that ESRD facilities and their respective FI/MACs understand the distinction between eligibility (which is based on cost reporting years) and the payment year (when ESRD facilities can begin to receive the low-volume payment adjustment).

We did not seek comments on the clarifications of the payment and cost report years, however, we received three comments indicating the clarifications were helpful.

In the proposed rule (76 FR 40506 and 40507), we proposed to establish the process for CY 2012 and each year thereafter, that an ESRD facility would be required to follow when submitting its attestation to notify its FI/MAC that it is eligible for the low-volume payment adjustment. We further explained that the attestation is required because: (1) ESRD facility's cost reporting periods vary and may not be based on the calendar year; and (2) the cost reports are due 5 months after the close of the cost reporting period (that is, there is a lag in the cost reporting submission). Thus, the FI/MACS may not have the cost report for the third year to determine eligibility and would need to rely on the attestation for that year. We proposed that if an ESRD facility believes that it is eligible for the low-volume adjustment, the ESRD facility would be required to submit an attestation to its respective FI/MAC no later than November 1st of each year, and proposed to amend the regulation text at § 413.232(f) (76 FR 40507). We noted that this timeframe provides 60 days for a FI/MAC to verify the cost report information and update the systems (76 FR 40507). We explained that if ESRD facilities are receiving the low-volume adjustment for the CY 2011 payment year, those ESRD facilities should submit another attestation to their respective FI/MAC no later than November 1, 2011, to qualify for the low-volume adjustment for the CY 2012 payment year. An ESRD facility must continue to attest that it is a low-volume facility for each subsequent payment year it believes it is eligible for the low-volume facility adjustment.

We explained that if the FI/MAC does not receive an ESRD facility's attestation stating that the ESRD facility is eligible for the low-volume adjustment on or before November 1 prior to the payment year, the ESRD facility would not receive the low-volume adjustment for that payment year. We also noted that in the event a dialysis organization submits the low-volume attestation on behalf of its ESRD facilities, the dialysis organization will be required to identify each ESRD facility by name and provider number and submit them by the November 1 deadline.

We solicited comment on our proposal and the proposed regulation text changes at § 413.232(f).

We did not receive any comments and, therefore, in this final rule, we are finalizing a yearly November 1 deadline for attestation submission and we are revising the regulation at § 413.232(f) to reflect this date for CY 2012 and each year thereafter. However, because the CY 2012 final rule will not be effective before November 1, 2011, we are finalizing a later low-volume attestation submission deadline of January 3, 2012, for attestations that pertain to the CY 2012 low-volume adjustment. We believe this due date provides facilities sufficient time to submit an attestation and allows the agency (that is, the FI/MACs) time to process submissions. In addition, a later date is not possible since the CY 2012 payment year will be underway. Accordingly, we also are

revising the regulation at § 413.232(f) to reflect this change.

In the proposed rule, we indicated that the ESRD facility's cost reports for the cost reporting periods ending in the 3 years immediately preceding the payment year must report costs for 12-consecutive months (76 FR 40507). For example, an FI/MAC should not consider a short period cost report (that is, reporting costs for less than 12 months which may occur for new facilities or facilities under new ownership), for low-volume eligibility. Specifically, when an ESRD facility is assessing its eligibility for the low-volume adjustment and preparing its attestation, the ESRD facility should look at its 12-consecutive month cost reports for the cost reporting periods that end in the 3 years immediately preceding the payment year.

As we indicated previously, the FI/MAC may not have a final-settled cost report for all 3 years needed to complete the ESRD facility's verification and we provided examples of such situations (76 FR 40507). Therefore, we proposed to amend the regulations at § 413.232(b)(1) and (b)(2) to clarify the meaning of year with regard to the treatment threshold that is used for determining low-volume eligibility and how it relates to the payment year. This proposed change to the regulations would make clear that the ESRD facility's cost reports for the 3 years immediately preceding the payment year must report costs for 12-consecutive months, and provide clarification that in the absence of an ESRD facility's final settled cost report, an FI/MAC can review the ESRD facility's as-filed cost report when determining if an ESRD facility meets the low-volume criteria. We believe that it is appropriate for the FI/MAC to determine eligibility based upon an as-filed cost report because the number of total treatments should not change between submission of the as-filed cost report and the final settled cost report. We solicited comment on the proposed changes at § 413.232(b)(1) and (b)(2). We did not receive any comments and, therefore, we are finalizing these proposed changes to the regulation at § 413.232(b)(1) and (b)(2).

In the proposed rule, we explained that if an FI/MAC receives an ESRD facility's attestation stating that the ESRD facility believes that it qualifies for the low-volume payment adjustment and then finds that the ESRD facility did not meet the low-volume criteria, the FI/MAC will discontinue application of the low-volume adjustment (76 FR 40508). If the ESRD facility does not remain low-volume for each of the 3 years (12-consecutive month cost reporting periods) immediately preceding the payment year, the ESRD facility is not eligible for the low-volume adjustment until it can demonstrate again that for 3 years (12-consecutive month cost reporting periods) it has met the low-volume criteria. The comments we received and our responses are set forth below.

Comment: One independent ESRD facility asked if an ESRD facility was determined not to qualify for the low-volume adjustment, would the low-volume adjustment be discontinued without payment implication.

Response: Medicare is obligated to provide appropriate payment. If an ESRD facility has not met the eligibility requirements as described in 42 CFR 413.232, the ESRD facility would not be entitled to receive the low-volume adjustment and the inappropriate low-volume payments made in that payment year would be recouped.

Comment: One commenter indicated that in the CY 2011 ESRD PPS final rule, we defined a low-volume facility at § 413.232(b)(2) as an ESRD facility that has not opened, closed, or received a new provider number due to a change in ownership during the 3 years preceding the payment year (75 FR 49118). The commenter pointed out that in the CY 2011 ESRD PPS final rule we did not finalize the phrase, ''or received a new provider number due to a change in ownership'' in the regulation text at § 413.232(b)(2) and in our discussion of the definition of a low-volume facility in this year's proposed rule we only referred to the phrase, ''or had a change in ownership'' (76 FR 40507). The commenter is concerned that if we do not include the phrase, ''or received a new provider number due to a change in ownership'' in the regulation text at § 412.232(b)(2) that it will negatively impact new owners of underperforming clinics that would otherwise wish to apply for the low-volume designation.

Response: We agree with the commenter that in the CY 2011 final rule we inadvertently omitted the phrase, ''or received a new provider number due to a change in ownership'' in the regulation text finalized at § 413.232(b)(2). In the preamble of both the CY 2011 ESRD PPS proposed and final rules (74 FR 49118 through 49919, 74 FR 49975), we made clear that under § 413.232(b), a low-volume facility is defined as an ESRD facility that ''has not opened, closed, or received a new provider number due to a change of ownership * * *''; however, we inadvertently omitted language from the regulation (74 FR 50024, 74 FR 49200). Therefore, in this final rule, we are making a technical correction to the regulation text at § 413.232(b)(2) to reflect that a low-volume facility is an ESRD facility that has not open, closed, or received a new provider number due to a change in ownership in the 3 years preceding the payment year.

Comment: One independent ESRD facility questioned the policy that ESRD facilities must remain low volume (that is, provide less than 4,000 dialysis treatments) for three years immediately preceding the payment year or risk not qualifying for the low-volume adjustment until it can once again demonstrate it is low volume for three consecutive years. The commenter further stated that many small or rural dialysis facilities provide the only access to care in a geographic area and this policy requires the established low-volume facility to choose between providing access to care and significant, long term payment reductions. The commenter further stated that this policy could result in dialysis facilities denying care to avoid crossing the 4,000 threshold. The commenter suggested that CMS consider reducing the eligibility timeline for small facilities that have met the low-volume eligibility criteria so that they could re-qualify for the low-volume adjustment in the following year if their treatments returned to less than 4,000 per year.

Response: We do not agree with the commenter's assertion of the negative effects of the low-volume eligibility criteria. The low-volume adjustment is intended for ESRD facilities that are located in areas that have a population base resulting in less than 4,000 treatments per year and is not intended to account for fluctuations or business decisions that increase or decrease the number of treatments that can or would be provided. We do not believe that these fluctuations or changes in the population from year to year would in most circumstances result in a facility not being eligible for the low-volume adjustment. As we indicated in the CY 2011 ESRD PPS final rule (75 FR 49118 and 49119), we believe the low-volume adjustment should encourage small ESRD facilities to continue to provide access to care, but are concerned about potential disincentives that low-volume facilities could have regarding patient care. We are monitoring the number of facilities that are receiving the low-volume adjustment. Any changes in the low-volume methodology will be discussed in future rulemaking.

As for allowing facilities that lose low-volume status to requalify for low-volume status the next year, any changes in the low-volume eligibility

criteria would be addressed in future rulemaking.

6. Update to the Drug Add-On to the Composite Rate Portion of the ESRD Blended Payment Rate

Section 1881(b)(14)(E)(i) of the Act requires a four-year transition under the ESRD PPS. Under § 413.239, ESRD facilities were permitted to make a one-time election by November 1, 2011, to be excluded from the transition and receive full payment under the ESRD PPS. Under § 413.239, in CY 2012, ESRD facilities that elected to receive payment under the transition will be paid a blended amount that will consist of 50 percent of the basic case-mix adjusted composite payment system and 50 percent on the ESRD PPS payment. Thus, we must continue to update the composite rate portion of the blended payment amount during the ESRD PPS 4-year transition (CYs 2011 through 2013), which includes an update to the drug add-on.

Under section 1881(b)(12) of the Act, the basic case-mix adjusted composite payment system includes the services comprising the composite rate and an add-on to the composite rate component to account for the difference between pre-MMA payments for separately billed drugs and the revised drug pricing specified in the statute. For the drug add-on for CY 2012 (76 FR 40508 and 40509), we did not propose any changes to the methodology, but merely updated the data used in computing the drug add-on as described below.

a. Estimating Growth in Expenditures for Drugs and Biologicals in CY 2012

Section 1881(b)(12)(F) of the Act specifies that the drug add-on increase must reflect ''the estimated growth in expenditures for drugs and biologicals (including erythropoietin) that are separately billable * * *''. By referring to ''expenditures'', we believe the statute contemplates that the update would account for both increases in drug prices, as well as increases in utilization of those drugs.

To account for increases in drug prices and utilization, we used the 5 years of drug expenditure data based on ASP pricing and proposed to use this data for trend analysis (76 FR 40508). We then removed growth in enrollment for the same time period from the expenditure growth so that the residual reflects the per patient expenditure growth (which includes price and utilization combined).

To estimate drug expenditure growth using trend analysis for CY 2012, we looked at the average annual growth in total drug expenditures between 2006 and 2010. First, we estimated the total drug expenditures for all ESRD facilities in CY 2010. We used the final CY 2006 through CY 2009 ESRD claims data and the latest available CY 2010 ESRD facility claims, updated through December 31, 2010 (that is, claims with dates of service from January 1 through December 31, 2010, that were received, processed, paid, and passed to the National Claims History File as of December 31, 2010). We indicated that for this final rule, we intended to use additional updated CY 2010 claims with dates of service for the same timeframe (76 FR 40508). This updated CY 2010 data file would include claims received, processed, paid, and passed to the National Claims History File as of June 30, 2011.

We inflated the CY 2010 drug expenditures to estimate the June 30, 2011 update of the 2010 claims file. The net adjustment to the CY 2010 claims data was an increase of 11.62 percent to the 2010 expenditure data, which allowed us to more accurately compare the 2009 and 2010 drug expenditure data to estimate per patient growth. Next, we calculated the average annual change in drug expenditures from 2006 through 2010. This average annual change showed an increase of 1.4 percent in drug expenditures from 2006 through 2010 (76 FR 40508). We used this 1.4 percent increase to project drug expenditures for both 2011 and 2012.

For the final rule, using the full-year 2010 drug expenditure figure, we calculated the average annual change in drug expenditure from 2006 through 2010. This average annual change showed an increase of 1.0 percent in drug expenditures from 2006 through 2010. We used this 1.0 percent increase to project drug expenditures for both 2011 and 2012. We note, the change in the drug expenditures increase is a result of updated data.

b. Estimating per Patient Growth

In the proposed rule, we explained that once we had the projected growth in drug expenditures from 2011 to 2012, we calculated per patient growth between CYs 2011 and 2012 by removing the estimated growth in enrollment data between CY 2011 and CY 2012 (76 FR 40508). We estimate a 4.2 percent estimated growth in enrollment between CY 2011 and CY 2012. To obtain the per-patient estimated growth in expenditures, we divided the total drug expenditure change between 2011 and 2012 (1.014) by enrollment growth of 4.2 percent (1.042) for the same timeframe. The result was a per-patient growth factor equal to 0.973 (1.014/1.042 = 0.973). Thus, we projected a 2.7 percent decrease (2.7 percent = .027 = 0.973 − 1) in per patient growth in drug expenditures between 2011 and 2012.

For this final rule, we estimate a 4.3 percent estimated growth in enrollment between CY 2011 and CY 2012. To obtain the per-patient estimated growth in expenditures, we divided the total drug expenditure change between 2011 and 2012 (1.010) by enrollment growth of 4.3 percent (1.043) for the same timeframe. The result is a per-patient growth factor equal to 0.968 (1.010/1.043 = 0.968). Thus, in this final rule, for CY 2012 we are projecting a 3.2 percent decrease (− 3.2 percent = 1.010/1.043 − 1 = 0.968 − 1) in per patient growth in drug expenditures between 2011 and 2012.

c. Applying the Growth Update to the Drug Add-On Adjustment

In the CY 2006 PFS final rule (71 FR 69683), we applied the projected growth update percentage to the total amount of drug add-on dollars established for CY 2005 to establish a dollar amount for the CY 2006 growth update. In addition, we projected the growth in dialysis treatments for CY 2006 based on the projected growth in ESRD enrollment. We divided the projected total dollar amount of the CY 2006 growth by the projected growth in total dialysis treatments to develop the per treatment growth update amount. This growth update amount, combined with the CY 2005 per treatment drug add-on amount, resulted in an average drug add-on amount per treatment of $18.88 (or a 14.5 percent adjustment to the composite rate) for CY 2006.

In the CY 2007 PFS final rule with comment period (71 FR 69684), as a result of public comments, we revised our update methodology by applying the growth update to the per treatment drug add-on amount. That is, for CY 2007, we applied the growth update factor of 4.03 percent to the $18.88 per treatment drug add-on amount resulting in an updated per treatment drug add-on amount of $19.64 per treatment (71 FR 69684). For CY 2008, the per treatment drug add-on amount was updated to $20.33. In the CY 2009, 2010 and 2011 PFS final rule with comment period (73 FR 69755 through 69757, 74 FR 61923, and 75 FR 73485, respectively), we applied a zero update to the per treatment drug add-on amount resulting in a per treatment drug add-on amount of $20.33. As discussed in detail below, in this final rule, for CY 2012, we are finalizing a zero update to the per treatment drug add-on amount of $20.33 established in CY 2008.

d. Update to the Drug Add-On Adjustment for CY 2012

We estimated a 1.4 percent increase in drug expenditures between CY 2011 and CY 2012 (76 FR 40509). Combining this increase with a 4.2 percent increase in enrollment, as described above, we projected a 2.7 percent decrease in per patient growth of drug expenditures between CY 2011 and CY 2012. Therefore, we projected that the combined growth in per patient utilization and pricing for CY 2012 would result in a decrease to the drug add-on equal to 0.4 percentage points. This figure was derived by applying the 2.7 percent decrease to the CY 2011 drug add-on of $20.33. This resulted in a revised drug add-on of $19.78, which is 14.0 percent of the proposed CY 2012 base composite rate of $141.52. If we were to apply no decrease to the drug add-on of $20.33, this would result in a 14.4 percent drug add-on. However, similar to last year and as indicated above, we proposed a zero update to the drug add-on adjustment. We explained in the proposed rule that we believed this approach is consistent with the language under section 1881(b)(12)(F) of the Act, which states in part that ''the Secretary shall annually increase'' the drug add-on amount based on the growth in expenditures for separately billed ESRD drugs. Our understanding of the statute contemplates ''annually increase'' to mean a positive or zero update to the drug add-on. Therefore, we proposed to apply a zero update and maintain the $20.33 per treatment drug add-on amount for CY 2012. The comments and our responses are set forth below.

Comment: Two commenters supported our proposed zero drug-add.

Response: We thank the commenters for their support.

Comment: One commenter indicated that ESA usage is overstated in 2006 through 2010 and that this would have an effect on the drug add-on and the ESRD PPS base rate calculations. The commenter recommended that we develop an ESA adjuster for the ESRD PPS base rate.

Response: We used the best available data to compute the drug add-on and the base rate. We continue to believe that the information on ESRD claims represent the best information currently available to the agency. Because we are required under section 1881(b)(14)(A)(ii) of the Act to use the lowest utilization year (which we determined to be 2007), we did not have discretion on the data we used in calculating the ESRD PPS base rate. We note that it is common for utilization of services to change after implementation of a PPS. That is why we periodically review our payment systems to determine if a refinement is warranted. In addition, if we were to adjust for ESA over usage in computing the drug add-on, this would lower the trend and the drug add-on would become more negative. As we discussed above, section 1881(b)(12)(F) of the Act, precludes a reduction of the drug add-on because the statute requires that we annually increase the drug add-on.

In this final rule, for CY 2012, we estimate a 1.0 percent increase in drug expenditures between CY 2011 and CY 2012. Combining this increase with a 4.3 percent increase in enrollment, we project a 3.2 percent decrease in per patient growth of drug expenditures between CY 2011 and CY 2012. Therefore, we project that the combined growth in per patient utilization and pricing for CY 2012 would result in a decrease to the drug add-on equal to 0.4 percentage points. This figure is derived by applying the 3.2 percent decrease to the CY 2011 drug add-on of $20.33. This results in a revised drug add-on of $19.69, which is 13.9 percent of the final CY 2012 base composite rate of $141.94. If we were to apply no decrease to the drug add-on of $20.33, this would result in a 14.3 percent drug add-on. Similar to last year and as discussed above, for CY 2012, we are finalizing a zero update to the drug add-on and maintaining the $20.33 per treatment drug add-on amount.

The current $20.33 per treatment drug add-on reflected a 14.7 percent drug add-on adjustment to the composite rate in effect for CY 2011. Using the latest ESRDB market basket minus productivity adjustment to update the composite rate portion of the ESRD PPS payment (forecast of 2.1 percent in 2012 effective January 1, 2012, as discussed in section I.B.2.b. of this final rule), results in a decrease to the CY 2012 drug add-on adjustment from 14.7 to 14.3 percent in order to maintain the drug add-on at $20.33. This decrease occurs because the drug add-on adjustment is a percentage of the composite rate. Since the final CY 2012 composite rate is higher than the CY 2011 composite rate, and since the drug add-on remains at $20.33, the percentage decreases. Therefore, we are finalizing for CY 2012 the drug add-on adjustment of 14.3 percent to the composite rate.

7. Updates to the Wage Index Values and Wage Index Floor for the Composite Rate Portion of the Blended Payment and the ESRD PPS Payment

Section 1881(b)(14)(D)(iv)(II) of the Act provides that the ESRD PPS may include such other payment adjustments as the Secretary determines appropriate, such as a payment adjustment by a geographic wage index, such as the index referred to in section 1881(b)(12)(D) of the Act. In the CY 2011 ESRD PPS final rule (75 FR 49117 through 49117) and CY 2011 PFS final rule (75 FR 73486), we finalized the wage index policy under the ESRD PPS. Specifically, under the ESRD PPS, we have adopted the same method and source of wage index values used previously for the basic case-mix adjusted composite payment system.

We use the Office of Management and Budget's (OMB's) Core Based Statistical Area (CBSA)-based geographic area designations to define urban and rural areas and corresponding wage index values (76 FR 40509). In addition, the wage index values used under the ESRD PPS are the inpatient prospective payment system (IPPS) wage index values calculated without regard to geographic reclassifications authorized under sections 1881(d)(8) and (d)(10) of the Act, and utilize pre-floor hospital data that are unadjusted for occupational case mix. The CBSA-based geographic area designations are described in OMB Bulletin 03–04, originally issued June 6, 2003, and are available online at *http://www.whitehouse.gov/omb/bulletins/b03–04.html*. In addition, OMB has published subsequent bulletins regarding CBSA changes, including changes in CBSA numbers and titles. All ESRD rules and notices are considered to incorporate the CBSA changes published in the most recent OMB bulletin that applies to the hospital wage index used to determine the current ESRD wage index. The OMB bulletins may be accessed online at *http://www.whitehouse.gov/omb/bulletins/index.html*.

Under the ESRD PPS, we adopted a wage index floor during the transition, though we intended to gradually reduce the ESRD wage index floor (76 FR 40509, 75 FR 49117, 75 FR 73486). In the proposed rule (76 FR 40502–40503), we did not propose any changes to the labor-related share for the ESRD PPS and the composite rate portion of the blend and proposed to continue to use a labor-related share of 41.737 percent for CY 2012 for the ESRD PPS. If an ESRD facility elected to transition to the PPS, the labor-related share for the

composite rate portion of the blended payment is 53.711 percent. We proposed to continue to use the labor-related share of 53.711 percent for the composite rate portion of the blended payment for all the years of the transition. As discussed in section I.2.b of this final rule, we finalized the proposed labor-related share for the ESRD PPS and the composite rate portion of the blended payment. Finally, the wage data used to construct the wage index under the ESRD PPS is updated annually, based on the most current data available and based on OMB's definitions and corresponding wage index values.

As we previously indicated, because ESRD facilities could elect to receive a blended payment during the transition, we continue to update the composite rate portion of the ESRD PPS blended payment, including adjusting payments for geographic differences in area wage levels (76 FR 40509, 75 FR 40163). We did not propose any changes to the methodology for the wage index used to adjust the composite rate portion of the ESRD PPS blended payment. However, we did propose to update the wage index values and the wage index budget-neutrality adjustment factor for CY 2012. We did not receive any comments pertaining to our proposal to update the wage index values and the wage index budget-neutrality adjustment factor for CY 2012 for the composite rate portion of the blended payment under the transition. Consequently, we are finalizing our proposal.

Although we did not propose to make any changes to the methodology for updating the CY 2012 wage index under the ESRD PPS (that is, for full ESRD PPS payments and the ESRD PPS portion of the blended payment under the transition), we did propose a wage index budget-neutrality adjustment factor to be applied in CY 2012 and in subsequent years for the ESRD PPS (76 FR 40509).

We received one comment as set forth below.

Comment: One independent ESRD facility indicated that it based its decision to receive payment under the transition because the CY 2011 composite rate wage index value for the facility's area was higher than the wage index value for the ESRD PPS. The commenter stated that the higher composite rate wage index would be beneficial to those facilities that opted to receive payment under the transition. The commenter indicated that the variances between the CY 2012 proposed composite rate and ESRD PPS wage index values are not as great as compared to the CY 2011 variance, which was not anticipated by the commenter at the time the election was made to transition into the ESRD PPS and stated that this is not beneficial for those dialysis facilities transitioning to the ESRD PPS.

Response: The commenter is correct that the differences in the CY 2012 composite rate and ESRD PPS wage index values in the proposed rule are not as significant as they were in the CY 2011 ESRD PPS final rule. The principle reason for the differences in the composite rate and ESRD PPS wage index values in the CY 2011 final rule is that the wage index budget neutrality adjustment was applied to the composite rate values, while budget neutrality for the ESRD PPS was achieved through the overall 98 percent budget-neutrality requirement (76 FR 40510). The reason the variances between the CY 2012 proposed composite rate and ESRD PPS wage index values are less pronounced is because the proposed wage index budget-neutrality adjustment for CY 2012 for the composite rate portion of the blended payment is lower than the budget-neutrality adjustment factor for CY 2011. As we discussed above, in detail and in section I.C.1 of this final rule, the wage index budget-neutrality adjustment for the ESRD PPS and the ESRD PPS portion of the blended payment is not applied to the wage index values, but rather to the ESRD PPS base rate. Therefore, the variance described by the commenter is related solely to the wage index budget-neutrality adjustment for the composite rate portion of the blended payment. A comparison to the ESRD PPS wage index value is not appropriate because the composite rate wage index has a wage index budget-neutrality adjustment applied while the ESRD PPS wage index does not.

Since we did not receive any comments pertaining to our proposals regarding the method of applying the wage index budget-neutrality adjustment, that is, applying the wage index budget-neutrality adjustment to the wage index values for the composite rate portion of the blended payment and applying the wage index budget-neutrality adjustment to the ESRD PPS base rate for the PPS portion of the blended payment and the ESRD PPS payment, and for the reasons we discussed previously, we are finalizing those policies.

a. Reduction to the ESRD Wage Index Floor

The wage index floor for CY 2011 is 0.600 (75 FR 49116 and 49117 and 75 FR 73487). For CY 2012 and CY 2013, we proposed to continue to reduce the wage index floor by 0.05 for each of the remaining years of the transition (that is, for CY 2012, the wage index value would be reduced from 0.600 to 0.550, and further reduced to 0.500 for CY 2013) (76 FR 40510). The ESRD wage index floor value of 0.550 would be applied to areas with wage index values that are below the proposed wage index floor. Beginning January 1, 2014, we proposed that the wage index floor would no longer be applied because the wage index floor would be lower than areas with low wage index values. In the CY 2012 ESRD PPS proposed rule, we stated that we continue to believe that a gradual reduction in the floor is needed to support continuing patient access to dialysis in areas that have low wage index values, especially in areas where the wage index values are below the current wage index floor—specifically, ESRD facilities located in Puerto Rico (76 FR 40510). We solicited comments on the proposal to continue to gradually reduce the wage index floor in CYs 2012 and 2013 and, the elimination of the floor in CY 2014. The comments we received and our responses are set forth below.

Comment: Three commenters responded regarding our proposal to reduce and eventually eliminate the wage index floor. One commenter requested that the wage index floor be maintained for rural dialysis facilities due to their higher staffing costs, which could aggravate disparities in care and might impair access to care in rural areas. One independent ESRD facility indicated that the reduction of the wage index floor threatens facilities with low wage index values and may result in access to care problems. One ESRD organization requested that we reconsider establishing a wage index floor after the transition because the commenter believes that eliminating the floor would be detrimental to small dialysis organizations (SDOs). The commenter also stated that some small facilities are located in a single community and, as such, are not able to spread their operating costs as larger organizations. The commenter further stated that these facilities are in parts of the country where the wage index is lowest, and the absence of a floor threatens their survival and negatively impacts access to care.

Response: In the proposed rule, we proposed to reduce the floor by 0.05 for CYs 2012 and 2013 and to eliminate the floor beginning in 2014 (76 FR 40509 through 40510). We have been reducing the wage index floor since CY 2006 when ESRD facilities began to transition

to the CBSAs and the wage index floor was 0.900 (70 FR 45799). We have reduced the wage index floor by 0.05 each year since then. In CY 2011, the floor is 0.600 and only impacts ESRD facilities located in Puerto Rico, because no other ESRD facilities are located in areas with a wage index value below 0.600. This is also the case in CY 2012, when the 0.05 reduction will bring the floor to 0.550. We continue to believe that artificially adjusting wage index values by substituting a wage index floor is not an appropriate method to address low wages in certain geographic locations. However, we are willing to take the points made by the commenters into consideration for future rulemaking with regard to the issue of eliminating the wage index floor in the future.

With regard to the comment that small facilities are located in areas with the lowest wage index values and the negative effects of eliminating the floor, we note that the commenter is located in West Virginia and in CY 2011, has a wage index value of 0.7055, well above the wage index floor of 0.600. Therefore, the reduction of the floor does not impact this provider. With regard to areas that are impacted by the reduction of the wage index floor (that is Puerto Rico), we note that the overall impact (discussed in section VII.B of this final rule) of the changes in the outlier policy discussed in section I.C.10 of this final rule and the wage index results in a 0.3 percent increase in estimated payments. Therefore, we do not believe that ESRD facilities will be negatively impacted by the reduction in the wage index floor. We note that the wage index values reflects\ hospital wages, unadjusted for occupational mix. Therefore, we believe it reflects ESRD facility staff wages. With regard to the comment that some small facilities are located in a single community and, as such, are not able to spread their operating costs as larger organizations can, we do not understand the relationship between the wage index floor and limitations a facility may have to spread its operating costs.

After considering the comments received, we are finalizing the 0.05 reduction to the wage index floor for CYs 2012 and 2013, resulting in a wage index floor of 0.550 and a wage index floor of 0.500, respectively. Although we continue to believe that artificially adjusting the wage index value using a floor, which does not reflect actual wages paid in that area, we will reconsider the floor in CY 2014.

b. Policies for Areas With No Hospital Data

In CY 2006, while adopting the CBSA designations for the basic case-mix adjusted composite payment system, we identified a small number of ESRD facilities in both urban and rural areas where there are no hospital data from which to calculate wage index values. Since there were ESRD facilities in these areas, we developed policies for each of these areas. In the CY 2011 ESRD PPS final rule (75 FR 49117), we finalized the methodology we have used for urban areas with no hospital data, that is, we compute the average wage index value of all urban areas within the State and use that value as the wage index. We also finalized the methodology established for rural areas with no hospital data originally adopted in the CY 2008 PFS final rule (72 FR 66283), in which we computed the wage index using the average wage index values from all contiguous CBSAs to represent a reasonable proxy for that rural area. For rural Massachusetts, we determined that the borders of Dukes and Nantucket Counties are continguous with Barnstable and Bristol counties. Under the methodology, the values for these counties are averaged to establish the wage index value for rural Massachusetts. For rural Puerto Rico, we finalized a policy to use the wage index floor as the wage index value, since all rural Puerto Rico areas were subject to the floor.

In the proposed rule, we did not propose to change these methodologies. We proposed for CY 2012 and for future years, to continue to use the methodologies we adopted for establishing wage index values in both urban and rural geographic areas where there are no hospital wage data from which to calculate wage index values for ESRD facilities (76 FR 40510).

We did not receive any comments on our proposed methodology for computing a wage index value for areas without hospital data for urban and rural geographic areas, or for Puerto Rico. Therefore, for CY 2012 and future years, we are finalizing our methodologies for computing a wage index value for areas without hospital data for urban and rural geographic areas and for Puerto Rico. For urban areas, we will compute the average wage index value of all urban areas within the State; for rural areas, we will compute the wage index using the average wage index values from all contiguous CBSAs; and for rural Puerto Rico, we will use the wage index floor.

c. Wage Index Budget-Neutrality Adjustment

We have broad discretion under section 1881(b)(14)(D)(iv)(II) of the Act to develop a geographic wage index. In addition, that section cites the wage index under the basic case-mix adjusted composite payment system as an example. We have previously interpreted the statute for the basic case-mix adjusted composite payment system (section 1881(b)(12)(D) of the Act) as requiring that the geographic adjustment be made in a budget-neutral manner. In CY 2011, we did not apply a wage index budget-neutrality adjustment factor under the ESRD PPS because budget-neutrality was achieved through the overall 98 percent budget-neutrality requirement in section 1881(b)(14)(A)(ii) of the Act.

Given our authority to develop a wage index under section 1881(b)(14)(D)(iv)(II) of the Act, as well as the authority to use the geographic index under section 1881(b)(12)(D) of the Act, we proposed to apply the wage index in a budget-neutral manner under the ESRD PPS using a wage index budget-neutrality adjustment factor (76 FR 40510). However, as we discuss in greater detail below, we proposed that under the ESRD PPS, we would apply the wage index budget-neutrality adjustment factor to the ESRD PPS base rate.

Under the basic case-mix adjustment composite payment system, we began applying the wage index budget-neutrality adjustment factor in CY 2006 (70 FR 70171). During the ESRD PPS transition, we proposed to continue to apply the wage index budget-neutrality adjustment to the wage index values for the composite rate portion of the ESRD PPS blended payment for CYs 2012 and 2013 (76 FR 40510). We noted that continuing to apply the budget-neutrality adjustment to the wage index for the composite rate portion of the ESRD PPS blended payment allows ESRD facilities going through the transition to continue to use a methodology to which they are accustomed.

However, under the ESRD PPS, we believed that applying the wage index budget-neutrality adjustment factor to the ESRD PPS base rate would be consistent with the application of the wage index budget-neutrality adjustment factor in other prospective payment systems. We also believed that applying the wage index budget-neutrality adjustment factor to the ESRD PPS base rate is simpler and more straightforward in application and calculation. Applying the wage index budget-neutrality adjustment factor to the ESRD PPS base rate produces results that are not measurably different from applying the adjustment factor to the wage index, as is done for the composite rate portion of the blended payment during the transition. We sought

comment on our proposal to apply the wage index budget-neutrality adjustment factor to the ESRD PPS base rate for purposes of the ESRD PPS payments and the ESRD PPS component of the blended payments during the transition.

We did not receive any comments on our proposal to apply the wage index budget-neutrality adjustment to the ESRD PPS base rate and to continue to apply the wage index budget-neutrality adjustment to the wage index values for the composite rate portion of the blended payment. Therefore, for CY 2012 and subsequent years, we are finalizing our proposal to apply the wage index budget-neutrality adjustment factor to the ESRD PPS base rate for the purposes of the ESRD PPS payments and the ESRD PPS portion of the blended payment during the transition. We are also finalizing our proposal to continue to apply the wage-index budget-neutrality adjustment factor directly to the ESRD wage index values for the composite rate portion of the blended payment for CY 2012 and CY 2013.

Because the ESRD wage index is only applied to the labor-related portion of the composite rate, we computed the wage index budget-neutrality adjustment factor based on that portion. That is, the labor-related share of the composite rate portion of the blended payment of 53.711 percent. This labor-related share was developed from the labor-related components of the 1997 ESRD composite rate market basket that was finalized in the 2005 PFS final rule (70 FR 70168). The labor-related share of the ESRD PPS is 41.737 percent labor (that is, the portion of the ESRD PPS payment rate and the ESRD PPS portion of the blended payment). As discussed in the CY 2011 ESRD PPS final rule (75 FR 49161), we used the 2008-based ESRDB market basket cost weights to determine the labor-related share for ESRD facilities under a bundled system. Under the ESRDB market basket, the labor-related share for ESRD facilities is 41.737. These figures represent the sum of Wages and Salaries, Benefits, Housekeeping and Operations, All Other Labor-related Services, 87 percent of the weight for Professional Fees and, 46 percent of the weight for Capital-related Building and Equipment expenses.

To compute the proposed CY 2012 wage index budget-neutrality adjustment factors, we proposed to use the fiscal year (FY) 2012 pre-floor, pre-reclassified, non-occupational mix-adjusted hospital data to compute the wage index values, 2010 outpatient claims (paid and processed as of December 31, 2010), and geographic location information for each facility which, may be found through Dialysis Facility Compare (76 FR 40510–40511). Dialysis Facility Compare can be found at the Dialysis Facility Compare Web page on the CMS Web site at *http://www.cms.hhs.gov/DialysisFacilityCompare/*. The FY 2012 hospital wage index data for each urban and rural locale by CBSA may also be accessed on the CMS Web site at *http://www.cms.hhs.gov/AcuteInpatientPPS/WIFN/list.asp*. The wage index data are located in the section entitled, ''FY 2012 Final Rule Occupational Mix Adjusted and Unadjusted Average Hourly Wage and Pre-Reclassified Wage Index by CBSA.''

We did not receive any comments on the methodology used to compute the budget-neutrality adjustment factors. Therefore, for CY 2012 and beyond, we are finalizing the methodology we proposed for computing the CY 2012 wage index budget-neutrality adjustment factors (76 FR 40510 and 40511). Using treatment counts from the 2010 claims and facility-specific CY 2011 payment rates, we computed the estimated total dollar amount each ESRD facility would have received in CY 2011. The total of these payments became the target amount of expenditures for all ESRD facilities for CY 2012. Next, we computed the estimated dollar amount that would have been paid for the same ESRD facilities using the final ESRD wage index for CY 2012. The total of these payments becomes the new CY 2012 amount of wage-adjusted payment rate expenditures for all ESRD facilities.

After comparing these two dollar amounts (target amount divided by the new CY 2012 amount), we calculated two wage index budget-neutrality adjustment factors that, when multiplied by the applicable CY 2012 estimated payments, would result in aggregate payments to ESRD facilities that would remain budget-neutral when compared against the target amount of payment rate expenditures. The first factor was applied to the ESRD PPS base rate. The second factor was applied to the wage index values for the composite rate portion of the blended payment. Therefore, in this final rule, we are finalizing for CY 2012, the wage index budget-neutrality adjustment factor for the composite portion of the ESRD PPS blended payment of 1.002830, which is applied directly to the ESRD wage index values. For the ESRD PPS (that is, for the full ESRD PPS payments and the ESRD PPS portion of the blended payments during the transition), we are finalizing the wage index budget-neutrality adjustment factor of 1.001520 which is applied to the ESRD PPS base rate. Under the ESRD PPS, the wage index floor for CY 2012 is 0.550 because the wage index budget-neutrality adjustment factor is applied to the base rate.

As we indicated in the proposed rule (76 FR 40511), because we apply the wage index budget-neutrality adjustment factor to the wage index values to ensure budget-neutrality under the composite rate portion of the blended payment, we also apply the wage index budget-neutrality adjustment factor to the wage index floor. We note this would apply to areas in Puerto Rico subject to the floor. Therefore, for the composite rate portion of the blended payment, we are finalizing for CY 2012 to apply the wage index budget-neutrality adjustment factor to the wage index floor of 0.550 which results in an adjusted wage index floor of 0.552 (1.002830×0.550).

d. ESRD PPS Wage Index Tables

The CY 2012 ESRD wage index tables, referred to as Addendum A (ESRD facilities located in urban areas), and Addendum B (ESRD facilities located in rural areas) are posted on the CMS Web site at: *http://www.cms.gov/ESRDPayment/PAY/list.asp*. The wage index tables list two separate columns of wage index values. One column represents the wage index values for the composite rate portion of the blended payment to which the wage index budget-neutrality adjustment factor has been applied. The other column lists the wage index values for the ESRD PPS, which does not reflect the application of the wage index budget-neutrality adjustment factor, because as we discussed above, we apply the wage index budget-neutrality adjustment factor to the ESRD PPS base rate.

8. Drugs

a. Vancomycin

In the CY 2011 ESRD PPS final rule (75 FR 49050 through 49052), we stated that antibiotics used for the treatment of venous access infections and peritonitis, are renal dialysis services under the ESRD PPS. Payments for anti-infective drugs in injectable forms (covered under part B) and oral or other forms of administration (formerly covered under part D) used in the treatment of ESRD, were included in computing the final ESRD PPS base rate and, would not be separately paid under the ESRD PPS. We also noted that the oral versions of vancomycin are not used for ESRD-related conditions and, therefore, would not be considered a renal dialysis

service. We further stated that any anti-infective drug or biological used for the treatment of ESRD-related conditions would be considered a renal dialysis service and, not eligible for separate payment. We noted this policy also applies to any drug or biological that may be developed in the future. We established edits to ensure that separate payment could not be made to ESRD facilities for vancomycin which has traditionally been used by ESRD facilities to treat access infections.

In the proposed rule (76 FR 40511), we acknowledged that since the publication of the CY 2011 ESRD PPS final rule, we had received numerous comments indicating that vancomycin is indicated in the treatment of both ESRD and non-ESRD conditions, such as skin infections. We further stated that after consultation with our medical experts, we concurred with the commenters. Therefore, we proposed to eliminate the restriction on vancomycin to allow ESRD facilities to receive separate payment by placing the AY modifier on the claim for vancomycin when furnished to treat non-ESRD-related conditions. In accordance with ICD–9 guidelines, as described in the ESRD PPS final rule (75 FR 49107), the ESRD facility would also be required to indicate the diagnosis code for which the vancomycin is indicated. We noted that treatment of any skin infection that is related to renal dialysis access management would be considered a renal dialysis service and would continue to be paid under the ESRD PPS, and no separate payment would be made. We sought public comments on our proposal to eliminate the restriction on vancomycin to allow ESRD facilities to receive separate payment for these drugs when furnished to treat non-ESRD-related conditions. The comments we received and our responses are set forth below:

Comment: Two commenters suggested that we allow for separate payment for daptomycin when furnished by ESRD facilities for non-ESRD related conditions.

Response: We thank the commenter for the suggestion to allow for separate payment of daptomycin when used for non-ESRD related conditions. As noted above, we had established system edits to ensure that ESRD facilities could not be paid separately for both vancomycin and daptomycin. We will consider removing the system edit for daptomycin in future rulemaking.

Comment: We received six comments in support of our proposal to eliminate the restriction on vancomycin and allow for separate payment when furnished for non-ESRD-related conditions.

Response: We thank the commenters for their support. Consequently, in this final rule we are finalizing the proposal to eliminate the restriction on vancomycin to allow ESRD facilities to receive separate payment by placing the AY modifier on the claim for vancomycin when furnished to treat non-ESRD related conditions. In accordance with ICD–9 guidelines as described in the CY 2011 ESRD PPS final rule (75 FR 49107), the ESRD facility must indicate the diagnosis code for which the vancomycin is indicated. We reiterate that treatment of any skin infection that is related to renal dialysis access management would be considered a renal dialysis service and would continue to be paid under the ESRD PPS, and no separate payment would be made.

b. Drug Overfill

In the CY 2011 PFS final rule (75 FR 73466), we explained the methodology for Part B payment for drugs and biologicals that include intentional overfill, and that the Medicare average sales price (ASP) payment limit is based on the amount of drug conspicuously indicated on the labeling approved by the Food and Drug Administration (FDA). We indicated that we had become aware of situations where manufacturers intentionally included a small amount of overfill in drug containers, and that this overfill is provided at no extra charge to the provider. We also noted that we understood the intent of the intentional overfill was to compensate for product loss during the proper preparation and administration of a drug. We explained that ASP calculations are based on data reported by manufacturers, including ''volume per item''. Therefore, providers may only bill for the amount of drug product actually purchased and the cost that the product represents (75 FR 73467).

We stated in the proposed rule (76 FR 40511) that this part B provision applies under the ESRD PPS. We explained that ESRD facilities receiving blended payments under the transition would receive payments based on ASP for separately billable ESRD drugs and biologicals for the composite rate portion of the blend. In addition, under the ESRD PPS outlier policy, the ESRD-related drugs that ESRD facilities report on claims are priced for the outlier policy using ASP prices. Therefore, ESRD facilities may only report units and charges for drugs or biologicals actually purchased.

Comment: Three commenters expressed concern that the drug overfill policy was not appropriate under the ESRD PPS. One commenter stated that the use of overfill is an efficient operation and expressed concern that the new policy would lead to excessive wastage. A commenter disagreed with our assertion that overfill is provided by manufacturers without charge to the provider and stated that there would be additional costs if facilities are not allowed to maximize drug usage. The commenter believes the cost to providers includes the full amount of drug in each vial. One commenter stated that dialysis providers may and should administer overfill if clinically appropriate to reduce costs and waste. The commenter cited the administration of EPO as an example. One commenter stated that, ''* * * providers have been purchasing drugs with overfill amounts and use of the overfill amount has long been known by both the Office of Inspector General (OIG) and CMS.''

Response: We disagree with the commenters that believe our proposal would restrict the clinical use of intentional overfill. As we indicated in the CY 2011 PFS final rule (75 FR 73467), our policy here is not intended to limit the use of intentional overfill during the care of beneficiaries or in medical practice; such measures are beyond CMS' authority. Rather, the proposed rule merely set forth how and under what conditions we would make payment under the ESRD PPS outlier policy. Consistent with prior rulemaking, under our authority in section 1881(b)(14)(D)(ii) of the Act, we are adopting the ASP policy on overfill for purposes of calculating the outlier payment. We believe the use of the ASP policy for purposes of calculating the outlier payment is appropriate because, for the reasons stated, we believe overfill does not represent a cost to the facility; thus, overfill should not factor into our determination of outlier payments. This rule does not purport to regulate the use of overfill, only whether it is reimbursed under our outlier policy and the composite rate portion of the blended payment during the transition. Thus, whether we or the OIG had information about certain providers' purchase and use of overfill is irrelevant.

Comment: A large dialysis organization indicated that the drug overfill policy should not apply to ESRD facilities because the ASP payment regulation applies to drugs ''not paid on a cost or prospective payment system basis.'' The commenter contends it would not apply under the ESRD PPS even though outlier eligible drugs are priced using the ASP prices established under section 1847A of the Act. The commenter stated that CMS cannot

substitute the ASP method for a portion of the ESRD PPS. The commenter further contends that because dialysis providers may administer overfill, but CMS's proposal would prohibit them from submitting a claim that includes overfill, it appears that CMS expects providers either to inaccurately state the services furnished on the claims form or incur significant expense to separately track overfill amounts, which may be used for thousands of patients daily, resulting in unnecessary burden. The commenter opined that applying the ASP payment rule under the ESRD PPS is inconsistent with the policy objectives of a PPS leading to wastage if facilities continue to use single-use vials or extra expenses if facilities migrate to multi-dose vials.

Response: We disagree with these comments. First, as noted above, we proposed to incorporate into our outlier policy the policy for overfill under the ASP methodology; however, our authority to determine an outlier policy is found in section 1881(b)(14) of the Act, which calls for a prospective payment basis for renal dialysis services and authorizes an outlier payment adjustment. Thus, contrary to the commenter's assertion, we are paying for drugs subject to the ESRD PPS outlier policy under a prospective payment system, not under section 1847A of the Act. Under the outlier policy, we use the ASP methodology, which is based upon manufacturer reporting of the labeled amount of a drug and not any other amount (that is, overfill amount). Therefore, we are establishing that the ESRD PPS outlier policy does not include an amount for overfill. Further, the outlier policy was designed to provide additional payments for high cost patients. To the extent a patient receives drug amounts at no cost to the facility (that is, overfill amounts), that amount may not be attributed to the cost of that patient. Finally, because we are continuing to pay under the composite rate portion of the blended payment for separately billable drugs using the ASP payment methodology, we should continue to utilize the methodology for pricing drugs for the outlier policy.

Second, the commenter's contention about the scope of the ''incident to'' benefit reflects a misunderstanding of our proposal. We refer the commenter to discussion of the overfill policy in the CY 2011 PFS final rule (75 FR 73469), where we stated that our ASP overfill policy is not based on the ''incident to'' rules, but rather applies to all drugs and biologicals paid under section 1847A of the Act, regardless of setting. The ''incident to'' rules are similarly irrelevant to our proposal here. Our policy pertains only to how and whether we pay for drugs under our outlier policy under authority of section 1881(b)(14)(D)(ii) of the Act.

Third, we disagree with the commenters that our policy will require ESRD facilities to inaccurately reflect the services they furnish. We expect that providers will continue to maintain accurate medical records for all beneficiaries as well as accurate inventory records of all drugs that were actually purchased and appropriately billed to Medicare. We acknowledge that separate tracking of overfill may increase burden on ESRD facilities that were not doing so before. However, given that we have adopted ASP policies generally for outliers under the ESRD PPS and we rely on data reported under the ASP methodology to determine the outlier thresholds, even if we believed overfill were something other than free product, we would have no ability to account for it separately.

Finally, we disagree that our policy is inconsistent with waste reduction. As noted above, our policy does not apply to the use of overfill; rather, it applies only to whether we pay for overfill under our outlier policy. ESRD facilities remain free to take steps to reduce drug wastage and in doing so, reduce their costs in providing ESRD services—our policy only prevents an ESRD facility from accounting for something for which it incurred no cost in determining whether it met the high cost outlier policy.

We are finalizing our proposal to incorporate the ASP overfill policy into our outlier policy and for purposes of the composite rate portion of the blended payment during the transition. Thus, ESRD facilities may only report units and charges for drugs and biologicals actually purchased.

9. Revisions to Patient-Level Adjustment for Body Surface Area (BSA)

Under section 1881(b)(14)(D)(i) of the Act, the bundled ESRD PPS must include a payment adjustment based on case-mix that may take into account patient weight, body mass index (BMI), body surface area (BSA), and other appropriate factors. In the proposed rule (76 FR 40511 and 40512), we explained that we evaluated height and weight because the combination of these two characteristics allows us to analyze two measures of body size: BSA and BMI. We further explained that both body size measures are strong predictors of variation in payment for ESRD patients. As a result, in developing the ESRD PPS, we established a case-mix patient level adjustment for BSA that would be applied to each 0.1 m2 change in BSA compared to the national average.

In the proposed rule (76 FR 40511 and 40512), we proposed to make one change related to the use of the national BSA average value used in the calculation of the BSA adjustment applied to the composite rate portion of the blended payment during the transition. This change was necessary because we believe that the BSA national average used to compute payment under the composite rate portion of the blended rate and under the ESRD PPS should be both the most recent and consistent measurement available. We further explained that for CY 2011, the BSA adjustment we calculated for the composite rate portion of the blended payment used the BSA national average of 1.84, which reflected the average among Medicare dialysis patients in 2002. However, the BSA national average we used for computing the BSA under the ESRD PPS was 1.87, which reflected the national average among Medicare dialysis patients in 2007. We did not realize that we had used 2 different national averages in CY 2011, nor was it brought to our attention during the comment period. For CY 2012 and in subsequent years, we proposed to use one national average for computing the BSA under the composite rate portion of the blended payment during the transition and under the ESRD PPS.

In the CY 2004 PFS final rule (69 FR 66329), we explained that the BSA factor was defined as an exponent equal to the value of the patient's BSA minus the reference. For example, for a beneficiary with a BSA of 1.94, using the CY 2011 national average of 1.84 under the composite rate would yield a BSA adjustment factor of 1.0370. For the same patient, using the national average of 1.87 used for the CY 2011 ESRD PPS BSA computation would yield a BSA adjustment factor of 1.0258. A ratio or proportional difference of 1.0258 divided by 1.0370 equals .9892 difference the between the two BSA adjustment factors. This corresponds to a reduction of 1.08 percent ($1 - 0.9892 = 0.0108$) in the composite rate payment for adult patients by increasing the BSA reference value from 1.84 to 1.87.

In Table 3 of the proposed rule (76 FR 40512), we showed the impact of increasing the composite rate BSA reference value from 1.84 to 1.87 for each year from 2011 to 2014, on facility payments for ESRD facilities going through the transition. The impact on facility payments are greatest in 2011, where the blended payment during the transition period is weighted more

heavily towards the basic case-mix adjusted composite payment system, and declines through 2014 when there is no impact on facility payments under a fully implemented PPS.

Therefore, for CY 2012, we proposed to use the latest national average (that is, 1.87) as the reference point for the computation of the BSA adjustment for both the composite rate portion of the blended payment and for the ESRD PPS (76 FR 40512). We also proposed to review the BSAs on CY 2012 claims (and every 5 years thereafter) to determine if any adjustment to the national average would be required in the future. We sought comments on these proposals. The two comments we received and our responses are set forth below:

Comment: One organization that represents small dialysis organizations supported the proposals to use the 1.87 reference point for computing the BSA and to review the BSA calculation every five years. One independent ESRD facility opposed the change in the reference point stating that it will negatively impact facilities that opted to receive payment under the transition because it will reduce the composite rate payment. The commenter referenced the table in the proposed rule that displays the negative effect.

Response: We thank the national organization for its support of our proposals and appreciate the concerns expressed by the ESRD facility. We regret that we had not identified the discrepancy in the values used in the CY 2011 ESRD PFS and CY 2011 ESRD PPS final rules. However, as we indicated in the CY 2012 proposed rule, we believe the change is necessary because the BSA national average used to compute the composite rate portion of the blended payment and under the ESRD PPS should be both the most recent and consistent measurement available.

After considering the public comments and for the reasons noted above, in this final rule, for CY 2012, we are finalizing our proposal to use the BSA national average of 1.87, which is the latest national average, as the reference point for the computation of the BSA adjustment for both the composite rate portion of the ESRD PPS blended payment and for the ESRD PPS. We are also finalizing our proposal to review the BSA national average on the CY 2012 claims and every 5 years thereafter to determine if any adjustment to the national average will be required in the future.

10. Revisions to the Outlier Policy

Section 1881(b)(14)(D)(ii) of the Act requires that the ESRD PPS include a payment adjustment for high cost outliers due to unusual variations in the type or amount of medically necessary care, including variability in the amount of erythropoiesis stimulating agents (ESAs) necessary for anemia management. In the CY 2011 ESRD PPS final rule, we stated that for purposes of determining whether an ESRD facility would be eligible for an outlier payment, it would be necessary for the facility to identify the actual ESRD outlier services furnished to the patient by line item on the monthly claim (75 FR 49142).

Medicare regulation § 413.237(a)(1) provides that ESRD outlier services include: (1) ESRD-related drugs and biologicals that were or would have been, prior to January 1, 2011, separately billable under Medicare Part B; (2) ESRD-related laboratory tests that were or would have been, prior to January 1, 2011, separately billable under Medicare part B; (3) medical/surgical supplies, including syringes used to administer ESRD-related drugs, that were or would have been, prior to January 1, 2011, separately billable under Medicare Part B; and (4) renal dialysis service drugs that were or would have been, prior to January 1, 2011, covered under Medicare Part D, excluding ESRD-related oral-only drugs. Drugs, laboratory tests, and medical/surgical supplies that we would recognize as outlier services were specified in Attachment 3 of Change Request 7064, issued August 20, 2010 under Transmittal 2033. Transmittal 2033 was rescinded and replaced by Transmittal 2094, dated November 17, 2010. The replacement document involved the (1) Deletion of several drugs; (2) identified drugs that may be eligible for ESRD outlier payment; (3) provided a list of laboratory tests that comprise the AMCC tests; (4) deleted several laboratory tests; and (5) included the latest version of the ESRD PRICER layout file. Transmittal 2094 was subsequently rescinded and was replaced by Transmittal 2134 issued January 14, 2011. That transmittal was issued to correct the subject on the transmittal page and made no other changes.

Medicare regulations at § 413.237(a)(2) through (a)(6), and (b) specify the methodology used to calculate outlier payments. An ESRD facility is eligible for an outlier payment if its actual or imputed Medicare Allowable Payment (MAP) amount per treatment for ESRD outlier services exceeds a threshold. The MAP amount represents the average incurred amount per treatment for services that were or would have been considered separately billable services prior to January 1, 2011. The threshold is equal to the ESRD facility's predicted ESRD outlier services MAP amount per treatment (which is case-mix adjusted) plus the fixed dollar loss amount. In accordance with § 413.237(c) of the regulation, facilities are paid 80 percent of the per treatment amount by which the imputed MAP amount for outlier services (that is, the actual incurred amount) exceeds this threshold. ESRD facilities are eligible to receive outlier payments for treating both adult and pediatric dialysis patients.

In the CY 2011 ESRD PPS final rule, using 2007 data, we established the outlier percentage at 1.0 percent of total payments (75 FR 49142 through 49143). We also established the fixed dollar loss amounts that are added to the predicted outlier services MAP amounts. The outlier services MAP amounts and fixed dollar loss amounts are different for adult and pediatric patients due to differences in the utilization of separately billable services among adult and pediatric patients (75 FR 49140).

a. Revisions Related to Outlier ESRD Drugs and Biologicals

Attachment 3 of Change Request 7064 issued August 20, 2010 under Transmittal 2033, as modified by Transmittal 2094 issued November 17, 2010 and Transmittal 2134 issued January 14, 2011, specified the former separately billable Part B drugs that are recognized as ESRD-related eligible outlier services and, the former Part D drugs by National Drug Code (NDC) for the three vitamin D analogues (calcitriol, paracalcitol, and doxercalciferol) and levocarnitine that are recognized as eligible outlier service drugs.

In the proposed rule (76 FR 40513), we indicated that we had intended to update both the lists of former part B drugs and biologicals and former part D drugs that are outlier services (75 FR 49138). However, we concluded that any CMS prepared lists of drugs and biologicals recognized as outlier services may be difficult to keep up-to-date. We recognized that this is attributed to the lag in the receipt of claims data; changes in ESRD practice patterns; and inadvertent omissions and oversights. Because the regulation defines eligible outlier service drugs, we believe there is no need for CMS to issue a list of former separately payable part B ESRD outlier services drugs. Furthermore, because the list of drugs is

derived from paid ESRD claims, it would not be comprehensive, completely represent drugs and biologicals furnished to ESRD patients, accurate, or up-to-date. We noted that, consistent with current policy, all composite rate drugs, as defined in the Medicare Benefit Policy Manual, Pub. 100–02, chapter 11, section 30.4.1, would not be eligible for an outlier payment, as these drugs would not have been separately paid under Part B or Part D prior to January 1, 2011, and do not meet the definition of outlier services. Consequently, we proposed to eliminate the issuance of a list of former separately payable Part B drugs and biologicals that would be eligible for outlier payments. Accordingly, we solicited public comments on our proposal to eliminate the issuance of a specific list of eligible outlier service drugs which were or would have been separately billable under Medicare Part B prior to January 1, 2011.

The comments on our proposal and our responses are summarized below.

Comment: Two national associations supported the proposal to eliminate the drug and biological list. Both commenters supported the creation of a list through guidance. One commenter indicated that the list would maintain transparency, but recognized that this would create a rulemaking burden. The commenter further requested that CMS ensure that process remains transparent and subject to input from stakeholders.

Response: We thank the commenter's for their support of our proposal. As we indicated, any CMS prepared lists of drugs and biologicals recognized as outlier services may be difficult to keep up-to-date due to the factors described above.

Because we are concerned that a failure to include a drug or biological on the outlier services list will negatively impact ESRD facilities by limiting the drugs eligible for the outlier policy, in this final rule, we are finalizing the proposal to eliminate the issuance of a specific list of eligible outlier service drugs which were or would have been separately billable under Medicare part B prior to January 1, 2011. However, under separate guidance, we plan to continue to identify renal dialysis service drugs which were or would have been covered under Part D for outlier eligibility purposes in order to provide unit prices for calculating imputed outlier services.

With respect to the comment regarding transparency, we recognize the need to be transparent and have sought input from stakeholders. We believe that we have been transparent by the inclusion of proposed changes to outlier drugs and biologicals under the ESRD PPS in the proposed rule, (76 FR 40513 and 40514) and our request for comments.

Under current policy, antibiotics furnished in the home are considered to be composite rate drugs and therefore, not eligible for outlier payment. In the proposed rule (76 FR 40513), we discussed that Pub. 100–02, chapter 11, section 30.4.1 lists the drugs covered under the composite rate. The list includes a statement that antibiotics when used at home by a patient to treat an infection of the catheter site or peritonitis associated with peritoneal dialysis are considered composite rate drugs. Because composite rate drugs and their administration (both the staff time and the supplies) are covered under the composite rate, antibiotics furnished in the patient's home used for the reasons noted above may not be billed and paid separately. However, antibiotics furnished in an ESRD facility are considered separately payable in accordance the Medicare Claims Processing Manual, Pub. 100–04, chapter 8, section 60.2.1.1.

We also noted that Pub. 100–02, chapter 11, section 50.9 states that an antibiotic used at home by a patient to treat an infection of the catheter site or peritonitis associated with peritoneal dialysis is covered as home dialysis supplies included in the Method II (Direct Dealing) payment cap for home dialysis supplies administered by the Durable Medical Equipment (DME) Supplier. Prior to January 1, 2011, under Method II, durable medical equipment suppliers received direct payment from Medicare for furnishing dialysis services to home dialysis patients. Effective January 1, 2011, as indicated in § 413.210(b) of the regulations, CMS does not pay any entity or supplier other than ESRD facilities for covered items and services furnished to a Medicare beneficiary. Therefore, payment to DME suppliers for antibiotics under Method II can no longer be made. Additionally, under the ESRD PPS, the dialysis facility is responsible for furnishing all renal dialysis services, regardless of the site of service. Under the ESRD PPS, there is no payment distinction made as to the site where a renal dialysis service is provided (that is, in the home or in a facility).

Therefore, in the proposed rule, (76 FR 40513 and 40514), we indicated that we did not believe that it would be appropriate to have a distinction in which antibiotics administered in an ESRD facility, used to treat an infection of the catheter or other access site, or peritonitis associated with peritoneal dialysis, would be considered as separately billable under the composite rate portion of the blended payment and eligible for outlier payments under the ESRD PPS, while antibiotics used at home by home patients for the same purpose would be considered to be included in the composite rate and not eligible for outlier payments. We proposed to eliminate the inclusion of antibiotics when used in the home to treat an infection of the catheter site or peritonitis associated with peritoneal dialysis as part of the composite rate drugs, and allow them to be separately paid under the composite portion of the blended payment for ESRD facilities receiving payment during the transition. We also proposed that antibiotic drugs used at home to treat catheter site infections or peritonitis associated with peritoneal dialysis would be eligible as ESRD outlier services. Antibiotics furnished in facility would continue to be recognized as ESRD outlier services.

We solicited comments on our proposal. The comments and our responses are summarized below.

Comment: One national association and one dialysis organization agreed with the proposal that home antibiotics to treat catheter site infections or peritonitis associated with peritoneal dialysis would qualify as eligible for outlier payment.

Response: We thank the commenter for their support.

In this final rule, we are finalizing the proposal to recognize antibiotics furnished in the home to treat catheter site infections or peritonitis associated with peritoneal dialysis as eligible for outlier payment. We believe the inclusion of antibiotics used by home dialysis patients as outlier services will reduce confusion over drugs and biologicals that are eligible outlier services and eliminate the distinction in the eligibility of a drug for outlier eligibility based on where it is furnished. As new drugs emerge, we intend to update the HCPCS codes corresponding to new drugs and biologicals for billing purposes, and to determine whether any of those drugs would have been considered to be composite rate drugs. Drugs and biologicals which were or would have been considered composite rate drugs are not eligible ESRD outlier services under § 413.237.

In the proposed rule (76 FR 40514), we proposed two modifications to the computation of the separately billable MAP amounts used to calculate outlier payments for the reasons described below. We explained that subsequent to the publication of the CY 2011 ESRD PPS final rule, our clinical review of the

2007 ESRD claims used to develop the ESRD PPS revealed that dialysis facilities routinely used alteplase and other thrombolytic drugs for access management purposes. Under the ESRD Benefit Policy Manual, Pub. 100–02, chapter 11, section 30.4.1, drugs used as a substitute for any of the listed items, or are used to accomplish the same effect, are covered under the composite rate. Because heparin is a composite rate drug and could be used for access management, any drug or biological used for the same purpose may not be separately paid. Because outlier payments are restricted under § 413.237(a) to those items or services that were or would have been considered separately billable prior to January 1, 2011, we proposed to recalculate the average outlier services MAP amounts to exclude these composite rate drugs (that is, we proposed to exclude thrombolytics from the computation).

We also explained in the proposed rule that in developing the outlier service MAP amounts for 2011, we excluded testosterone and anabolic steroids. We subsequently learned from discussions with clinicians and ESRD facilities, that these drugs can be used for anemia management. Because drugs used for anemia management in ESRD patients were or would have been considered separately billable under Medicare part B, these drugs would be considered outlier services under § 413.237(a)(1). Consequently, we have recomputed the outlier service MAP amounts for CY 2012 to include these drugs. As shown in Table 2, when comparing the outlier service MAP amounts based on the current definition of ESRD outlier services to the revised ESRD outlier definition, the net effect of these two revisions (the exclusion of thrombolytic drugs and inclusion of anabolic steroids) results in an decrease to the outlier service MAP amounts by $4.00 for adult patients and a decrease of $0.50 for pediatric patients.

We solicited comment on the two modifications to the computation of the separately billable MAP amounts used to calculate outlier payments we proposed. The comments received and our responses are set forth below.

Comment: We received several comments opposing the proposal to exclude thrombolytic drugs used for access management from the outlier services MAP amounts and therefore, not eligible for outlier payments. One national organization believes that there should be a longer experience with the use of thrombolytics under a bundled system before excluding them from outlier payments. The commenter stated that when properly used, these agents may help avoid unnecessary (and expensive) access procedures and interventions. The commenter further believes that the outlier payment policy could adversely impact their proper use and lead to greater vascular access procedures outside of the dialysis unit and could be ''detrimental to patients' outcomes.''

Response: We do not understand the value that longer experience with the use of thrombolytics under a bundled system before excluding them from the outlier policy would provide. We believe that the determination the furnishing of a drug should be based upon the patient's needs and remain independent of the outlier policy. We believe that maintaining vascular access is a renal dialysis service and ESRD facilities would continue to be responsible for furnishing the service. We also expect that ESRD facilities would refer patients to another setting if medically necessary and we would not expect ESRD facilities to address any and all vascular access complications if doing so would be unsafe.

With regard to the comment about proper use of thrombolytics, the efficacy or merit of thrombolytics is not in question with their exclusion from the outlier policy. We believe that the ESRD PPS provides an opportunity for ESRD facilities to make decisions based on the medical need of patients and not on the basis of financial gain. That is, under current policy, a facility may choose to use a thrombolytic (alteplase) because those drugs are eligible under the outlier policy, rather than using an anticoagulant (heparin) which is not eligible. By no means are we implying that thrombolytics or any access management drug should not be used when clinically indicated. But rather, we are saying that payment policy is not intended to dictate, determine, or influence clinical practice or favor one course of treatment over another. It is intended to ensure that decisions are not made solely on the basis of financial gain but based on clinical judgment.

Finally, as we discussed above, the Medicare Benefit Policy Manual, Pub. 100–02, chapter 11, section 30.4.1, states that drugs used as a substitute for any of the listed items or are used to accomplish the same effect are covered under the composite rate. Because heparin is included in the composite rate and is used to ensure patency of an access site and proper flow during the dialysis treatment, as we discuss in greater detail below, we interpret this provision to mean that any drug used to ensure patency of an access site and proper flow during the dialysis treatment and, therefore, would be more properly considered a composite rate drug.

Comment: An independent ESRD facility noted that alteplase was separately billable under the composite rate and was not considered ''interchangeable with heparin''. The commenter further indicates that alteplase had been included in the CY 2011 MAP. Finally, the commenter indicated that the decision made by this facility to receive payment under the transition was made in part because alteplase was separately paid under the composite rate system and CMS included alteplase and other thrombolytics under the outlier policy.

Response: The commenter is correct that alteplase was separately billable under the composite payment system and was included in the CY 2011 MAP amounts for the outlier policy. Because we did not propose to alter that policy with regard to the composite rate portion of the blended payment and the policy was only discussed in the context of the outlier policy, we do not believe it would be appropriate to make the change at this time. Therefore, as indicated above, in CY 2012, thrombolytics furnished by an ESRD facility will continue to receive separate payment under the composite rate portion of the blended payment.

While we acknowledge that in the development of the ESRD PPS, alteplase was included in the computation of the MAP amounts and eligible for outlier payments, we proposed to rectify this situation in the proposed rule because we believe that making one access management drug eligible for outlier payment while making another ineligible should not exist. We also note that since heparin predated the use of thrombolytics in dialysis access patency and management and heparin was included in the composite rate, we believe that any drug or biological including other anticoagulants, thrombolytics or any other type of drug that may be used in the future for access patency and management would also be considered a composite rate drug.

Comment: One pharmaceutical company indicated that it did not promote the ''off-label'' use of alteplase in the dialysis setting. The commenter expressed concern that the proposed change for outlier payments for alteplase will provide a disincentive for appropriate vascular access practices and management, resulting in a negative effect on patients. The commenter stated that the manual cited in the proposed rule includes a list of specific drugs, heparin is listed but does not include alteplase or other thrombolytic. The

commenter further stated that the next section of the manual requires separate billing for thrombolytics used to declot central venous catheters. The commenter acknowledged that heparin and alteplase are used for access management, but the commenter maintained that does not mean that one substitutes for the other. One example provided by the commenter is that heparin has been used for 30 years as an anticoagulant to prevent the blood from clotting as it is being filtered through the dialyzer and states that the substitute for heparin flushing is saline, which may be contraindicated in the dialysis population due to potential blood pressure effects. The commenter further stated that alteplase is used as a salvage therapy when a catheter becomes dysfunctional due to presumed thrombosis. The commenter maintained that alteplase is the ''only thrombolytic currently marketed that can help lyse a clot and potentially restore blood flow to a poorly functioning catheter''. The commenter included Kidney Dialysis Outcomes Quality Initiative (KDOQI) guidelines that all catheters are ''locked'' with an anticoagulant such as heparin to prevent thrombosis. The commenter provided the physiological response to the heparin which they state could result in thrombus formation and further stated that the guidelines recommend thrombolytic therapy directed at salvaging the catheter before access replacement. The commenter cited the pharmacological and indication differences between the two drugs, as well as potential quality problems that they believe will occur with the proposed change Finally, the commenter distinguished between heparin and alteplase by indicating that patient care technicians (PCTs) administer intravenous heparin while alteplase is prescribed by a physician and cannot be administered by PCTs.

Response: We did not state in the proposed rule that alteplase was sometimes used off-label in the dialysis setting; however, we believe that the commenter may be referring to our statement that ESRD facilities routinely used thrombolytic drugs for access management purposes.

In the development of the ESRD PPS, we knew that alteplase and heparin were pharmacologically different (that is, one is a thrombolytic lysing clots and the other is an anticoagulant preventing clots, respectively). However, we believe that both drugs enable the catheter or graft to function either through clot prevention or clot degradation and provide effective dialysis vascular access. We are aware that heparins and thrombolytics have a different mode of action, with heparin preventing thrombosis and thrombolytics lysing a thrombus after it has formed. We are also aware that formation of a thrombus in or around the tip of central venous catheters used for dialysis is one reason for catheter dysfunction. Appropriate use of heparin by dialysis facilities can prevent thrombus formation, thus reducing the likelihood of catheter dysfunction. Heparin use in dialysis has long been part of the ESRD composite payment system, is relatively inexpensive, and is widely used as an effective technique for primary prevention of hemodialysis catheter dysfunction. Thrombolytics (including alteplase), can be used to lyse or dissolve thrombus, restoring catheter function in some cases. These agents are very costly and, according to FDA package insert information, can result in significant bleeding complications. From the perspective of achieving a clinical result, maintenance of hemodialysis catheter function, either inexpensive primary prevention or costly intervention produces interchangeable results. We believe that payment policy should encourage achievement of the desired results in the most cost-effective manner, particularly when the prevention approach reduces risk to Medicare beneficiaries. We believe that the significant expenditures for thrombolytics suggests that there are ESRD facilities that may not be adequately applying established preventive methods (that is, use of heparin) to maintain hemodialysis catheter access. Inclusion of thrombolytics in the definition of outlier services and potentially making a facility eligible for outlier payments supports the continuation of this practice.

As for the statement about negative outcomes, we believe maintaining vascular access is a renal dialysis service and therefore, is included in the ESRD PPS. ESRD facilities are responsible for furnishing the service. We expect that ESRD facilities would not refer patients to another healthcare setting for the purpose of maintaining vascular access. We expect patients to be referred to another setting if medically necessary. We are not suggesting that ESRD facilities are expected to address any and all vascular complications, if doing so would be unsafe for the patient. Finally, as we indicated, we plan to monitor whether ESRD facilities are continuing to maintain vascular access as they currently perform.

With regard to the comment on the disincentive to use alteplase properly, as we noted above, payment policy is not intended to dictate, determine, or influence clinical practice. We believe that the policy that any drug or biological used for access management would not be considered eligible under the outlier policy (that is, excluding thrombolytics from the outlier policy), would support decision-making based on medical need and not based upon financial incentives. We believe that continuing to recognize expensive thrombolytics as outlier services for purposes of computing outlier payments for ESRD facilities could create perverse financial incentives to underutilize clot prevention techniques and overutilize clot lysis techniques in the course of vascular access maintenance by ESRD facilities.

The commenter is correct that Medicare Benefit Policy Manual, Pub. 100–02, chapter 11, section 30.4.1, does not explicitly list alteplase or other thrombolytics as composite rate drugs; however, it does state that drugs used as a substitute for any of the listed composite items or are used to accomplish the same effect (that is, access patency) are covered under the composite rate. As we explained in previous responses, we believe that alteplase and other thrombolytic drugs are used for access management as is heparin, though we acknowledge that the physiological action is different. As we explained above, we based our decision to propose the elimination of thrombolytic drugs from outlier eligibility because both thrombolytics and anticoagulants are used to maintain the patency of the dialysis access site. We note that, at this point, we are not aware of another ESRD-related drug category which has some drugs covered under the composite while others in the category are separately billable.

For example, for the category of bone and mineral metabolism, there are various drugs that can be used. These drugs have the same outcome, but have different physiological actions to accomplish bone integrity; some are calcium or calcium analogues while others are phosphorus. The difference in the bone and mineral metabolism category is that all of the drugs were separately billable and therefore, eligible under the outlier policy. Another example is antihypertensives. There are many antihypertensive drugs which have the same clinical effect of lowering blood pressure, but how the effect is achieved differs. Beta blockers by blocking beta adrenergic receptors slow the heart rate and thereby reduce the force in which the heart muscle contracts leading to a decrease in blood pressure. Hydrochorothiazide increases the amount of water removed from the

blood, causing a decrease in blood pressure. Ace inhibitors prevent the conversion of ACE I and ACE II. ACE II causes the blood vessels to constrict. By preventing the conversion, the blood vessels dilate and lead to a decrease in blood pressure. Antihypertensives are in the composite rate.

The commenter is also correct that the Medicare Benefit Policy Manual, Pub. 100–02, chapter 11, section 30.4.2 does list thrombolytics for declotting central venous catheters as being separately paid. We cannot address why this payment distinction was made under the composite rate payment system. However, we do not believe that allowing some drugs in a drug category (that is, for access management) to be eligible under the outlier policy while other drugs in the category are not is sound payment policy. Because a drug was paid separately under the composite rate system does not mean that it has to be eligible under the outlier policy under the ESRD PPS. We are not saying that thrombolytics should or should not be used as their use is a medical determination. We are merely saying that as a result of classifying drugs and biologicals into categories (for example, access management), thrombolytics would no longer be eligible under the outlier policy beginning January 1, 2012.

As we discussed earlier and in the CY 2011 ESRD PPS final rule (76 FR 49050), under the ESRD PPS, we did not provide a specific ESRD-related drug list because we recognized that drugs and biologicals change over time. That is the reason that we categorized drugs and biologicals based on function, such as access management. In that regard, heparin (and other clot prevention drugs) and thrombolytics such as alteplase, despite their pharmacological differences, are all categorized as access management drugs.). Because there may be other drugs and biologicals that may be used for access management in the future that may also have different physiological differences, we also stated that any drug or biological furnished for the purpose of access management will be considered a renal dialysis service under the ESRD PPS. In other words, even if a new drug has a physiological action that differs from anticoagulants (as heparin) or thrombolytics (as alteplase), but is used to maintain access patency, we would not consider such drug to be eligible under the outlier policy.

We disagree with the commenter's argument that patient care techs (PCTs) can administer heparin as part of standing orders while alteplase is prescribed by a physician implies that they should not be considered in the same category. We believe that any medication or any protocol used for dialysis is prescribed by a medical practitioner and that differences in who may administer a drug is not an appropriate distinction that should impact CMS payment determinations.. We are monitoring access management and will continue to do so.

We have not been convinced by the commenters that we should not implement the policy to exclude thrombolytic drugs from the outlier policy. Therefore, in this final rule, we are finalizing our policy to exclude thrombolytic drugs from the outlier policy and have recomputed the outlier MAP amounts to reflect this policy change. However, because we did not propose to exclude separate payment of thrombolytic drugs under the composite rate portion of the blended payment, separate payment will be made for thrombolytic drugs under the composite rate portion of the blended payment in CY 2012.

Comment: One national organization opposed the inclusion of testosterone and anabolic steroids in the anemia management category citing that it is not recognized as the standard of care. The commenter indicated that the forthcoming Kidney Disease: Improving Global Outcomes (KDIGO) Clinical Practice Guidelines for Anemia and CKD makes a strong (level 1B) recommendation that testosterone and anabolic steroids not be used. The commenter further states that the use of these drugs is not the recognized standard of care and the KDIGO guidelines would discourage the financial incentives associated with their use.

Response: We appreciate the concerns expressed by the commenter. The determination to include drugs in or exclude drugs from a category is made based on the overall effect of the drug. Standards of care and appropriate use of any item or service is not within the scope of payment policy. As we have indicated in responses to comments above, we expect that ESRD facilities will make decisions based on patient need and appropriateness of the items and services they furnish. That means we would not expect that a drug would be furnished for financial purposes but rather that the drug is medically necessary for the patient. We expect that medical practitioners will make prescribing decisions based on appropriate medical decision making. Finally, we believe that the renal community will work towards achieving the best medical practice. Nonetheless, we determined that such drugs were included in the 2007 claims (though the dollar amount was small) and as a result, proposed to modify the outlier policy.

Therefore, in this final rule, we are finalizing a policy to include testosterone and anabolic steroids that are used for anemia management as eligible outlier services and have recomputed the outlier MAP amounts to reflect this policy change.

b. Exclusion of Automated Multi-Channel Chemistry (AMCC) Laboratory Tests From the Outlier Calculation

Medicare regulations at § 413.237 provide that ESRD-related laboratory tests that were or would have been considered separately billable under Medicare part B prior to January 1, 2011, are eligible outlier services. Those laboratory tests were specified in Attachment 3 of Change request 7064 issued under Transmittal 2033, as modified by Transmittals 2094 and 2134. In the CY 2011 ESRD PPS final rule (75 FR 49135 through 49138), we indicated that in order to compute the outlier payment for laboratory tests, the 50 percent rule is required. In addition, because the 50 percent rule is necessary to calculate the composite rate portion of the blended payment during the transition period, we retained the 50 percent rule to determine whether Automated Multi-Channel Chemistry (AMCC) panel tests would be considered composite rate or separately billable for the ESRD PPS portion of the blended payment (75 FR 49137). The AMCC panel tests and an explanation of the 50 percent rule are identified in Pub. 100–2, chapter 11, section 30.2.2. ESRD laboratory billing rules can be found in Pub. 100.04, chapter 16, section 40.6.

The 50 percent rule provides that if 50 percent or more of covered laboratory tests comprising a panel of AMCC tests are included under the composite rate payment, then all submitted tests are included within the composite rate payment and, therefore, none of the laboratory tests are considered separately billable. Conversely, if less than 50 percent of the covered panel tests are composite rate tests, then all AMCC tests submitted for the date of service for that beneficiary are considered separately billable. In addition, Pub. 100–2, chapter 8, section 60.1 provides that an AMCC test that is a composite rate test, but is furnished beyond the normal frequency covered under the composite rate, is separately billable based on medical necessity.

We explained in the CY 2012 ESRD PPS proposed rule (76 FR 40514 and 40515), that after publication of the CY 2011 ESRD PPS final rule, we received

numerous requests to eliminate the 50 percent rule due to the commenters' assertions that they were confused about its application. Unlike specific drugs which are classified as either composite rate or separately billable for purposes of eligibility under the outlier policy as discussed above, AMCC laboratory tests may be classified as either composite rate or separately billable depending upon the application of the 50 percent rule or the frequency at which the laboratory test is ordered. Therefore, the determination of ESRD-related laboratory tests as eligible outlier services depends upon the number of panel tests furnished or their subsequent classification based on the application of the 50 percent rule.

Because the AMCC laboratory tests included as eligible under the outlier policy are determined by the 50 percent rule, and in the interests of administrative simplification and minimizing confusion, we proposed to eliminate use of the 50 percent rule for the outlier policy and exclude the 23 AMCC laboratory tests from the definition of ESRD outlier services and from the computation of outlier payments. We proposed that the elimination of the 50 percent rule for the AMCC panel tests under the ESRD PPS outlier payment policy would result in the de facto treatment of those tests as composite rate tests. Accordingly, we proposed to revise § 413.237(a)(1)(ii) of the regulations to exclude these laboratory tests from the definition of ESRD outlier services. The 50 percent rule would continue to apply, however, to AMCC laboratory tests for classification as either composite rate or separately billable for the purpose of computing the composite rate portion of the blended rate for ESRD facilities that elected to receive payments under the transition, because the transition period under the ESRD PPS would be time limited, and would expire when the transition period ends. This would occur because all in 2014 ESRD payments would be based 100 percent on the ESRD PPS and there would no longer be a need to maintain the distinction between composite rate and separately billable laboratory services for purposes of applying the 50 percent rule. The comments we received and our responses are set forth below:

Comment: Two commenters expressed support of the elimination of the 50 percent rule under the outlier policy. One renal dialysis organization welcomed the elimination of the 50 percent rule. However, the commenter indicated that, of the 23 AMCC tests, twelve were part of the composite rate prior to January 1, 2011. The commenter believes that the other eleven tests should not be considered part of the composite rate as they are not routinely performed for evaluation of ESRD. The commenter further explained that it is rare to see all eleven tests ordered on one patient.

Response: We thank the commenters for their support of our proposal to eliminate the 50 percent rule under the outlier policy. As we discussed in the proposed rule (76 FR 40514 through 40515), all 23 laboratory tests were included on the outlier list for the purpose of the 50 percent rule only. Under our proposal to eliminate the 50 percent rule from the outlier policy, the twelve composite rate laboratory tests in the AMCC panel would no longer be considered eligible under the outlier policy. Of the remaining 11 laboratory tests in the AMCC panel, the majority would not be considered ESRD related. Therefore, these tests are not eligible under the outlier policy.

Because we did not propose to alter that policy with regard to the composite rate portion of the blended payment and the policy was only discussed in the context of the outlier policy, we do not believe it would be appropriate to make the change at this time. Therefore, in CY 2012, we are retaining the 50 percent rule and the 23 AMCC laboratory tests for the composite rate portion of the blended payment during the transition, because the transition period under the ESRD PPS would be time limited, and will expire when the transition period ends.

In the preamble of the proposed rule (76 FR 40515), we proposed to revise § 413.237(a)(1)(ii) of the regulations to exclude these laboratory tests from the definition of ESRD outlier services. However, in the proposed regulation text of the proposed rule (76 FR 40550), we proposed revisions to § 413.237 by adding paragraph (a)(1)(v) to exclude these laboratory tests from the definition of outlier services. In this final rule, we are finalizing our proposal, but are finalizing the revision of § 413.237 by adding paragraph (a)(1)(v) to indicate that as of January 1, 2012, the laboratory tests that comprise the AMCC panel are excluded from the definition of outlier services.

c. Impact of Final Changes to the Outlier Policy

In the proposed rule (76 FR 40515 and 40516), we showed the impact of the proposed changes in the outlier policy which were to: (1) Exclude vascular access management drugs and include anabolic steroids as eligible outlier service drugs; and (2) exclude the 23 AMCC laboratory tests from the ESRD outlier services definition. In this final rule, we are finalizing the revised ESRD outlier services definition and changes to the outlier policy. The outlier services MAP amounts and fixed dollar loss amounts included in the proposed rule were based on 2009 data. In this final rule, we are updating the outlier services MAP amounts and fixed dollar loss amounts based on 2010 data. The impact of this update is shown in Table 2, which compares the outlier services MAP amounts and fixed dollar loss amounts in the proposed rule with the updated estimates for this final rule. All estimates in Table 2 were inflation adjusted to reflect projected 2012 prices for outlier services.

BILLING CODE 4120–01–P

Table 2
Outlier policy: Impact of using updated data to define the outlier policy^

	Outlier policy in proposed rule (based on 2009 data price inflated to 2012)*		Outlier policy for CY2012 (based on 2010 data price inflated to 2012)*	
	Age < 18	Age >= 18	Age < 18	Age >= 18
Average outlier services MAP amount per treatment[1]	$46.27	$87.83	$46.26	$81.73
Adjustments Standardization for outlier services[2]	1.0136	0.9728	1.0024	0.9738
MIPPA reduction	0.98	0.98	0.98	0.98
Adjusted average outlier services MAP amount[3]	$45.96	$83.73	$45.44	$78.00
Fixed dollar loss amount that is added to the predicted MAP to determine the outlier threshold[4]	$82.58	$145.25	$71.64	$141.21
Patient months qualifying for outlier payment	5.0%	5.5%	5.7%	5.4%%

^ The revised ESRD outlier services definition and policy excludes vascular access management drugs and includes anabolic steroids. Vascular access management drugs billed separately include the following: alteplase, reteplase, heparin, lepiridun, and urokinase. Anabolic steroids billed separately include the following: testosterone and nandrolone. Payments for separately billable automated multi-channel chemistry (AMCC) tests were identified using modifier codes 'CE' and 'CF' (where 'CE' indicates composite rate tests beyond the frequency covered under the rate but separately billable based on medical necessity, and 'CF' indicates tests that are separately billable).
* The outlier services MAP amounts and fixed dollar loss amounts were inflation adjusted to reflect 2012 prices for outlier services.

[1]Excludes patients for whom not all data were available to calculate projected payments under an expanded bundle. The outlier services MAP amounts are based on 2010 data. The medically unbelievable edits of 400,000 units for EPO and 1,200 mcg for Aranesp that are in place under the ESA claims Monitoring policy were applied.
[2]Applied to the average outlier MAP per treatment. Standardization for outlier services is based on existing Case Mix Adjusters for adult and pediatric patient groups.
[3]This is the amount to which the separately billable (SB) payment multipliers are applied to calculate the predicted outlier services MAP for each patient.
[4]The fixed dollar loss amounts were calculated using 2010 data to yield total outlier payments that represent 1% of total projected payments for the ESRD PPS.

BILLING CODE 4120–01–C

Based on the use of updated data for 2010, the average outlier services MAP per treatment amounts have decreased from $87.83 to $81.73 for adult patients and slightly from $46.27 to $46.26 for pediatric patients. These updates largely reflect changes in the utilization of outlier services for adult and pediatric patients between 2009 and 2010. These changes result in a smaller outlier services MAP amount for adult patients (decrease from $83.73 to $78.00) and very little change in the outlier services MAP amount for pediatric patients.

Similarly, the fixed dollar loss amounts which are added to the predicted MAP amounts per treatment to determine the outlier thresholds are being updated from $145.25 to $141.21 for adult patients and from $82.58 to $71.64 for pediatric patients. We estimate that the percentage of facilities with patient months qualifying for outlier payments under the current policy will be slightly lower for adult patients (from 5.5 to 5.4 percent) and higher for pediatric patients (from 5.0 to 5.7 percent) based on our use of 2010 data.

The update based on 2010 data has a somewhat greater impact on the outlier policy for pediatric patients compared to adult patients. There is generally greater sensitivity in the pediatric results due to the relatively small number of pediatric Medicare dialysis patients overall (approximately 800 patients nationally). This is especially the case with the pediatric fixed dollar loss amounts, since the magnitude of the pediatric fixed dollar loss amounts is basically determined by a relatively small number of the highest cost pediatric patients. The somewhat lower pediatric fixed dollar loss amounts based on data from 2010 (as compared with 2009), reflect the tendency to have somewhat less extreme high cost cases for pediatric patients in the 2010 claims. The expected result based on this update is that a somewhat larger percentage of pediatric claims are expected to qualify for outlier payments

based on 2010 data, but the average outlier payment among the pediatric outlier cases will be somewhat lower.

D. Technical Corrections

1. Training Add-On

In the CY 2011 ESRD PPS final rule (75 FR 49062 through 49063), we explained the rationale for costs associated with self-dialysis training. On page 49063 of the CY 2011 ESRD PPS final rule, the correct training add-on amount of $33.44 is listed in our response in column. However, we inadvertently listed an incorrect training add-on amount of $33.38 in the third column of page 49063. The correct training add-on amount is $33.44. Therefore, we are correcting the training add-on amount to $33.44 in the third column on page 49063 of the CY 2011 ESRD PPS final rule, for costs associated with self-dialysis training on or after January 1, 2011. The geographic wage index is applied to the $33.44. As described in the CY 2011 ESRD PPS final rule (75 FR 49063), the training add-on amounts after application of the wage index would range from $20.03 to $45.84.

Although we did not propose any changes to the current training add-on (other than noting the technical correction), we received 12 comments from patients and a home training organization. The comments we received and our responses are set forth below:

Comment: Two commenters supported the technical correction to the training add-on amount. Some comments recommended changes to the training add-on which included updating the training add-on to keep pace with inflation by applying the update directly to the training add-on or by re-calculating the hourly nurses time using the methodology employed in the CY 2011 ESRD PPS final rule. One commenter stated that the training add-on is outside of the bundled base rate and therefore, is not captured in the annual market basket update. One home training organization stated that they were disappointed with home training reimbursement. The commenter also indicated that the allowable home training payments cannot be billed because of issues with the submission requirements for the ESRD Medical Evidence form for new patients. A home training organization, patients, families and a national association believe that training treatments should be paid at the prescribed frequency and not limited to three days per week, up to the allowable number of days. One commenter maintained that her clinic was losing money on training and therefore their time should be compensated appropriately. Another commenter believes that the home training add-on adjustment did not come close to capturing the costs of training. Several commenters maintained that training should be for more than one hour of nursing time. Several commenters believe that the training add-on adjustment is inadequate.

Response: As we indicated in the proposed rule (75 FR 40516), we were providing a technical correction to note the correct amount of $33.44 for training treatments furnished on or after January 1, 2011. We did not propose any change in the methodology or the training add-on adjustment. Thus, the suggestions and comments received are beyond the scope of this final rule. However, we will take these comments into account in future rulemaking. Also note, the training add-on adjustment is adjusted by geographic wage index to account for a nurse's salary for one-hour of home dialysis training. This adjustment applies to both hemodialysis and peritoneal dialysis home training and is paid in addition to the ESRD PPS payment. That is, ESRD facilities receive a per-treatment payment, that accounts for case-mix, geographic location, low-volume and outlier payments, regardless if the patient receives dialysis at home or in a facility, plus the training add-on. We also note that staff time is included in the per treatment payment amount and, the training add-on is in addition to that amount.

2. ESRD-Related Laboratory Test

In the proposed rule (76 FR 40516), we noted that we inadvertently omitted an ESRD-related laboratory test from Table F: ESRD-Related Laboratory Tests of the Appendix in the CY 2011 ESRD PPS final rule. We explained that the ''Assay of protein by other source,'' which is identified by the Current Procedural Terminology code 84157, was a composite rate service under the basic case-mix adjusted composite payment system and, consequently, is considered a renal dialysis service under the ESRD PPS effective January 1, 2011. Therefore, the ''Assay of protein by other source'' should be furnished by the ESRD facility, either directly or under arrangement by another entity, to the ESRD patient and paid for under the ESRD PPS payment.

We did not receive any comments. In this final rule, we are correcting Table F of CY 2011 ESRD PPS final rule by adding, ''Assay of protein by other source'' identified by the Current Procedural Terminology code 84157.

E. Clarifications to the CY 2011 ESRD PPS

1. ICD–9–CM Diagnosis Codes

In the proposed rule, we discussed the ICD–9–CM diagnosis codes that are eligible for the co-morbidity payment adjustments (76 FR 40516). We provided the list of ICD–9–CM codes that are recognized for purposes of the co-morbidity payment adjustments in Table E: ICD–9–CM Codes Recognized for a Co-morbidity Payment Adjustment of the Appendix of the CY 2011 ESRD PPS final rule (75 FR 49211). Although we discussed ICD–9–CM coding to be used to identify co-morbidity conditions on ESRD claims, we did not indicate that we would update the existing diagnostic categories and ICD–9–CM codes on an annual basis.

We clarified that the ICD–9–CM codes are subject to the annual ICD–9–CM coding changes that occur in the hospital inpatient PPS final rule and effective October 1st of every year (76 FR 40516). We explained that any changes that affect the categories of co-morbidities and the diagnoses within the co-morbidity categories that are eligible for the co-morbidity payment adjustments will be communicated to ESRD facilities through sub-regulatory guidance. In the proposed rule, we also explained that in response to comments we have received, we believed that it was important to reiterate the discussion of co-morbidities that was detailed in the CY 2011 ESRD PPS final rule (75 FR 49094 through 49107). Therefore, we explained that ESRD facilities should continue to provide documentation in the patient's medical/clinical record to support any diagnosis recognized for a payment adjustment, because this is a requirement to receive the co-morbidity payment adjustment. As we discussed in the proposed rule, we have been and will continue to monitor the prevalence of any co-morbidity diagnoses recognized for the co-morbidity payment adjustments under the ESRD PPS as compared to the prevalence of these categories over the past several years. Therefore, we would be able to identify any changes in the prevalence of any of the co-morbidity diagnoses recognized for purposes of the co-morbidity payment adjustment as compared to previous trends. We are monitoring the co-morbidities eligible for payment adjustment to determine if the co-morbidity adjustments need to be refined in future rulemaking. We did not receive any comments on this clarification.

2. Emergency Services to ESRD Beneficiaries

In the CY 2011 ESRD PPS final rule (75 FR 49056), we explained that inpatient services, emergency services, and outpatient services furnished in a hospital or in an ambulatory surgical center furnished to ESRD beneficiaries were not included in the ESRD PPS base rate, and none of these services are considered renal dialysis services for inclusion in the ESRD PPS payment bundle. These services are reimbursed under other Medicare payment systems. We also explained that certain outpatient procedures necessary to maintain vascular access (that is, those which cannot be addressed by the ESRD facilities using procedures that are considered part of routine vascular access care), are excluded from the definition of renal dialysis services and are not included in the ESRD PPS payment. However, we consider the furnishing of certain medications, such as those used to flush a vascular access site of an ESRD patient, to fall within the definition of renal dialysis services.

As we discussed in the section on consolidated billing rules and edits in the CY 2011 ESRD PPS final rule (75 FR 49168), the ESRD PPS payment is an all-inclusive payment for renal dialysis services and the ESRD facility is responsible for all of the ESRD-related services that a patient receives. Payment for renal dialysis services under the ESRD PPS, including those that were formerly paid separately under the basic case-mix adjusted composite payment system, is no longer made to entities other than the ESRD facility (such as laboratories and DME suppliers).

In the proposed rule (76 FR 40517), we noted that after the publication of the CY 2011 ESRD PPS final rule, we received requests that we further clarify whether certain renal dialysis services furnished in an emergency room or emergency department are considered renal dialysis services covered under the ESRD PPS. Accordingly, we further clarified that renal dialysis services defined at § 413.171 of the regulations include diagnostic laboratory tests. In developing the ESRD PPS base rate, we included payments for outpatient laboratory tests billed on ESRD facility claims, as well as laboratory tests ordered by monthly capitation payment (MCP) physicians and billed on carrier claims (75 FR 49055), because we believe that these diagnostic laboratory tests furnished by ESRD facilities and MCPs meet the definition of renal dialysis services. We did not include laboratory tests ordered for Medicare ESRD patients undergoing treatment in hospital emergency departments or emergency rooms, because these tests are usually administered as part of a patient's clinical assessment of the condition requiring emergency room admission, which we believe are not generally related to the treatment of ESRD. Therefore, laboratory tests that are performed for Medicare ESRD beneficiaries in an emergency situation in an emergency room or emergency department as part of the general work-up of the patient, were excluded from the ESRD PPS payment bundle, and would not be considered renal dialysis services under the ESRD PPS.

We acknowledged in the proposed rule that laboratory tests that could be used during dialysis and ordered for the treatment of ESRD also may be ordered for ESRD patients in an emergency department or emergency room for other reasons (that is, as part of the assessment of the patient to obtain a diagnosis of the underlying condition which required emergency intervention). Although such tests could also be used in dialysis treatment and in the treatment of ESRD, because laboratory tests ordered for ESRD patients treated in emergency departments or emergency rooms are needed to arrive at a diagnosis of the condition requiring emergency treatment, we did not consider the laboratory tests as renal dialysis services under the ESRD PPS. Accordingly, these laboratory tests were not used to develop the ESRD base rate. We indicated that we would not expect that the laboratory tests provided in that circumstance to be subject to consolidated billing edits, resulting in denial of payment. That is, we would not consider such tests to be renal dialysis services in those emergency situation because they were not ordered for the treatment of ESRD, but instead, furnished as part of the general work-up of the patient necessary for diagnosis.

We further explained in the proposed rule that the exclusion of laboratory tests ordered in hospital emergency rooms or emergency departments from the consolidated billing edits did not mean that renal dialysis facilities should attempt to circumvent the application of the bundled ESRD PPS rate by directing patients to emergency rooms or emergency departments for obtaining ESRD-related laboratory tests, or the provision of other renal dialysis services. Because ESRD facilities are financially responsible for all renal dialysis laboratory tests, referring ESRD patients to the emergency room or emergency department for ESRD-related laboratory tests would be inappropriate. We noted that it would also be inappropriate for ESRD facilities to refer its patients to the emergency room or emergency department for maintenance of access sites (including treatment for access infections) which they had treated prior to the ESRD PPS for the purpose of diverting costs of providing renal dialysis services to their patients, or the administration of drugs that are considered renal dialysis services under the ESRD PPS. We also stated that we are monitoring the provision of renal dialysis services to ESRD patients in emergency rooms or emergency departments.

We did not solicit comments on emergency services to ESRD beneficiaries; however, we received four comments from national organizations. A summary of the comments we received and our responses to comments are set forth below.

Comment: Several commenters representing hospital organizations endorsed CMS' policy not to apply the consolidated billing rules to items and services furnished to ESRD patients in hospital emergency rooms or emergency departments for reasons other than the treatment of ESRD. One commenter supported CMS's recognition that the ESRD PPS consolidated billing rules do not apply to patients in the emergency department. One commenter supported the exclusion of services provided in an emergency room from the definition of renal dialysis services under the ESRD PPS. One commenter appreciated the clarification that'''legitimate'' non-ESRD laboratory tests in emergency rooms, hospitals, and ambulatory care centers are not part of the ESRD PPS. Another commenter agreed that hospital emergency department claims are excluded from the ESRD consolidated billing edits. The commenter suggested modeling specific guidance from the skilled nursing facility (SNF) consolidated billing guidance. The commenter believed that that medication administration should not be included in the ESRD PPS consolidated billing stating that the administration of medications other than EPO or Aranesp would be directly related to the emergency condition. The commenter stated that the application of the AY modifier is a huge operational burden for hospitals and often they are unaware that patients have ESRD.

Response: We thank the commenters who supported our clarification of consolidated billing under the ESRD PPS. However, some commenters have misunderstood our clarification. In the proposed rule (76 FR 40517), we explained that we understood that laboratory tests that could be used for dialysis could also be ordered for ESRD

patients in an emergency room or emergency department for reasons other than the treatment of ESRD in order to arrive at a diagnosis. We stated that we recognize that laboratory tests ordered for ESRD patients in emergency room or emergency department that are needed to arrive at a diagnosis would not be considered renal dialysis services under the ESRD PPS and, therefore, would not be subject to consolidated billing. We further explained that the exclusion of laboratory tests that are ordered in an emergency room or emergency department and excluded from consolidated billing edits does not mean that renal dialysis facilities should attempt to circumvent the ESRD PPS bundled payment rate by directing patients to the emergency room or emergency department for ESRD-related laboratory tests.

We have not included drugs or any other renal dialysis item or service in the consolidated billing rule exemptions when furnished in an emergency room or emergency department. In other words, the only services that we have excluded from the consolidated billing edits are laboratory tests that are performed in an emergency room or emergency department to determine a diagnosis. We are not discussing any other outpatient setting other than an emergency room or emergency department. We will consider the inclusion of renal dialysis drugs (that is, drugs used for ESRD-related conditions) furnished in the emergency room or emergency department exemption in future rulemaking.

With regards to the suggestion that we follow the SNF consolidated billing guidelines, we will be issuing guidance on the consolidated billing exemption of laboratory tests ordered in an emergency room or emergency department for the purpose of establishing a diagnosis. Finally, with regard to the comment on the burden of using an AY modifier for non-ESRD-related items and services, we believe it is important that we assure that duplicate payments are not being made for items and services that have been included in the ESRD PPS bundled payment. At the current time, the use of the AY modifier is the only means that can be used in order to clearly identify items and services that are not ESRD-related.

F. Miscellaneous Comments

Comment: One commenter expressed disappointment that CMS did not remind ESRD facilities of the November 1, 2011 deadline to elect to be excluded from the transition.

Response: We believe that the decision to receive a blended payment under the transition or to receive payment under the ESRD PPS was a very important business decision for ESRD facilities and that a reminder was not necessary.

Comment: One national association urged CMS to consider the concerns of facilities in the transition and make adjustments to the proposed rule when it may impact their financial viability and ability to provide quality patient care.

Response: We always assess the degree to which our proposed policies negatively impact categories of ESRD facilities such as rural, independent, pediatric, and transitioning ESRD facilities and are committed to developing payment policies that are fair and lead to increased payment accuracy under the ESRD PPS.

Comment: One independent ESRD facility did not believe that ESRD facilities should be held to the one-time election if changes are made annually. The commenter proposed that the one-time election be made on an annual basis or for those facilities that will be ''disproportionately negatively impacted'' by the proposed changes. The commenter further stated that the ability to rescind decisions made in 2010 should be made available.

Response: Section 1881(b)(14)(E)(ii) of the Act prohibits us from allowing facilities to submit annual elections or to rescind elections. Therefore, we are unable to allow changes to the election under any circumstance. With regard to annual changes to the ESRD PPS, we did not state that CMS would not make any changes to the composite rate portion of the blended payment or to the ESRD PPS. We believe there are changes finalized in this rule (such as eliminating a site of service distinction with regard to separate payment for antibiotics used for access infection and, eliminating the 50 percent rule under the outlier policy) that will result in positive effects to transitioning facilities.

Comment: One patient organization stated that bundling has already negatively impacted patients. The commenter further states that providers have in large part changed prescribed medications to the detriment of patients. The commenter cited changing practices of providing analog vitamin D and iron as examples.

Response: We are concerned about the comments made by this organization. We expect that ESRD facilities through their interdisciplinary teams and through the patient's nephrologist will ensure that patients receive the care that they require. We are monitoring many aspects of the ESRD PPS, including outcomes. We encourage patients to contact their ESRD Network if they are concerned about the care that they are receiving from their ESRD facilities.

Comment: Several commenters requested that the rate-setting and impact files at the provider level be provided to allow for transparency. The commenters indicated that they did not have the data to evaluate the proposed rule and offer suggestions to improve the bundled system. One commenter cited the need for the rate-setting file to allow for evaluating the proposed changes to the low-volume adjuster. The commenter further stated that their findings differed from CMS and expressed concern that CMS may have overestimated the low-volume adjuster in the standardization calculation leading to funds being taken out of the payment system inappropriately. One dialysis organization expressed their concern that small providers may not have the resources to identify outliers and place them on claims. The commenter urged CMS to show data that outlier payments were helping small providers. The commenter further stated that if small providers were not receiving outlier payments, then it may be best for funds allocated for outliers be made part of the base rate. One commenter stated that they remain concerned that some proposed policies continue to result in a loss of funds from the ESRD program that exceeds the Congressionally-mandated two percent for CY 2011.

Response: We do not agree with the assertions that CMS provided inadequate data to evaluate and comment on the proposals described in the proposed rule. We believe that the discussions and explanations in the proposed rule are sufficiently detailed to provide an adequate explanation as to how values were computed. In addition, we posted a provider-level impact file on the ESRD Payment Web site which was used to create the proposed impact analysis. We acknowledge that we may not have provided sufficient notification that the files were available and, therefore, in the future, we plan to provide a listserv notification to inform stakeholders when these files are available on the ESRD Payment Web site. As we did for CY 2011, we will post the provider-level file that will allow further analysis of the impact of the final outlier and wage index changes for CY 2012 on individual providers.

We have not made the rate setting file available because the release of patient identifiable data is not necessary to accomplish the purpose of analyzing our proposals. Applicable Federal privacy laws and regulations, including

the Privacy Act and HIPAA Privacy Rule only permit us to disclose personal identifiable information when it is necessary to administer the program, or for health care operations and payment.

We believe that some of the concerns raised by the commenters are related to the assumptions we made in computing the final base rate for CY 2011 where we standardized the base rate to account for the projected payments for the ESRD PPS adjustments. These concerns are beyond the scope of this final rule.

With regard to the commenters' claims that we had overstated the low-volume adjustment in the standardization calculation leading to funds being inappropriately taken out of the payment system, we explained the low volume methodology in great detail in the CY 2011 ESRD PPS proposed rule (74 FR 49969 through 49978) and in the CY 2011 ESRD PPS final rule (75 FR 49117 through 49125). We did not propose to change or modify the low-volume adjuster methodology for CY 2012. We note that we are monitoring the extent to which the low-volume and other ESRD PPS adjustments are consistent with the assumptions we made in developing the ESRD PPS. We will address this issue in future rulemaking.

We do not understand the comment that suggested that the proposed policies continue to result in a loss of funds from the ESRD program that exceeds the Congressionally-mandated two percent, because the two-percent reduction only applied to CY 2011.

Comment: Some commenters provided comments on issues that were not addressed in the proposed rule. These are summarized as follows. Some commenters suggested that the extra costs associated with patient non-compliance should be addressed. Some commenters advocated for inclusion of their products in the ESRD bundled payment. Other commenters believed that there should be a new technology adjustor and provided suggestions such as including new pharmaceutical agents into the base rate; providing for incremental payments for innovations that improve clinical outcomes, but do not reduce costs to dialysis facilities immediately; and a non-budget-neutral pass-through for new technology. One commenter suggested that we include over-the-counter nutritional support in the PPS as of January 1, 2012. Several commenters maintained that oral drugs for long term residents with ESRD should be dispensed by the Long Term Care pharmacy. Several commenters declared that CMS provide a statement indicating that future updates to items and services in the bundle will be made through rulemaking rather than guidance and, requested that CMS specify how future changes to the system will be handled. One commenter supported a race/ethnicity adjuster and provided their rationale on its inclusion. Another commenter urged CMS to examine time on machine, nutritional services, social work services and nursing services. One commenter requested that CMS explore broader ESRD bundles, such as integrated care models. Several commenters expressed difficulty of documenting co-morbidities and suggested that CMS provide the adjusters to the providers. Finally, some commenters expressed concerns about the ESRD cost report and with the anticipated funding of oral-only drugs.

Response: Because these comments were not in response to any proposals or discussions in the proposed rule, they are beyond the scope of this final rule. However, we refer the commenters to the CY 2011 ESRD PPS final rule where we believe that we addressed many of these issues (75 FR 49030). We also note that we will review all of the comments and may address them in future rulemaking.

Comment: One individual commenter supported the proposed rule. One national association supported the case-mix adjusted PPS. Another national association expressed their pleasure with the way in which CMS has implemented the first year of the ESRD PPS and the agency's willingness to work with the ESRD community.

Response: We thank the commenters for their support and willingness to work with CMS in implementing the ESRD PPS.

II. End-Stage Renal Disease Quality Incentive Program for Payment Years (PYs) 2013 and 2014

A. Background for the End-Stage Renal Disease Quality Incentive Program for PY 2013 and PY 2014

For over 30 years, monitoring the quality of care provided to end-stage renal disease (ESRD) patients and provider/facility accountability have been important components of the Medicare ESRD payment system. The ESRD Quality Incentive Program (QIP), required by section 1881(h) of the Social Security Act (the Act), is the next step in the evolution of the ESRD quality program that began more than three decades ago. The first year for which the ESRD QIP payment reduction will be implemented is PY 2012. The PY 2012 ESRD QIP was finalized in two regulations: one that finalized the three performance measures (75 FR 49030, 49182 (August 12, 2010) (hereinafter referred to as the ''CY 2011 ESRD PPS final rule'')); and one that finalized other aspects of the 2012 ESRD QIP such as the scoring methodology and payment reduction scale (76 FR 628 through 646) (hereinafter referred to as the ''2012 ESRD QIP final rule''). Section 1881(h) of the Act, as added by section 153(c) of MIPPA, generally requires that the Secretary establish an ESRD QIP by (i) Selecting measures; (ii) establishing the performance standards that apply to the individual measures; (iii) specifying a performance period with respect to a year; (iv) developing a methodology for assessing the total performance of each provider/facility based on the performance standards with respect to the measures for a performance period; and (v) applying an appropriate payment reduction to providers and facilities that do not meet or exceed the established Total Performance Score.

As we have stated, the first year for which the ESRD QIP payment reduction will be implemented is PY 2012, and we selected one measure for the PY 2012 ESRD QIP of dialysis adequacy and two measures of anemia management. The following are the three measures (finalized in the CY 2011 ESRD PPS final rule) for the PY 2012 ESRD QIP:

- Percentage of Medicare patients with an average hemoglobin less than 10.0 g/dL (Hemoglobin Less Than 10 g/dL measure).
- Percentage of Medicare patients with an average hemoglobin greater than 12.0 g/dL (Hemoglobin Greater Than 12 g/dL measure).
- Percentage of Medicare patients with an average urea reduction ratio (URR) equal to or greater than 65 percent (URR Hemodialysis Adequacy measure).

A full description of the methodologies used for the calculation of the measures can be reviewed at: *http://www.dialysisreports.org/pdf/esrd/public/Guide_to_the_PY_2012_ESRD_QIP_PSR.pdf* (see the ''Inclusion Criteria'' and ''Calculation Process'' sections of the document).

Other aspects of the 2012 ESRD QIP finalized in the PY 2012 ESRD QIP final rule include the establishment of performance standards for these measures (including applying the special rule under section 1881(h)(4)(E) of the Act) and establishing a scoring methodology for calculating individual Total Performance Scores ranging from 0–30 points based on the three finalized measures. As part of our methodology for calculating the provider/facility Total Performance Score, we weighted the Hemoglobin Less Than 10 g/dL

Measure at 50 percent of the score, while the Hemoglobin Greater Than 12 g/dl measure and the URR Hemodialysis Adequacy measure were each weighted at 25 percent of the score. We also finalized a policy under which providers/facilities that did not meet or exceed a Total Performance Score of 26 points would receive a payment reduction ranging from 0.5 percent to 2.0 percent.

B. Summary of the Proposed Provisions and Responses to Comments on the End-Stage Renal Disease (ESRD) Quality Incentive Program (QIP) for PY 2013 and PY 2014

On July 8, 2011, a proposed rule entitled ''Medicare Program; Changes to the End-Stage Renal Disease Prospective Payment System for CY 2012, End-Stage Renal Disease Quality Incentive Program for PY 2013 and PY 2014; Ambulance Fee Schedule; and Durable Medical Equipment'' (76 FR 40498) (the ''proposed rule'') appeared in the **Federal Register**. In the proposed rule, we expanded upon the PY 2012 ESRD QIP framework by proposing to adopt new ESRD QIP requirements for PYs 2013 and 2014.

We received approximately 88 public comments on the proposed rule that were related to the ESRD QIP. Interested parties that submitted comments included dialysis facilities, national organizations representing dialysis facilities, nephrologists, nurses, nutritionists, home health agencies, dialysis corporations, clinical laboratories, pharmaceutical manufacturers, hospitals and their representatives, individual dialysis patients, advocacy groups, and the Medicare Payment Advisory Commission (MedPAC). In this section of the final rule, we provide a summary of each proposed requirement for the PY 2013 and PY 2014 ESRD QIP, a summary of the public comments received on those requirements, our responses to these comments, and the final policies that will apply to the PY 2013 and the PY 2014 ESRD QIP.

1. PY 2013 ESRD QIP Requirements

In the proposed rule, we outlined the proposed requirements for the two proposed measures for the PY 2013 ESRD QIP. We proposed that ESRD providers and facilities that do not meet these requirements would receive a reduction, based on their Total Performance Score, to the payments otherwise made under section 1881(b)(14) with respect to PY 2013 services, in accordance with section 1881(h)(1)(A) of the Act. We proposed to calculate these payment reductions by assigning each provider/facility a Total Performance Score, ranging from 0–30 points, in accordance with its individual performance on the two proposed measures. We proposed that a provider/facility that does not achieve a Total Performance Score of 30 points would receive a payment reduction in PY 2013 ranging from 1.0 percent to 2.0 percent, depending upon how far below this minimum Total Performance Score its performance falls. Our specific proposals, responses to comments, and finalized policies based on comments, are discussed below.

a. Performance Measures for the PY 2013 ESRD QIP

Section 1881(h)(2)(A) of the Act requires that the measures specified for the ESRD QIP include measures on anemia management that reflect the labeling approved by the FDA for such management; measures on dialysis adequacy; to the extent feasible, a measure or measures on patient satisfaction; and such other measures that the Secretary specifies, including (to the extent feasible) measures on iron management, bone mineral metabolism, and vascular access, including maximizing the placement of arterial venous fistula. In selecting measures for the PY 2013 ESRD QIP, we examined whether it would be feasible to propose to adopt any new measures for the program. In light of our proposal to select CY 2011 as the performance period (discussed more fully below), we determined that it is not feasible to adopt any of the new measures mentioned above until the PY 2014 ESRD QIP. We also carefully reexamined the three measures that we adopted for the PY 2012 ESRD QIP, and for the reasons discussed below, proposed to continue including only two of them, (i) The Hemoglobin Greater Than 12 g/dL measure and (ii) the URR Hemodialysis Adequacy measure, in the PY 2013 ESRD QIP measure set.

We also proposed to retire the Hemoglobin Less Than 10 g/dL measure beginning with the PY 2013 ESRD QIP. As we explained in more detail in the proposed rule (76 FR 40519), we have recently reassessed the evidence for the use of erythropoiesis stimulating agents (ESAs) in patients with kidney disease through a National Coverage Analysis (CAG–00413N) and, while we did not seek to limit the coverage of these agents at this time, we could not identify a specific hemoglobin lower bound level that has been proven safe for all patients treated with ESAs. In addition we believe that retiring the Hemoglobin Less Than 10 g/dL measure is reflective of the new labeling approved by the FDA for the use of ESAs (*http://www.fda.gov/Drugs/DrugSafety/ucm259639.htm*). We discussed with the FDA our proposal to retire the Hemoglobin Greater Than 10 g/dL measure starting in PY 2013. Because this measure encourages providers/facilities to keep hemoglobin above 10 g/dL, the FDA agreed that retiring this measure is consistent with the new labeling for ESAs approved by the FDA.

We proposed to maintain the Hemoglobin Greater Than 12g/dL measure as a measure of anemia management. As we explained in more detail in the proposed rule (76 FR 40519), the studies continue to show that targeting hemoglobin levels above 12 g/dL through the use of ESAs can contribute to adverse patient outcomes.[1] This measure, consistent with the requirement under section 1881(h)(2)(A)(i) of the Act, also continues to reflect the labeling approved by the FDA for anemia management.

We also proposed to retain the URR Hemodialysis Adequacy measure, which assesses the percentage of Medicare patients with an average URR equal to or greater than 65 percent. Section 1881(h)(2)(A)(i) of the Act states that the measures specified under the ESRD QIP for a payment year shall include measures on dialysis adequacy. We noted that, for the reasons stated in the CY 2011 ESRD PPS final rule (75 FR 49182), we believe that the URR Hemodialysis Adequacy measure is an appropriate and accurate measure of hemodialysis adequacy.

The comments we received on these proposals and our responses are set forth below. The comments on and the responses to the Hemoglobin Greater Than 12 g/dL measure also apply to the proposal to include this measure in the PY 2014 ESRD QIP.

Comment: Many commenters urged CMS to retire the URR Hemodialysis Adequacy measure for PY 2013 in favor of a Kt/V measure because Kt/V is widely accepted, is used extensively by the renal community as a measure of dialysis adequacy, and is the basis for a measure endorsed by the National Quality Forum (NQF). One commenter specifically noted that there are situations in which patients may have a Kt/V within an acceptable range, but not a URR equal to or greater than 65 percent. One commenter suggested that, if CMS does retire the URR dialysis adequacy measure for the PY 2013

[1] KDOQI Clinical Practice Guideline and Clinical Practice Recommendations for Anemia in Chronic Kidney Disease: 2007 Update of Hemoglobin Target, *American Journal of Kidney Diseases,* 50(3): Pages 471–530 (September 2007).

ESRD QIP, the agency should consider allowing facilities to report either URR or Kt/V.

Response: We thank the commenters for their input on this issue. We agree that a Kt/V dialysis adequacy measure would more accurately measure how much urea is removed during dialysis because the calculation takes into account the amount of urea removed with excess fluid. We asked providers/facilities to begin submitting Kt/V data on July 1, 2010, and plan to incorporate measure(s) based on Kt/V as soon as we can to ensure the validity and consistency of these data. In the interim, for the reasons stated in the CY 2011 ESRD PPS final rule (75 FR 49182), we believe that the URR Hemodialysis Adequacy measure is, overall, an appropriate and accurate measure of hemodialysis adequacy.

Comment: Many commenters voiced concern over CMS' proposal to retire the Hemoglobin Less Than 10 g/dL measure. One commenter specifically stated that CMS should consider the effects of retiring this measure on pediatric patients. Commenters noted that without a lower bound for hemoglobin in the ESRD QIP, the bundled payment system financially incentivizes providers/facilities to provide less ESAs, driving hemoglobin down. Commenters argued that decreased hemoglobin will lead to a rise in transfusions, hospitalization, morbidity, and mortality, endanger vascular access due to the need for additional venipuncture, and decrease quality of life, appetite of patients, and consistency of care, shifting care to hospitals and outpatient infusion centers. Further, one commenter argued that dropping the hemoglobin floor will increase the burden of ESRD patients because, as a result of the negative consequences, it will require more appointments and travel to receive transfusions; another commenter stated that retiring the measure will have a ''chilling effect'' on the ability to pursue innovation in the treatment of patients with chronic kidney disease (CKD). Commenters also noted that a rise in transfusions could result in worse transplant outcomes and a higher likelihood of infection. They also argued that quality of life issues may cause individuals to be less active and eat less nutritious foods, possibly resulting in patients who are less healthy and need more care. Some commenters noted that many of these consequences would be disproportionately suffered by the African-American community and encouraged CMS to collect and analyze data on health disparities.

Response: We thank commenters for their input. As we stated in the proposed rule (76 FR 40519), we have recently reassessed the evidence for the use of ESAs in patients with kidney disease through a National Coverage Analysis (CAG–00413N), and we could not identify a specific hemoglobin lower bound level that has been proven safe for all patients treated with ESAs. We are also not aware of, nor did the comments note, any studies that identify a specific hemoglobin level which should be maintained to increase quality of life or minimize transfusions or hospitalizations. However, if any new evidence or studies emerge, we will take such evidence into consideration in adopting future measures for the ESRD QIP. We have discussed our proposal to retire the Hemoglobin Less Than 10 g/dL measure with the FDA and they concur that retiring the measure is consistent with the new labeling for ESAs. Factors that impact anemia management, including optimal iron stores, dialysis adequacy, avoidance of infections, reduction of inflammation, and other factors should be addressed by the health care team to improve patient health. We urge patients and providers to work together to achieve optimal hemoglobin levels for each individual patient. We will continue to monitor and evaluate practice patterns and outcomes for all segments of the Medicare ESRD population as we develop and refine our measurement of the quality of anemia management. Additionally, we note that pediatric patients are excluded from the anemia management measures we have thus far adopted and are adopting in this final rule for the ESRD QIP, so the retirement of this measure does not directly affect the pediatric population.

Comment: As an alternative to retiring the measure, some commenters argued that CMS should reduce the lower bound from 10 g/dL to 9 g/dL or 8 g/dL or decrease the financial penalty. Commenters also suggested that the measure not be limited to those on ESAs because there are other means of maintaining hemoglobin levels. Other commenters suggested that the root cause of health issues related to high hemoglobin is the overuse of ESAs, and, therefore, CMS should create an anemia management measure monitoring ESA usage or other outcomes such as transfusion avoidance rather than hemoglobin levels. One commenter recommended that CMS set a range for hemoglobin of 10–11 g/dL, and, if a patient's hemoglobin is higher than 11 g/dL, CMS should require the ESA dosage to be decreased and not discontinued. One commenter proposed that, in the event the Hemoglobin Less Than 10 g/dL measure remains in the ESRD QIP, the weighting for this measure be decreased until an accurate baseline is determined reflecting current medical evidence and drug labeling. One commenter suggested that this weighting decrease to zero. Commenters also asked CMS to continue to monitor hemoglobin levels, perhaps through a reporting measure or as a condition for coverage, and publicly report low hemoglobin levels even if the measure is retired from the ESRD QIP.

Response: As we noted above, we did not find scientific evidence to identify an appropriate and safe quality standard for a minimal achieved hemoglobin level. Therefore, in the absence of this evidence, we do not believe it is appropriate to simply decrease the lower bound. Additionally, continuing to employ the measure in the program, but decreasing its weight to zero may signal to beneficiaries that this measure is valid, although less important, and that it is, therefore based in scientific evidence. As noted above, we are actively monitoring trends in anemia management as well as patient outcomes, and we strongly encourage patients and providers to work together to develop anemia management strategies appropriate for individual patient circumstances. We note that the Hemoglobin Less Than 10 g/dL measure results are currently reported on Dialysis Facility Compare, and that we are exploring the options and feasibility of continuing to publicly report anemia management trends.

We agree with commenters that we should consider anemia management measures that apply to patients not on ESAs, and, under 42 CFR 494.180(h), we asked providers/facilities to begin providing data for these patients on January 1, 2012. In addition, we are considering ways to incorporate achieved hemoglobin levels, ESA usage, and other important factors in our anemia measurement strategy for future years of the ESRD QIP; we welcome community input and would like to encourage measure development in this area.

Comment: Some commenters agreed with our proposal to retire the Hemoglobin Less Than 10 g/dL measure. Commenters noted that such a proposal reflects the new labeling approved by the FDA for the use of ESAs, is consistent with the lack of scientific evidence for a lower bound, and will allow providers more latitude, providing room for more patient-centered care. Several commenters also suggested that, while CMS should retire

the measure, the agency should also conduct additional clinical studies to establish optimal dose strategies, targets, and the long term safety of various ESA therapies, and reinstate a lower bound as soon as possible.

Response: We thank commenters for their support. As we noted above, we will continue to monitor practice patterns in the area of anemia management and develop and evaluate additional measures for future years of the ESRD QIP. We will also continue to work with our Federal partners and external stakeholders to advance knowledge in this area.

Comment: One commenter suggested that the agency include text in the ESRD QIP certificates to be posted in December 2011 to acknowledge the changing guidance in anemia management so patients and caregivers are aware that the data are dated and not necessarily relevant in today's environment. Another commenter stated that CMS should develop Performance Score Report (PSR) mechanisms to adjust for unusual patient demographics and dialysis facility census.

Response: The PY 2012 ESRD QIP certificates will clearly state that ''the information communicated * * * is based on 2010 data.'' Our regulations do not preclude providers/facilities from providing patients with more explanatory detail, and we encourage providers/facilities to engage patients in discussions of this information.

As we have stated, we continue to monitor the effects of the ESRD QIP on all segments of the Medicare ESRD population, and we will continue to evaluate our scoring and public reporting methodology for any necessary modifications.

Comment: Some comments suggested that the Hemoglobin Greater Than 12 g/dL measure should be retired from the PY 2013 and PY 2014 ESRD QIP measure set because some patients may benefit from a higher hemoglobin level and there is a lack of scientific evidence for an upper hemoglobin bound. Commenters argued that, generally, higher hemoglobin leads to better quality of life and patients and doctors should be able to weigh risks and benefits, leading to a more patient-centered definition of quality. These commenters noted that CMS should only be regulating those providers/facilities that are clear outliers. Some commenters requested that, should CMS retain the measure, the bound be raised to Greater Than 12.5 or Greater Than 13 g/dL. Another commenter stated that, given recent clinical practice changes already addressing the concern for high hemoglobin and high ESA doses, it may be reasonable for CMS to decrease the weighting for the Hemoglobin Greater Than 12 g/dL measure.

Response: Studies continue to show that targeting hemoglobin levels above 12 g/dL through the use of ESAs can contribute to adverse patient outcomes including an increased risk of myocardial infarction, stroke, venous thromboembolism, thrombosis of vascular access, and overall mortality, and, in patients with a history of cancer, tumor progression or recurrence. Given the significance of these outcomes, we do not believe it is appropriate either to retire the measure or reduce the weight of the measure. In addition, as explained further below, this measure is consistent with new labeling for ESAs approved by the FDA that directs providers to reduce or interrupt the dose of ESAs if the hemoglobin level approaches or exceeds 11 g/dL.

Comment: Some commenters argued that the only anemia management measure should be Hemoglobin Greater Than 11 g/dL, replicating the FDA guidelines. Commenters suggested that such a measure is consistent with current scientific evidence, provides the best level of care for patients, and lowers Medicare costs.

Response: New labeling approved by the FDA for the use of ESAs addresses targeted hemoglobin levels while we measure achieved hemoglobin levels. The achieved hemoglobin level is a function of the target but also reflects patient factors such as the underlying causes of anemia which determine how sensitive the patient is to ESAs and whether the target is actually achieved. These patient factors can vary unpredictably over time even within an individual patient which means that patients will sometime exceed (or fall short of) the hemoglobin level target despite clinician diligence. The FDA label recognizes this hemoglobin variability and states that, if the hemoglobin approaches or exceeds 11 g/dL, ESA dosing should be reduced or interrupted, but the label does not state that hemoglobin levels should never exceed this value. We believe that the current anemia measure allows for some deviations of the achieved hemoglobin while highlighting that higher hemoglobin targets can result in adverse patient outcomes.

Comment: Some commenters supported the Hemoglobin Greater Than 12 g/dL measure.

Response: We thank commenters for their support.

Comment: One commenter requested clarification on the meaning of ''on ESA,'' and another commenter requested that CMS explicitly state that the Hemoglobin Greater Than 12 g/dL measure applies only to those patients on ESAs. Specifically, one commenter inquired whether it is applied based on one bill indicating ESA administration after 90 days of dialysis and the submission of four bills for dialysis within a 12 month period for adult patients. In addition, the commenter asked how patients with untreated Hemoglobin Greater Than 12 g/dL will be identified and excluded from the measure calculation.

Response: We assume that the commenters are referring to data extracted from claims. As outlined in the measure specification, ''on ESA'' means that a patient is receiving ESAs during the month covered by a claim, as identified by the presence of an ESA dose and hemoglobin on the claim. This measure applies only to months for which a patient has received an ESA agent. Patients are attributed to a facility only after they have four months of eligible claims from that facility. To be eligible for the Hemoglobin Greater Than 12 g/dL measure, among other criteria, (i) The beginning date of the claim must have been at least 90 days since the date of first ESRD service for the patient and (ii) the claim must include a line item reporting the administration of an ESA in that month. These inclusion criteria are unchanged from the PY 2012 ESRD QIP. The measures specifications are available at *http://www.dialysisreports.org/ESRDMeasures.aspx.*

Comment: Some commenters believe that the Hemoglobin Less Than 10 g/dL measure should be retired from the PY 2012 measure set because it would be unfair to penalize dialysis providers/facilities for their nephrologists' interpretation of the medical literature. One commenter argued that CMS knew of published studies in 2006 and 2009 which signaled that no lower bound could be identified and noted that these studies changed behavior in the industry. One commenter also stated its belief that if CMS does not retire the measure for the PY 2012 ESRD QIP, the public may erroneously conclude that the provider's/facility's PY 2012 ESRD QIP total performance score reflects CY 2012 data, as opposed to the data utilized for the performance period. Commenters also argued that the legislative language requiring the Secretary to reflect the FDA labeling applies to the labeling in the payment year rather than the performance year.

Response: Based on the available evidence in 2006 regarding the treatment of anemia in the ESRD population, we developed a consensus-based measure which was endorsed by

the NQF in 2008 (NQF #0370). This measure formed the basis for the Hemoglobin Less Than 10 g/dl measure which was adopted for the ESRD QIP (76 FR 628). This measure remained consistent with clinical practice guidelines and the labeling approved by the FDA for the use of ESAs in effect until June 2011. In June 2011, new labeling for ESAs was approved by the FDA. We will retire the Hemoglobin Less Than 10 mg/dL measure beginning in PY 2013 in accordance with this new labeling.

Although measures are adopted for a specific payment year, we evaluate performance on those measures during a performance period that precedes the payment year so that we can collect and evaluate the data for these measures and allow providers/facilities adequate time to review their scores before payment reductions occur. Therefore, to the extent that the anemia management measures under section 1881(h)(2)(A)(i) reflect the labeling approved by the FDA for such management, we believe that those measures must reflect the labeling and guidance in effect and the care provided during the performance period which, with respect to the PY 2012 program, was CY 2010.

Finally, as we noted above, the PY 2012 ESRD QIP certificates state that ''the information communicated * * * is based on 2010 data.''

For the reasons discussed above, for the PY 2013 ESRD QIP, we finalize use of the following two measures previously adopted for the PY 2012 ESRD QIP:

- Hemoglobin Greater Than 12g/dL measure
- URR Hemodialysis Adequacy measure

b. Performance Period and Case Minimum for the PY 2013 ESRD QIP

Section 1881(h)(4)(D) of the Act requires the Secretary to establish a performance period with respect to a year, and for that performance period to occur prior to the beginning of such year. In the proposed rule, we discussed in detail the factors that we considered in determining what performance period to select for the PY 2013 ESRD QIP (76 FR 40519). We also noted that, in light of the new ESRD PPS, we believe that it is important to assess the quality of care being furnished to ESRD patients and that basing this assessment on a year of data will provide an accurate and fair determination of whether a provider/facility has met or exceeded the proposed performance standards with respect to the proposed measures. Therefore, we proposed to select all of CY 2011 as the performance period for the PY 2013 ESRD QIP.

Consistent with what we finalized for the PY 2012 ESRD QIP, we also proposed to require that providers/facilities have at least 11 cases that meet the reporting criteria for a measure in order to be scored on the measure.

The comments we received on these proposals and our responses are set forth below.

Comment: Several commenters expressed concern that both the PY 2013 and PY 2014 programs will use data more than a year old and penalize facilities that have since improved; commenters encouraged the use of methodologies that recognize changes in performance over time and use the most recently available data as comparison data. Another commenter recommended that CMS establish CY 2012 as the performance year for PY 2013 because it would allow dialysis facilities and providers to gauge their performance using clinically relevant, timelier, and prospective data.

Response: For both PY 2013 and PY 2014, we have determined that data derived from claims is the most appropriate source on which to score providers/facilities. Claims data allows us to implement a variety of measures which can be used to evaluate the greatest number of facilities. In order to assure completeness of this claims data, there is a lag between when the data is generated and when we are able to use it in the ESRD QIP. This time period is lengthened because we believe it is important to allow providers/facilities a period of time to review their scores before the payment period. We are considering how we might be able to shorten this timeline in the future, such as by collecting data through CROWNWeb or by some other method, such as the NHSN or electronic health records, and we will continue to take the commenters concerns into account as we do so.

Comment: Several commenters argued that, under section 1881(h)(4)(C) of the Act, the ESRD QIP performance periods must be prospective, but nearly all of the PY 2013 performance period will have ended by the time the performance standards are finalized. Commenters also argued that finalizing performance standards when the performance period is nearly complete impermissibly creates a retroactive rule. Comments also noted that a retrospective performance period does not allow a provider/facility to change its practices to meet standards, thereby increasing quality of care. Other commenters, however, voiced support for the proposed PY 2013 performance period.

Response: We acknowledge that section 1881(h)(4)(C) of the Act requires the Secretary to establish performance standards under subparagraph (A) prior to the beginning of the performance period for the year involved. However, we are establishing the performance standard that will affect ESRD payments in PY 2013 in accordance with section 1881(h)(4)(E), which does not impose the limitation suggested by the commenters. We believe that setting a CY 2011 performance period for the initial ESRD QIP will ensure that the performance scores are based on a robust set of data, and will allow us sufficient time to analyze that data, determine whether provider/facilities met the performance standards, provide providers/facilities with an opportunity to preview their performance scores and submit related inquiries, and implement the applicable payment reductions for PY 2013. We also note that, beginning with the PY 2014 program, we will set performance standards under section 1881(h)(4)(A) of the Act.

Comment: Commenters voiced concerns about CMS' approach to including low-volume facilities in the program because one patient could significantly affect a score for reasons unrelated to quality of care, such as patient comorbidities, and decrease the ability of a provider/facility to score well on a measure. This scoring could, in turn, affect patient volume if consumers judge facilities based on their scores. Commenters suggested different minimum case thresholds such as 20 cases or 25 cases or that providers with fewer cases be scored differently; some commenters also noted that their studies showed that the sample size rather than overall performance is driving the results for facilities and requested that CMS raise the case minimum to 20. Another commenter urged CMS to research the reliability of a measure to set the minimum number of cases, publish minimum case reliability data, and use this data to set a minimum number of cases for all value-based purchasing programs. One commenter urged CMS to re-consider its scoring methodology to analyze for statistical significance. Another commenter stated its belief that the ESRD QIP methodology does not appropriately account for low patient census, unusual treatment setting, or patient case-mix, and recommended that CMS develop a mechanism to adjust for circumstances in which facilities with an unusual care setting, atypical case-mix, or small patient census may be at high risk of incurring

penalties for failure to meet performance standards.

Response: We appreciate the commenters' concerns regarding the potential impact of patient case mix on smaller providers/facilities. The goal of the ESRD QIP is to accurately assess the quality of care provided by a provider/facility. However, we recognize that a quality measure score could be impacted by one or more factors unrelated to the care furnished by the provider/facility, and that the potential of such factors to greatly skew the calculation decreases as the number of cases included in the measure increases. Similarly, a provider/facility with a small number of patients could find that one patient's outcome determined its score on a quality measure. Thus we proposed that a provider/facility would need to have a minimum of eleven cases that meet the eligibility criteria for a measure in order to be scored on that measure. This eleven case minimum allows as many providers/facilities as possible to participate in the program. This minimum case number is also consistent with the reporting of these measures on Dialysis Facility Compare. We will continue to closely monitor beneficiary access to care, including evaluating the rate of facility closures. We will also continue to assess the impact of the program on facilities of all sizes, and we will change the methodology if we believe it is necessary to ensure that the program adequately measures quality. Additionally, we continue to monitor and evaluate the reliability of all of our value-based purchasing programs; we note, however, that each of these programs has its own set of requirements which must be considered during any assessment of reliability.

Comment: One commenter expressed concern that new facilities without a complete data set available for the measures will be unfairly penalized.

Response: Like all ESRD QIP providers/facilities, new facilities will only be included in the program if they have the requisite amount of data. Any provider/facility must have adequate data to calculate performance rates on both PY 2013 measures to be included in the PY 2013 ESRD QIP. For each of these measures, there must be at least eleven cases each with four claims, regardless of whether the facility is new or established.

Additionally, under the special rule in section 1881(h)(4)(E), we will be setting the initial performance standard as the lesser of the provider's/facility's performance during 2007 or the 2009 national performance rates. If a provider/facility was not in existence in 2007, we will assign a score of zero for purposes of assessing which of the two standards applies to the provider/facility. The provider/facility's performance in 2011 will then be compared against that initial performance standard.

For the reasons discussed above, we are finalizing all of CY 2011 as the performance period for the PY 2013 ESRD QIP.

c. Performance Standards for the PY 2013 ESRD QIP

In the proposed rule, we discussed in detail what performance standards we planned to select for the PY 2013 ESRD QIP. We noted that comparing provider/facility performance over time based on data from successive years would be beneficial as this method would allow the public to most accurately gauge provider/facility improvement. As we discussed above, we also noted that due to operational issues, it is not feasible for us to establish performance standards prior to the beginning of the proposed performance period, as is required if the performance standards are established under section 1881(h)(4)(A). Therefore, we proposed to continue using the performance standard under section 1881(h)(4)(E) of the Act for the PY 2013 ESRD QIP. Under this proposed standard, providers/facilities would be evaluated based on the lesser of (i) the performance of the provider/facility in 2007, which is the year selected by the Secretary under the second section of section 1881(b)(14)(A)(ii), or (ii) a performance standard based on the national performance rates for the measures in a period determined by the Secretary. With respect to the second prong, we proposed selecting CY 2009 because that is the most recent year-long period for which data would be publicly available prior to the beginning of the proposed performance period. At the time we published the proposed rule, the 2009 national performance rates for the Hemoglobin Greater Than 12 g/dL measure and the URR Hemodialysis Adequacy measure were:

- For the Hemoglobin Greater Than 12g/dL measure: 16 percent.
- For the URR Hemodialysis Adequacy measure: 96 percent.

The comments we received on the proposed selection of this performance standard and our responses are set forth below.

Comment: One commenter recommended rounding the average hemoglobin to one decimal place because this method is the industry standard and more decimal places exaggerates the precision of the laboratory tests. One commenter also stated that CMS should allow rounding to the tenth to address ''between instrument variability within a single laboratory.''

Response: For Dialysis Facility Compare (DFC) and Dialysis Facility Reports (DFR), we have traditionally not rounded the average patient hemoglobin values or the values resulting from the hematocrit to hemoglobin conversion. The final rule for the first year of the ESRD QIP stated that we would calculate the hemoglobin measure rates as they have been calculated for purposes of DFC and DFR in order to maintain consistency (76 FR 629). In light of this comment, however, we have concluded that beginning with the PY 2013 program, it is reasonable to round the patient average hemoglobin value to one decimal place to better reflect the precision of the original laboratory data prior to determining performance on the measure. We will also round the hematocrit to hemoglobin conversion to one decimal place. Using this new rounding convention, the 2009 national performance rate for the Hemoglobin Greater Than 12 g/dL measure using this new rounding convention rate is 14 percent.

Comment: One commenter suggested that CMS use a baseline period of 2009 for the Hemoglobin Greater Than 12 g/dL measure because data from 2009 is the most currently available data. This commenter also argued that, because of the change in FDA approved labeling and guidance from the baseline period to the performance period, this measure will cause confusion and not accurately measure quality and improvement.

Response: We proposed to use CY 2009 as the source of data for the national comparative performance standard for scoring the PY 2013 ESRD QIP measures. Although we recognize that the FDA-approved label for ESAs changed in CY 2011, we note that this change did not directly impact this measure. The Hemoglobin Greater Than 12 g/dL measure reflects both the prior and new labels for ESAs.

Comment: One commenter requested that CMS employ the PY 2014 achievement and improvement scoring methodology for PY 2013. One commenter voiced support for the change in methodology to equally weight the measures in PY 2013. One commenter stated that performance standards for PY 2013 should be less stringent to decrease the incentive to game the system.

Response: As explained above, we are using the special rule for PY 2013. Under this standard, providers/facilities would be evaluated based on the lesser

of (1) The performance of the provider/facility in 2007, which is the year selected by the Secretary under the second section of section 1881(b)(14)(A)(ii), or (2) a performance standard based on the national performance rates for the measures in a period determined by the Secretary (for PY 2013, this is CY 2009). We do not believe that the performance standards are too stringent; a provider/facility is scored on the lesser of its own performance or the national performance rate. We will be monitoring providers/facilities to assess any incentives to game the system.

After considering the comments, and for the reasons stated above, we are finalizing following performance standards. For the PY 2013 ESRD QIP, providers/facilities will be evaluated based on the lesser of (i) Their individual performance on the measures in 2007 or (ii) the national performance rates for the measures in 2009. We also finalize that we will round the values obtained when we convert hematocrit values to hemoglobin values and the average patient hemoglobin values used in the Hemoglobin Greater Than 12 g/dL measure to one decimal place.

Based on our new rounding methodology and the most recent 2009 data, the 2009 national performance rates vary slightly from those in the proposed rule. The national performance rate in 2009 for the Hemoglobin Greater Than 12 g/dL measure is 14 percent, and the national performance rate in 2009 for the URR Hemodialysis Adequacy measure is 97 percent.

d. Methodology for Calculating the Total Performance Score and Payment Reduction for the PY 2013 ESRD QIP

Section 1881(h)(3)(A)(i) of the Act requires the Secretary to develop a methodology for assessing the total performance of each provider and facility based on performance standards with respect to the measures selected for a performance period. Section 1881(h)(3)(A)(iii) of the Act states that the scoring methodology must include a process to weight the performance scores with respect to individual measures to reflect priorities for quality improvement, such as weighting scores to ensure that providers/facilities have strong incentives to meet or exceed anemia management and dialysis adequacy performance standards, as determined appropriate by the Secretary.

For the PY 2012 ESRD QIP, we finalized a scoring methodology under which we calculated the performance of each provider and facility by assigning 0–10 points for each measure. The full rationale for this scoring methodology is presented in detail in the PY 2012 ESRD QIP final rule (76 FR 629 through 634).

For the PY 2013 ESRD QIP, we proposed to adopt the same methodology for scoring provider/facility performance on each of the measures. We noted that, we believe that it is important to provide a clear-cut method for calculating scores initially while providers and facilities are becoming familiar with the program. We proposed to calculate the performance of each provider/facility on each measure by assigning points based on how well it performed on the measure in CY 2011 relative to the proposed performance standard (discussed above). If a provider or facility meets the performance standard for a measure, then it would receive 10 points for that measure. If a provider/facility does not meet the performance standard for a measure, we would award points for each measure based on a 0 to 10 point scale and would subtract 2 points for every 1 percentage point the provider or facility's performance falls below the performance standard during CY 2011, the performance period for PY 2013.

For the PY 2013 ESRD QIP, we proposed to weight the Total Performance Score for each provider/facility such that 50 percent would reflect the Hemoglobin Greater Than 12g/dL measure and 50 percent would reflect the URR Hemodialysis Adequacy measure. To be consistent with the scoring methodology that we finalized for the PY 2012 ESRD QIP, we proposed to award up to 30 points to a provider/facility based on its performance on the proposed measures. However, because we only proposed to adopt two measures for the PY 2013 ESRD QIP measure set, we proposed to calculate a provider's/facility's Total Performance Score by multiplying each measure score (0–10 points) by 1.5, adding both measure scores together and rounding this number to the nearest integer (with 0.50 rounded-up), resulting in a 0–30 point range.

Section 1881(h)(3)(A)(ii) of the Act requires the Secretary to ensure that the application of the scoring methodology results in an appropriate distribution of reductions in payments among providers and facilities achieving different levels of Total Performance Scores, with providers and facilities achieving the lowest Total Performance Scores receiving the largest reductions.

For the PY 2012 ESRD QIP, we implemented a sliding scale of payment reductions, setting the minimum Total Performance Score that providers/facilities will need to achieve in order to avoid a payment reduction at 26 points (76 FR 634). Providers/facilities that score between 21–25 points will receive a 0.5 percent payment reduction; between 16–20 points, a 1.0 percent payment reduction; between 11–15 points, a 1.5 percent payment reduction; and for a score between 0–10 points, providers/facilities will receive the full 2.0 percent payment reduction (76 FR 634).

To ensure that providers/facilities are properly incentivized to provide quality care, we proposed to implement a more rigorous sliding scale of payment reductions for the PY 2013 ESRD QIP and raise the minimum Total Performance Score that providers/facilities would need to achieve in order to avoid a payment reduction from 26 to 30 points. We noted that providers/facilities that score between 26–29 points would receive a 1.0 percent payment reduction; between 21–25 points, a 1.5 percent payment reduction; and between 0–20 points, providers/facilities would receive the full 2.0 percent payment reduction (see Table 3 below). We believe that applying a payment reduction of 2.0 percent to providers/facilities whose performance falls significantly below the performance standards, coupled with applying two intermediate payment reduction levels to providers/facilities based on lesser degrees of performance deficiencies, will provide proper incentives for all providers/facilities to improve the quality of their care.

Table 3. Proposed PY 2013 Payment Reduction Scale

Total Performance Score	2013 Percent of Payment Reduction
30 Points	0.0 Percent
26-29	1.0 Percent
21-25	1.5 Percent
0-20	2.0 Percent

The comments we received on this proposed scoring, weighting, and payment methodologies and our responses are set forth below.

Comment: Several commenters expressed concern that the PY 2013 scoring methodology and resulting payment reductions are too aggressive and would overly penalize facilities, draining them of monetary resources and morphing the ESRD QIP into a cost-cutting program. Several commenters suggested either doubling the penalty or requiring more points to avoid a penalty, but not both, stating that it is unreasonable of CMS to expect facilities to improve so rapidly from PY 2012 to PY 2013. Commenters also argued that CMS should reassess its PY 2013 scoring because nearly all of the performance period will have passed before the rule is finalized, not allowing providers/facilities enough time to make the necessary adjustments, and a facility that does not meet the performance standard for one measure may be significantly and unduly penalized because the program only evaluates two measures. Other commenters noted that many other quality programs have a broader sliding scale which gives more incentive for improvement and suggested that the PY 2012 payment scale of 0.5–2.0 percent also be used for PY 2013. This broader range was also suggested because it may take patients a period of time to stabilize or larger penalties might result from outliers, and the penalty structure should be more forgiving of these patients. Other commenters also stated that, because of the change in scoring from PY 2012, patients will be unable to compare facilities' scores and note progress.

Response: We believe that providers/facilities should always be striving to improve the quality of care they provide to patients. Therefore, we believe it is appropriate, in the second year of the program, to set a higher standard to further encourage improvement. Because both of the measures that we adopted for the PY 2013 ESRD QIP were included in the PY 2012 ESRD QIP measure set, we believe that it is reasonable to expect providers/facilities to have implemented practices to improve their performance on these measures. Additionally, because we are using the special rule, providers/facilities will be evaluated based on the lesser of two standards, which should help alleviate the concerns expressed by the commenters.

We designed the scoring based on a scale similar to what we are using for the PY 2012 ESRD QIP to make it easier for Medicare beneficiaries to compare providers'/facilities' performance in PY 2012 and PY 2013. Although we are using one less measure and weighting the measures differently in PY 2013, we believe that Medicare beneficiaries will still be able to compare both the overall quality of provider/facility performance (for example, whether the performance improved as a whole from PY 2012 to PY 2013), and the degree to which provider/facility performance on each of the two PY 2013 measures may have changed (because the certificates will display individual measure scores).

Comment: Some commenters voiced their support for the PY 2013 scoring methodology, including the more rigorous scale and the equal weighting of the PY 2013 measures.

Response: We thank the commenters for their support. For the reasons stated above, we are finalizing the proposed scoring, weighting, and payment methodology for the PY 2013 ESRD QIP.

2. Proposed PY 2014 ESRD QIP

a. Proposed Performance Measures for the PY 2014 ESRD QIP

For the PY 2014 ESRD QIP, we proposed to continue using the Hemoglobin Greater Than 12g/dL measure, adopt seven new measures (Kt/V Dialysis Adequacy, Vascular Access Type (VAT), Vascular Access Infections (VAI), Standard Hospitalization Ration (SHR)-Admissions, National Healthcare and Safety Network (NHSN) Dialysis Event reporting, Patient Experience of Care (ICH CAHPS) reporting, and Mineral Metabolism reporting) and to retire the URR Hemodialysis Adequacy measure. We also proposed to adopt measures under section 1881(h)(2)(A)(iii) of the Act. In specifying such measures, we recognize that section 1881(h)(2)(B)(i) of the Act requires that they must have been endorsed by the entity with a contract under section 1890(a) of the Act (that entity is currently the NQF) unless the exception in clause (ii) applies. That provision provides that in the case of a specified area or medical topic determined appropriate by the Secretary for which a feasible and practicable measure has not been endorsed by the entity with a contract under section 1890(a) of the Act, the Secretary may specify a measure that is not so endorsed as long as due consideration is given to measures that have been endorsed or adopted by consensus organizations identified by the Secretary.

i. Anemia Management Measure

Section 1881(h)(2)(A)(i) of the Act requires that the measures specified for the ESRD QIP include measures on anemia management that reflect the labeling approved by the FDA for such management. For the PY 2014 ESRD QIP, we proposed to retain the Hemoglobin Greater Than 12g/dL measure that we adopted for the PY 2012 ESRD QIP and are finalizing in this final rule for the PY 2013 ESRD QIP. We made this proposal for the same reasons that supported our proposal to retain this measure for the PY 2013 ESRD QIP measure set.

The comments we received on this proposed measure are discussed above in the section discussing the PY 2013 ESRD QIP. For the reasons stated above, we finalize the Hemoglobin Greater Than 12 g/dL measure for the PY 2014 ESRD QIP. The specifications for this measure can be found at *http://www.dialysisreports.org/pdf/esrd/public-measures/AnemiaManagement-HGB12-2013-2014-FR.pdf.*

ii. Dialysis Adequacy Measure

Section 1881(h)(2)(A)(i) of the Act requires that the ESRD QIP include measures on dialysis adequacy. For the PY 2014 ESRD QIP, we proposed to retire the URR Hemodialysis Adequacy measure we adopted for the PY 2012

ESRD QIP and are finalizing in this final rule to retain for the PY 2013 ESRD QIP. In its place, we proposed to adopt a measure of dialysis adequacy based on Kt/V (K = dialyzer clearance, t = dialysis time, and V = volume of distribution) for the PY 2014 ESRD QIP. Kt/V has been advocated by the renal community as a more widely accepted measure of dialysis adequacy. Specifically, Kt/V more accurately measures how much urea is removed during dialysis, primarily because the Kt/V calculation also takes into account the amount of urea removed with excess fluid. Further, the proposed measure assesses Kt/V levels in both hemodialysis (HD) patients (in-center and home (HHD)) and peritoneal dialysis (PD) patients, and is based on two Kt/V measures of dialysis adequacy that have been endorsed by the NQF (#0249 [2] and #0318 [3]). Specifically, the proposed measure assesses the percent of Medicare dialysis patients (PD, HD and HHD) meeting the modality specific Kt/V threshold. For hemodialysis patients (HHD and in-center patients), we proposed to measure the percentage of adult (≥ 18 years old) Medicare patients dialyzing thrice weekly whose average delivered dose of hemodialysis (calculated from the last measurements of the month using the Urea Kinetic Modeling (UKM) or Daugirdas II formula) was a Kt/V of at least 1.2 during the proposed performance period. For PD patients, we proposed to measure the percentage of adult (≥ 18 years old) Medicare patients whose average delivered PD dose was a weekly Kt/V urea of at least 1.7 (dialytic + residual) during the proposed performance period. The specifications for the proposed measures exclude pediatric patients. The NQF has since endorsed a separate pediatric hemodialysis adequacy measure (#1423), and we are considering how to best incorporate this measure into future years of the QIP.

The comments we received on the proposed Kt/V measure and our responses are set forth below.

Comment: Several commenters expressed concern that providers/facilities use different methodologies to calculate Kt/V and asked CMS to indicate which methodology should be used. Several commenters noted that this disparity in formulas and specifications may lead to disparate baseline standards and requested that CMS standardize requirements for Kt/V values for performance standards instead and/or wait until PY 2015 to implement the measure. Some commenters asked CMS to acknowledge that Daugirdas II or UKM formulas should be used for those patients receiving thrice weekly hemodialysis care. One commenter urged CMS to rigorously validate comparison calculation methods to assure that if different equations are used, they provide comparable results for Kt/V. Another commenter suggested that it would be extremely difficult, if not impossible, for the agency to correct the lack of standardization in the base year and asked instead that CMS take this into account in weighting this measure.

Response: Beginning January 1, 2012, we have asked providers and facilities to report Kt/V values on claims using the Daugirdas II or UKM formulas, which are also the formulas specified in the NQF-endorsed hemodialysis adequacy measures based on Kt/V (CR 7460). We have also stated that residual renal function should be included in the peritoneal dialysis Kt/V value but not included in the hemodialysis Kt/V value. We recognize the commenters' concerns and agree that it would be difficult, if not impossible, to create accurate, comparable Kt/V measure scores for providers/facilities that might not have used either the Daugirdas II or UKM formula in their Kt/V reporting or that may have incorporated residual renal function differently. In light of this concern, we are not finalizing our proposal to adopt the Kt/V dialysis adequacy measure for the PY 2014 ESRD QIP. We intend to propose to adopt a Kt/V dialysis adequacy measure for future years of the ESRD QIP and welcome public input as we proceed with this process.

We recognize that we are required under section 1881(h)(2)(A)(i) to include measures on dialysis adequacy in the ESRD QIP. For this reason, we are also not finalizing our proposal to retire the URR Hemodialysis Adequacy measure for the PY 2014 ESRD QIP and will continue to include this measure in the PY 2014 measure set. For the reasons stated in the CY 2011 ESRD PPS final rule (75 FR 49182) we believe that the URR Hemodialysis Adequacy measure continues to be an appropriate and accurate measure of hemodialysis adequacy.

Comment: Many commenters strongly supported CMS' proposal to use Kt/V to measure dialysis adequacy beginning with the PY 2014 ESRD QIP because it is widely accepted, is used extensively by the renal community as a measure of dialysis adequacy, and is the basis for measures endorsed by the NQF. One commenter stated a belief that Kt/V is a substandard measure as it does not adequately reflect the patient's quality of life. One commenter noted that CMS should also promote the understanding that minimal Kt/V levels may not be optimal levels and should develop a method for assessing dialysis adequacy across all modalities; another commenter argued that CMS should use the last Kt/V value of the month for each patient to calculate the measure rate because it is the best clinical indicator of the actual dialysis dose delivered to a patient during the month. Some commenters stated that the measure specifications excluding Kt/V values exceeding 2.5 for patients receiving thrice weekly in-center nocturnal hemodialysis may not be appropriate because many patients achieve such values and asked that this exclusion be removed from the measure. Commenters also suggested that adjustments should be made in the Kt/V measure for short daily, more frequent, and nocturnal treatments. Commenters asked CMS to exclude residual renal function (RRF) because it could result in patients being under dialyzed, and it carries operational burdens such as requiring patients to collect urine during a 48-hour period. Some commenters, however, asked CMS to consider RRF in the calculation so that the Kt/V measure does not cause over-treatment. One commenter asked for clarification of the Kt/V specifications in two areas: (i) For PD patients, (a) does CMS require that facilities report the average of all available values for the year; (b) should the facilities record Kt/V every 3 or 4 months; and (c) when should the RRF be measured; and (ii) for both HD and PD, (a) What are the requirements related to urea clearance; and (b) can facilities use creatinine clearance as an alternative? Although not specific, some commenters noted that some of the measure specifications were not clear or were confusing and asked for clarification. One commenter suggested that the proposed Kt/V dialysis adequacy measure be calculated as the average of twelve months Kt/V values in an index year. One commenter questioned the functionality of CROWNWeb to collect Kt/V measurements in CY 2012.

Response: For the reasons stated above, we will not finalize this measure for the PY 2014 ESRD QIP but we intend to propose to adopt a Kt/V dialysis adequacy measure for the program as soon as possible. We will take the many comments regarding the use of Kt/V and questions regarding the measure

[2] Note that in the proposed rule, we mistakenly referred to this measure as #0250.

[3] Note that in the proposed rule, we mistakenly referred to this measure as #0321.

specifications into account as we develop this future proposal.

Comment: Some commenters urged CMS to develop a dialysis adequacy measure for hemodialysis patients who dialyze more or less than three times per week, either at home or in a clinic.

Response: We agree with the commenter that a dialysis adequacy measure for hemodialysis patients who dialyze more or less than three times per week, either at home or in a clinic, is an important quality indicator that should be part of the ESRD QIP. At this time there is no consensus within the ESRD stakeholder community as to what the correct formula or target value should be for this population. We are committed to working with the stakeholder community to achieve consensus on the correct formulas and target values for this population and to developing measures for future years of the ESRD QIP that accurately assesses the adequacy of hemodialysis for this population.

For the reasons stated above, we are not finalizing the proposed Kt/V Dialysis Adequacy measure for the PY 2014 ESRD QIP. We are also not finalizing our proposal to retire the URR Hemodialysis Adequacy measure, but are instead finalizing that this measure will be included in the PY 2014 ESRD QIP. The measure specifications for the URR measure can be found at: *http://www.dialysisreports.org/pdf/esrd/public-measures/DialysisAdequacy-URR65-2013-2014-FR.pdf.*

iii. Vascular Access Type (VAT) Measure

Section 1881(h)(2)(A)(iii) of the Act states, in part, that the measures specified for the ESRD QIP shall include other measures as the Secretary specifies, including, to the extent feasible, measures on vascular access, including for maximizing the placement of arterial venous fistula. For the PY 2014 ESRD QIP, we proposed to adopt a VAT measure. We noted that arteriovenous (AV) fistulae are the preferred type of vascular access for patients on maintenance hemodialysis. Because of the lower complication rates (including reduced infections), decreased risk of patient mortality, and greater cost efficiency associated with this type of vascular access for eligible patients,[4, 5] we proposed to adopt a VAT measure, based on two measures that are endorsed by the NQF. These measures assess (i) The percentage of a provider's/facility's patients on hemodialysis using an autogenous AV fistula with two needles during the last HD treatment of the month (NQF #0257); and (ii) the percentage of a provider's/facility's patients on hemodialysis using an intravenous catheter during the last HD treatment of the month that have had an intravenous catheter in use for 90 days or longer (NQF #0256).

While catheter reduction and increased use of AV fistula are both important steps to improve patient care, we recognized that these two events are tightly interrelated and do not want to penalize providers/facilities twice for related outcomes. We therefore proposed to combine these two separate measures into one measure to contribute jointly to the Total Performance Score. Because the rates and goals for each subcomponent measure are very different, we proposed to calculate separate measure rates for each measure, based on a provider's/facility's performance on each subcomponent measure and to adopt a different methodology (discussed below) for purposes of setting performance standards and scoring providers/facilities on this measure.

As explained above, section 1881(h)(2)(B)(i) of the Act requires that, unless the exception set forth in section 1881(h)(2)(B)(ii) of the Act applies, the measures specified for the ESRD QIP under section 1881(h)(2)(A)(iii) of the Act must have been endorsed by the entity with a contract under section 1890(a) of the Act (which is currently the NQF). Under the exception set forth in section 1881(h)(2)(B)(ii), in the case of a specified area or medical topic determined appropriate by the Secretary for which a feasible and practical measure has not been endorsed by the entity with a contract under section 1890(a) of the Act, the Secretary may specify a measure that is not so endorsed as long as due consideration is given to measures that have been endorsed or adopted by a consensus organization identified by the Secretary. We stated in the proposed rule that we believe that assessing the type of vascular access used in hemodialysis patients is important because clinical evidence has shown that proper vascular access reduces the risk of adverse outcomes such as infections. We also noted that we considered proposing to adopt the two NQF-endorsed measures noted above (#0256 and #0257); however, in order to ensure that these measures fit the purposes of the ESRD QIP, we made modifications to these NQF-endorsed measures. Accordingly, we proposed to adopt this measure under section 1881(h)(2)(B)(ii) of the Act.

We noted in the proposed rule that since July 1, 2010, we have asked dialysis providers/facilities to submit VAT data on ESRD claims (CR 6782). We also proposed that hemodialysis patients with acute renal failure, peritoneal dialysis patients, and patients under 18 years of age would be excluded from this proposed measure. Finally, we stated our belief that adoption of this measure would be consistent with the efforts of the Fistula First initiative, which advances the use of fistulas proven to reduce the risk of infection/morbidity and mortality.[6]

The comments we received on this proposed measure and our responses are set forth below.

Comment: Many commenters supported the proposed VAT measure, noting the benefits of AV fistulas and the problems with catheters. Many commenters also stated that they support CMS' decision to exclude hemodialysis patients with acute renal failure, PD patients, and patients under age 18 from this proposed measure.

Response: We thank commenters for their support.

Comment: Some commenters applauded CMS for proposing to adopt a VAT measure but noted certain ''flaws.'' Commenters noted that the measure (i) ignores grafts, which are preferable to catheters and are available to some patients who are not candidates for fistulas; (ii) is limited to Medicare beneficiaries; (iii) could prejudice facilities with new patient populations who do not yet have a permanent access type and those with patients who refuse or are not eligible for fistulas, causing an access to care issue; and (iv) because of the 90 day requirement for the catheter measure, will provide less than a year's worth of data on which facilities will be evaluated.

Response: We thank commenters for their insights and will address each issue in turn. As we have noted previously, VAT is critical to patient care. Catheters are undesirable due to their high rate of complications, such as infections, and we discourage their use through the proposed catheter submeasure. The preferred type of vascular access is an AV fistula due to lower rates of complications, which we promote through the fistula submeasure. Although grafts do decrease the risk of infections and complications when compared to catheters, grafts do not decrease these risks as much as fistulae. We, therefore, do not believe that grafts

[4] *http://www.kidney.org/professionals/kdoqi/guideline_uphd_pd_va/va_guide2.htm.*

[5] *http://www.fistulafirst.org/AboutAVFistulaFirst/History.aspx.*

[6] *See http://www.fistulafirst.org/* for further information regarding this initiative.

are either beneficial enough to be specifically rewarded or harmful enough to be specifically penalized.

We agree that it would be beneficial to measure vascular access type for all ESRD patients, but, at this time, we are unable to collect the needed data through Medicare claims. We believe that when CROWNWeb becomes available as a data collection vehicle for all providers/facilities, we will be able to collect data on all patients, and we anticipate proposing in future rulemaking to change this measure when these events occur. We are actively monitoring access to care and issues associated with ''cherry-picking,'' and it is our intent to engage the community as we monitor these issues.

Finally, we will be able to measure 1 year of catheter data despite the 90 day pre-requisite. The proposed measure specifications state that the catheter submeasure assesses the percentage of hemodialysis patients in whom (i) A catheter was in use at the last hemodialysis treatment of the month and for each of the prior 90 days; and (ii) a catheter was the *only* means of vascular access (that is, patient did not have an AV fistula or AV graft reported at any time during the 90 days).[7] The measure specifications state that patients with a catheter for at least 90 days will be counted in this measure. For example, if a patient was treated at a facility for all of October, November, and December of 2011 and has a catheter for these months, this catheter would be counted in January 2012.

Comment: One commenter recommended that CMS: (i) Consider developing adjusters for unusual patient factors, facility census, and overall case-mix to discourage ''cherry-picking''; and (ii) develop a mechanism to more effectively engage, and hold accountable, vascular surgeons in creating successful vascular access. Another commenter suggested that the measure be modified to only include patients with catheters for at least 6 months.

Response: We do not agree that only those patients who have catheters 6 months or longer should be included in the measure. We note that the proposed catheter submeasure is based on an NQF-endorsed measure (#0256) which includes patients with a catheter longer than 90 days.[8] It is important to allow facility's some flexibility without underplaying the risks associated with catheter infections. We believe that 90 days allows facilities a window of time to stabilize patients and obtain a functional arteriovenous fistula. We appreciate the role that vascular surgeons play in obtaining vascular access, and we would expect providers/facilities and their staff to work closely together to ensure that proper care is furnished. We note, however, that the ESRD QIP applies only to providers/facilities.

As we noted above, we are actively monitoring access to care and issues associated with ''cherry-picking,'' and will consider proposing additional policies in future rulemaking should we conclude that they would improve the overall quality of the ESRD QIP.

Comment: One commenter suggested that CMS develop a measure to monitor fistula flow.

Response: We thank the commenter for the suggestion. We continue to work on developing measures appropriate for the ESRD QIP.

Comment: One commenter asked for clarification of the VAT measure specifications, including the following: (i) What are the blood flow requirements through the AV fistula; (ii) when in the month is the access type to be reported; and (iii) are Medicare only patients counted? The commenter also asked for clarification of the following catheter submeasure specifications: (i) Are Medicare only patients counted; (ii) do facilities count catheters even if there is another access in place; and (iii) how should facilities report the ''90 day'' requirement if the V-codes do not match this criterion? Some commenters generally commented that the measure specifications are unclear and confusing and asked for clarification.

Response: The proposed VAT measure specifications for the AV fistula submeasure do not contain a blood flow requirement but rather require that the dialysis was performed with two needles. We do not require blood flow because we assume that, if a fistula is used for dialysis treatment, the blood flow achieved is adequate to meet treatment goals. Since July 1, 2010, providers/facilities have been asked to report the access that was used for dialysis during the last dialysis session of the month covered by the claim (CR 6782). These instructions were updated, effective January 1, 2012 (CR 7460), to state that, if an AV fistula/AV graft is used (both must be used with two needles to be reported), but the patient still has a catheter in use providers/facilities should report the presence of both the catheter and the AV fistula/AV graft. Accordingly, for purposes of the measure calculation during the performance period, in instances where an AV fistula or AV graft is reported along with a catheter, we will only count the AV fistula or AV graft as the patient's access type. For purposes of the measure calculation during the baseline period, we exclude any claims reporting more than one access type because we assume this was reported in error since the guidance did not indicate that more than one access type should be reported. Only Medicare patients are included in the proposed VAT measure because we will be calculating it using Medicare claims data. The specifications for the catheter submeasure exclude catheters present for less than 90 days during calculation of the catheter measure rate in order to allow time to establish another form of vascular access. All catheters must be reported regardless of duration of use, the 90 day exclusion will be applied at the time of measure rate calculations.

We thank commenters for requesting clarification, and we would clarify in this final rule that, for the catheter submeasure, a patient will only be attributed to a facility if he or she was at that facility for the 90 days during which he or she had a catheter so that providers/facilities have adequate time to facilitate placement of a permanent access and are not penalized for care provided prior to the patient receiving care at the facility. Because claims do not specify the access type for each patient at every dialysis session, we also clarify that, if the last session of a month indicates only a catheter, we consider that patient to have had the catheter for the entirety of that month.

We further clarify that we will use a patient-month methodology calculating the submeasure rates for the VAT measures (*i.e.* each patient's value for each month will be included in the measure rate[9]).The NQF measures which we referred to in the proposed rule are calculated for a one month time period; however, our measure specifications stated that the VAT measure can be calculated in a manner similar to the PY 2012 ESRD QIP measures which are calculated as a percent of patients (*i.e.* each patient's mean or median value is calculated for the year at the facility and then the patient is classified as meeting the

[7] *See http://www.dialysisreports.org/pdf/esrd/public-measures/VascularAccess-Fistula-2014-FR.pdf* and *http://www.dialysisreports.org/pdf/esrd/public-measures/VascularAccess-Catheter-2014-FR.pdf.*

[8] *See http://www.kidney.org/professionals/kdoqi/pdf/12-50-0210_JAG_DCP_Guidelines-VA_Oct06_SectionC_ofC.pdf; http://www.qualityforum.org/WorkArea/linkit.aspx?LinkIdentifier=id...67692.*

[9] For example, if one patient was treated every month, his/her claim inputs would account for twelve, individual inputs for calculating the measure rate. Whereas a patient that is only seen for four months would be counted as four inputs.

requirement or not). We believe that patient-months would provide a more accurate picture of the care provided to a patient by weighting the VAT by the number of months that access was present. For instance, if a patient had a catheter for seven months out of the year and an AV fistula for 5 months, the patient's ''average'' access would be a catheter and the facility would get no credit for the presence of an AV fistula. By using patient-months, we can more accurately assess these patients by counting seven of 12 months towards the catheter submeasure and five of 12 months towards the AV fistula submeasure. This would also weight each patient's contribution to the facility measure rate by the amount of time a patient received care in that facility.[10]

After considering the comments, we finalize the VAT measure for the PY 2014 ESRD QIP with the clarifications and changes discussed above. This measure is comprised of two submeasures, one of which measures catheters and one of which measures AV fistulas. The VAT measure specifications can be found at *http://www.dialysisreports.org/pdf/esrd/public-measures/VascularAccess-Fistula-2014-FR.pdf* and *http://www.dialysisreports.org/pdf/esrd/public-measures/VascularAccess-Catheter-2014-FR.pdf.*

iv. Vascular Access Infections (VAI) Measure

We proposed to measure dialysis access-related infection rates by assessing the number of months in which a monthly hemodialysis claim reports a dialysis access-related infection using HCPCS modifier V8, and we noted that since July 1, 2010, we have asked dialysis providers/facilities to code all Medicare claims for dialysis access-related infections using this modifier (CR 6782). As discussed more fully in the proposed rule, we proposed to adopt this measure under section 1881(h)(2)(B)(ii) of the Act.

The public comments we received on the VAI measure and our responses are set forth below.

Comment: Many commenters commended CMS for moving towards measuring infections. However, some commenters noted that infections should not be measured through claims because claims data are unable to provide precise identification of healthcare-associated infections (HAIs), nor do they provide information in a timely manner to effectively drive quality improvement. Additionally, several commenters noted or asked for clarification regarding whether claims can result in duplicative counting of a patient with a recurrent infection, penalizing a facility twice (or more) for the same event. Commenters also stated that CMS has not issued specific guidance for uniformity in reporting the V8/V9 modifiers and requested a workable definition of VAI to account for cases where it is difficult to accurately identify the source of infection. One commenter argued that infection measures should not be a composite so that facilities can individualize areas of concern. Some commenters noted the measure's lack of precedent and NQF endorsement, suggesting instead that CMS use the NHSN-endorsed measure (NQF #1460) (which would also prevent redundancy) or change the measure to a reporting measure only.

Response: We agree that reducing vascular access infections is critical to improving quality of care because infections are one of the leading causes of morbidity and mortality among the Medicare ESRD population. Furthermore, many of these infections can be prevented through evidence-based practices. However, in response to these comments, we reassessed our proposal and concluded that the claims-based data that we proposed to use to calculate this measure is not detailed enough and, as a result, could lead to inaccurate assessments and comparisons of quality. In addition, we are also proposing that providers/facilities begin reporting similar information via the CDC NHSN Dialysis Event reporting system and recognize the burden that may result from requiring reporting to two separate systems for purposes of the ESRD QIP. We note that commenters were much more supportive of the CDC infection tracking system and the associated NHSN-based blood stream infection measure which is NQF-endorsed (#1460) and upon which we based the NHSN Dialysis Event reporting measure. Given the overall quality of the data obtained through the NHSN system and the general support expressed by the ESRD community, we believe that patients' needs will be best served if providers/facilities focus efforts on reporting infection data via the CDC NHSN system. We recognize that the proposed PY 2014 NHSN Dialysis Event reporting measure would not be calculated using actual infection data, but we will consider incorporating a measure which is calculated based on the substance of the data collected through the NHSN Dialysis Event reporting system for future years if the data indicates a need for financial incentives to drive improvement.

Comment: One commenter argued that, because of the prevalence and costs associated with catheter related infections, catheter measures should be in the PY 2012 ESRD QIP and, because the ESRD QIP can only penalize a facility by up to two percent, a new program should be implemented to penalize facilities further for catheter infections. Additionally, this commenter stated that ESRD facilities should be required to educate patients on appropriate homecare and supplies to help prevent infection.

Response: We thank the commenter for the input and concern. CMS continues to consider programs within its statutory authority which will lead to an increase in the quality of care provided to Medicare ESRD beneficiaries. The PY 2012 ESRD QIP, however, has been finalized, and we have calculated and will shortly be implementing the resulting payment reductions. We note that the ESRD Conditions for Coverage require that the patient be included as a member of the dialysis multidisciplinary team, and that providers/facilities educate patients and promote appropriate patient care (for example 42 CFR 494.90(d)).[11]

For the reasons discussed above, we are not finalizing the VAI measure for use in the PY 2014 ESRD QIP. We will consider proposing in future rulemaking to adopt a CDC NHSN-based clinical measure that assesses infection rates related to dialysis.

v. Standardized Hospitalization Ratio (SHR)-Admissions Measure

In the proposed rule, we proposed to adopt the SHR-Admissions measure to measure hospitalizations for Medicare dialysis patients. We proposed to adopt this measure under section 1881(h)(2)(A)(iii) of the Act. The proposed SHR-Admissions measure is a risk-adjusted measure of hospitalizations for Medicare dialysis patients. The data needed to calculate the proposed SHR-Admissions measure is based on claims and has been regularly reported to DFR since 1995 (previously known as Unit-Specific Reports). We noted that the measure is an ''all-cause'' measure, meaning that

[10] For example, if one patient was treated every month, his/her claim inputs would account for twelve, individual inputs for calculating the measure rate. Whereas a patient that is only seen for four months would be counted as four inputs.

[11] We also encourage providers/facilities to utilize other clinical practice guidelines regarding patient education. *See,* for example, *http://www.kidney.org/professionals/kdoqi/pdf/12-50-0210_JAG_DCP_Guidelines-VA_Oct06_SectionC_ofC.pdf.*

hospitalizations related to other medical conditions outside of ESRD are included in the measure. We refer readers to the proposed rule for further information on this proposed measure (76 FR 40524).

The public comments we received on the SHR-Admissions measure and our responses are discussed below.

Comment: Many commenters voiced concern that the SHR-Admissions measure does not reflect issues that dialysis facilities can control, may lead to untimely or inappropriate care, and is not adequately transparent in its calculation. Commenters also stated that the measure may lead to ''cherry-picking'' of patients based on their risk of hospitalizations, causing access to care issues for patients with more severe illness. Commenters suggested that, instead, CMS measure hospitalizations resulting from the care, or lack of care, provided by ESRD facilities. Other commenters disapproved of the SHR-Admissions measure because there is currently no mechanism either for correcting or updating patient comorbidity data on CMS' Medical Evidence Reporting Form 2728, and these comorbidities affect the calculation of the measure. Another commenter stated that, because patients in nursing homes are more likely to have a greater number and severity of comorbidities, the metrics for independent living patients and nursing home patients should be compared to determine if the established goals place nursing homes at a disadvantage in achieving such goals. Another commenter suggested that, because of the issues mentioned above, if CMS retains the measure, it should weight it less than the other clinical measures. Some commenters suggested that CMS use a longer baseline period, such as four years.

Response: After reviewing these comments, we have decided, for the reasons articulated by commenters, to not finalize our proposal to adopt the SHR-Admissions measure for the PY 2014 ESRD QIP. We recognize concerns that this measure may not promote improved patient care and may not accurately reflect hospitalizations which can be controlled by dialysis facilities, and we are concerned about the potential for ''cherry-picking.'' We are additionally concerned that we do not yet have the necessary data to more accurately risk-adjust the measure. Therefore, after considering the comments, we agree that the measure as proposed should not be included in the PY 2014 ESRD QIP. We intend, however, to work to develop a measure for future years of the ESRD QIP that does not raise the issues identified by the commenters, and we welcome public input on the composition of such a measure.

Comment: One commenter supported tracking hospitalization rates among dialysis clinic patients. Another commenter suggested that the SHR-Admissions measure could be used as a balancing measure once CMS retires the Hemoglobin Less Than 10 g/dL measure to ensure that patients do not experience hospitalizations due to hemoglobin levels that are too low.

Response: We thank the commenters for their support, but, for the reasons stated above, we will not include this measure in the program at this time. While the SHR-Admissions measure would include hospitalizations due to anemia, the SHR-Admissions is an all-cause measure, and it is uncertain how sensitive it would be in detecting practice changes and patient outcomes related to anemia management alone. As we have stated, we will continue to work with the ESRD community to develop appropriate measures reflecting hospitalizations and will specifically consider measures which account for hospitalizations related to inappropriate anemia management.

For the reasons discussed above, we are not finalizing the SHR-Admissions measure for use in the PY 2014 ESRD QIP. We intend to work with the community to adopt a measure for future years of the program that more accurately measures quality of care in this area.

vi. Minimum Case Number for Clinical Measures and Other Considerations

We proposed that a provider/facility would need to report a minimum number of eleven cases for a proposed clinical performance measure in order to receive a score on that measure (76 FR 40533). As stated above, we believe that this minimum threshold will help reduce the possibility that a small number of poor outcomes artificially, and for reasons unrelated to the quality of care, skew a small provider's/facility's performance score.

The comments we received regarding this proposal and our responses are set forth below. We also address other comments regarding the measures we proposed to adopt for the PY 2014 ESRD QIP below.

Comment: Commenters voiced concerns about CMS' approach to including low-volume facilities in the program because one patient could significantly affect a score for reasons unrelated to quality of care, such as comorbidities. This scoring could, in turn, affect patient volume if patients and their care-givers judge facilities based on their scores. Commenters suggested different minimum case thresholds such as 20 cases or 25 cases, or that providers with fewer cases be scored differently; some commenters also noted that their studies showed that the sample size rather than overall performance is driving the results for facilities and requested that CMS raise the case minimum to 20. Another commenter urged CMS to research the reliability of a measure to set the minimum number of cases, publish minimum case reliability data, and use this data to set a minimum number of cases for all value-based purchasing programs. One commenter urged CMS to re-consider its scoring methodology to analyze for statistical significance. Another commenter stated the belief that the ESRD QIP methodology does not appropriately account for low patient census, unusual treatment setting, or patient case-mix, and recommended that CMS develop a mechanism to adjust for circumstances in which facilities with an unusual care setting, atypical case-mix, or small patient census may be at high risk of incurring penalties for failure to meet performance standards.

Response: We appreciate the commenters' concerns regarding the potential impact of patient case mix on smaller providers/facilities. One goal of the ESRD QIP is to accurately assess the quality of care provided by a provider/facility. However, we recognize that a quality measure score could be impacted by one or more factors unrelated to the care furnished by the provider/facility, and that the potential of such factors to greatly skew the calculation decreases as the number of cases included in the measure increases. Similarly, a provider/facility with a small number of patients could find that one patient's outcome determined its score on a quality measure. Thus we proposed that a provider/facility would need to have a minimum of eleven cases that meet the eligibility criteria for a measure in order to be scored on that measure. This eleven case minimum allows as many providers/facilities as possible to participate in the program. This minimum case number is also consistent with how we have traditionally reported measures on Dialysis Facility Compare. We will continue to closely monitor beneficiary access to care, including evaluating the rate of facility closures.

We recognize, however, that we are introducing new measures and scoring methodologies for the PY 2014 program. As additional data becomes available for these measures, we will conduct additional analysis to assess our case

minimum. If we determine that a different threshold is more appropriate, we will propose an alternative scoring approach in future rulemaking for the ESRD QIP to ensure that smaller or low-volume facilities are not unfairly penalized.

Comment: One commenter urged CMS to use only NQF-endorsed measures for the ESRD QIP because of the NQF's high level of review. Because none of the PY 2014 measures are NQF-endorsed, this commenter does not support their adoption.

Response: We believe that, when evaluating measures for the ESRD QIP, it is important to consider measures endorsed by NQF and other consensus-based entities and we have based our measures on available endorsed measures where possible. We note, however, that under Section 1881(h) of the Act, the Secretary has discretion to adopt measures that are not NQF-endorsed in certain circumstances. We refer readers to our discussions of our rationale for adopting the individual measures, above.

Comment: Commenters noted that the same data sent to multiple laboratories can yield different results from each laboratory. They noted that this variability, rather than the actual care delivered, may affect provider's/facility's rates and, ultimately, their Total Performance Scores. These commenters suggested that CMS incorporate an acceptable standard deviation value into the measure rate calculations in order to mitigate this variability. One commenter also stated that CMS should allow rounding to the tenth to address ''between instrument variability within a single laboratory.''

Response: The proposed PY 2014 scoring methodology allows providers/facilities some latitude to account for issues such as laboratory variability. For example, as further explained below, providers/facilities need not score at the performance standard for each measure in order to avoid a payment reduction. We believe that such flexibility mitigates concerns about details such as laboratory variability. We do agree that it is important to account for the precision of the data that we use to calculate rates and scores, and, as explained above with regard to the Hemoglobin Greater Than 12 g/dl measure, we will specify the number of decimal places for measure calculations to reflect the precision of the data submitted by providers/facilities.

Comment: One commenter requested clarification that the PY 2014 measures do not apply to providers/facilities that only treat patients receiving peritoneal dialysis (PD).

Response: Two of the measures apply to PD patients and, therefore, PD-only facilities will be evaluated on these measures. According to the specifications, adult PD patients would be included in the calculations for the following measures: Hemoglobin Greater Than 12 g/dL, and the Mineral Metabolism reporting measure. Pediatric PD patients qualify for the mineral metabolism reporting measure.

For the reasons stated above, we are finalizing our proposal that a provider/facility must have a minimum of eleven cases for a measure, each with four claims, in order to receive a score for that measure.

vii. National Healthcare Safety Network (NHSN) Dialysis Event Reporting Measure

As we noted in the proposed rule, healthcare-associated infections (HAI) are a leading cause of preventable mortality and morbidity across different settings in the healthcare sector, including dialysis facilities. In a national effort to reduce this outcome, Department of Health and Human Services agencies, including CMS, are partnering with the Centers for Disease Control and Prevention (CDC) to encourage providers to report to the NHSN as a way to track and facilitate action for reducing HAIs.

The NHSN is currently a secure, Internet-based surveillance system that integrates patient and healthcare personnel safety surveillance systems managed by the Division of Healthcare Quality Promotion at the CDC. NHSN has been operational since 2008 with acute care hospitals, long term acute care hospitals, psychiatric hospitals, rehabilitation hospitals, outpatient dialysis centers, ambulatory surgery centers, and long term care facilities. We believe that reporting dialysis events to the NHSN by all providers/facilities would support national goals for patient safety, and particularly goals for the reduction of HAIs. Accordingly, for the PY 2014 ESRD QIP we proposed to adopt a measure that would assess whether providers/facilities enroll and report dialysis event data to the NHSN.

We stated our belief that, by measuring only whether providers/facilities report dialysis event data to the NHSN, providers/facilities would be given time to become familiar with the NHSN reporting process. We also noted our intention in the future to propose to adopt a measure that would score providers/facilities based on actual dialysis events reported to the NHSN if necessary. Specifically, we proposed that providers/facilities: (i) Enroll in the NHSN and complete any training required by the CDC; and (ii) submit three or more consecutive months of dialysis event data to the NHSN.

Section 1881(h)(2)(B)(i) of the Act requires that unless the exception set forth in section 1881(h)(2)(B)(ii) applies to the Act, the measures specified for the ESRD QIP under section 1881(h)(2)(A)(iii) of the Act must have been endorsed by the entity with a contract under section 1890(a) of the Act (which is currently the NQF). Section 1881(h)(2)(B)(ii) of the Act states that, in the case of a specified area or medical topic determined appropriate by the Secretary for which a feasible and practical measure has not been endorsed by the entity with a contract under section 1890(a) of the Act, the Secretary may specify a measure that is not so endorsed as long as due consideration is given to measures that have been endorsed or adopted by a consensus organization identified by the Secretary. Although a measure calculated using NHSN Dialysis Event data is currently endorsed by the NQF, the measure for reporting purposes only has not been NQF-endorsed. We noted that because HAIs are a significant patient safety concern, we intend to propose to adopt one or more measures that assess actual dialysis event rates in the future if necessary.

The public comments we received on the proposed NHSN Dialysis Event reporting measure and our responses are discussed below.

Comment: Many of the commenters voiced general approval of the proposed NHSN reporting measure, but voiced concern that the required training, enrolling, and reporting will unduly burden many facilities, diminishing the amount of time staff can focus on patients. One commenter suggested that CMS more clearly study and define what is needed of staff before moving forward with the measure. Other commenters noted that CROWNWeb will be collecting similar data upon its implementation, leading to redundancy in reporting and further burdening providers/facilities, and requested that CMS delay an infection reporting measure until it can be recorded via CROWNWeb. Commenters also noted that this measure is redundant because it captures data already being captured by other measures. Other commenters expressed concern that the CDC does not have infrastructure to be able to support the high volume of new reports and facilities will not have the necessary reporting mechanisms in place to submit these reports. They suggested that providers/facilities only be scored on enrolling and training for PY 2014, delaying actual reporting of

data to allow providers/facilities to prepare to meet the NHSN requirements and the NHSN to prepare for receiving these reports. One commenter noted that the CDC reporting requires manual entry which can lead to data entry error and suggested the CMS arrange an alternative mechanism for collection; another commenter suggested that this mechanism be CROWNWeb.

Response: The CDC has informed us that it is preparing for the additional volume of new system enrollees and data reporting that will result from the ESRD QIP and is enhancing the NHSN's technical infrastructure. Additionally, our proposal that providers/facilities submit, at a minimum, only three consecutive months of data in CY 2012 is expected to lessen the demand on the NHSN's infrastructure. Thus, we believe that the CDC will be able to accommodate the additional data that will be reported to the NHSN as a result of this measure.

Furthermore, we do not believe that this reporting requirement will unduly burden providers/facilities. For facilities that are currently enrolled in the NHSN, CDC has studied what is required of staff in order to comply with this reporting. In addition, we believe that this reporting requirement will not be burdensome because, reporting this data will only take five to ten minutes per patient, or a total of two hours and ten minutes, of staff time per month for a facility of average size. Although we stated in the proposed rule that we believed that enrolling and training would take a total of 48 hours per facility (76 FR 40540), based on data we have since received from the CDC, we have revised that analysis in the final rule and now believe that both enrolling and training, each a one-time event, will take approximately 8 total hours, spread across a period of several weeks, to complete. Although the NHSN currently requires manual entry of data, CDC is moving towards an electronic system that will further reduce the time required for data entry and reduce the opportunity for error.

Finally, we, as we noted above, we agree with this measure's possible redundancy and we are no longer adopting the VAI measure for PY 2014. Thus, the NHSN measure will be the only measure related to infections. Furthermore, we do not intend to require reporting of the same data elements to both the NHSN and CROWNWeb. It is our intent to require providers/facilities to report dialysis event data to only one system.

Despite our belief that this measure will not unduly burden providers/facilities, to decrease any perceived burden and to further align our reporting requirements with those of NHSN, we will allow all facilities until March 31, 2013 at 11:59 EST to report these data as allowed by the NHSN system.

Comment: One commenter suggested that, if CMS requires this burdensome reporting, CMS should increase its base rate for dialysis care. Another commenter noted that this measure does not increase quality because it only requires reporting.

Response: Section 1881(h) of the Act does not authorize the Secretary to increase the base rate for dialysis care. Furthermore, we do not agree that this measure does not incentivize quality. In order for providers/facilities to successfully report at least 3-consecutive months of data to the NHSN, the provider/facility must either have or must implement processes to record dialysis infection events. This implementation will require providers/facilities to begin monitoring dialysis events and could draw their attention to areas in need of improvement. In future years of the ESRD QIP, we will consider incorporating a measure based on providers'/facilities' infection rates.

For the reasons stated above, we are adopting the NHSN reporting measure for the PY 2014 ESRD QIP.

viii. Patient Experience of Care Survey Usage Measure

Section 1881(h)(2)(A)(ii) of the Act states that the measures specified for the ESRD QIP shall include, to the extent feasible, a measure (or measures) of patient satisfaction as the Secretary shall specify. Information on patient experience with care at a facility is an important quality indicator to help providers/facilities improve services to their patients and to assist patients in choosing a provider/facility at which to seek care. We proposed to adopt a measure for the PY 2014 ESRD QIP that assesses provider/facility usage of the In-Center Hemodialysis (ICH) Consumer Assessment of Healthcare Providers and Systems (CAHPS) Survey. The intent of including this reporting measure is to assess the degree to which providers/facilities are providing their patients with a voice in the quality of their hemodialysis care.

We proposed to measure whether a provider/facility administers the survey, but we did not propose to measure a provider's/facility's actual performance based on the survey results. We expect to adopt such a measure for the ESRD QIP in future rulemaking. For purposes of reporting this proposed measure for the ESRD QIP, we stated that we will consider the ICH CAHPS survey to have been administered if the provider/facility administered it in accordance with the current specifications for the survey. These specifications can be accessed at: *https://www.cahps.ahrq.gov/content/products/ICH/PROD_ICH_Intro.asp?p=1022&s=222.*[12]

We proposed to measure whether a provider/facility has attested that it successfully administered the ICH CAHPS survey during the performance period for the PY 2014 program. We proposed that providers/facilities would be required to submit this attestation through CROWNWeb (which will be implemented nationally in 2012) by January 30, 2013 at 11:59 p.m. EST.

The public comments we received regarding the proposed ICH CAHPS reporting measure and our responses are discussed below.

Comment: Many of the commenters were generally supportive of a patient experience measure, but stated that the ICH CAHPS survey is too burdensome for patients to complete and for providers/facilities to implement. Several of these commenters suggested that, instead, either providers/facilities be allowed to field any type of patient experience survey or CMS adopt a more simplistic patient experience measure. Other commenters suggested that the 57 question survey be split into three independently verified domains, each given to one-third of the patient population and each including a set of core questions, to lessen patient burden and prevent incomplete surveys. One commenter believes the survey should more adequately address the range of care a patient may receive and suggested that CMS develop a process measure to allow patients to voice individual dialysis experiences. Some commenters asked CMS to implement a survey that is validated across all treatment modalities and settings; another commenter asked CMS to clarify whether the survey applies to PD and HHD. One commenter also noted that this measure alone is not sufficient because it requires providers/facilities to attest to administration of the survey, but it does not base payment reductions upon the results of these surveys.

Response: We thank commenters for their support and suggestions. As we noted in the proposed rule (76 FR 40525), we believe empowering patients to voice their concerns is a critical part of quality improvement. Patient surveys can, and should, draw provider/facility

[12] In order to successfully field the survey, the facility/provider must follow the recommendations found at: *https://www.cahps.ahrq.gov/CAHPSkit/files/53_Fielding_the_ICH_Survey.pdf.*

attention to insights that can only be provided by those receiving care. Given the importance of this survey, we do not believe the burden to patients or providers/facilities outweighs the importance of this measure. Many of the concerns the commenters voiced can be mitigated without decreasing the number of questions on the survey or how the survey is administered. For example, as the specifications indicate,[13] patients may take a break during the administration of the survey or take the survey in multiple sittings if they feel that the number of questions is too great to answer at one time. Additionally, the survey requires third-party administration, taking no additional dialysis staff time.

We note that the ICH CAHPS survey was developed through the study of surveys used by dialysis providers. The CAHPS tool went through extensive testing during development including focus groups and one-on-one patient sessions. Thus, we believe that this survey is the best method available at this time to measure patient experience. We also note that we intend to develop a measure that evaluates providers/facilities based on patient responses to the ICH CAHPS survey and use of a uniform survey tool will allow us to more accurately compare providers/facilities in future years of the program.

Furthermore, we disagree that this reporting measure does not improve quality. In order to successfully report the measure, providers/facilities must attest that they have successfully administered the ICH CAHPS survey. The results of these surveys will be reported to the provider/facility by the third-party administrator, and these results can draw providers'/facilities' attention to areas in need of improvement.

Finally, we thank commenters for their suggestions in developing new measures. The ICH CAHPS survey was developed for adult in-center HD patients and this measure therefore does not apply to HHD, PD, or pediatric patients. Further, at this time, we are not aware of a tool which allows patients to rate their experiences for every dialysis experience. We continue to evaluate opportunities to accurately capture patient experience for all modalities.

Comment: Some commenters expressed concern that CROWNWeb will not be available or will be unreliable for submitting the ICH CAHPS survey attestations. These commenters, however, also thought that a paper attestation would be overly burdensome. They encouraged CMS to work with the community to offer an alternative solution.

Response: CROWNWeb is on schedule for national release in CY 2012 which will allow providers/facilities to report their attestations by the January 2013 deadline. We do recognize, however, that unanticipated delays may occur. Therefore, if CROWNWeb will not be available in time for the January 30, 2013 attestation deadline, we will adopt an alternative, electronic mode of attestation and notify providers/facilities of this method through the ESRD Networks.

Comment: One commenter noted discrepancies between the ICH CAHPS specifications and the proposed regulation, including (i) ICH CAHPS requires survey administration to all or a random sample of patients (depending on how many patients the facility serves), whereas the proposed regulation requires surveying in-center hemodialysis patients, and (ii) ICH CAHPS recommends using third-party survey administrators, whereas the proposed regulation seems to expect facilities to survey their own patients. This commenter noted concern that requiring a third-party survey administrator will unequally burden small clinics. Another commenter requested that facilities be allowed to administer their own surveys, provided that those fielding the surveys are not center staff.

Response: As outlined in the specifications,[14] the ICH CAHPS survey was developed for adult, in-center hemodialysis patients and, therefore, this is the population to which it must be administered. Specifically, it must be administered to all patients meeting these criteria or, if a facility cares for over 200 such patients, a random sample of 200. This administration must be completed by a third-party; *https://www.cahps.ahrq.gov/content/products/ICH/PROD_ICH_Intro.asp?p=1022&s=222.* Even if the surveys were not administered by staff with whom the patient had a direct relationship, a patient could still feel pressure to refrain from responding candidly. It is crucial that patients feel comfortable answering honestly and openly, and, therefore, it is vital that this survey be administered by a third-party. As we noted above, although we are aware of the burden associated with this administration, we do not believe it outweighs the importance of recognizing patients' experience of care. For the reasons discussed above, we are finalizing the use of the ICH CAHPS reporting measure in the PY 2014 ESRD QIP.

ix. Mineral Metabolism Reporting Measure

Section 1881(h)(2)(A)(iii) of the Act states that the measures specified for the ESRD QIP shall include other measures as the Secretary specifies, including, to the extent feasible, measures of bone mineral metabolism. Abnormalities of bone mineral metabolism are exceedingly common and contribute significantly to morbidity and mortality in patients with advanced CKD. Numerous studies have associated disorders of mineral metabolism with morbidity, including fractures, cardiovascular disease, and mortality. Overt symptoms of these abnormalities often manifest in only the most extreme states of calcium-phosphorus dysregulation, which is why we believe that routine blood testing of calcium and phosphorus is necessary to detect abnormalities.[15]

The Kidney Disease: Improving Global Outcomes (KDIGO) 2009 guideline recommends that the serum phosphorus level in a dialysis patient generally be lowered toward the normal range, but does not recommend a specific target level that would apply to all patients.[16] The guideline also recommends that therapy to correct for abnormal levels be administered based on the health needs of the individual patient. Accordingly, we noted in the proposed rule that we do not feel it is appropriate at this time to propose to adopt a measure that would penalize providers/facilities if they did not achieve a specific target serum phosphorus level in all patients. We also noted that there is currently no NQF-endorsed measure dealing with the achievement of specific target phosphorus levels. In the time since this rule was proposed, the NQF has endorsed a mineral metabolism measure based on calcium levels (NQF #1454) which we will consider proposing for

[13] *See https://www.cahps.ahrq.gov/content/products/ICH/PROD_ICH_Intro.asp?p=1022&s=222.*

[14] *https://www.cahps.ahrq.gov/content/products/ICH/PROD_ICH_Intro.asp?p=1022&s=222.*

[15] Kidney Disease: Improving Global Outcomes (KDIGO) CKD–MBD Work Group. KDIGO clinical practice guideline for the diagnosis, evaluation, prevention, and treatment of chronic kidney disease–mineral and bone disorder (CKD–MBD). *Kidney International* 2009; 76 (Suppl 113): S1–S130.

[16] Kidney Disease: Improving Global Outcomes (KDIGO) CKD–MBD Work Group. KDIGO clinical practice guideline for the diagnosis, evaluation, prevention, and treatment of chronic kidney disease–mineral and bone disorder (CKD–MBD). *Kidney International* 2009; 76 (Suppl 113): S1–S130.)

future years of the ESRD QIP.[17] We also noted that the NQF has previously endorsed phosphorus and calcium monitoring measures (NQF #0261 and NQF #0255) and, in 2008, we adopted serum calcium and serum phosphorus monitoring as CPMs (*http://www.dialysisreports.org/ESRDMeasures.aspx*). Despite the current lack of consensus on specific target ranges for both phosphorus and calcium levels in dialysis patients, we stated our belief that there is consensus that monthly monitoring of calcium and phosphorus is important for early detection of abnormalities.

Section 1881(h)(2)(B)(i) of the Act requires that unless the exception set forth in section 1881(h)(2)(B)(ii) of the Act applies, the measures specified for the ESRD QIP under section 1881(h)(2)(A)(iii) of the Act must have been endorsed by the entity with a contract under section 1890(a) of the Act (which is currently the NQF). Under the exception set forth in section 1881(h)(2)(B)(ii) of the Act, in the case of a specified area or medical topic determined appropriate by the Secretary for which a feasible and practical measure has not been endorsed by the entity with a contract under section 1890(a) of the Act, the Secretary may specify a measure that is not so endorsed as long as due consideration is given to measures that have been endorsed or adopted by a consensus organization identified by the Secretary.

Although we gave due consideration to the NQF-endorsed measures on phosphorus and calcium level monitoring in dialysis patients, we noted that it is not feasible for us to propose to adopt either of them at this time as we do not currently collect data on whether these levels are checked for each patient each month to allow calculation of the measure rates. We are also not aware that any other consensus building entity has endorsed or adopted measures on this topic. Therefore, we proposed to adopt a Mineral Metabolism reporting measure that is based on the two NQF-endorsed measures, but requires providers/facilities to attest to compliance with monthly monitoring, and we proposed to adopt it under section 1881(h)(2)(B)(ii) of the Act.

We proposed that providers/facilities would be required to submit an attestation through CROWNWeb that they have conducted the appropriate monitoring. We further proposed that this reporting must be electronically submitted by January 30, 2013 at 11:59 p.m. E.S.T.

We also noted that we anticipate adopting, for future years of the ESRD QIP, one or more mineral metabolism clinical measures in addition to or in replacement of the proposed Mineral Metabolism reporting measure.

The public comments regarding the proposed Mineral Metabolism reporting measure and our responses are discussed below.

Comment: Several commenters expressed support for this measure, but requested that CMS also develop an outcomes measure for phosphorus for submission to the NQF for endorsement as soon as feasible. Several commenters urged CMS to also adopt a parathyroid hormone (PTH) measure in order to encompass all areas of bone mineral metabolism. One commenter noted the morbidity and mortality risks associated with extreme PTH values and stated that it is important to monitor the number of patients with PTH below 100 pg/mL and above 400 pg/mL who are not on therapy. Another commenter suggested that CMS consider the addition of a statement in the attestation to indicate that a treatment plan is in place for any abnormalities in bone mineral metabolism; one commenter also expressed concern that the reporting measure alone would not improve quality.

Response: We do not agree that this measure does not incentivize quality. In order to successfully report the measure, providers/facilities must attest that they have monitored calcium serum and phosphorous serum at least once a month for each Medicare ESRD patient, and to do that, the provider/facility must either have or implement processes to collect and monitor this data. This monitoring could draw provider/facility attention to areas in need of improvement and mineral metabolism concerns for individual patients.

We continue to explore new measures in the area of bone mineral metabolism; we will consider commenters' suggestions for additional measures for future years of the ESRD QIP, including outcomes-based bone mineral metabolism measures and measures that indicate whether a treatment plan is in place for identified abnormalities.

Comment: One commenter agreed that the Mineral Metabolism measure should be a reporting measure only and discouraged CMS from instituting a clinical measure unless and until studies prove a causal relationship between certain values and morbidity and mortality.

Response: We thank this commenter for the support. We will consider commenters' suggestion as we develop a mineral metabolism measure for future years of the ESRD QIP.

Comment: Some commenters expressed concern that CROWNWeb will not be available or will be unreliable for submitting the Mineral Metabolism attestations. These commenters, however, also thought that a paper attestation would be overly burdensome. They encouraged CMS to work with the community to offer an alternative solution.

Response: CROWNWeb is on schedule for national release in CY 2012 which will allow providers/facilities to report their attestations by the January 2013 deadline. We do recognize, however, that unanticipated delays may occur. Therefore, if CROWNWeb will not be available in time for the January 30, 2013 attestation deadline, we will provide an alternative, electronic mode of attestation and notify providers/facilities of this method through the ESRD Networks.

For the reasons discussed above, we are finalizing the Mineral Metabolism reporting measure for the PY 2014 ESRD QIP. We note that, as we proposed, a provider/facility must attest that it measured the calcium and phosphorous of each Medicare ESRD patient at least once per month.

3. Performance Period for the PY 2014 ESRD QIP

Having decided to propose to adopt all of CY 2011 as the performance period for the PY 2013 ESRD QIP, we examined what performance period would be most appropriate for the PY 2014 ESRD QIP. We noted that we believe that a 12-month performance period is most appropriate for the ESRD QIP at this point in the program. We also noted that a period of a year accounts for seasonal variations, but also provides a timely incentive and feedback for providers/facilities, as well as timely performance information for Medicare beneficiaries. We have also determined that CY 2012 is the first feasible period during which we can collect sufficient performance period data for all of the proposed measures. Therefore, we proposed to select all of CY 2012 as the performance period for the PY 2014 ESRD QIP.

The comments we received on the proposed selection of CY 2012 as the performance period and on the use of shorter performance periods in future years, and our responses are set forth below.

Comment: Commenters applauded CMS for adopting a prospective

[17] *See http://www.qualityforum.org/Projects/e-g/End_Stage_Renal_Disease_2010/End_Stage_Renal_Disease_2010.aspx* for more information regarding the National Voluntary Consensus Standards for ESRD.

performance period of CY 2012 for the PY 2014 ESRD QIP and noted their disapproval of any performance period of less than a full year.

Response: We thank commenters for their support of the proposed PY 2014 performance period. We also believe that it is most appropriate and helpful for providers/facilities to be scored on a full year of data at this point in the program.

For the reasons stated above, we are finalizing CY 2012 as the performance period for all of the finalized measures for the PY 2014 ESRD QIP.

4. Performance Standards and the Methodology for Calculating the Total Performance Score for the PY 2014 ESRD QIP

Section 1881(h)(3)(A)(i) of the Act requires the Secretary to develop a methodology for assessing the total performance of each provider and facility based on the performance standards with respect to the measures selected for the performance period.

The final rule entitled, ''Medicare Programs; Hospital Inpatient Value-Based Purchasing Program,'' appeared in the **Federal Register** on May 6, 2011 (76 FR 26490) and set forth our view that value-based purchasing represents an important step in revamping how we pay for care and services, allowing CMS to move increasingly toward rewarding better value, outcomes, and innovations instead of merely paying for volume (76 FR 26491). The final rule also set forth principles guiding the development of performance scoring methodologies, including:

- Providers should be scored on their overall achievement relative to national or other appropriate benchmarks. In addition, scoring methodologies should consider improvement as an independent goal.
- Measures or measurement domains need not be given equal weight, but over time, scoring methodologies should be more weighted towards outcome, patient experience, and functional status measures.
- Scoring methodologies should be reliable, as straightforward as possible, and stable over time and enable consumers, providers, and payers to make meaningful distinctions among providers' performance.

For the PY 2014 ESRD QIP, we proposed to adopt a new performance scoring methodology to replace the methodology we are using for the PY 2012 and are finalizing in this final rule for the PY 2013 ESRD QIP. We believe that this scoring methodology will more accurately reflect a provider's/facility's performance on the measures proposed for the PY 2014 ESRD QIP because it will enable us to differentiate between providers/facilities that simply meet the performance standards, those that exceed the performance standards by varying amounts, and those that fall short of the performance standards. We further believe that the proposed methodology will better incentivize providers and facilities to both achieve high Total Performance Scores and improve the quality of care they provide.

i. Performance Standards for the PY 2014 ESRD QIP

For the PY 2014 ESRD QIP, we proposed to establish performance standards under section 1881(h)(4)(A) of the Act. This section of the Act generally provides that, subject to subparagraph (E), the Secretary shall establish performance standards with respect to measures selected for the ESRD QIP for a performance period with respect to a year. Furthermore, under section 1881(h)(4)(B) of the Act, the performance standards established under subparagraph (A) must include levels of achievement and improvement, as determined appropriate by the Secretary. To establish performance standards under section 1881(h)(4)(A) of the Act, the Secretary must also comply with section 1881(h)(4)(C) of the Act, which requires the Secretary to establish performance standards prior to the beginning of the performance period for the year involved.

With respect to the anemia management and dialysis adequacy measures, we proposed to set the achievement performance standard under section 1881(h)(4)(A) of the Act as the national performance rate on each measure during a proposed baseline period. We proposed that the national performance rate for each measure would be calculated at the national aggregate level as the number of Medicare patients for whom the measure was achieved divided by the total number of Medicare patients eligible for inclusion in the measure. We also proposed to set the improvement performance standard as the national performance rate on each measure during the same proposed baseline period. We noted that our goal is to incentivize providers/facilities to achieve these national performance rates, whether they do so by attaining achievement points or improvement points under our proposed scoring methodology (76 FR 40527). We proposed to use a baseline period from July 1, 2010 to June 30, 2011 to calculate the national performance rate. We stated our belief that this baseline period would enable us to calculate national performance rate values for these proposed clinical measures before the beginning of the performance period. We indicated that we would specify these values in the final rule.

With respect to the proposed VAT measure, we proposed to set performance standards using the same methodology and baseline period that we proposed to use for the other proposed clinical measures; however, we proposed to set performance standards for each of the subcomponent measures rather than for the overall combined measure.

We proposed to establish the achievement performance standard for the proposed NHSN Dialysis Event reporting measure as the successful completion by providers/facilities of: (i) Enrollment in the NHSN and completion of the required training during the performance period (as verified by a digital certificate obtained from CDC), or, in the case of providers/facilities that have previously enrolled, continued enrollment throughout the entirety of the performance period; and (ii) submission to the NHSN of at least three-consecutive months of dialysis event data gathered during the performance period.

We proposed to establish the achievement performance standard for the ICH CAHPS reporting measure as an attestation by the provider/facility that it successfully administered the ICH CHAPS survey during the performance period.

We proposed to establish the achievement performance standard for the proposed Mineral Metabolism reporting measure as whether a provider/facility submitted an attestation stating that it measured the serum calcium and serum phosphorus levels of Medicare patients treated by the provider/facility at least once within the month throughout the duration of the performance period.

As noted above, section 1881(h)(4)(B) of the Act provides that the performance standards established under section 1881(4)(A) of the Act must include levels of achievement and improvement, as determined appropriate by the Secretary. We determined that an improvement performance standard is not appropriate for the proposed reporting measures because it is not feasible to measure improvement on these measures at this time because we do not have any existing data we can use to compare provider/facility performance.

We also noted that we do not interpret section 1881(h)(1)(B) of the Act to require that providers/facilities meet or

exceed the performance standards we establish with respect to each individual ESRD QIP measure. Rather, we proposed to implement a scoring methodology that enables a provider/facility to avoid a payment reduction as long as it achieves a minimum Total Performance Score that, as discussed more fully below, is equal to the Total Performance Score it would have received if it had met the performance standards for all of the proposed measures.

Additionally, we noted that, beginning in PY 2015, we intend to propose to establish floors for performance such that performance standards would never be lower than those set for the previous year, even if provider/facility performance fails to improve, or even declines, over time. We also noted that, although we would consider continuing to set the national performance rate as the achievement and/or improvement performance standard, we would also consider establishing future performance standards that reflect performance goals widely recognized by the ESRD medical community as demonstrating high quality care for ESRD patients, should such a consensus be reached.

ii. Setting Performance Benchmarks and Thresholds

Under the proposed scoring methodology for the PY 2014 ESRD QIP, a provider's/facility's performance on each of the finalized clinical measures would be determined based on the higher of (i) an achievement score or (ii) an improvement score. In determining the achievement score, we proposed that providers/facilities would receive points along an achievement range, defined as a scale that runs from the achievement threshold to the benchmark. We proposed to define the achievement threshold for each of these proposed measures as one standard deviation below the achievement performance standard for the measure (which we proposed to set as the national performance rate on the measure during the baseline period). We stated our belief that this achievement threshold will provide an incentive for providers/facilities to continuously improve their performance while not reducing the payments made to providers/facilities that score at or above the national performance rate. We proposed to define the benchmark as the mean of the top decile of provider/facility performance during the baseline period because it represents a demonstrably high but achievable standard of excellence that the best performing providers/facilities reached during the baseline period.

In determining an improvement score for the clinical measures, we proposed that providers/facilities would receive points along an improvement range, defined as a scale running between the provider's/facility's performance on the measure (the improvement threshold) during the twelve-month baseline period and the benchmark. The provider/facility's improvement score would be calculated by comparing its performance on the measure during the performance period (CY 2012) to its performance on the measure during the baseline period (July 1, 2010–June 30, 2011).

iii. Scoring Provider and Facility Performance on Clinical Measures Based on Achievement

We proposed to award between 0 and 10 points for achievement for all of the clinical measures except the VAT measure based on where a provider's/facility's performance falls relative to the achievement threshold and the benchmark for that measure. The following formula is used when the provider's/facility's performance rate is equal to or greater than the achievement threshold (but below the benchmark). Using this formula, a provider/facility would receive a score of 1 to 9 points based on a linear scale disturbing all points proportionately between the achievement threshold and the benchmark so that the interval in performance between the score needed to receive a given number of achievement points and one additional achievement point is the same throughout the range of performance from the achievement threshold to the benchmark.

[9* ((Provider's performance period rate—achievement threshold)/(benchmark—achievement threshold))] + .5.

We proposed that all achievement points would be rounded to the nearest integer, with 0.5 rounded up). If a provider's/facility's score was:

- Equal to or greater than the benchmark, the provider/facility would receive 10 points for achievement
- Less than the achievement threshold (that is, the lower bound of the achievement range), the provider/facility would receive 0 points for achievement.

iv. Scoring Provider/Facility Performance on Clinical Measures Based on Improvement

We proposed that providers/facilities would earn between 0 and 9 points for all of the clinical measures except the VAT measure based on how much their performance on the measure during the performance period improved from their performance on the measure during the proposed individual facility baseline period. A unique improvement range for each measure would be established for each provider/facility. The following formula is used when the provider's/facility's performance rate is equal to or greater than the improvement threshold (but below the benchmark). Using this formula, the provider/facility would receive a score of 0 to 9 improvement points based on equally spaced intervals between the improvement threshold and the benchmark.

[10 * ((Provider performance period rate—provider baseline period rate)/(Benchmark—provider baseline period rate))]—.5, where the provider performance score falls in the range from the provider's baseline period score to the benchmark.

We proposed that all improvement points be rounded to the nearest integer, with 0.5 rounded up). If a provider's/facility's score on the measure during the performance period was equal to or lower than its baseline period score on the measure, the provider/facility would receive 0 points for improvement.

v. Calculating the VAT Measure Score

We proposed to calculate the VAT measure score by first calculating the measure rate according to measure specifications for each of the two measure subcomponents. We proposed that these two rates would then be converted into separate achievement and improvement scores, using the above methodology, for each subcomponent using achievement and improvement ranges specific to each subcomponent measure. The higher of the achievement or improvement score for each measure component would then be averaged to produce one overall score for the VAT measure. We believe that this method of calculating this measure stresses the importance of both vascular access sub-measures without penalizing providers/facilities for two similar measures or unduly weighting a provider's/facility's Total Performance Score in favor of VAT measures.

vi. Calculating the NHSN Dialysis Event Reporting Measure, Patient Experience Survey Usage Reporting Measure and Mineral Metabolism Reporting Measure Scores

We proposed to adopt a different scoring methodology for the proposed NHSN Dialysis Event reporting measure,

Patient Experience Survey Usage reporting measure, and Mineral Metabolism reporting measure.

With respect to the proposed NHSN Dialysis Event Reporting measure, we proposed to assign providers/facilities a score of 0, 5, or 10 points as follows:

- Providers/facilities that enrolled in the NHSN during or before the performance period, completed the required training, and successfully reported at least three-consecutive months of dialysis event data to the NHSN before January 30, 2013, for the period of January 1, 2012–December 31, 2012 would receive 10 points.
- Providers/facilities that enrolled in the NHSN and completed the required training during or before the performance period, but did not report at least 3-consecutive months of dialysis event data to the NHSN before January 30, 2013, for the period January 1, 2012 through December 31, 2012, would receive 5 points.
- Providers/facilities that failed to enroll in the NHSN and/or complete the required training during or before the proposed performance period would receive 0 points.

We proposed to assign providers/facilities a score of 10 points if they attest that they successfully administered the ICH CAHPS survey during the performance period according to the specifications referenced above. Providers/facilities that did not provide such an attestation would receive 0 points.

We proposed to assign providers/facilities that measured the serum calcium and serum phosphorus levels of all Medicare ESRD patients treated by the provider/facility at least once within the month throughout the duration of the proposed performance period a score of 10 points, while providers/facilities that did not do so would receive 0 points. We will measure this by requiring a facility to furnish an attestation at the end of the performance period. Those facilities that do not provide this attestation will receive 0 points.

vii. Weighting of the PY 2014 ESRD QIP Measures and Calculation of the PY 2014 ESRD QIP Total Performance Score

Section 1881(h)(3)(A)(iii) of the Act provides that the methodology for assessing provider/facility total performance must include a process to weight the performance scores with respect to individual measures to reflect priorities for quality improvement, such as weighting scores to ensure that providers and facilities have strong incentives to meet or exceed anemia management and dialysis adequacy performance standards, as determined appropriate by the Secretary.

In determining how to appropriately weight the PY 2014 ESRD QIP measures for purposes of calculating Total Performance Scores, we considered a number of criteria. Specifically, we considered the number of measures we have proposed to include in the PY 2014 ESRD QIP as well as CMS and HHS quality improvement priorities. We stated our belief that weighting the finalized clinical measures equally will incentivize providers/facilities to improve and achieve high levels of performance across all of the measures, resulting in overall improvement in the quality of care provided to ESRD patients. For these reasons, we proposed to assign equal weight to the five proposed clinical measures, with those equal weights adding up to 90 percent of the Total Performance Score. We stated our belief that, while the reporting measures are valuable, the clinical measures measure actual patient outcomes and therefore, justify a combined weight of 90 percent. We proposed that the remaining 10 percent of the Total Performance Score would be comprised of the proposed reporting measures, with each measure weighted equally. We recognize that reporting is an important component in quality improvement, and that this type of measure should also be included in the ESRD QIP, although at a substantially lower weight.

We also considered whether and how we could award a Total Performance Score to providers/facilities that do not report data on at least eleven cases with respect to one or more of the finalized clinical measures. As we stated above, we proposed that this minimum number of cases must be reported with respect to each clinical measure in order for the provider/facility to receive a score on that measure. We stated that because we are proposing to adopt additional measures, we believe that it is appropriate to calculate Total Performance Scores for all providers/facilities. In the case of a provider/facility that has sufficient data from the performance period, but lacks sufficient data from the baseline period, we proposed to only calculate its achievement score, because it would not be possible to calculate its improvement score. We believe that this approach is necessary to ensure that as many providers/facilities receive a score as possible. We proposed that the combined weight of the clinical measures that are scored would still be equal to 90 percent of the Total Performance Score, but only those measures for which providers/facilities report a minimum of eleven cases or more would be included in determining this score, with each such measure being weighted equally. We stated our belief that this approach achieves that goal of including as many providers/facilities as possible, while ensuring the reliability of the measure scores.

Similarly, we proposed to assign equal weight to the proposed NHSN Dialysis Event reporting measure, Patient Experience Survey reporting measure, and Mineral Metabolism reporting measure, with those equal weights adding up to 10 percent of the Total Performance Score. Applying the proposed weighting criteria to a provider/facility that receives a score on all of the proposed measures, we proposed to calculate the provider/facility Total Performance Score using the following formula:

Total Performance Score = [(.18 * Hemoglobin Greater Than 12g/dL Measure) + (.18 * Kt/V Dialysis Adequacy Measure) + (.18 * Vascular Access Type Measure) + (.18 * Vascular Access Infection Measure) + (.18 * SHR–Admissions Measure) + (.0333 * NHSN Reporting Measure) + (.0333 * Patient Experience Survey Reporting Measure) + (.0333 * Mineral Metabolism Reporting Measure)] * 10.

We proposed that the Total Performance Score be rounded-up to the nearest integer (and any individual measure values ending in .5 would be rounded-up).

We solicited public comment on the proposed performance scoring methodology as detailed above. The comments we received and our responses are summarized below.

Comment: One commenter urged that CMS should give greater weight to those measures over which facilities have the greatest control and asked for clarification of the process that will be used to weight measures in future years of the ESRD QIP. Another commenter suggested that CMS weight measures that detect underutilization of services more than those that detect overutilization. Another commenter suggested that CMS weight each measure based on its potential to improve quality.

Response: We believe, at this time, that it is appropriate to weight all of the clinical measures equally and all of the reporting measures equally in order to equally incentivize quality in all of these areas of care. Additionally, we believe that providers/facilities can, overall, impact the outcomes of these measures by providing high-quality,

patient-centered care in accordance with the specified measures. Finally, we do not believe it is appropriate to penalize underutilization more than overutilization. Whether care is substandard due to underutilization or overutilization, it is still substandard care and should be recognized as such. We seek to be as transparent as possible in all aspects of the ESRD QIP, and we will outline the weighting methodology for future years of the program through rulemaking.

Comment: Several commenters argued that the clinical measures should not be weighted equally. Some commenters suggested that the VAT catheter submeasure comprise a larger weight in the final VAT measure score because of the literature suggesting that a reduction in catheters will also reduce infections and mortality. One commenter voiced support for CMS' proposal that the clinical measures compose 90 percent of the Total Performance Score, but argued that, because of the importance of vascular access to overall health and cost reduction, the VAT measure should be weighted at 50 percent with the other clinical measures comprising the equally weighted remainder of the clinical measure score. One commenter suggested that CMS weight the VAT measure less than the other clinical measures. Other commenters suggested that, if CMS retains the VAT measure, the catheter submeasure be weighted greater than the fistula submeasure, perhaps at a 2:1 ratio. Some commenters also suggested that the Patient Experience Survey measure be weighted half as much as the other reporting measures because of the greater clinical impact of the Mineral Metabolism and NHSN reporting measures.

Response: We believe that all of the clinical measures improve care and are important to the program. For the measures finalized for PY 2014, we do not believe any one area of care should be promoted over another, and we believe that providers/facilities should be equally incentivized to achieve high standards in all of the areas evaluated by the clinical measures. Thus, although we have finalized only three of the five proposed clinical measures, we still believe that is appropriate to evenly weight the clinical measures. Additionally, we continue to believe that the clinical measures are vital to improving care and should be weighted more substantially than those measures which to not score providers/facilities based upon actual outcomes. We also believe that appropriate VAT is critical to ensuring optimal patient outcomes. Thus, we do not agree that we should weight this measure less than the other clinical measures. Furthermore, we do not believe it is in the best interest of patients to weight the fistula VAT submeasure more than the catheter VAT submeasure because of our goal to promote fistula use. Although we agree that catheters pose a greater risk to patients, we do not believe this necessitates weighting the catheter subcomponent measure twice as much as the AV fistula subcomponent measure as both are equally important in promoting the best clinical practices with respect to VAT. Therefore, as stated below, we finalize that the three clinical measures will be weighted equally to comprise 90 percent of a providers/facilities Total Performance Score.

As we have also stated, we believe that the Patient Experience Survey is one of the most important tools in impacting clinical practices because it is the only measure that gives patients a voice that may otherwise go unrecognized. Therefore, we do not believe the ICH CAHPS measure should have a lesser weight than the other reporting measures.

Comment: One commenter expressed concern that new facilities without a complete data set available for the measures will be unfairly penalized.

Response: Like all ESRD QIP providers/facilities, new facilities will only be included in the program if they have the requisite amount of data. For each of the clinical measures, there must be at least eleven cases each with four claims, regardless of whether the facility is new or established, in order for such measure to be included in the Total Performance Score. For the reporting measures, however, we acknowledge that we did not specify any data requirements, and we recognize that new facilities may be unfairly penalized if they do not have a sufficient amount of time to fulfill the requirements for the reporting measure.

Accordingly, we finalize that a provider/facility that receives a new CCN on or after July 1, 2012 will have the option to not be scored on the reporting measures. We believe that these new providers/facilities need a reasonable amount of time to put the necessary infrastrucure into place in order to be able to satisfy these measures. For example, with respect to the ICH CAHPS patient survey experience measure, a new facility would need to, at a minimum, hire a third party vendor, treat at least one in-center hemodialysis patient for 3 months, and field the survey (which, depending on the responsiveness of the patient, could take an additional period of months). For these new providers/facilities, that do not successfully satisfy the requirements for the reporting measures, their Total Performance Score will be calculated based solely on the applicable clinical measures that apply to them.

However, we also recognize that under our scoring methodology, a provider/facility's score on a reporting measure could help it achieve the minimum Total Performance Score needed to avoid a payment reduction that it would otherwise receive based solely on its clinical measure score(s). In order to balance these competing concerns, we will allow a new provider/facility (defined above as one that receives a new CCN on or after July 1, 2012) the option to report one or more of the reporting measures. If the new provider/facility chooses to take advantage of this option by successfully satisfying the reporting requirement for one or more of these measures, we will score the new provider/facility on those measures and include those scores in the calculation of that provider/facility's Total Performance Score.

We believe that we should include as many providers/facilities in the program as possible. In the proposed rule, we proposed to calculate Total Performance Scores for all providers/facilities and did not specifically state any minimum number of clinical and reporting measures a provider/facility would need to receive a Total Performance Score. Thus, we clarify in this final rule that a provider/facility will receive a Total Performance Score for PY 2014 if it is eligible for at least one measure. We finalize that, if a provider/facility is eligible for at least one clinical measure and at least one reporting measure, the clinical measures will be equally weighted to sum 90 percent of the Total Performance Score, and the reporting measures will be equally weighted to sum 10 percent of the Total Performance Score. If a provider/facility is only eligible for clinical but not reporting measures or vice versa, we will compute its Total Performance Score based solely on the measures for which it is eligible.

Comment: Some commenters commended CMS for proposing measures, proposing timeframes, and proposing the weight each measure would have in the PY 2014 program within one regulation.

Response: We thank commenters for their support.

Comment: Commenters noted that establishing the achievement threshold as one standard deviation below the national performance rate might lead to inappropriate achievement thresholds as a result of skewed performance distributions. Some commenters

suggested that, instead, CMS base performance standards on the median performance of providers/facilities, with the achievement threshold being at the 15th percentile. Other commenters urged CMS to establish the achievement threshold as the mean performance of facilities performing in the lowest third.

Response: In the proposed rule, we defined the performance standards as the national performance rate, the achievement threshold as one standard deviation below the achievement threshold, and the benchmark as the mean of the top decile of providers/facilities. After receiving public comment, we have found that the distribution of facility performance on several measures is skewed, we have determined that the median is a better measure of central tendency, which was our original intent for these standards. If the measures had had a more even distribution, one standard deviation below the mean would have been calculated to be at approximately 35 percentage points below the mean or the 15th percentile. Thus, we agree with the commenters who suggested that the performance standard should be set at the median performance of providers/facilities during the baseline period. In order to more accurately access the achievement threshold, we will set the performance standards (both achievement and improvement) as the median of facility/provider performance and establish the achievement threshold at the 15th percentile because the 15th percentile represents approximately one standard deviation below the median had the distributions been even.

Comment: Several commenters argued that the performance standards must be published and commenters must be allowed to comment on these standards and the related scoring methodology before the beginning of the performance period.

Response: Our proposal set forth the performance standards that would apply to the PY 2014 clinical measures and assigned example numerical values to each of those proposed measures using data from July 1, 2010 through November 30, 2010, which was the most current data that was available at the time that overlapped with the proposed performance period. Because of data limitations related to the claims verification process which allows providers/facilities a period of time to review and contest claims, we are able in this final rule to finalize the performance standards that will apply to the PY 2014 ESRD QIP but cannot yet assign actual numbers to those finalized standards based on a full year of data. However, we will post these numbers on the following Web site: *http://www.dialysisreports.org/pdf/esrd/public-measures/UpdatedBaseline-2014-FR.pdf*. We are publishing in this final rule numbers based on data from July 1, 2010 through March 30, 2011, or nine of the 12 months of baseline data. We will publish numbers based on 12 months, July 1, 2010 through June 30, 2011, on or before January 31, 2012 at the following Web site: *http://www.dialysisreports.org/pdf/esrd/public-measures/UpdatedBaseline-2014-FR.pdf*. We do not anticipate that the final numbers will differ substantially from these numbers.

We believe that this approach complies with section 1881(h)(4) of the Act, including the requirement in subparagraph (C) that the Secretary establish performance standards under subparagraph (A) prior to the beginning of the performance period. However, we recognize that providers/facilities are very interested in these numbers and have a legitimate need to learn what they will be with respect to a payment year as soon as possible. Although we are not able to provide them in this final rule for the reasons discussed above, we anticipate that beginning with the PY 2015 ESRD QIP, we will be able to select a baseline period that ends early enough to make these numbers available in the final rule that applies to that program. The estimated actual values that apply to the PY 2014 performance standards, based on nine of the twelve months of baseline data, are shown in Table 5 below.

Comment: One commenter suggested that CMS modify the payment reduction scale to encourage providers to perform well on all of the measures.

Response: As we noted in the proposed rule, we do not interpret section 1881(h)(1)(B) of the Act to require that providers/facilities meet or exceed the performance standards we establish with respect to each individual ESRD QIP measure. Rather, we believe that our proposed approach best balances the goal of incentivizing providers/facilities to provide quality care across all of the measures while still recognizing the higher quality of care provided by those providers/facilities that exceed the performance standards on certain measures. Additionally, we believe that this approach will give providers/facilities the flexibility they need to become familiar with the new scoring methodology.

Comment: Several commenters commended CMS for recognizing both achievement and improvement in its scoring methodology. Some commenters suggested that CMS implement a methodology to ensure that improvement standards do not diminish incentives for achievement (for example, facilities should be required to meet minimum thresholds prior to having improvement rewarded). Commenters noted that CMS should adjust its scoring methodology to ensure that facilities performing consistently above the achievement threshold are not penalized. Under the proposed scoring system, these facilities would not be eligible for improvement points and could perform worse in the long run than those who performed less well in baseline years. These commenters suggested that CMS establish a consistency multiplier. Another commenter proposed that CMS set a fixed achievement threshold in order to prevent penalizing facilities that have improved (that is, improvement will raise the standard which will cause the achievement threshold to rise which will cause the provider to have to improve more). One commenter stated that the performance standards for both PY 2013 and PY 2014 should be less stringent to decrease the incentive to game the system.

Response: We believe that the scoring methodology we are finalizing for the PY 2014 ESRD QIP provides appropriate incentives to providers/facilities to both achieve and improve. We acknowledge that under the methodology, it might be possible for a provider/facility to attain a lower measure rate on one or more measures than the measure rate attained by other providers/facilities but receive more points overall in the form of improvement points. However, we believe it is appropriate to incentivize lower-achieving facilities to continue to improve, even if their measure rates do not meet the achievement threshold and even if their improvement points would be higher than their achievement points. For these providers/facilities, our scoring methodology allows us to reduce the amount of a payment reduction that they might otherwise receive because they have improved over their baseline rates. Additionally, because providers/facilities can score 1–10 points for achievement and only 0–9 points for improvement, providers/facilities can always be rewarded more for achieving at higher levels. We agree with the commenters that the performance standard will likely continue to rise if we continue to utilize this scoring methodology in future years, and we will take these comments into consideration as we gain experience with the ESRD QIP.

Additionally, we do not believe that the performance standards for PY 2013 or PY 2014 are too stringent. For PY

2014, the performance standard is at the midpoint of providers'/facilities' performance. Thus, this standard has been achieved by half of all facilities. To begin scoring achievement points, providers/facilities need only be at or above the 15th percentile. Thus, we believe that the performance standards have been and will continue to be attainable. We will be monitoring outcomes and practice patterns in the ESRD setting to determine whether any ESRD QIP policies might be encouraging activities that could be described as ''gaming,'' and, to the extent necessary, we will make changes to the ESRD QIP to lessen the potential that such activities occur.

Comment: Some commenters suggested that there was an error in CMS' proposed scoring methodology because, if a facility does not improve at all, it is possible for that facility to receive a negative improvement score; these commenters asked CMS to clarify that facilities with the same or lower improvement score compared to their baseline score will have an improvement score of zero.

Response: Under the proposed scoring methodology, scores would be rounded to the nearest integer, with a score of 0.5 rounded up to the next highest integer. Accordingly, the lowest improvement score a provider/facility could receive is (−) 0.5, and this score would be rounded to zero. The commenter is correct in that the lowest score a facility can receive for both improvement or achievement is zero.

Comment: One commenter expressed concern that, by setting the benchmark score at the mean of the top decile of provider/facility performance, many facilities will be unfairly penalized and requested that CMS set a benchmark closer to the national performance rate.

Response: As noted, one of the goals of the ESRD QIP is to incentivize the highest quality care. However, we agree that the benchmark should be lowered to reflect a more attainable standard, and because we are changing the achievement threshold to a fixed point, we also believe it is appropriate to modify our methodology for calculating the benchmark. To more accurately represent the top of all performers, we will calculate the benchmark at the 90th percentile instead of as the mean of the top decile of performers; while the mean of the top decile will vary depending upon the rates of the top ten percent of performers for each measure, the 90th percentile is a fixed place on all measure performance distributions, thus allowing a more consistent calculation throughout various distributions for all measures. We believe that this change conforms the benchmark to the new performance standards and achievement threshold while still accomplishing the benchmark's intent to incentivize providers/facilities to provide the highest achievable level of care.

For the reasons discussed above, we are finalizing the PY 2014 ESRD QIP scoring methodology to score each clinical measure rate as the higher of the measure's achievement or improvement score, as explained above. We are also finalizing the proposed scoring methodology for calculating the reporting measure scores and the requirement that a provider/facility must have received a CCN on or before July 1, 2012 in order to automatically be scored on the reporting measures. We note that, as discussed above, for the NHSN Dialysis Event measure, we will now allow providers/facilities until March 31, 2013 at 11:59 EST to report the required three consecutive months of data from the performance period. We are also finalizing our proposal to calculate the VAT measure score as the average of the submeasure scores.

Based on public comments, we are not finalizing the proposed definition of performance standards, achievement thresholds, or benchmarks which were based on means and standard deviations. Due to skewed distributions of facility performance, we are finalizing the performance standards (both achievement and improvement) as the median (50th percentile), the achievement threshold as the 15th percentile, and the benchmark as the 90th percentile. We agree with commenters that this better reflects the central tendency and spread of these performance distributions.

We are finalizing the proposed baseline period of July 1, 2010–June 30, 2011. We are also finalizing our proposal that providers/facilities that do not have enough data in the baseline period to calculate a rate for a measure but do have enough data to calculate a measure rate in the performance period will receive a score on that measure based solely on achievement. We also finalize that the clinical measures for which a provider/facility is eligible will be equally weighted to comprise 90 percent of its Total Performance Score, and the reporting measures for which a provider/facility is eligible will be equally weighted to comprise 10 percent of its Total Performance Score. If a provider/facility is only eligible for one type of measure, the provider's/facility's Total Performance Score will be calculated based on that measure(s) alone.

Because of the data limitations explained above, we are unable at this time to assign final numbers to the performance standards, achievement thresholds, and benchmarks. We will publish these numbers at the following Web site: *http://www.dialysisreports.org/pdf/esrd/public-measures/UpdatedBaseline-2014-FR.pdf* on or before January 31, 2012. Below, in Table 4 and 5, we have provided estimates based upon data from July 1, 2010 through March 30, 2011. We do not believe that these estimates will vary significantly from our finalized numbers.

BILLING CODE 4120–01–P

Table 4. Estimated Achievement Thresholds and Benchmarks for the PY 2014 ESRD QIP.

Quality Measure	Measure Description/Definition	Achievement Threshold (15th Percentile)	Benchmark (90th Percentile)
Hemoglobin Greater Than 12 g/dL Measure	% of patients with hemoglobin greater than 12 g/dL	**14%**	**0%**
Dialysis Adequacy Measure (URR)	% of hemodialysis (HD) patients with URR ≥ 65	**91%**	**100%**
Vascular Access Type Measure	Average of the two sub-measures		
(Fistula)	*% of patients receiving treatment with fistulae*	**44%**	**73%**
(Catheter)	*% of patients receiving treatment with catheters*	**24%**	**5%**
NHSN Dialysis Event Reporting Measure	Enroll and report at least 3 months of dialysis event data	N/A	N/A
Patient Experience of Care Survey Usage Reporting Measure	Providers/facilities must attest that they successfully fielded survey during the performance period	N/A	N/A
Mineral Metabolism Reporting Measure	Measure serum calcium and serum phosphorus levels of Medicare patients	N/A	N/A

Table 5. Estimated Numerical Values for the Finalized Achievement and Improvement Performance Standards for the PY 2014 ESRD QIP Clinical Measures Using July 1, 2010 to March 30, 2011 Data

Measure	Achievement/Performance Standard
Hemoglobin > 12 g/dL	5%
Vascular Access Type	
%Fistula	57%
%Catheter	13%
URR	97%

BILLING CODE 4120–01–C

vii. Examples for 2014 ESRD QIP Performance Scoring Model

Below, we provide examples to illustrate the performance scoring model. Figures 1–4 illustrate the scoring for a clinical measure. Figure 1 shows Facility A's performance on the URR measure. The example benchmark (90th percentile) calculated for this measure in this case is 100 percent, while the example achievement threshold (15th percentile) is 91 percent. Facility A's performance rate of 100 percent during the performance period meets or exceeds the benchmark, so Facility A would earn 10 points (the maximum) for achievement for this measure. (Because, in this example, Facility A has earned the maximum number of points possible for this measure, its improvement score is irrelevant.)

Figure 1. Example of Dialysis Facility Earning Points by Achievement or Improvement:

Facility A

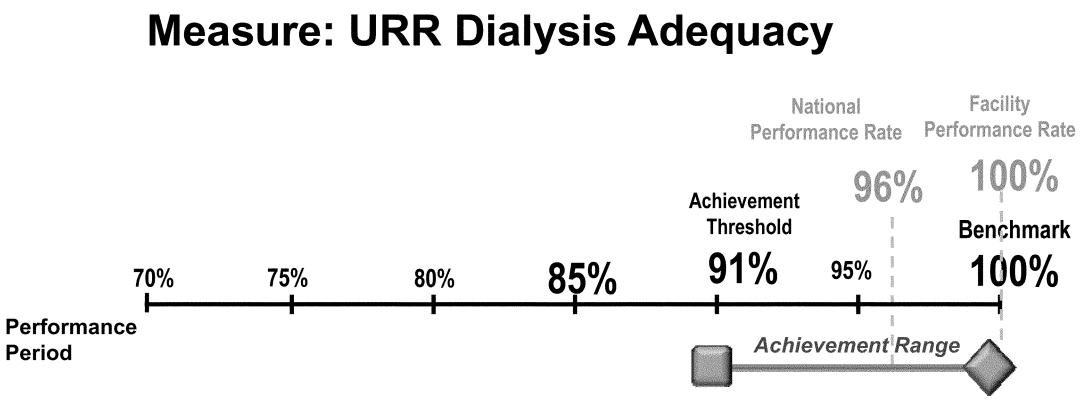

Figure 2 and 3 show the scoring for another facility, Facility B. As illustrated below, the facility's performance on the URR measure went from 80 percent in the baseline period to 95 percent during the performance period.

Figure 2. Example of Dialysis Facility Earning Points by Achievement or Improvement:

Facility B

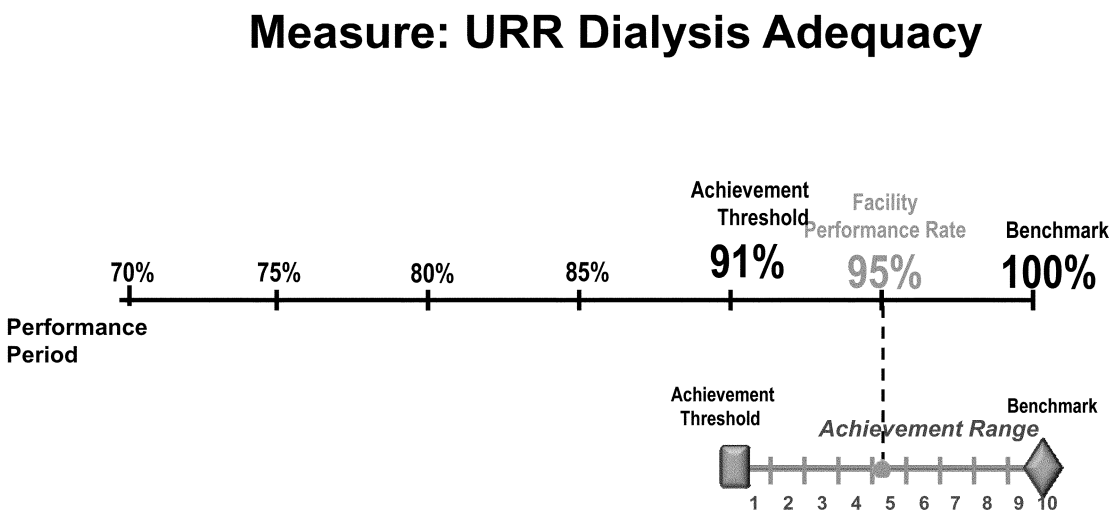

Applying the achievement scale, Facility B would earn 5 points for achievement, calculated as follows:

$9 * [(95 - 91)/(100 - 91)] + .5 = 4.5$, which is rounded to 5 points.

However, because Facility B's performance during the performance period is also greater than its baseline period performance (but Facility B's performance period score is less than the benchmark), it would be scored based on improvement as well, as shown by Figure 3, below.

Figure 3. Example of Dialysis Facility Earning Points by Achievement or Improvement:

Facility B

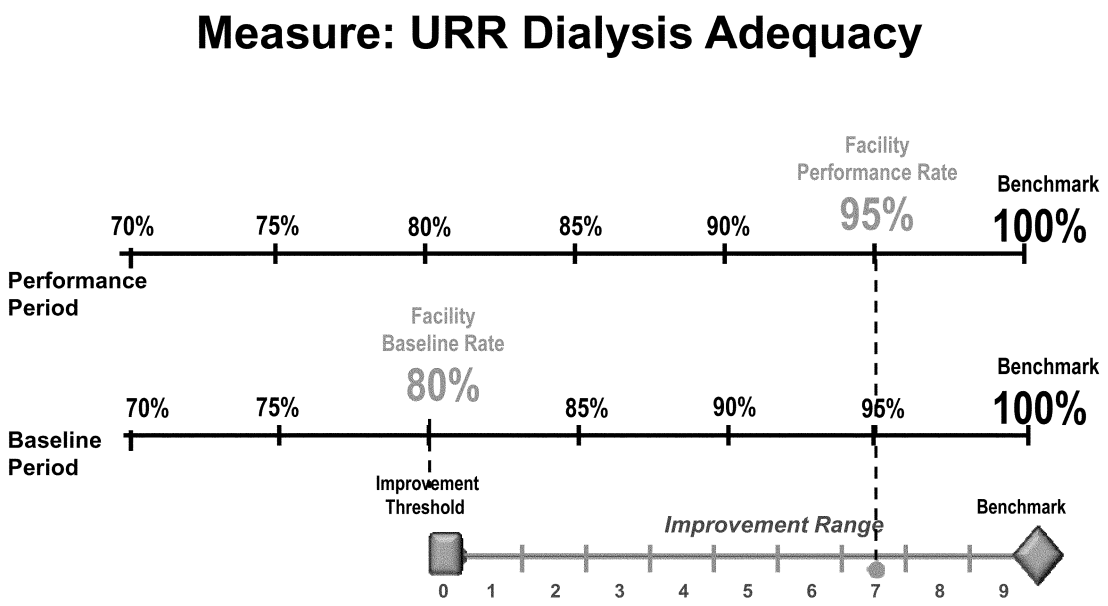

Applying the improvement scale, based on Facility B's period-to-period improvement, from 80 percent to 95 percent, Facility B would earn 7 improvement points, calculated as follows:

10 * [(95 − 80)/(100 − 80)] − .5 = 7.5 − .5 = 7.0, which would be rounded to 7 points.

Because the higher of the two scores is used for determining the measure score, Facility B would receive 7 points for this measure.

In Figure 4 below, Facility C's performance on the URR measure drops from 80 percent in the baseline period to 75 percent in the performance period, a decline of 5 percent.

Figure 4. Example of Dialysis Facility Earning Points by Achievement or Improvement:

Facility C

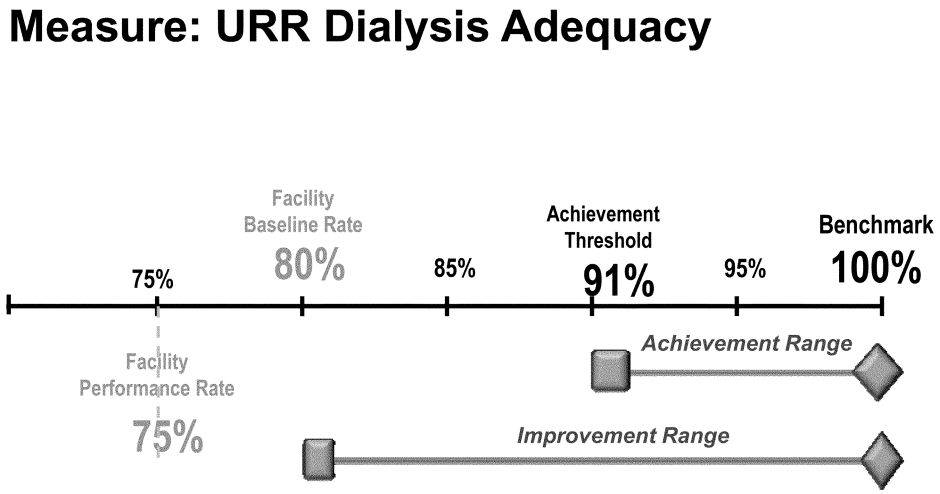

Because Facility C's performance during the performance period falls below the achievement threshold of 91 percent, it would receive zero points for achievement. Facility C would also receive zero points for improvement because its performance during the performance period was lower than its performance during the baseline period. In this example, Facility C would receive zero points for the URR Measure.

The method illustrated above would be applied to each clinical measure in order to obtain a score for each measure. Scores for reporting measures are calculated based upon the methodology as proposed.

Applying the weighting criteria to a provider/facility that receives a score on all finalized measures, we calculate the provider's/facility's Total Performance Score using the following formula:

Total Performance Score = [(.300 * Hemoglobin Greater Than 12g/dL Measure) + (.300 * URR Hemodialysis Adequacy Measure) + (.300 * Vascular Access Type Measure) + (.0333 * NHSN Reporting Measure) + (.0333 * Patient Experience Survey Reporting Measure) + (.0333 * Mineral Metabolism Reporting Measure)] * 10.

The Total Performance Score be rounded to the nearest integer (and any individual measure values ending in .5 would be rounded to the next higher integer)).

However, if, for example, a provider/facility did not receive a score on the proposed VAT measure, the provider's/facility's Total Performance Score would be calculated as follows:

Total Performance Score = [(.4500 * Hemoglobin Greater Than 12g/dL Measure) + (.4500 * URR Hemodialysis Adequacy Measure) + (.0333 * NHSN Reporting Measure) + (.0333 * Patient Experience Survey Reporting Measure) + (.0333 * Mineral Metabolism Reporting Measure)] * 10, (the Total Performance Score will be rounded to the nearest integer (and any values ending in .5 would be rounded to the next higher integer)).

Finally, if, for example, a provider/facility qualified for two of the reporting measures,[18] the provider's/facility's Total Performance Score would be calculated as follows:

Total Performance Score = [(.300 * Hemoglobin Greater Than 12g/dL Measure) + (.300 * URR Hemodialysis Adequacy Measure) + (.300 * Vascular Access Type Measure) + (.05 * NHSN Reporting Measure) + (.05 * Mineral Metabolism Reporting Measure)] * 10.

6. Payment Reductions for the PY 2014 ESRD QIP

Section 1881(h)(3)(A)(ii) of the Act requires the Secretary to ensure that the application of the scoring methodology results in an appropriate distribution of payment reductions across providers and facilities such that providers and facilities achieving the lowest Total Performance Scores receive the largest payment reductions. We have adopted a sliding scale of payment reductions for the PY 2012 ESRD QIP (76 FR 634) and have finalized a sliding scale in this final rule for PY 2013 ESRD QIP. In developing a payment reduction scale for the PY 2014 ESRD QIP, we sought to create an approach that would retain aspects of the tiered sliding scale selected for the PY 2012 ESRD QIP, but also reflect the change in provider/facility scores under the new scoring methodology. Under the proposed approach, a provider/facility would not be required to meet or exceed the performance standards with respect to each of the finalized measures in order to avoid receiving a payment reduction under the ESRD QIP. Rather, even if a provider/facility failed to meet or exceed the performance standards with respect to one or more of these measures, the provider/facility could avoid a payment reduction if it achieved a minimum Total Performance Score that is equal to or greater than the minimum Total Performance Score it would receive if it had met the performance standards for each finalized measure, or, in the case of the VAT measure, for the two subcomponent measures. At the time we issued the proposed rule, we were unable to calculate the minimum Total Performance Score because we did not have the data for the baseline period. We estimated, however, that the minimum Total Performance Score that a provider/facility would have to achieve to avoid a payment reduction would be 60 points, and we stated that we would specify the exact number in the final rule. We proposed to implement at least a 1.0 percent payment reduction for all providers/facilities that fail to meet or exceed this minimum Total Performance Score.

To ensure that the proposed payment reduction methodology complies with the section 1881(h)(3)(A)(ii) requirement that providers and facilities achieving the lowest Total Performance Scores receive the largest payment reductions, we proposed to increase the payment reduction from 1.0 percent to 1.5 percent for all providers/facilities that fail to achieve a Total Performance Score that is 10 points below the minimum Total Performance Score (described above). Additionally, we proposed to increase the payment reduction to 2.0 percent for all providers/facilities that fail to achieve a Total Performance Score that is 20 points below the minimum Total Performance Score (described above). We stated our belief that such a sliding scale will incentivize providers/facilities to meet the performance standards and continue to improve their performance because even if a provider/facility fails to achieve the minimum Total Performance Score, such provider/facility will still be incentivized to strive for, and attain, better performance in order to reduce the amount of its payment reduction.

The comments we received on the proposed payment reductions are set forth below.

Comment: One commenter opposed the elimination of the 0.5% payment reduction level and suggested that there be at least five tiers in the payment reduction scale because, in addition to allowing comparisons between years, five-tiers in the payment reduction scale is more consistent with the literature supporting value-based purchasing programs.

Response: We agree with the commenter's concern and will include the 0.5 percent payment reduction level as an additional level in the PY 2014 ESRD QIP payment reduction scale. Thus, the payment reductions for PY 2014 will range on a sliding scale from 0.5 percent to 2.0 percent with the provider/facility moving down a tier for every ten points its Total Performance Score falls below the minimum Total Performance Score. We are finalizing new measures, a new scoring methodology, and rigorous performance standards which are not familiar to the community. We believe that including this additional payment reduction level will allow time for us as well as providers/facilities to become familiar with this new structure.

Comment: One commenter disapproved of setting 10 points as a threshold for each reduction in payment for PY 2014 when CMS cannot yet estimate the minimum Total Performance Score because the distribution in payment reductions is not yet known and will not be known until the performance period has ended. Instead, the commenter suggested that CMS allow for a sufficient period of

[18] This could occur, for example, if a provider/facility is a pediatric and/or peritoneal facility only.

time for the quality measure scores to be made publicly available and data to be collected to assess the potential impact of the QIP on the facilities. Another commenter suggested that CMS score the PY 2014 measures on a 30 point scale consistent with PY 2012 so that facilities and consumers can meaningfully compare performance from year to year.

Response: We appreciate the commenter's concern regarding how we establish the minimum Total Performance Score and each successive payment reduction level. Although we will not know the distribution of payment reductions based on the minimum Total Performance Score until we have the data at the end of the performance period, given our current estimates of the data, we believe that, the payment reductions will be appropriate to incentivize providers/facilities to improve patient care. We have calculated these estimates based on the data currently available to us, as further explained in the Regulatory Impact Statement, and they are similar to the reductions for PY 2012 and our estimates for PY 2013. However, in light of the commenter's concern, we will further adjust how we set the minimum Total Performance Score. Rather than set the minimum Total Performance Score as the score a provider/facility would receive if it had met the performance standards for each finalized measure, we will define the minimum Total Performance Score as the score a provider/facility would receive if it had met the performance standards for each of the finalized clinical measures. Recognizing many commenters' concerns regarding the new reporting measures, and our lack of data on which to approximate likely provider/facility performance, we will exclude them from the calculation of the minimum Total Performance Score. We believe this policy will balance our desire to appropriately incentivize improvements in clinical quality while ensuring that providers/facilities are not unduly penalized.

Based on our analysis of the data from July 1, 2010 through March 30, 2011, we estimate that the PY 2014 minimum Total Performance Score will be 56 points. We will publish the final minimum Total Performance Score at the following Web site: *http://www.dialysisreports.org/pdf/esrd/public-measures/UpdatedBaseline-2014–FR.pdf* on or before January 31, 2012.

Additionally, although we generally believe that the ESRD QIP should provide a means for patients to evaluate their providers/facilities over time, we do not believe that, even if we set performance on a 30 point scale, PY 2014 would be comparable to previous years of the ESRD QIP because of the significant changes to scoring methodology and measures. We believe a 100 point scale will accommodate a growing number of measures that may be adopted in future years of the QIP and plan to consistently use the 100 point scale going forward.

Based on the public comments we received, we are finalizing most of the payment reduction methodology that we proposed; however, we are adding an additional payment reduction level of 0.5 percent, with the scale now ranging from 0.5 percent to 2.0 percent. For every ten points a provider/facility's Total Performance Score falls below the minimum Total Performance Score, it will receive an additional 0.5 percent reduction. We are modifying our definition of the minimum Total Performance Score to be equal to the score a provider/facility would receive if it performed at the performance standards for each of the clinical measures.

As noted above, we are unable to publish a finalized minimum Total Performance Score until we assign a final number to each finalized performance standard. We will publish a finalized minimum Total Performance Score at the following Web site: *http://www.dialysisreports.org/pdf/esrd/public-measures/UpdatedBaseline-2014–FR.pdf* on or before January 31, 2012. Based upon the performance standard examples we provided above, we estimate that the minimum Total Performance Score will be 56. We do not anticipate that this estimate will substantially change. Using this estimation, the payment reduction scale would be as detailed below in

Table 6. Estimated Payment Reduction Scale for PY 2014.

Score	Reduction
100 to 56	0%
55 to 46	0.5%
45 to 36	1.0%
35 to 26	1.5%
25 or below	2.0%

7. Public Reporting Requirements

Section 1881(h)(6)(A) of the Act requires the Secretary to establish procedures for making information regarding performance under the ESRD QIP available to the public, including information on the Total Performance Score (as well as appropriate comparisons of providers and facilities to the national average with respect to such scores) and performance scores for individual measures achieved by each provider and facility. Section 1881(h)(6)(B) of the Act further requires that a provider or facility have an opportunity to review the information to be made public with respect to that provider/facility prior to such information's publication.

In addition, section 1881(h)(6)(C) of the Act requires the Secretary to provide each provider and facility with a certificate containing its Total Performance Score to post in patient areas within the facility. Finally, section 1881(h)(6)(D) of the Act requires the Secretary to post a list of providers/facilities and performance-score data on a CMS-maintained Web site.

For both the PY 2013 and PY 2014 ESRD QIP, we proposed no change in the implementation of these statutory provisions (section 1881(h)(6)(A) through section 1881(h)(6)(D) of the Act) from the proposals finalized in the 2012 ESRD QIP final rule (76 FR 636 through 639), wherein we finalized the establishment of procedures for providers/facilities to review the information to be made public and the procedures for informing the public through facility-posted certificates.

The comments we received on the public reporting proposals are set forth below.

Comment: Some commenters noted that information reported to the public should be meaningful and requested that CMS include language on the ESRD QIP certificates stating (i) The date range of the performance period; (ii) the date ranges used to compute the performance standards; and (iii) a statement that the data may not reflect current medical standards or facility/provider performance.

Response: The certificates for PY 2012 will indicate the year of the performance period. We will monitor whether beneficiaries find the certificates to be effective in conveying performance, and we will continue to evaluate the information they should include for PY 2013 and PY 2014. We believe that the intent of the certificates is to convey information about facility performance in an understandable, clear, and concise manner. We do not believe that details about the baseline data used to compute the performance standards, or disclaimers about the limitations of the data, are required to convey this basic message, but we encourage providers/facilities to discuss these certificates with their patients and provide any further explanatory information they feel is necessary.

Comment: Several comments requested that CMS address procedural issues related to facility Performance Score Reports.

Response: Performance Score Reports (PSRs) are distributed to providers/facilities for their review after the end of the performance period but before payment reductions are assessed. For PY 2012, PSRs were sent to providers/facilities in July 2011, and provider/facilities were permitted to preview the reports and ask us any questions. We are currently reviewing our PSR process, and we will consider commenters' suggestions as we develop the PSRs for PY 2013 and PY 2014.

For the reasons set forth above, we are finalizing the public reporting requirements as proposed.

8. Future QIP Measures

As part of our effort to continuously improve the ESRD QIP, we are working to adopt additional robust measures that provide valid assessments of the quality of care delivered to ESRD beneficiaries. To that end, we are developing measures that apply to all modalities (including home and in-center dialysis) and the pediatric population. We also sought public comment on the inclusion of iron management measures, serum calcium management measures, and serum phosphorus management measures for future years of the ESRD QIP. Specifically, we sought public comment on:

- Measurement of Serum Calcium Concentration.
- Measurement of Serum Phosphorus Concentration.
- Assessment of Iron Stores.

These measures are currently collected through CROWNWeb as part of the CPM set. The full specifications for these measures may be accessed at: *http://www.dialysisreports.org/ESRDMeasures.aspx*.

The comments we received on future measures are set forth below.

Comment: Many commenters suggested measures and/or domains for future ESRD QIP payment years. These suggestions included (i) Iron measures, perhaps measuring trends in ferritin; (ii) upper serum phosphorus limit measures; (iii) hypercalcemia measures (*e.g.* NQF #1454); (iv) PTH measures; (iv) albumin measures; (v) immunization measures; (vi) fluid management measures; (vii) quality of life measures; (x) measures focusing upon the nurse-patient relationship; (viii) measures assessing the number of HHD and PD patients; (ix) blood pressure measures; and (x) standardized mortality rate measures. Other commenters suggested that we make the reporting measures clinical measures as soon as feasible. Commenters also encouraged us to consider domains and measures in which the pediatric community, HHD patients, and PD patients can more actively participate.

Response: We thank commenters for these suggestions. We continue to monitor measure development and valid and available data sources and look forward to working with the ESRD community to choose future measures which drive quality of care.

Comment: One commenter stated a belief that that CMS should not adopt any current or future measures that do not indicate a causal relationship between the measure and morbidity and mortality and requested that CMS conduct more scientific tests on these measures. Therefore, this commenter believes that an iron stores measure should be a reporting measure only until further scientific evidence can be obtained. This commenter also expressed concern that a ''one size fits all'' system will lead to ''cherry-picking.''

Response: We thank the commenter for the input. We continue to analyze and develop measures that we believe best reflect quality in care. We also continue to monitor access to care issues and will adjust the ESRD QIP to address these issues in future rulemaking, as needed.

Comment: One commenter suggested that the ESRD QIP should focus more on mitigating patient non-compliance.

Response: We thank the commenter for the suggestion and will consider it as we further develop measures and policies for the ESRD QIP. We also note that there are mechanisms currently in place under the ESRD Conditions for Coverage that require that providers/facilities educate patients and promote appropriate patient care (*e.g.* 42 CFR 494.90(d)).

Comment: Some commenters urged CMS to require reporting of the ESRD QIP measures for all applicable patient populations, including both Medicare and non-Medicare populations, because providers will then have a better understanding of their overall performance.

Response: We intend to propose to require reporting of measure data on all ESRD patient populations after the launch of CROWNWeb. We have thus far not required reporting on all patient populations because our measures have been claims-based and have thus been restricted to Medicare patients. We adopted claims-based measures to reduce the burden of reporting for providers/facilities in the initial years of the program.

Comment: Some commenters requested that we clearly provide the criteria which we will use to select future measures and their weight and suggested that measures be ''phased-in.'' Commenters also suggested the CMS use criteria similar to that used by the NQF to adopt measures and employ the feedback of the Measure Applications Partnership in selecting measures appropriate for the program.

Response: We believe that we have outlined the criteria we used to select measures and their weights for the ESRD QIP, and we will continue to do so in the future. We will also consider NQF criteria, as well as feedback of other consensus-based entities, such as the Measures Application Partnership, as we select measures for the ESRD QIP. We also believe that, in some cases, it might be appropriate to ''phase-in'' measures, and we will continue to consider the best methods of introducing measures to the program.

Comment: One commenter suggested that CMS impose a method for ensuring that the data provided by facilities/providers is accurate.

Response: We currently have the ability to cross check the accuracy of some of the data reported via CROWNWeb. If a provider/facility reports information via CROWNWeb,

we can see if this information reflects that submitted for the ESRD QIP. We will continue to monitor provider/facility compliance with the ESRD QIP reporting requirements, and we will propose to implement a validation methodology in future rulemaking if we conclude that this would be appropriate for the program.

Comment: Some commenters encouraged CMS to implement a program or conduct demonstration programs for incentive bonus payments rather than payment reductions. These commenters suggested that these bonuses could be funded by the money saved in payment reductions under the ESRD QIP. Another commenter suggested that CMS make more of the payment amount contingent upon quality, and one commenter urged CMS to encourage innovation in the ESRD field.

Response: Section 1881(h) does not provide us with the authority to issue bonus payments to providers/facilities based on their performance under the ESRD QIP or to make reductions of more than 2.0 percent. We have conducted quality incentive ESRD demonstration projects in the past, and we intend to do so in the future; we will consider commenters' suggestions as we develop future projects. We believe that the ESRD QIP will encourage innovation in the ESRD field as providers/facilities seek to reach the highest quality standards through better and more efficient methods of care.

9. Process of Updating Measures

Section 1881(h)(2)(C) of the Act enables the Secretary to establish a process for updating the measures specified under subparagraph (A) in consultation with interested parties. Occasionally there are changes in science or new issues arise related to patient safety that may impact the measures that have been adopted through the rulemaking process. Therefore, for such cases where new information is available that specifically relates to patient safety concerns, we proposed that we would post a notice of the updates we intend to make to the measure(s) in the **Federal Register**. We proposed to specify in the notice a time period during which we would accept comments from the public. We also proposed to consider these comments and post a notice in the **Federal Register** finalizing any updates that we make to the measure(s). We stated our belief that this process will enable us to make necessary updates to the ESRD QIP measures to ensure that the measures are based on the best available scientific data.

Comment: Some commenters requested that CMS use the rulemaking process to update and/or modify measures.

Response: We believe that the measure updating process that the Secretary establishes under section 1881(h)(2)(B) can be a subregulatory process, as long as it is established in consultation with interested parties. We also believe that we have met this statutory requirement by proposing in rulemaking to implement a process to update measures. Generally, we will use the rulemaking process as often as possible to updated and/or modify measures. But the process we proposed to adopt balances our need, in some circumstances, to expeditiously update measures to address changes in science or issues related to patient safety while still allowing the public to express its critiques, concerns, and approval of such updates.

After considering the comments, we are finalizing our process for updating measures as proposed.

III. Ambulance Fee Schedule

A. Summary of Proposed Provisions

In the CY 2012 ESRD PPS proposed rule (76 FR 40535 through 40536), we proposed to revise the regulations at § 414.610 to conform with section 106 of the Medicare and Medicaid Extenders Act of 2010 (MMEA), and to incorporate a technical correction.

1. Section 106 of the Medicare and Medicaid Extenders Act of 2010 (MMEA)

a. Amendment to Section 1834(l)(13) of the Act

Section 146(a) of the Medicare Improvements for Patients and Providers Act of 2008 (Pub. L. 110–275) (MIPPA) amended section 1834(l)(13)(A) of the Act to specify that, effective for ground ambulance services furnished on or after July 1, 2008 and before January 1, 2010, the ambulance fee schedule amounts for ground ambulance services shall be increased as follows:

For covered ground ambulance transports which originate in a rural area or in a rural census tract of a metropolitan statistical area, the fee schedule amounts shall be increased by 3 percent.

For covered ground ambulance transports which do not originate in a rural area or in a rural census tract of a metropolitan statistical area, the fee schedule amounts shall be increased by 2 percent.

Sections 3105(a) and 10311(a) of the Affordable Care Act further amended section 1834(l)(13)(A) of the Act to extend the payment add-ons described above for an additional year, such that these add-ons also applied to covered ground ambulance transports furnished on or after January 1, 2010 and before January 1, 2011. In the CY 2011 physician fee schedule final rule (75 FR 73385 and 73386, 73625), we revised § 414.610(c)(1)(ii) to conform the regulations to this statutory requirement.

Subsequently, section 106(a) of the MMEA again amended section 1834(l)(13)(A) of the Act to extend the payment add-ons described above for an additional year, such that these add-ons also apply to covered ground ambulance transports furnished on or after January 1, 2011 and before January 1, 2012. In the CY 2012 ESRD PPS proposed rule (76 FR 40535), we proposed to revise § 414.610(c)(1)(ii) to conform the regulations to this statutory requirement. This statutory requirement is self-implementing. A plain reading of the statute requires only a ministerial application of the mandated rate increase, and does not require any substantive exercise of discretion on the part of the Secretary. For further information regarding the extension of these payment add-ons, please see Transmittal 706 (Change Request 6972) dated May 21, 2010 and the CMS Web site, *http://www.cms.gov/AmbulanceFeeSchedule/02_afspuf.asp.*

b. Amendment to Section 146(b)(1) of MIPPA

Section 146(b)(1) of the MIPPA amended the designation of rural areas for payment of air ambulance services. This section specified that any area that was designated as a rural area for purposes of making payments under the ambulance fee schedule for air ambulance services furnished on December 31, 2006, shall continue to be treated as a rural area for purposes of making payments under the ambulance fee schedule for air ambulance services furnished during the period July 1, 2008 through December 31, 2009.

Sections 3105(b) and 10311(b) of the Affordable Care Act amended section 146(b)(1) of MIPPA to extend this provision for an additional year, through December 31, 2010. In the CY 2011 physician fee schedule final rule (75 FR 73385 through 86, 73625 through 26), we revised § 414.610(h) to conform the regulations to this statutory requirement. Subsequently, section 106(b) of the MMEA amended section 146(b)(1) of MIPPA to extend this provision again through December 31, 2011. Therefore, in the CY 2012 ESRD PPS proposed rule (76 FR 40536), we

proposed to revise § 414.610(h) to conform the regulations to this statutory requirement. This statutory requirement is self-implementing. A plain reading of the statute requires only a ministerial application of a rural indicator, and does not require any substantive exercise of discretion on the part of the Secretary. Accordingly, for areas that were designated as rural on December 31, 2006, and were subsequently re-designated as urban, we have re-established the ''rural'' indicator on the ZIP Code file for air ambulance services through December 31, 2011.

For further information regarding the extension of this MIPPA provision, please see Transmittal 706 (Change Request 6972) dated May 21, 2010 and the CMS Web site, *http://www.cms.gov/AmbulanceFeeSchedule/02_afspuf.asp.*

c. Amendment to Section 1834(l)(12) of the Act

Section 414 of the Medicare Prescription Drug, Improvement and Modernization Act of 2003 (MMA) added paragraph (12) to section 1834(l) of the Act, which specified that in the case of ground ambulance services furnished on or after July 1, 2004, and before January 1, 2010, for which transportation originates in a qualified rural area (as described in the statute), the Secretary shall provide for a percent increase in the base rate of the fee schedule for such transports. The statute requires this percent increase to be based on the Secretary's estimate of the average cost per trip for such services (not taking into account mileage) in the lowest quartile of all rural county populations as compared to the average cost per trip for such services (not taking into account mileage) in the highest quartile of rural county populations. Using the methodology specified in the July 1, 2004 interim final rule (69 FR 40288), we determined that this percent increase was equal to 22.6 percent. As required by the MMA, this payment increase was applied to ground ambulance transports that originated in a ''qualified rural area''; that is, to transports that originated in a rural area included in those areas comprising the lowest 25th percentile of all rural populations arrayed by population density. For this purpose, rural areas included Goldsmith areas (a type of rural census tract).

Sections 3105(c) and 10311(c) of the Affordable Care Act amended section 1834(l)(12)(A) of the Act to extend this rural bonus for an additional year through December 31, 2010. In the CY 2011 physician fee schedule final rule (75 FR 73385 through 73386 and 73625), we revised § 414.610(c)(5)(ii) to conform the regulations to this statutory requirement.

Subsequently, section 106(c) of the MMEA again amended section 1834(l)(12)(A) of the Act to extend the rural bonus described above for an additional year, through December 31, 2011. Therefore, as directed by the MMEA, we are continuing to apply the rural bonus described above (in the same manner as in previous years), to ground ambulance services with dates of service on or after January 1, 2011 and before January 1, 2012 where transportation originates in a qualified rural area.

This rural bonus is sometimes referred to as the ''Super Rural Bonus'' and the qualified rural areas (also known as ''super rural'' areas) are identified during the claims adjudicative process via the use of a data field included on the CMS supplied ZIP Code File.

In the CY 2012 ESRD PPS proposed rule (76 FR 40536), we proposed to revise § 414.610(c)(5)(ii) to conform the regulations to the statutory requirement set forth at section 106(c) of the MMEA. This statutory requirement is self-implementing. The statute requires a one-year extension of the rural bonus (which was previously established by the Secretary), and does not require any substantive exercise of discretion on the part of the Secretary. For further information regarding the extension of this rural bonus, please see Transmittal 706 (Change Request 6972) dated May 21, 2010 and the CMS Web site, *http://www.cms.gov/AmbulanceFeeSchedule/02_afspuf.asp.*

2. Technical Correction

In the CY 2011 physician fee schedule final rule (75 FR 73386, 73625), CMS made technical changes to reformat § 414.610(c)(1). However, in making these revisions, language related to the ambulance fee schedule conversion factor (CF) was inadvertently left out of this regulation. Specifically, the following sentence was inadvertently omitted from revised § 414.610(c)(l): ''The CF is multiplied by the applicable RVUs for each level of service to produce a service-level base rate.'' Prior to the changes made in the CY 2011 physician fee schedule final rule, this was the first sentence under § 414.610(c)(l)(i). We did not intend to delete this language in making the CY 2011 formatting changes. Therefore, in the CY 2012 ESRD PPS proposed rule (76 FR 40536), we proposed to revise § 414.610(c)(1) to reinstate this sentence which was inadvertently deleted in the CY 2011 physician fee schedule final rule.

B. Response to Comments

We did not receive any comments regarding the proposed revisions to § 414.610 discussed above. (We received one ambulance-related comment during the comment period which was beyond the scope of the proposed rule, and thus, it is not addressed in the final rule). Therefore, we are finalizing the revisions to § 414.610 as proposed.

IV. Durable Medical Equipment and Supplies

A. Background for Durable Medical Equipment (DME) and Supplies

Title XVIII of the Social Security Act (the Act) governs the administration of the Medicare Program. The statute provides coverage for broad categories of benefits, including inpatient and outpatient hospital care, skilled nursing facility care, home health care, physician services, and durable medical equipment (DME). DME is covered by Medicare based, in part, upon section 1832(a) of the Act, which describes the scope of benefits under the supplementary medical insurance program (Medicare Part B). Section 1861(s)(6) of the Act defines ''medical and other health services'' to include DME as a separate benefit for which payment is authorized by section 1832 of the Act. Section 1861(m)(5) of the Act specifically includes DME in the definition of the term ''home health services.''

In accordance with section 1861(n) of the Act, the term ''durable medical equipment'' includes iron lungs, oxygen tents, hospital beds, and wheelchairs used in the patient's home whether furnished on a rental basis or purchased. The patient's home includes an institution used as his or her home other than an institution that meets the requirements of section 1861(e)(1) or section 1819(a)(1) of the Act. Besides being subject to this provision, the coverage of DME must also meet the requirements of section 1862(a)(1)(A) of the Act, which in general excludes from payment any items or services that are not reasonable and necessary for the diagnosis or treatment of illness or injury or to improve the functioning of a malformed body member, and section 1862(a)(6) of the Act, which (except for certain specified exceptions) precludes payment for personal comfort items.

Section 1834(a) of the Act, as added by section 4062 of the Omnibus Budget Reconciliation Act of 1987 (OBRA 87), Public Law 100–203, sets forth the payment rules for most DME furnished on or after January 1, 1989. Historically, the Medicare payment amount for a DME item is generally equal to 80

percent of the lesser of the actual charge or the fee schedule amount for the item, less any unmet Part B deductible. The beneficiary coinsurance for such items is generally equal to 20 percent of the lesser of the actual charge or the fee schedule amount for the item once the deductible is met. The fee schedule amounts are generally calculated using average allowed charges from a base period and then updated by annual update factors. Sections 1834(a)(2) through (a)(7) of the Act set forth six separate classes of DME and separate payment rules for each class. The six classes of items are: inexpensive and other routinely purchased DME; items requiring frequent and substantial servicing; customized items; oxygen and oxygen equipment; other covered items (other than DME); and capped rental items. For DME in general, § 414.210(f) specifies that payment can be made for replacement of DME that is lost, stolen, irreparably damaged, or has been in continuous use for the equipment's reasonable useful lifetime (RUL). In general, the RUL for DME is established as 5 years. Computation of the RUL is based on when the equipment is delivered to the beneficiary, not the age of the equipment. The 5-year standard is set forth in section 1834(a)(7)(C)(iii) of the Act for capped rental DME, but was applied to all DME through the regulations. The RUL is used to determine how often it is reasonable to pay for replacement of DME under the program and is not specifically set forth as a minimum lifetime standard. Therefore, we are using our discretion to establish a rule regarding how long equipment must withstand repeated use to be considered DME.

Payment for inexpensive or routinely purchased DME is made on a purchase or rental basis, with total payments being limited to the purchase fee schedule amount for the item. The regulation at 42 CFR 414.220 provides that inexpensive DME have an average purchase price of $150 or less and routinely purchased DME are items that have historically been acquired on a purchase basis 75 percent of the time or more. Accessories used with DME are also included in the inexpensive or routinely purchased DME class. Payment is generally made on a monthly rental basis with no cap on the number of rental payments made for items such as ventilators that require frequent and substantial servicing. Payment for items meeting the definition of customized DME set forth at § 414.224 is made on a lump sum purchase basis in an amount established based on the Medicare claims processing contractor's individual consideration and judgment of a reasonable payment amount for each item. Payment for oxygen equipment set forth at § 414.226 is made on a monthly basis for up to 36 months of continuous use. The supplier retains ownership of the oxygen equipment following the 36-month cap, but must continue to furnish the equipment for the remainder of the equipment's 5-year RUL, at which point the beneficiary can elect to obtain new equipment. Payment for capped rental items set forth at § 414.229(f) is made on a monthly rental basis for up to 13 months of continuous use. The supplier must transfer title to the equipment to the beneficiary on the first day following the 13th month of continuous use.

In establishing regulations for the purpose of implementing the payment rules mandated by OBRA 87, 42 CFR 414.202 sets forth the basic definition of DME that was originally established and elaborated upon in program instructions discussed below. Section 414.202 defines DME as equipment furnished by a supplier or a home health agency that—

- Can withstand repeated use;
- Is primarily and customarily used to serve a medical purpose;
- Generally is not useful to an individual in the absence of an illness or injury; and
- Is appropriate for use in the home.

The benefit for DME as it was initially defined at section 1861(s)(6) of the Act was a benefit for ''rental of durable medical equipment.'' The owner of rented equipment is paid for the use of the equipment. When the equipment is no longer needed, it is returned to the owner and can then be rented by another customer. Items that are disposable cannot be rented and items that last for short periods of time are not likely to be items that would be rented. The Act was amended by section 16 of the Medicare-Medicaid Anti-Fraud and Abuse Amendments of 1977 (Pub. L. 95–142) to allow for purchase of DME in cases where purchase is less costly or more practical than rental. In 1978, program instructions were added to the Medicare Part B Carriers Manual (HCFA–Pub. 14–3, Rev. 3–669) to further define DME and durability of an item, that is, when an item is considered durable. The instructions are now included in section 110.1 of chapter 15 of the Medicare Benefit Policy Manual (CMS–Pub. 100–02). In specifying which items satisfy the durability criteria, these program instructions provide that ''an item is considered durable if it can withstand repeated use, that is, the type of item which could normally be rented'' and excludes items that are ''of an expendable nature.'' The instructions do not specify exactly how long an item must last to be considered a durable item that would normally be rented as opposed to a disposable item or an item that would not normally be rented.

CMS has provided program instructions for coverage of supplies and accessories at Section 110.3 in Chapter 15 of the Medicare Benefit Policy Manual. The instructions provide that payment may be made for supplies that are necessary for the effective use of DME, such as lancets used to draw blood for use with a home blood glucose monitor. The lancet itself is disposable and would not be covered as DME, but it is a covered item that falls under the general DME benefit because it is necessary for the effective use of DME—the home blood glucose monitor. Supplies necessary for the effective use of DME also include oxygen and those drugs and biologicals which must be inserted directly into the equipment for the effective use of DME.

The Healthcare Common Procedure Coding System (HCPCS) is a standardized coding system used to process claims submitted to Medicare, Medicaid, and other health insurance programs by providers, physicians, and other suppliers. The HCPCS Code Set is divided into two principal subsystems, referred to as level I and level II of the HCPCS:

Level I of the HCPCS codes is comprised of Current Procedural Terminology (CPT) codes, which are copyrighted by the American Medical Association (AMA), and are used primarily to identify medical services and procedures furnished by physicians and other healthcare professionals that are billed to public or private health insurance programs.

Level II of HCPCS is a standardized coding system used primarily to identify products and supplies that are not included in the CPT codes, such as DME, orthotics, prosthetics, and supplies when used outside a physician's office. Assignment of a HCPCS code is not a coverage determination and does not imply that any payer will cover the items in the code category. In October 2003, the Secretary delegated authority under the Health Insurance and Portability Act of 1996 to CMS to maintain and distribute HCPCS Level II codes.

B. Current Issues

The regulation and program instructions do not lend guidance regarding the specific period of time that equipment must function in order

to be considered ''durable.'' In addition, the regulation does not provide specific guidance or criteria regarding how to determine if new devices consisting of a system of durable and non durable components that together serve a medical purpose fall within the DME benefit category. Therefore, we believe it is necessary to revise the regulation at this time to include a definition of DME that uses more specific language to define the term ''durable'' for the purpose of determining whether equipment is DME. The issue of linking durability to the lifetime of equipment and where to draw the line has come to our attention in light of the recent technology and engineering in the field of medical devices and equipment. Establishing a minimum lifetime requirement (MLR) would help facilitate the benefit category determination process for items that clearly last longer or shorter than the minimum lifetime threshold.

In cases where it is not clear that the equipment can function for the specified minimum period of time, we proposed that reviewing additional information and evidence consistent with the present benefit category determination process would be necessary to determine the expected life of the equipment. CMS and CMS contractors would base the decision on various sources of information including but not limited to the HCPCS request form, pre-market clearance documents from the Food and Drug Administration (FDA), product warranty documents, product Web site, product marketing materials, product user guides, product operating manuals, consumer product reviews, subject matter expert reviews, industry product standards data, and product data created as a result of clinical studies or standardized test results. A minimum lifetime standard for DME may also help facilitate the HCPCS process. The current application form used to request new HCPCS codes for items includes the question regarding whether equipment is durable and, if so, instructs the applicant to provide an explanation of how the item can withstand repeated use. We have received requests from several entities including DME stakeholders for additional clarification regarding the durability standard for DME. Comments from some of these entities indicate that there is limited direction on what is required for an item to be considered ''durable'' in the current regulation. Additional clarification of the term ''durable'' would be helpful to industry stakeholders such as manufacturers in anticipating how their products would be treated under coding classification and benefit category determinations.

C. Overview of the Provisions of the Proposed Durable Medical Equipment (DME) Regulation

On July 8, 2011, we published in the **Federal Register** a proposed rule entitled, ''Medicare Program; Changes to the End-Stage Renal Disease Prospective Payment System for CY 2012, End-Stage Renal Disease Quality Incentive Program for PY 2013 and PY 2014; Ambulance Fee Schedule; and Durable Medical Equipment'' (76 FR 40498). In that rule, we proposed revising the definition of DME by adding a 3-year MLR that must be met by an item or device in order to be considered durable for the purpose of classifying the item under the Medicare benefit category for DME.

D. Summary of the Proposed Provisions and Responses to Comments on the Definition of Durable Medical Equipment (DME) 3-Year Minimum Lifetime Requirement (MLR)

We received approximately 35 comments on our proposal. Interested parties that submitted comments included several medical device and equipment manufacturers, a healthcare provider, RESNA (Rehabilitation Assistive Technology Standards Board) and national organizations for HCPCS coding, disability, medical technology innovators and beneficiaries. In this final rule we provide a summary of each proposed provision, a summary of the public comments received, and our responses to them.

We proposed making changes to the definition of DME at 42 CFR 414.202 in order to clarify the meaning of the term ''durable'' in order to reflect our current interpretation of the statutory provisions discussed above consistent with the DME payment provisions. Specifically, we proposed establishing a 3-year MLR that equipment will be expected to meet in order to be considered DME. Based upon the statute and current regulations, equipment would not qualify as DME if it could not withstand repeated use. Although the capacity for reuse is in itself a fundamental characteristic of durability, it is not clear how many months or years an item must withstand repeated use in order to be considered durable.

The Merriam Webster dictionary defines ''durable'' as the ability to exist for a long time without significant deterioration. The United States Department of Commerce uses a durability standard of 3 years for consumer durable goods for National Income and Accounts estimates.[19] Furthermore, economics dictionaries,[20] various encyclopedias,[21] and economics textbooks [22] define durable goods as goods that are expected to last longer than 3 years.

In addition, information gathered from various sources such as Rehabilitative Engineering and Assistive Technology Society of North America (RESNA),[23] product catalogs, product warranty documents, and consumer product reviews indicate that conventional DME items such as wheelchairs, hospital beds, and ventilators specified in section 1861(n) of the Act typically have a useful life of 3 or more years before they need to be replaced or need major repairs. Therefore, we proposed establishing a 3-year MLR for items to meet the durability criterion for DME.

The 3-year MLR was proposed to increase the clarity of the current definition and give regulatory weight to a reasonable benchmark for a minimum period of durability or repeated use that an item would be expected to meet in order for the equipment to be considered DME. In addition, the rule was proposed to provide clear guidance to CMS and other stakeholders for making consistent informal benefit category determinations and national coverage determinations for DME. It was also proposed to assist manufacturers in designing and developing new medical equipment to have a better understanding of how long an item must be able to withstand repeated use in order to be considered DME for Medicare purposes. It is important to note that the 3-year MLR does not replace the RUL standard established by section 1834(a)(7)(C) of the Act for payment purposes. The RUL rules are used to determine how often payment can be made for replacement items and is not a MLR for DME. Although the proposed 3-year MLR is a requirement for determining whether an item will be considered durable, it is not an indication of the typical or average lifespan of DME, which in many cases may last for much longer than 3 years.

[19] The NIPA Handbook (Concepts and Methods of the U.S National Income and Product Accounts, Chapter 5–Personal Care Expenditures. The handbook is available at *http://www.bea.gov/national/pdf/NIPAhandbookch5.pdf.*

[20] The McGraw Hill Dictionary of Modern Economics by Douglas Greenwald & Associates, Economics dictionary by Donald Moffat, Dictionary of Business and Economics by Christine Ammer and Dean Ammer.

[21] Encyclopedia of Business, Britannica Encyclopedia and Gale Encyclopedia.

[22] A Lexicon of Economics by Kenyon A. Knopf.

[23] *http://resna.org/.*

1. Application of the 3-Year MLR to Items Currently Covered as DME and to Supplies and Accessories of Covered DME

We proposed that the 3-year MLR be prospective only and not apply to equipment classified as DME before the proposed rule is implemented. Based on our experience with the program, we believe that most items that are currently classified as DME function for 3 or more years. We also proposed not to apply the standard to supplies and accessories used with DME that are paid for under the DME benefit or blood glucose monitors and blood testing strips to allow for continued coverage of such items, supplies and accessories that are necessary for the effective use of DME. In the proposed rule we also solicited public comments on methods for determining when multi-component devices are durable. We requested comments only and did not propose any regulation changes regarding this issue. The comments received on this issue will be taken into consideration in determining whether changes on this issue should be proposed in future rulemaking.

Comment: Several commenters acknowledged that it is necessary to establish a MLR for use in determining if medical equipment is durable for purposes of Medicare payment.

Response: We agree and thank the commenters for their support and feedback that it is necessary to establish a MLR for use in determining if medical equipment is durable.

Comment: Several commenters argued that the proposed rule is unnecessary and the current criteria for determining whether equipment is durable are clear, with one commenter stating that Medicare payment rules and manufacturer warranties already provide beneficiaries with appropriate protection. Two commenters suggested that CMS should publish a MLR for DME through subregulatory guidance.

Response: We appreciate the comments; however, we believe there is a need to make changes to the definition of DME at 42 CFR 414.202 to clarify the meaning of the term ''durable'' to reflect our current interpretation of the statute, consistent with the DME payment rules previously discussed. Manufacturers of new technology medical devices have specifically asked how long an item must withstand repeated use in order to be considered durable equipment, and therefore our objective is to establish a clear expected MLR for equipment in order to facilitate consistent benefit category determinations. We also wanted to publish the 3-year MLR through rule making rather than providing this clarification through Manual provisions and program instructions to provide an opportunity for input given that the definition of DME is set forth in regulations.

Comment: Several commenters stated that the proposed 3-year MLR was arbitrary and inappropriate.

Response: We disagree. As discussed previously, the 3-year MLR for durability reflects the standard used by various Federal agencies to define durable consumer goods such as cars, refrigerators, air conditioning units, as well as hospital beds, walkers, crutches, scooters, wheelchairs, oxygen equipment, *etc.* Federal agencies such as the Department of Commerce and the Department of Labor have been applying this standard to durable goods including DME. Furthermore, the 3-year durability standard is widely supported in the industry. See for example, Simon Kuznet's ''National Income and Capital Formation'' published by the National Bureau of Economic Research (1937), defining durable commodities as those whose period of utilization is more than 3 years, and references in a wide variety of more recent literature, textbooks, dictionaries and encyclopedias, which specifically reference a 3-year period of time in defining or classifying items as durable.[24] We see no reason why a different standard for durability should be used for the equipment covered as DME under the Medicare program. Therefore, we believe it is reasonable for the Department of Health and Human Services to apply this 3-year standard to DME.

Additionally, in light of the statutory 5-year RUL requirement and the DME payment rules, which support the fact that equipment paid for under the DME benefit is intended to be used over many years, we believe that it is reasonable to require that such equipment be functional or capable of withstanding repeated use for at least 3 years. As we discussed in our equipment replacement payment rule, we expect that equipment furnished by suppliers will function for a reasonable period of time. See 71 FR 65884, 65920 (Nov. 9, 2006). We believe that a 3-year MLR would provide sufficient flexibility to cover new technology items that could be considered durable, but that may not last for 5 years before having to be replaced. As noted previously, the Congress, in drafting section 4152(c)(2)(F) of the Omnibus Budget Reconciliation Act of 1990 (Pub. L. 101–508), selected 5 years as the default RUL for capped rental DME. The RUL was specified to be 5 years for each capped rental DME item unless prior experience in making payment for the item resulted in the establishment of an alternative RUL for the item. As part of the interim final rule (57 FR 57675) implementing this provision on December 7, 1992, we extended the RUL provision to other items of DME and specified that, in the absence of program instructions, the carrier may determine that the RUL of equipment is greater than, but not less than, 5 years. See 57 FR 57675, 57686 (Dec. 7, 1992). Furthermore, such standards are consistent with the DME payment methodology, mandated by Section 4062(b) of the Omnibus Budget Reconciliation Act of 1987, Public Law 100–203, and section 5101(b) of the Deficit Reduction Act of 2005, Public Law 109–171, which authorized the changes in the payment for oxygen equipment and mandated a cap on payments for all rented equipment other than a few frequently serviced items such as ventilators. The following are some examples of changes in payment rules that were made to avoid excessive payments for durable items needed and used by patients for extended periods of time lasting for several years.

- The rental payments for inexpensive equipment such as canes and crutches that the beneficiary elects to rent rather than purchase is capped at the purchase fee for the equipment.
- The payment for oxygen equipment is currently capped at 3 years and suppliers are mandated to continue furnishing the equipment after the cap for up to 2 additional years.
- Title to other expensive equipment such as wheelchairs and hospital beds is transferred to the beneficiary after 13 continuous rental payments.

The 5-year RUL and payment rules apply to durable equipment that can be used for many years. See 71 FR at 65920, (regarding the expectation that suppliers furnish a quality item that will last over a 5-year period). CMS continues to expect that in light of these

[24] The NIPA Handbook (Concepts and Methods of the U.S National Income and Product Accounts, Chapter 5—Personal Care Expenditures,The handbook is available at *http://www.bea.gov/national/pdf/NIPAhandbookch5.pdf*, U.S. Department of Labor/Bureau of Labor Statistics. *http://www.bls.gov/ppi/ppiwholesale.htm*, The McGraw Hill Dictionary of Modern Economics by Douglas Greenwald & Associates, Economics dictionary by Donald Moffat, Dictionary of Business and Economics by Christine Ammer and Dean Ammer, Encyclopedia of Business, Britannica Encyclopedia and Gale Encyclopedia, Lexicon of Economics by Kenyon A. Knopf, Fiscal Policy and Business Cycles by Alvin H. Hansen, Economics: Principles in Action by Steven M. Sheffrin, Durability of Output and Expected Stock Returns by Joao F. Gomes, Leonid Kogan, & Motohiro Yogo, Economics Fluctuations and Forecasting by Vincent Su, Macroeconomics by Roger A. Arnold, and National Income and Capital Formation by Simon Kuznet.

RUL provisions, equipment covered under the DME benefit should be capable of withstanding repeated use for a minimum time period. Consistent with these standards, we believe that a 3-year durability threshold is reasonable, especially given our history with the program and the vast majority of categories of DME that already last for at least a 3-year period.

Comment: One commenter suggested that CMS should refrain from adding a 3-year MLR and instead define what is meant by repeated use.

Response: We appreciate the comment; however, we believe it is necessary to establish a reasonable expectation regarding durability by adding a 3-year MLR to the definition of DME. Manufacturers of new technology medical devices have specifically asked how long an item must withstand repeated use in order to be considered durable equipment, and therefore we believe it is necessary to establish a clear expected MLR for equipment in order to assure payment for quality items of DME, and facilitate consistent benefit category and national coverage determinations.

Comment: One commenter suggested establishing 6 months as the MLR for DME.

Response: We appreciate the comment, however, as discussed earlier, 3 years is a standard used by Federal agencies and the industry for classifying durable goods, which include equipment typically covered under the DME benefit. Therefore, we believe that adopting a standard of 3 years for purposes of the Medicare program would be reasonable and assure payment for equipment consistent with industry standards. Furthermore, as noted previously, in light of the statutory 5-year RUL requirement we do not believe it is reasonable to establish a 6-month standard. As discussed earlier, consistent with the statute, the payment rules support the fact that equipment included in the DME benefit is intended to be used over many years. For all the reasons stated above, we do not believe that a 6-month MLR for DME is a reasonable option.

Comment: Several commenters added that using a universal 3-year MLR for all types of products is inflexible and nonfeasible. One commentator indicated that engineering a device for a guaranteed lifetime is virtually impossible.

Response: We do not believe that establishing an expected 3-year MLR is inflexible and nonfeasible. As noted earlier, the regulations already provide a requirement for repeated use and a 5-year RUL standard. We proposed to establish an expected 3-year threshold standard consistent with these requirements and other Federal agencies and industry standards. In addition, while we understand that exact periods of longevity will vary, the purpose of the rule is to establish a MLR in order for the equipment to be considered durable for purposes of Medicare payment determinations. The 3-year MLR is intended to be a minimum threshold that equipment will be expected to meet in order to be considered durable under Medicare regulations We expect that equipment furnished under the benefit will be quality items that will function consistent with industry standards for a 3 year threshold period.

Furthermore, a vast majority of the categories of DME last for 3 years or longer. Therefore, consistent with these RUL and payment provisions, we believe that a 3-year MLR would continue to provide the flexibility to cover new technology items.

We also appreciate the comment that engineering a device for a guaranteed lifetime is virtually impossible; however, given the industry standards, we expect that equipment should function for a minimum threshold period of time. Based on our experience in making benefit category determinations and analyzing the types of equipment that are covered under the DME benefit over the years; we believe that the 3-year MLR is a reasonable threshold standard for the types of equipment paid for under the DME benefit. Therefore, we believe that for purposes of Medicare payment, it is reasonable to establish a threshold of 3 years which is consistent with other Federal agencies and industry standards.

Comment: Two commenters suggested that the MLR should be based upon a specific code set, natural therapeutic requirements, and normal length of needs and medical necessity as dictated by the prescriber, rather than a universally applied standard.

Response: We thank the commenters for their input that the MLR should be based upon a specific code set, natural therapeutic requirements, and normal length of needs and medical necessity as dictated by the prescriber, rather than a universally applied standard. However, we have established a standard applicable to the Medicare benefit that is designed to be consistent with criteria established in the statute and payment provisions. We have interpreted the benefit consistent with the standards in the statute, Medicare payment regulations, industry standards, and Federal agency standards. Furthermore, based on our experience in making benefit category determinations and analyzing the types of equipment that are covered under the DME benefit over the years, the majority of the categories of DME items already last for 3 years or longer. As noted earlier, we already expect items will function consistent with the 5-year RUL and DME payment rules. For all the reasons discussed, we believe that it is appropriate to apply the 3-year MLR as a threshold for defining durability for equipment under the program.

Comment: One commenter recommended that CMS create a rebuttable presumption that a DME item should last for 3 years but provide that a manufacturer can rebut that presumption with convincing evidence that the 3-year MLR should not be applied automatically in a particular instance.

Response: We disagree with the commenter's recommendation for creating a rebuttable presumption that a DME item should last for 3 years. As stated earlier, manufacturers of new technology medical devices have specifically asked how long an item must withstand repeated use in order to be considered durable equipment, and therefore our objective is to establish an expected MLR for equipment in order to assure payment for quality items and facilitate consistent benefit category and national coverage determinations. The issue of linking durability to the lifetime of equipment and where to draw the line has come to our attention in light of the recent technology and engineering in the field of medical devices and equipment. We are establishing a MLR for DME to clarify our expectation regarding durability. An option to rebut the 3-year MLR in some instances would undermine this objective.

Comment: Several commenters recommended that CMS collaborate with industry stakeholders to develop additional requirements related to determining durability of items.

Response: We appreciate the comment. The current processes including Benefit Category Determination (BCD), National Coverage Determination (NCD), Local Coverage Determinations (LCD), and Healthcare Common Procedure Coding System (HCPCS) include meetings with manufacturers in addition to the public where we seek input from the stakeholders. We will continue to receive input from stakeholders consistent with the BCD and NCD process when determining whether an item is durable. See 68 FR 55634, (September 26, 2003); and *http://www.*

cms.gov/DeterminationProcess/Downloads/FR09262003.pdf.

See also, information on the HCPCS Level II coding process at: *http://www.cms.gov/MedHCPCSGenInfo/Downloads/2013_HCPCS_Application.pdf. http://www.cms.gov/MedHCPCSGenInfo/08_HCPCSPublicMeetings.asp#TopOfPage.*

Comment: Several commenters stated that the rule would create burdensome testing requirements to verify the 3-year MLR for a device. One commenter stated that testing standards cannot validate the lifetime of a device and it is unclear how a manufacturer would prove an item meets the 3-year MLR. One commenter noted that added testing for durability will increase the cost for manufacturers in addition to designing new 3-year versions of DME products that currently function for a shorter period of time.

Response: We did not intend to create burdensome testing requirements. As noted previously, our objective is to establish a reasonable minimum lifetime standard for DME for purposes of Medicare payment, consistent with other Federal agencies and industry practice. As stated in the proposed regulation, in cases where it is not clear that the equipment can function for the specified minimum period of time, we will review information and evidence consistent with the current benefit category determination process to determine the expected life of the equipment. As discussed previously, the benefit category determination process typically involves reviewing information from various sources including but not limited to information related to Food and Drug Administration (FDA) pre-market clearance, product manuals, operating guides, warranty documents, and standardized test results. The NCD process is available at *http://www.cms.gov/DeterminationProcess/Downloads/FR09262003.pdf*. See also, 68 FR 55638 (September 23, 2003).

Additionally, we routinely collect information regarding durability of new products as part of the HCPCS editorial process in order to identify categories of new DME subject to the procedures established in accordance with the mandate of section 531(b) of the Medicare, Medicaid and SCHIP Benefit Improvement and Protection Act of 2000 (BIPA 2000), Public Law 106–554. Based on our experience with the program, this information has been readily available from the manufacturers of these items and other entities submitting requests for changes to the HCPCS. Information on the HCPCS Level II coding process is available at: *http://www.cms.gov/MedHCPCSGenInfo/Downloads/2013_HCPCS_Application.pdf* and *http://www.cms.gov/MedHCPCSGenInfo/08_HCPCSPublicMeetings.asp#TopOfPage.*

Furthermore, the 3-year MLR will be prospective and will not be applied on a retroactive basis; it will be used for making benefit category decisions for new items. As noted previously, we believe that a vast majority of the categories of DME already last for at least 3 years, consistent with the RUL and payment provisions. The 3-year MLR is designed to be a minimum threshold for determining if an item is considered durable and we expect that new DME products in general will continue to meet or exceed this MLR. For reasons discussed above, we have no reason to believe that the 3-year MLR will increase the cost for manufacturers.

Comment: One commenter supported the grandfathering provision.

Response: We thank the commenter for the input and support.

Comment: Several commenters voiced concerns that the new requirement will stifle innovation and prevent the entry of new devices in the market. Several commenters stated that the grandfathering provision would create disparities among manufacturers and be disadvantageous to new product manufacturers and advantageous to existing DME product manufacturers. Some commenters stated that applying the rule prospectively and not applying the rule to items currently classified as DME makes the rule unclear and nontransparent.

Response: We did not intend to create disparities. As noted in the proposed regulation and a response to an earlier comment, we are making changes to the definition of DME to reflect our current interpretation of the statute consistent with the RUL and general DME payment provisions. The 3-year MLR is designed to be applied on a prospective basis and would represent a minimum threshold for determinations regarding equipment durability. As noted earlier, in light of the statutory 5-year RUL requirement and DME payment rules which support the fact that DME items should be able to withstand repeated use for many years; we believe that it is reasonable to require that equipment be capable of withstanding repeated use consistent with the industry 3 year standard. We believe that a 3-year MLR would provide the flexibility to cover new technology items that can be considered durable, but may not last for 5 years before having to be replaced.

We also believe that the 3-year MLR is reasonable given the general payment and RUL requirements. As discussed previously, the 5-year RUL is well established since 1992 and we have not found that the RUL standard has stifled innovation or prevented entry of new devices in the market. Therefore, in light of these provisions, we believe that 3 years is a reasonable threshold consistent with Medicare payment rules, industry standards and Federal agency standards. However, while we expect that equipment will meet our 3 year standard, we will continue to monitor the issue and undertake additional rulemaking if necessary.

Comment: One commenter requested clarification on the applicability and scope of the rule. Some commenters requested clarification on how the MLR would be applied to new generations of products that are currently classified as DME or how the standard would apply to an existing DME item that is modified in the future to improve functionality. One commenter recommended that the new rule not apply if an existing DME item is just upgraded. Some commenters questioned if the rule would be applicable to only products that apply for a new HCPCS code. Some commenters questioned if the new rule would apply to items that are billed using existing HCPCS codes or any item that fits into an existing product category or existing HCPCS codes and how miscellaneous codes would be handled.

Response: We will apply the revised definition for DME on a prospective basis. That is, we will not redetermine for payment as DME any product that is currently paid under the DME benefit. The revised definition would only apply to new products. To the extent that a modified product is not a new product (including an item that has been upgraded), the 3-year MLR will not be applicable. We will consider issuing additional guidance to provide further clarification if necessary.

Comment: One commenter questioned how CMS would validate that a device lasts fewer than 3 years. One commenter requested clarification on whether the MLR would be calculated from the date the manufacturer sells the item to the provider or date first provided to the patient.

Response: We are not proposing a new process and as noted previously, we will continue to follow the current benefit category determination process to determine whether a product meets the standards for DME set forth in the rule. As noted earlier, the expected life of an item will be estimated based upon information gathered from various sources consistent with the current benefit category determination process

and will be calculated based upon use, not when it is sold to a supplier.

Comment: One commenter voiced concern that there would be no process for appealing decisions that items are not durable.

Response: A manufacturer or supplier can request a reconsideration of an informal BCD determination or a reconsideration of a formal NCD consistent with the statute. See (68FR 55638, September 26, 2003) available at: *http://www.cms.gov/DeterminationProcess/Downloads/FR09262003.pdf*.

Comment: One commenter stated that the current testing standards for certain types of equipment that are currently classified as DME require a much shorter lifespan than 3 years.

Response: We appreciate the comment; however, as stated previously, the 3-year MLR would not apply to any items currently classified as DME. In addition, the 3-year MLR would not apply to blood testing strips, accessories and supplies used with DME that are necessary for the effective use of the DME item. For example: A blood glucose monitor and lancets used to obtain blood samples for use in a blood glucose monitor are covered under the DME benefit. The blood glucose monitor is covered as DME and the lancets are covered as supplies necessary for the effective use of the DME item.

After reviewing all the comments, we are finalizing the regulation to revise the definition of durable medical equipment at § 414.202 by adding a 3-year MLR that must be met by an item or device in order to be considered durable for the purpose of classifying the item under the Medicare benefit category for DME. This will be effective with respect to items classified as DME after January 1, 2012.

2. Application of the 3-Year MLR to Multi-Component Devices

In some cases, a device may be a system consisting of durable and non-durable components that together serve a medical purpose. Currently, a multi-component device consisting of durable and non-durable components is considered non-durable if the component that performs the medically necessary function of the device is non-durable, even if other components that are part of the device are durable. Therefore, if the proposed regulation to establish a minimum 3-year MLR for DME is applied to these devices, the component(s) of a multi-component device that performs the medically necessary function of the device would need to meet the 3-year MLR. Although, we did not propose to change our policy with regard to these types of systems at this point, we solicited public comments on this topic. Specifically, we solicited public comments on various ways we might consider applying the 3-year MLR to multi-component devices consisting of both durable and non-durable components. Various options might include the following:

1. Apply the 3-year MLR to the component(s) that performs the entire medically necessary function of the device.

2. Apply the 3-year MLR to the component(s) that performs a vital part of the medically necessary function of the device.

3. Consider a device/system to be durable only if the cost of the durable component(s) over a period of time (for example, 5 years) makes up greater than 50 percent of the overall cost of the device/system over the same period.

In the proposed rule we solicited public comments on the application of various options to multi-component devices to determine whether the device is durable. We received approximately 20 comments pertaining to the topic of applying the 3-year MLR to multi-component devices consisting of both durable and non-durable components. One commenter disagreed with option one because this option requires that the whole device meet the MLR as many devices will not be able to function without even minor elements, such as accessories and supplies. This commenter noted that for the option two, it is not clear what is meant by ''performs a vital part of the medically necessary function.'' This commenter further stated that for option three it is unclear what is meant by ''cost.'' The commenter noted that option 3 could be considered if the Medicare reimbursement rate for the durable and non-durable components is used as the ''cost'' for calculating the ratio of the cost for durable and non-durable components. One commenter supported the 3-year MLR and endorsed option 2 which applies the 3-year MLR to the component(s) that performs a vital part of the medically necessary function for multi-component devices.

Several commenters endorsed the coverage of a specific multi-component device for Medicare beneficiaries. One commenter stated that medical equipment comprised of durable and non-durable components should be considered durable if any one component of the equipment is able to meet the MLR as determined in the HCPCS application process and CMS should evaluate the medically necessary function performed by the device in its totality rather than basing durability on the component that performs the medically necessary function of the device.

We requested comments only and did not propose any regulation changes. Therefore, the comments received will be taken into consideration for future proposed rulemaking.

V. Interim Final Rule Regarding the Competitive Acquisition Program for Certain Durable Medical Equipment, Prosthetics, Orthotics and Supplies (DMEPOS)

A. Background

1. Legislative and Regulatory History of the DMEPOS Competitive Bidding Program

Section 1847 of the Act, as amended by section 302(b)(1) of the Medicare Prescription Drug, Improvement, and Modernization Act of 2003 (MMA)(Pub. L. 108–173), requires the Secretary to establish and implement a Medicare DMEPOS Competitive Acquisition Program (''competitive bidding program'' or ''program''). Under the competitive bidding program, Medicare sets payment amounts for selected DMEPOS items and services furnished to beneficiaries in competitive bidding areas (CBAs) based on bids submitted by qualified suppliers and accepted by Medicare. For competitively bid items, the payment amounts, referred to as ''single payment amounts'', replace the fee schedule payment methodology set forth in section 1834 of the Social Security Act (the Act) and 42 CFR part 414, Subpart D of our regulations.

The competitive bidding program guarantees savings to both the Medicare program and beneficiaries under the program. The program also includes provisions to ensure beneficiary access to quality DMEPOS items and services. Section 1847 of the Act limits participation in the program to suppliers who have met applicable quality and financial standards and requires the Secretary to maintain beneficiary access to multiple suppliers.

On May 1, 2006, we issued a proposed rule (72 FR 25654) in the **Federal Register** that would implement the competitive bidding program for certain DMEPOS items and services and solicited public comment on our proposals. On April 10, 2007, we issued a final rule (72 FR 17992) in the **Federal Register** addressing the comments on the proposed rule and establishing the regulatory framework for the Medicare DMEPOS competitive bidding program in accordance with section 1847 of the Act.

Consistent with the requirements of section 1847 of the Act and the

competitive bidding regulations, we began implementing the program by conducting the first Round of competition in 2007 in 10 of the largest metropolitan statistical areas (MSAs) for 10 product categories and implemented the competitive bidding program on July 1, 2008.

2. The MIPPA and the Medicare DMEPOS Competitive Bidding Program

On July 15, 2008, section 154 of the Medicare Improvements for Patients and Providers Act (MIPPA) amended section 1847 of the Act to make certain limited changes to the Medicare DMEPOS competitive bidding program. Section 154(a) of the MIPPA delayed competition under the program and terminated the competitive bidding contracts effective June 30, 2008.

The MIPPA required the Secretary to conduct a second competition for Round 1 in 2009 (''Round 1 rebid'') that included the ''same items and services'' in the ''same areas'' as the 2007 Round 1 competition, with certain limited exceptions. Specifically, the Round 1 rebid excluded negative pressure wound therapy (NPWT) items and services and excluded Puerto Rico. In addition, section 154(a) of the MIPPA permanently excluded group 3 complex rehabilitative wheelchairs from the competitive bidding program by amending the definition of ''items and services'' in section 1847(a)(2) of the Act. Suppliers, including suppliers that previously were awarded a competitive bidding contract, had to resubmit bids to be considered for a contract under the Round 1 rebid.

Section 154(a) of the MIPPA also delayed competition for Round 2 of the competitive bidding program from 2009 to 2011 and subsequent competition under the program from 2009 until after 2011. A competition for a national mail order competitive bidding program may occur after 2010 as a result of the MIPPA.

The MIPPA mandated certain changes to the bidding process, starting with the Round 1 rebid. Section 154(a) of the MIPPA added a new paragraph (F) to section 1847(a)(1) of the Act, which sets forth a process for supplier feedback on missing financial documents. Pursuant to this requirement, we notify suppliers that submit their bids within a specific time period if their bid submission is missing any of the required financial documents. We allow suppliers to submit missing financial documents within 10 business days after this notice.

Section 154(b) of the MIPPA amended section 1847(b)(3) of the Act to require contract suppliers to notify us of subcontracting relationships they have entered into for the purpose of furnishing items and services under the competitive bidding program. Contract suppliers must also inform CMS whether each subcontractor meets the accreditation requirement set forth in section 1834(a)(20)(F)(i) of the Act, if applicable to the subcontractor.

Section 154(d) of the MIPPA excludes from the competitive bidding program certain DME furnished by a hospital to the hospital's patients during an admission or on the date of discharge.

On January 16, 2009, we published in the **Federal Register** (74 FR 2873) an interim final rule with comment period to incorporate into regulations at 42 CFR 414 Subpart F the MIPPA provisions discussed above.

In addition to the changes implemented through the interim final rule, section 154 of the MIPPA made other changes to the competitive bidding program which included:

- Exclusions of certain areas in subsequent rounds that are not already selected under Rounds 1 and 2;
- Extension of the Program Advisory and Oversight Committee;
- Exemption for Off-the-Shelf Orthotics from Competitive Bidding when provided by Certain Providers; and
- Evaluation of certain Healthcare Common Procedure Coding System (HCPCS) codes.

These provisions have been addressed through subsequent rulemaking or subregulatory guidance, as appropriate. For additional information about exclusions of certain areas in subsequent rounds that are not already selected under Rounds 1 and 2 and the exemption for off-the-shelf orthotics from competitive bidding when provided by certain providers, please refer to the November 29, 2010, **Federal Register** (75 FR 73574).

The following administrative requirements were also not addressed in the interim final rule:

- A post-award audit by the Office of Inspector General;
- Establishment of a Competitive Acquisition Ombudsman; and
- A Government Accountability Office report on the results of the competitive bidding program.

The MIPPA mandated a nationwide 9.5 percent reduction in the fee schedule payment amounts for all items and services that were competitively bid during the prior round of competition regardless of any exclusion such as group 3 complex rehabilitative wheelchairs. This provision was not addressed in the interim final rule because it was administered through the standard process for updating fee schedule amounts.

On February 10, 2009, we published a notice (74 FR 6557) in the **Federal Register** proposing to delay the effective date of the interim final rule by 60 days to allow Department officials the opportunity for further review of the issues of law and policy raised by the interim final rule. On February 19, 2009, we published another notice (74 FR 7653) in the **Federal Register** that implemented the temporary delay proposed on February 10, 2009. As specified by the February 19, 2009 notice, the interim final rule became effective on April 18, 2009.

B. Overview of the Interim Final Rule

On January 16, 2009, we published in the **Federal Register** an interim final rule (74 FR 2873 through 2881) entitled ''Changes to the Competitive Acquisition of Certain Durable Medical Equipment, Prosthetics, Orthotics and Supplies (DMEPOS) by Certain Provisions of the Medicare Improvements for Patients and Providers Act of 2008 (MIPPA)''. In the interim final rule, we revised current provisions at 42 CFR part 414, Subpart F, to incorporate certain self-implementing MIPPA provisions. The interim final rule addressed the following changes made by the MIPPA:

General Changes to the DMEPOS Competitive Bidding Program:

- Temporary Delay of the Medicare DMEPOS Competitive Bidding Program.
- Supplier Feedback on Missing Covered Documents.
- Disclosure of Subcontractors and their Accreditation Status under the Competitive Bidding Program.
- Exemption from Competitive Bidding for Certain DMEPOS.
- Exclusion of Group 3 Complex Rehabilitative Wheelchairs.

Round 1 Changes of the Competitive Bidding Program:

- Rebidding of the ''same areas'' as the previous Round 1, unless otherwise specified.
- Rebidding of the ''same items and services'' as the previous Round 1, unless otherwise specified.

C. Summary of the Interim Final Rule Provisions and Response to Comments on Changes to the Competitive Acquisition of Certain Durable Medical Equipment, Prosthetics, Orthotics and Supplies (DMEPOS) by Certain Provisions of the Medicare Improvements for Patients and Providers Act of 2008 (MIPPA)

The interim final rule was published in the **Federal Register** on January 16, 2009 with a comment period that ended

on March 17, 2009. We received approximately 793 timely pieces of comments from the interim final rule. Various parties submitted comments including DMEPOS manufacturers, suppliers, national associations representing the supplier community, and pharmacies.

We note that we received many comments on a wide range of issues that were not addressed in the interim final rule. We thank commenters for sharing their views on these issues; however, because these comments were outside the scope of the interim final rule, we do not address those comments in this final rule. In this final rule we provide a summary of each proposed provision, a summary of the public comments received, our responses to them, and any changes to the interim final rule we are implementing in this final rule as a result of comments received.

1. General Changes to the DMEPOS Competitive Bidding Program

a. Temporary Delay of the Medicare DMEPOS Competitive Bidding Program

Section 154(a) of the MIPPA amended section 1847(a)(1) of the Act to delay competition under Rounds 1 and 2 of the Competitive Bidding Program from 2007 and 2009 to 2009 and 2011, respectively. It also delayed competition for a national mail order program until after 2010 and competition in additional areas, other than mail order, until after 2011.

We revised § 414.410(a)(1) and (2) to indicate that competition under Round 1 of the competitive bidding program occurred in 2009 and competition under Round 2 of the program would occur in 2011. In addition, we have revised § 414.410(a)(3) to indicate that competition in additional MSAs will occur after 2011 (or, in the case of national mail order for items and services, after 2010).

The comments we received on Temporary Delay of the Medicare DMEPOS Competitive Bidding Program and our responses are set forth below.

Comment: Several commenters disagreed with starting competition for the Round 1 rebid in 2009 and wanted CMS to delay the program further. Some commenters suggested that CMS spend more time determining the impact and improving the quality of the DMEPOS Competitive Bidding Program for suppliers and beneficiaries by considering comments received on the interim final rule and evaluating the effects from Round 1 of the competitive bidding program before starting the Round 1 rebid.

Response: Section 154(a) of the MIPPA 2009 required the supplier competition for the Round 1 rebid to occur in 2009; therefore, we could not delay the program further. We note that we made numerous process improvements to the competitive bidding program for the Round 1 rebid. For example, we implemented an upgraded on-line bid submission system, early bidder education, and increased oversight of bidders that are new to product categories or competitive bidding areas to ensure they meet our requirements. These improvements, combined with the MIPPA reforms discussed in this final rule, resulted in a smoother experience for bidders and contributed to the successful implementation of the Round 1 rebid contracts and prices on January 1, 2011.

Consistent with our expectations, the Round 1 rebid results so far have been very positive. The program is fulfilling its promise as an effective tool to help Medicare set appropriate payment rates for DMEPOS items and services: payment amounts from the supplier competition for the Round 1 rebid of the program resulted in average savings of 35 percent as compared to the current fee schedule prices. The program is expected to save more than $17 billion in Medicare expenditures over 10 years. In addition to this positive impact on the Medicare Part B trust fund balance, the program is expected to save beneficiaries more than $11 billion over the next ten years as a result of lower coinsurance payments and the downward effect on monthly premium payments. The overall combined savings to Medicare and beneficiaries is therefore expected to total more than $28 billion over the first ten years of the program.

As anticipated, beneficiaries are receiving quality products from contract suppliers in their CBAs. 76 percent of contracts were awarded to suppliers already furnishing contract items in the local area. Additional contract suppliers have furnished other items in the local area or furnished contract items in other areas: fully 97 percent of contracts were awarded to suppliers already established in the competitive bidding area, the product category, or both. Also, CMS exceeded the the 30 percent small supplier target. For the Round 1 rebid, small suppliers, those with gross revenues of $3.5 million or less as defined for the program, make up about 51 percent of the contract suppliers. As discussed later in this preamble, our comprehensive monitoring program has shown a very smooth effective implementation with few inquiries and complaints and no changes in beneficiary health status outcomes.

After consideration of the public comments received, we are finalizing this provision without modification.

b. Supplier Feedback on Missing Covered Documents

Section 1847(b)(2)(A) of the Act prohibits the Secretary from awarding a contract under the program to a supplier unless the supplier meets applicable financial standards specified by the Secretary, taking into account the needs of small providers. We have implemented this requirement at § 414.414(d) of the competitive bidding regulations, which requires suppliers to submit, as part of their bids, financial documents specified in the request for bids (RFB).

The RFB issued for the Round 1 rebid required suppliers to submit the same categories of financial documents as we requested for the previous Round 1 competition. In the previous round of competition, we required suppliers to submit financial documents from the most recent 3 years. As stated in 42 CFR 414.414(d), the required financial documents have been specified in the RFB. Based on experience from the previous round of competition, we modified the required financial documents to lessen the burden on suppliers; instead of 3 years of documentation, we required only 1 year. We believe that we can determine whether a supplier demonstrates financial soundness by reviewing one year of documentation.

Section 154(a) of the MIPPA added a new paragraph (F) to section 1847(a)(1) of the Act, which established a detailed process by which we must notify suppliers of missing ''covered documents''—defined by MIPPA as financial, tax or other documents required to be submitted by a bidder as part of an original bid submission in order to meet required financial standards—if such documents are submitted within a specified time period. The MIPPA details the specific steps of this process and provides a timeline for each stage of this covered document submission review. We have implemented this provision of the MIPPA consistent with its detailed requirements.

Consistent with section 1847(a)(1)(F) of the Act, in the case of a bid in which one or more covered documents in connection with such a bid has been submitted not later than the covered document review date, we would notify suppliers of each covered document that is missing from the bidder's submission as of the covered document review date. As set out in the Act the ''covered document review date'' is the later of—

(1) The date that is 30 days before the final date specified by the Secretary for submission of bids; or (2) the date that is 30 days after the first date specified by the Secretary for submission of bids. For example, if a bid window opens on January 1st and closes on April 30th, the ''covered document review date'' would be the later of: (1) March 31st (30 days before the final date specified by the Secretary); or (2) January 31st (30 days after the first date specified by the Secretary). Therefore, in this case, the ''covered document review date'' would be March 31st. Suppliers that submit their financial documents after the covered document review date would not receive notice of any missing financial documents.

Section 1847(a)(1)(F)(i) of the Act requires that we notify bidders of any missing covered documents within 45 days after the covered document review date for the Round 1 rebid. In subsequent rounds of competition, we have 90 days after the covered document review date to provide such notice. For all rounds of competition, bidders that are notified of the missing covered document(s) have 10 business days after the date of notice to submit the missing covered document(s). If a supplier submits the missing covered document(s) within this time period, we may not reject the supplier's bid on the basis that any covered document is missing or has not been submitted on a timely basis.

Section 1847(a)(1)(F)(iii) of the Act places certain limitations on the covered document review process. First, the covered document review process applies only to the timely submission (prior to the covered document review date) of covered documents. Second, the process does not apply to any determination as to the accuracy or completeness of the covered documents submitted or whether such documents meet applicable financial requirements. Third, the process does not prevent us from rejecting a bid for reasons other than those not described in section 1847(a)(1)(F)(i)(II) of the Act. Fourth, the covered document review process shall not be construed as permitting a bidder to change bidding amounts or to make other changes in a bid submission.

We have amended § 414.414 by adding paragraphs (d)(2)(i) through (iii) to set forth the required covered document review process. These paragraphs identify the timeframes established by the MIPPA for—

- Suppliers to submit covered documents in order to be eligible to receive notice of any missing covered documents;
- CMS to review the submitted covered documents and notify bidders of any missing covered documents; and
- Suppliers to submit the missing covered documents.

We also added a definition for ''covered document'' and ''covered document review date'' to § 414.402.

Comment: Several commenters suggested that the decision to change financial document requirements from 3 years to 1 year should have been subjected to notice and comment rulemaking. Commenters believed that this would ensure that quality suppliers are selected as contract suppliers, taking into consideration historical demonstrated financial stability. Some commenters also believed that it would be easier to falsify 1 year worth of financial documents as opposed to 3 years.

Response: As noted in the interim final rule, regulations at 42 CFR 414.414(d) state that required financial documents will be specified in the RFB. Based on our experience from the initial Round 1 competition, we determined that one year of financial documents provides sufficient information for determining whether suppliers meet the required financial standards. In the interest of lessoning the burden on suppliers and ensuring compliance with program requirements, we therefore decided to revise the financial documentation requirements from three years to one year. We also sought public comment on the RFB for the Round 1 rebid through the Paperwork Reduction Act (PRA) process, and the Office of Management and Budget (OMB) approved the RFB (OMB Control Number 0938–1016).

Comment: One commenter reflected that, in Round 1 of the competitive bidding program, many bidders lost because they did not have the required documents and CMS did not allow suppliers to resend the documents after the close of the bid window.

Response: The MIPPA-mandated covered document review process was incorporated into our regulations through the interim final rule addressed this issue. Many Round 1 rebid bidders took advantage of this process, and we believe it greatly helped these bidders ensure that they submitted all required financial documents.

Comment: One commenter suggested that the rule needs to address not only missing documents but missing and incorrect contents in documents.

Response: We appreciate this comment; however, the statute specifically indicates that the covered document review process does not apply to the accuracy or completeness of individual documents.

After consideration of the public comments received, we are finalizing this provision without modification.

c. Disclosure of Subcontractors and Their Accreditation Status Under the Competitive Bidding Program

Section 154(b)(2) of the MIPPA added a new paragraph (C) to section 1847 (b)(3) of the Act. This new paragraph requires contract suppliers to disclose information on: (1) Each subcontracting arrangement the supplier has in furnishing items and services under the contract; and (2) whether each such subcontractor meets the accreditation requirement of section 1834(a)(20)(F)(i) of the Act, if applicable to such subcontractor. The contract supplier must make this disclosure not later than 10 days after the date a supplier enters into a contract with CMS. If the contract supplier subsequently enters into a subcontracting relationship, the supplier must disclose this information to CMS no later than 10 days after entering into the subcontracting relationship.

Section 154(b) of the MIPPA added section 1834(a)(20)(F)(i) to the Act, which mandates that the Secretary require suppliers furnishing items and services under a competitive bidding program on or after October 1, 2009, directly or as a subcontractor for another entity, to submit evidence of accreditation by a CMS-designated accreditation organization. Both contract suppliers and their subcontractors that furnish items and services under the competitive bidding program must do so in accordance with the applicable supplier standards found in Part 424, subpart D and other Federal regulations.

We have amended § 414.422, by revising paragraph (f) to set forth these requirements for disclosing subcontracting arrangements. We have also addressed subcontracting relationships and the method for disclosure of the subcontracting relationships in subregulatory guidance.

Comment: Some commenters stated that subcontracting relationships should not be allowed after contract suppliers have been selected. Commenters believed that companies that did not win a contract would contact the contract supplier and form an arrangement in which the contract supplier would bill for an item furnished by a non-contract supplier. Several commenters also mentioned that adding subcontractors after contract suppliers have been selected could mean that the contract suppliers are not

able to furnish items to beneficiaries in the CBA and that they need subcontractors to provide items for the contract supplier.

Response: The MIPPA specifically indicates that contract suppliers must disclose subcontracting relationships they establish after contract award; therefore, we do not have discretion to prohibit subcontracting after contract suppliers have been selected. Under the competitive bidding program, contract suppliers are permitted to subcontract under the same rules that apply to all DMEPOS suppliers. Thus, the extent to which contract suppliers subcontract is not a valid measure of contract suppliers' ability to furnish items.

We note that we have implemented a robust monitoring program to track and resolve any issues that might occur with program implementation and have not identified any concerns about contract suppliers' ability to furnish items. To date, the data show that Round 1 rebid implementation is going very smoothly with very few inquiries or complaints. For example, the competitive bidding call volume at the 1–800–MEDICARE call center for the first calendar quarter of 2011was less than 0.9 percent of 1–800–MEDICARE's total call volume. Most inquiries were about routine matters like selecting a contract supplier. Also, no changes in beneficiary health outcomes resulting from the competitive bidding program have been observed to date. The monitoring program includes:

- Local, on-the-ground presence in each competitive bidding area through the CMS regional offices and local ombudsmen;
- A complaint process for beneficiaries, caregivers, providers and suppliers to use for reporting concerns about contract suppliers or other competitive bidding implementation issues;
- Contract supplier quarterly reports identifying the brands of products they furnish;
- Real-time claims analysis to identify utilization trends, monitor health outcomes and beneficiary access, address aberrancies in services, and target potential fraud and abuse;
- A CMS Competitive Acquisition Ombudsman who will respond to complaints and inquiries from beneficiaries and suppliers about the application of the program and will issue an annual Report to Congress;
- Secret shopping; and
- Beneficiary surveys.

Comment: Some commenters recommended that CMS obtain and verify disclosures of both accreditation and licensing status of contract suppliers and subcontractors prior to awarding contracts.

Response: Regulations at § 414.414 specify that suppliers must be licensed and accredited to be selected for contract award. We carefully check all bidders during bid evaluation and reject any bidders that are not fully licensed and accredited. As specified by MIPPA, contract suppliers must disclose any subcontractors within set time frames after contract award; disclosures must indicate if the subcontractors meet applicable accreditation requirements. We check all subcontractor disclosures and verify that all applicable accreditation requirements have been met. If we find that a contract supplier has subcontracted with an entity that does not meet applicable accreditation requirements, we will take appropriate action to ensure that the contract supplier stops using the subcontractor until the subcontractor becomes properly accredited. Although MIPPA does not require specific disclosure of subcontractors' licensure status, contract suppliers, like all suppliers, must comply with all State regulatory and licensure requirements (see § 424.57(c)(1)((ii)). This would include any State regulatory requirements regarding applicable subcontractor licensure.

Comment: Many commenters wanted CMS to clarify what is considered to be a subcontracting relationship between the contract supplier and a subcontractor with respect to accreditation. One commenter wanted CMS to provide the industry with a framework for entering into subcontracts.

Response: Contract suppliers may subcontract to the same extent as any other DMEPOS suppliers. The supplier standards at § 424.57 set forth requirements regarding subcontracting arrangements for purchase of inventory, delivery and instruction on the use of Medicare-covered items, and maintenance and repair of rented equipment. The quality standards are a helpful reference tool in distinguishing the role of a primary supplier versus the role of a subcontractor as described in the supplier standards. We note that guidance about subcontracting, including guidance about accreditation of subcontractors, may be found on the National Supplier Clearinghouse Web site, *http://www.palmettogba.com/nsc* and the Competitive Bidding Implementation Contractor Web site at *http://www.dmecompetitivebid.com*.

Comment: One commenter believed that the accreditation status of a subcontractor is irrelevant to the contract supplier's relationship with the subcontractor. One commenter did not believe that disclosing the subcontractor was a part of the MIPPA statute.

Response: MIPPA sections 154(b)(1) and (2) explicitly require subcontractors to meet applicable accreditation requirements and require contract suppliers to disclose their subcontracting arrangements within specific time frames. We do not have the authority to eliminate this requirement.

After consideration of the public comments received, we are finalizing this provision without modification.

d. Exemption From Competitive Bidding for Certain DMEPOS

Section 414.404(b) previously exempted from competitive bidding certain DME items when furnished by a physician or treating practitioner to his or her own patients as part of his or her professional services. This exception is limited to crutches, canes, walkers, folding manual wheelchairs, blood glucose monitors, and infusion pumps that are considered DME. Section 154(d) of MIPPA amended section 1847(a) of the Act to exclude from the competitive bidding program these same items when they are furnished by hospitals to the hospital's own patients during an admission or on the date of discharge. We interpreted this exclusion to include only DMEPOS paid for under Part B of the Medicare program because section 1847 does not apply to items that are paid for under Part A. As discussed in the April 10, 2007 final rule, in accordance with § 414.404(b)(3) payment for items furnished under the exceptions in § 414.404(b) will be made in accordance with § 414.408(a).

We have revised § 414.402 to include a definition for hospitals and have revised § 414.404(b)(1) to incorporate the mandated exemption from the competitive bidding program for hospitals that furnish certain types of competitively bid DME to their own patients during an admission or on the date of discharge. In addition, we amended subparagraph (b)(1)(iii) to address the billing requirements for hospitals under this exemption.

Comment: Some commenters expressed concern that the MIPPA hospital exemption was not more expansive. Several commenters suggested that CMS reconsider including hospital-based suppliers in the competitive bidding program. One commenter suggested that although there is a hospital exemption, hospitals may have trouble finding DME equipment, such as oxygen, for snowbird beneficiaries. A few commenters believed that quality of care and efficient operations of hospitals

would be impacted if they were allowed to furnish some items directly to their patients while having to arrange with contract suppliers for furnishing other items not covered by the exemption. One commenter suggested that a separate competitive bidding process should be established for hospital-based DME suppliers.

Response: Section 154(d) of MIPPA explicitly described the scope of the hospital exemption, so we do not believe we have discretion to provide a broader exemption. We do not believe that separate competitions for suppliers that only furnish items to patients in hospitals is necessary or would result in efficient implementation of the requirements of section 1847 of the Act.

After consideration of the public comments received, we are finalizing this provision without modification.

e. Exclusion of Group 3 Complex Rehabilitative Power Wheelchairs

Section 1847(a)(2) of the Act defines the items and services subject to competitive bidding. Section 1847(a)(2)(A) of the Act includes DME and supplies as items and services subject to competitive bidding. Section 154(a) of the MIPPA amended this definition to exclude group 3 complex rehabilitative power wheelchairs (and related accessories when furnished in connection with such wheelchairs) from competitive bidding. For Medicare coding, coverage, and payment purposes, power wheelchairs are classified under several groups based on performance and durability test results, patient weight capacity, and equipment handling capabilities. For a description of the components, performance requirements and coding guidelines for group 3 power wheelchairs, see *https://www.dmepdac.com/resources/articles/2006/08_14_06.pdf.* Group 2 complex rehabilitative power wheelchairs were included in Round 1 rebid of the competitive bidding program because they were not excluded by the MIPPA.

We amended § 414.402 to revise the definition of ''item'' to exclude group 3 complex rehabilitative wheelchairs from the competitive bidding program.

Comment: One commenter agreed that the exclusion was good policy because the equipment needs to be properly designed or it would result in additional costs for the government. Another commenter believed that the exclusion should not be implemented because having some power wheelchair equipment options subject to competitive bidding while others are not would promote Medicare fraud.

Response: The statute explicitly excludes Group 3 complex rehabilitative power wheelchairs from the competitive bidding program, and therefore, we do not believe we have any discretion to include these items in the program.

Comment: Some commenters suggest that Group 2 complex rehabilitative power wheelchairs be excluded from the competitive bidding program for several reasons. One commenter suggested that, if the Group 2 complex rehabilitative power wheelchairs are not excluded, suppliers should be able to bid above the fee schedule amount. Another commenter stated that the inclusion of Group 2 complex rehabilitative power wheelchairs in the Round 1 rebid is not envisioned by the statute; this commenter did not believe that this product category has the potential for significant savings.

Response: The MIPPA excludes Group 3 complex rehabilitative power wheelchairs from the competitive bidding program but also mandates rebidding of the ''same items and services'' as the previous Round 1. Therefore, we had no discretion to exclude 2 complex rehabilitative power wheelchairs from the Round 1 rebid because these wheelchairs were included in the Round 1 competition.

After consideration of the public comments received, we are finalizing this provision without modification.

2. Round 1 Changes to the Competitive Bidding Program

a. Rebidding of the ''Same Areas'' as the Previous Round 1, Unless Otherwise Specified

Section 1847(a)(1)(D)(i)(II) of the Act, as amended by section 154(a) of the MIPPA, required us to conduct the supplier competition for the Round 1 rebid in 2009. Pursuant to section 1847(a)(1)(D)(i)(II) of the Act, we conducted the competition for the Round 1 rebid in a manner ''so that it occurs in 2009 with respect to the same items and services and the same areas'' as the first Round 1 competition, except as provided by section 1847(a)(1)(D)(i)(III) and (IV) of the Act. Under section 1847(a)(1)(D)(i)(III), as amended by the MIPPA, we excluded Puerto Rico so that the Round 1 rebid of the competitive bidding program occurred in 9 of the largest MSAs. Therefore, the Round 1 rebid occurred in the following MSAs:

- Cincinnati—Middletown (Ohio, Kentucky and Indiana)
- Cleveland—Elyria—Mentor (Ohio)
- Charlotte—Gastonia—Concord (North Carolina and South Carolina)
- Dallas—Fort Worth—Arlington (Texas)
- Kansas City (Missouri and Kansas)
- Miami—Fort Lauderdale—Miami Beach (Florida)
- Orlando (Florida)
- Pittsburgh (Pennsylvania)
- Riverside—San Bernardino—Ontario (California)

Section 154(a) of MIPPA mandated that we conduct the Round 1 ''rebid'' in the ''same areas''—except for Puerto Rico—as the previous competition in 2007. As stated in the **Federal Register** (72 FR 18016), we identified CBAs in the 2007 Round 1 competition by counties and zip codes to clearly identify the boundaries of a CBA. Therefore, we believe it is reasonable to implement the ''same areas'' mandate by conducting the Round 1 rebid in those same zip codes. Certain zip codes changed since the first competition. We therefore reviewed zip code changes made since 2007 and incorporated applicable updates to the zip codes for the Round 1 rebid. For example, if a particular zip code had been split into two new zip codes, we included the new zip codes in the CBA. We did not add any new zip codes that expanded the geographic area of the CBAs.

Accordingly, we have amended § 414.410(a)(1) to reflect the areas for competition set forth in section 1847(a)(1) of the Act, as amended by the MIPPA.

Comment: Several commenters recommended various changes to the areas for the Round 1 rebid competition. For example, several commenters suggested that a few MSAs have rural areas and should be excluded from the program to prevent patient access and quality issues. Some also felt that small suppliers would not be able to provide items to the rural parts of the MSAs, especially with lower reimbursements. One commenter suggested that the Dallas MSA is too large and should be split into two separate CBAs. One commenter recommended that CBAs should be limited to large cities and not divided at a county level. One commenter suggested that CMS choose different MSAs for the Round 1 rebid competition because the original MSAs' suppliers have been affected financially from Round 1 and because the suppliers that bid in the first round know the single payment amounts that were selected for those areas and may cause bids to be skewed.

Response: MIPPA explicitly required the Round 1 rebid competition to occur in the same areas as in the initial Round 1 competition except for Puerto Rico, therefore we do not have any discretion to change the areas for the Round 1 rebid.

After consideration of the public comments received, we are finalizing this provision without modification.

b. Rebidding of the ''Same Items and Services'' as the Previous Round 1, Unless Otherwise Specified

Section 1847(a)(1)(D)(i)(II) of the Act, as amended by the MIPPA, required that we conduct the Round 1 rebid competitive bidding program with respect to the ''same items and services'' as were previously bid in Round 1 except as provided in section 1847(a)(1)(D)(i)(IV) of the Act, which excludes negative pressure wound therapy. The Round 1 rebid also excludes group 3 complex rehabilitative power wheelchairs as noted previously. Therefore, the Round 1 rebid included the following categories of items and services:

- Oxygen Supplies and Equipment.
- Standard Power Wheelchairs, Scooters, and Related Accessories.
- Complex Rehabilitative Power Wheelchairs and Related Accessories (Group 2).
- Mail-Order Diabetic Supplies.
- Enteral Nutrients, Equipment and Supplies.
- Continuous Positive Airway Pressure (CPAP), Respiratory Assist Devices (RADs), and Related Supplies and Accessories.
- Hospital Beds and Related Accessories.
- Walkers and Related Accessories.
- Support Surfaces (Group 2 mattresses and overlays) in Miami.

In the April 10, 2007 **Federal Register** (72 FR 18084), we define an item, in part, as a product included in a competitive bidding program that is identified by a HCPCS code.

Therefore, consistent with our understanding of the MIPPA and the mandate that bidding in the Round 1 rebid occur with respect to the ''same items and services'' as the previous round of competition, we conducted the competition for the Round 1 rebid for essentially the same codes for which we bid in 2007. We have made certain adjustments to reflect changes in the HCPCS codes consistent with 42 CFR 414.426. We excluded obsolete codes and codes which, in light of the MIPPA amendments, are no longer separately payable. For example, under the MIPPA, the transfer of title provision was deleted, thus oxygen accessories are no longer separately payable because the supplier maintains ownership of the equipment. The final list of HCPCS codes for the Round 1 rebid was published on the Competitive Bidding Implementation Contractor (CBIC) Web site at *http://www.dmecompetitivebidcom.* prior to opening of the bid window.

Comment: Some commenters suggested that several items should be excluded from competitive bidding for a variety of reasons.

Response: The MIPPA specifically required us to conduct the Round 1 rebid competitive bidding program for the ''same items and services'' as were previously bid in Round 1 except negative pressure wound therapy and group 3 complex rehabilitative power wheelchairs, and therefore, we had no discretion to exclude these items from the Round 1 rebid.

Comment: One commenter agreed with the statutory exclusion of negative pressure wound therapy (NPWT) for the Round 1 rebid and suggested that it be excluded entirely from competitive bidding.

Response: Although MIPPA excluded NPWT from the Round 1 rebid, it did not provide a permanent exclusion from the competitive bidding program. The statute mandates competitive bidding for most items of DME, including NPWT equipment and supplies. CMS has decided to utilize the flexibility provided by the statute to phase in items under the program beginning with high cost or high volume items. The average monthly rental fee schedule amount for the NPWT pump is currently $1,558, meaning the beneficiary pays at least $312 per month on average for rental of this device. By comparison, the average monthly fee and corresponding coinsurance amount for a respiratory suction pump is $46 (monthly fee) and $9 (monthly coinsurance). A study conducted in 2009 by the Office of Inspector General for the Department of Health and Human Services found that suppliers purchase these pumps for significantly less, $3,604 on average, than Medicare pays over 13 months, currently $16,359. The savings potential for the Medicare program and beneficiary for this item is therefore very significant. Medicare allowed charges for NPWT equipment and supplies were approximately $178 million in 2010, making this a high volume and high cost item as well.

We note that section 154 (c) (3) of MIPPA required the Secretary of the Department of Health and Human Services (DHHS) to perform an evaluation of the Healthcare Common Procedure Coding System (HCPCS) coding decisions for NPWT devices. CMS requested this report from The Technology Assessment Program (TAP) at the Agency for Healthcare Research and Quality (AHRQ). AHRQ determined that there are no significant therapeutic distinctions among NPWT devices. Because there are no significant differences among NPWT products, the current HCPCS codes are adequate and do not need to be updated or changed. The study results are available on the AHRQ Web site at: *http://www.ahrq.gov/clinic/ta/negpresswtd/npwtd01.htm.*

After consideration of the public comments received, we are finalizing this provision without modification.

D. Other Public Comments Received on the January 16, 2009 Interim Final Rule

We ordinarily publish a notice of proposed rulemaking in the **Federal Register** to provide for public comment before the provisions of a rule take effect in accordance with section 553(b) of the Administrative Procedure Act (APA) and section 1871 of the Act. This process may be waived, however, if an agency finds good cause that a notice and comment procedure is impracticable, unnecessary, or contrary to the public interest. We found good cause to waive notice and comment rulemaking because we simply conformed the competitive bidding regulations to specific, detailed, and proscriptive statutory provisions.

The comments we received on the waiver of proposed rulemaking and our responses are set forth below.

Comment: Several commenters believed that CMS should have engaged in notice and comment rulemaking to implement MIPPA provisions rather than issuing an interim final rule with comment period for several reasons. One reason was so that stakeholders would have sufficient time and opportunity to give input on the program. The second reason was because commenters wanted to ensure that comments received during the comment period would be taken into account before any final rule was published. The third reason commenters wanted CMS to conduct a notice and comment rulemaking was because commenters felt that important issues were left unaddressed in the interim final rule such as how the program would be impacted by the changes that were made by MIPPA, lessons learned from Round 1, and supplier and beneficiary concerns and suggestions from Round 1. Commenters felt that CMS should address major issues in notice and comment rulemaking instead of using of subregulatory guidance and Web site postings.

Response: As we explained in the interim final rule, under the waiver of proposed rulemaking, we ordinarily publish a notice of proposed rulemaking to provide for public comment before provisions of a rule take effect, but the

process may be waived if the agency finds good cause that a notice and comment procedure is impracticable, unnecessary, or contrary to public interest. Because CMS issued the rule to conform to the specific statutory requirements contained in section 154 of the MIPPA it was impractical, unnecessary, and contrary to public interest to use notice and comment rulemaking to incorporate these provisions into regulations. As indicated earlier in this preamble, we also made process improvements to ensure compliance with the statute that did not require notice and comment rulemaking before we conducted the Round 1 rebid. Finally, we agree that substantive issues should be addressed through notice and comment rulemaking consistent with the Administrative Procedure Act and note that we used notice and comment rulemaking to implement non-self-implementing provisions of MIPPA (see 75 FR 73170 (November 29, 2010).

Comment: A few commenters disagreed with the statement in the interim final rule that MIPPA ''did not alter fundamental requirements * * * used by us in * * * selecting suppliers under the program''. Some of the commenters believed that the interim final rule is not self-implementing and was not clear or understandable.

Response: We continue to believe as discussed in the interim final rule that the provisions of MIPPA included in the interim final rule were self-implementing. The language in these provisions was highly detailed and proscriptive and did not provide options for discretionary revisions.

V. Collection of Information Requirements

A. Legislative Requirement for Solicitation of Comments

Under the Paperwork Reduction Act of 1995, we are required to provide 60-day notice in the **Federal Register** and solicit public comment before a collection of information requirement is submitted to the Office of Management and Budget (OMB) for review and approval. In order to fairly evaluate whether an information collection should be approved by OMB, section 3506(c)(2)(A) of the Paperwork Reduction Act of 1995 requires that we solicit comment on the following issues:

- The need for the information collection and its usefulness in carrying out the proper functions of our agency.
- The accuracy of our estimate of the information collection burden.
- The quality, utility, and clarity of the information to be collected.
- Recommendations to minimize the information collection burden on the affected public, including automated collection techniques.

Because we did not receive any comments for the ESRD PPS, we are finalizing the collection of information section as proposed.

B. Requirements in Regulation Text

We solicited public comment on the issues below for the following sections of this document that contain information collection requirements (ICRs):

As discussed in section I.B.3 of this final rule, to receive the low-volume adjustment, an ESRD facility would need to provide an attestation to their Fiscal Intermediary or Medicare Administrative Contractor (FI/MAC) that it has met the criteria to qualify as a low-volume facility no later than November 1st of each year preceding the applicable low-volume adjustment payment year (except for the 2012 low-volume payment year, which has an attestation submission deadline of January 3, 2012). The FI/MAC would verify the ESRD facility's attestation of their low-volume status for the 3-consecutive years immediately preceding the payment year, using the ESRD facility's most recent final-settled or as-filed 12-month cost reports.

The burden associated with the requirement is the time and effort necessary for an ESRD facility attesting as a low-volume facility to develop an attestation and submit it to their FI/MAC. In the proposed rule, we estimated that it would require an administrative staff member from each low-volume facility 10 minutes to obtain the total number of treatments in the cost reports necessary for eligibility determination, develop the attestation, and submit it to their FI/MAC. For this final rule, using 2010 claims our contractor, UM–KECC, identified 963 ESRD facilities as providing treatments below the low-volume threshold of 4,000 treatments in 2010. Of these 963 facilities, we estimated that 378 met the additional low-volume criteria as specified in § 413.232. Further, due to the historical trend of increase in the number of small dialysis facilities, we believe that several dozen additional ESRD facilities may meet the criteria of a low-volume facility prior to the CY 2012 payment year. To take these facilities into account, we have rounded the total number of estimated low-volume facilities to 400. Therefore, for CY 2012, we estimate that the total initial ESRD facility burden would be 67 hours. The estimated cost associated with compliance with this requirement is $2.61 per ESRD facility and a total of $1,044 for all 400 facilities. These costs are estimated using the 2010 estimate for the occupational code 43–0000 Office and Administrative Support Occupation mean hourly wage of $15.66 as stated by the U.S. Bureau of Labor Statistics.

C. Additional Information Collection Requirements

This final rule imposes collection of information requirements as outlined in the regulation text and specified above. However, this final rule also makes reference to several associated information collections that are not discussed in the regulation text contained in this document. The following is a discussion of these information collections, some of which have already received OMB approval.

1. Display of Certificates for the PY 2013 and PY 2014 ESRD QIP

Section II.B of this rule discusses a disclosure requirement for both the PY 2013 and the PY 2014 ESRD QIP. As stated earlier in this final rule, section 1881(h)(6)(C) of the Act requires the Secretary to provide certificates to dialysis care providers and facilities about their total performance scores under the ESRD QIP. This section also requires each provider and facility that receives a QIP certificate to display it prominently in patient areas.

To comply with this requirement, we proposed to issue a PY 2013 and PY 2014 ESRD QIP certificate to providers and facilities via a generally accessible electronic file format. We proposed that each provider and facility would be required to prominently display the applicable ESRD QIP certificate in patient areas. In addition, we proposed that each provider and facility would take the necessary measures to ensure the security of the certificate in the patient areas. Finally, we proposed that each provider/facility would be required to have staff available to answer questions about the certificate in an understandable manner, taking into account that some patients might have limited English proficiency. These proposals represent no change from the policy finalized for the PY 2012 ESRD QIP, and we are finalizing them in this final rule.

The burden associated with the aforementioned requirements is the time and effort necessary for providers and facilities to print the applicable ESRD QIP certificate, display the certificate prominently in patient areas, ensure the safety of the certificate, and respond to patient inquiries in reference to the certificates. We estimate that

approximately 5,503 providers and facilities will receive an ESRD QIP certificate in PY 2013 and PY 2014 and will be required to display it. We also estimate that it will take each provider/facility 10 minutes per year to print, prominently display, and secure the ESRD QIP certificate, for a total estimated annual burden of 917 hours [(10/60) hours × 5503 facilities] at a cost of $31, 755 [917 hours × $34.63 per hour]. We estimate that approximately one-third of ESRD patients (estimated to be 119,686 out of 395,058) will ask a question about the ESRD QIP certificate. We further estimate that it will take each provider/facility approximately 5 minutes to answer each patient question about the applicable ESRD QIP certificate, or 1.8 hours per provider or facility each year. The total estimated annual burden associated with this requirement is 9,905 hours [1.8 hours × 5503 providers]. The total estimated annual burden for both displaying the ESRD QIP certificates and answering patient questions about the certificates is 10,822 hours [10,822 hours + 9,905 hours] (for each of PY 2013 and PY 2014). While the total estimated annual burden associated with both of these requirements as discussed is 10,822 hours, we do not believe that there will be a significant cost associated with these requirements because we are not proposing to require providers/facilities to complete new forms. As discussed in section A.1.3 of this final rule, we estimate that the total cost for all ESRD providers/facilities to comply with the collection of information requirements associated with the certificate each year would be less than $400,000.

We did not receive any public comments regarding our analysis of the economic impact of the collection of information requirement for this proposal.

2. NHSN Reporting Requirement for the PY 2014 ESRD QIP

As stated above in section II.B.2.b.vi of this final rule, we are finalizing a proposal to include reporting dialysis events to the National Healthcare Safety Network (NHSN) as a reporting measure for the PY 2014 ESRD QIP. Specifically, we are requiring providers/facilities to: (1) Enroll in the NHSN and complete required training as verified by a digital certificate obtained from CDC; and (2) submit at least 3-consecutive months of dialysis event data to the NHSN.

The burden associated with these requirements is the time and effort necessary for providers and facilities to enroll in the NHSN and conduct the required training and submit 3 months of data. We estimated in the proposed rule that approximately 5,503 providers and facilities will enroll in the NHSN and submit the necessary data. We also estimated that it would take each provider or facility 48 hours per year to enroll in the NHSN and complete the required training, for a total estimated annual burden of 264,144 hours [5,503 providers × 48 hours]. Upon further consultation with the CDC, we have now revised this estimate. We now believe that it will take each provider/facility approximately 8 hours to enroll in the NHSN and complete the required training, for a total estimated burden of 44,024 hours (8 hours × 5,503 facilities). Based on the Bureau of Labor Statistics we estimate the average salary to be $34.63 per hour. Thus, average cost for each provider/facility will be $277.04 (8 hours × $34.63 per hour). Across all 5,503 providers/facilities, this will equal approximately $1.5 million ($277.04 × 5,503 facilities). However, we further estimate that the number of dialysis events in a 3-month period will be 125,680 for the 2014 ESRD population. We estimate it will require 2 hours of staff time per month to collect and submit data on these events and the estimated burden for submitting 3 months of data will be 33,018 hours (6 hours times 5,503 facilities). If the dialysis events are distributed evenly across all 5,503 providers/facilities, that will result in an additional 6-hour burden ($218.58 (6 hours times $36.43)) for each provider/facility. Based upon our updated analysis, the total estimated annual burden for enrolling in the NHSN, conducting the required training, and submitting 3-consecutive months of data is 77,042 hours (44,024 + 33,018). We estimate that the total cost for all ESRD providers/facilities to comply with the collection of information requirements associated with NHSN reporting requirement each year will be less than $2.8 million (77,042 × $36.43), with the total average cost per provider/facility approximately $508.80 ($2.8 million/5,503 facilities).

We did not receive any public comments regarding our proposed analysis of the economic impact of the collection of information requirements related to the adoption of an NHSN reporting measure for the PY 2014 ESRD QIP.

3. Patient Experience Survey Usage Requirement for the PY 2014 ESRD QIP

As stated above in section B.A.2. of this final rule, we are finalizing our proposal to include a measure that assesses provider/facility usage of the In-Center Hemodialysis (ICH) Consumer Assessment of Healthcare Providers and Systems (CAHPS) Survey as a reporting measure for the PY 2014 ESRD QIP. The burden associated with this requirement is the time and effort necessary for providers and facilities to administer the ICH CAHPS survey and submit an attestation to CMS that they successfully administered the survey.

We estimate that approximately 5,503 providers and facilities will administer the ICH CAHPS survey and submit an attestation to that affect. We estimate that it will take each provider or facility 16 hours per year to be trained on the survey features. We further estimate that it will take each provider/facility approximately 5 minutes to submit the attestation each year. The estimated total annual burden on providers/facilities is estimated to be 88,507 hours [(5,503 providers × 16 hours) + (5,503 providers × (5/60) hours)] which is valued at $3 million [88,507 hours × $34.63 per hour], or $556.97 per provider/facility [$3 million/5,503 providers]. We estimate that administering the survey would take a third-party entity 45 minutes per patient (to account for variability in education levels) and 200 surveys per year which equals 150 hours [(45/60) hours × 200 surveys] or $2,707.32 [150 hours × $17.58 per hour] per facility-year to administer the ICH CAHPS survey for an estimated annual burden of 825,450 hours (150 hours × 5,503 providers) which is valued at $14.5 million ($2,637.00 × 5,503 providers). As discussed in section A. of this final rule, we estimate that the total cost for ESRD providers/facilities to comply with the collection of information requirements associated with administering the ICH CAHPS survey each year will be approximately $3,193.97 [$556.97 + $2,637.00] or $17.5 million [$3 million + $14.5 million] across all ESRD providers/facilities.

We did not receive any public comments regarding the proposed collection of information requirements associated with our adoption of this measure for the PY 2014 ESRD QIP.

4. Mineral Metabolism Reporting Requirement for the 2014 ESRD QIP

As stated above in section B.A.2 of this final rule, we are finalizing our proposal to include a Mineral Metabolism reporting measure as part of the PY 2014 ESRD QIP. The burden associated with this requirement is the time and effort necessary for providers and facilities to review their records and submit an attestation to CMS that they had monitored on a monthly basis the serum calcium and serum phosphorus levels of all patients each month.

We estimate that approximately 5,503 providers and facilities will submit the

attestation. We estimate that it will take each provider or facility approximately 18 hours to review its records and submit the attestation each year. The estimated total annual burden on providers/facilities is estimated to be 99,054 hours [18 hours × 5,503 providers] which is valued at $3.43 million [99,054 hours × $34.63 per hour], or $623 per provider/facility [$3.43 million/5,503 providers].

We did not receive any public comments regarding our proposed collection of information requirements associated with the adoption of a mineral metabolism reporting measure for the PY 2014 ESRD QIP.

5. Competitive Acquisition Program for Certain Durable Medical Equipment, Prosthetics, Orthotics and Supplies (DMEPOS) Collection of Information Requirements

We solicited public comment on the following information collection requirements (ICRs):

i. ICRs Regarding Round 1 Rebid

We previously estimated that the burden associated with Round 1 would be 1,086,164 hours (68 hours × 15,973 bids). Our estimate was that on average it would take a supplier 68 hours to complete and submit a bid and that we would receive 15,973 bids. Although we expect the amount of hours to generally remain the same (68 hours) for the Round 1 rebid, based on our Round 1 experience we anticipated fewer bids. For the 2007 Round 1 of the competitive bidding program, we received approximately 6,500 bids. Therefore, the total estimated burden associated with the Round 1 rebid was approximately 442,000 hours (68 hours × 6,500).

ii. ICRs Regarding Disclosure of Subcontracting Arrangements

Section 414.422(f) states that suppliers entering into a contract with CMS must disclose information on each subcontracting arrangement that the supplier has to furnish items and services under the contract and whether each subcontractor meets the accreditation requirements in section 424.57, if applicable. Section 414.422(f) also requires that the required disclosure be made no later than 10 days after the date a supplier enters into a contract with CMS or 10 days after a supplier enters into a subcontracting arrangement after entering into a contract with CMS.

The burden associated with the requirements in § 414.422(f) is the time and effort necessary to disclose the information to CMS. In the 2007 Round 1 competition, there were 329 winning suppliers. Therefore, we approximated fewer than 400 winning suppliers for the Round 1 rebid. Also, we estimated it will take each of the winning suppliers that use subcontractors on average approximately 1.5 hours to submit information on each subcontracting arrangement to furnish items and services under the contract and whether each subcontractor meets the accreditation requirements in § 424.57, if applicable. Those that do not use subcontractors will not have a reporting burden. The total estimated burden associated with these requirements is approximately 600 hours (1.5 hours × 400 winning suppliers).

We did not receive any comments on the information collection requirements of the interim final rule. We sought comments on these information collection requirements again in the May 19, 2009 **Federal Register** (74 FR 23415), and the Office of Management and Budget (OMB) approved the collection (OMB Control Number 0938–1016).

VII. Economic Analyses

A. Regulatory Impact Analysis

1. Introduction

We examined the impacts of this final rule as required by Executive Orders 12866 (September 30, 1993, Regulatory Planning and Review) and Executive Order 13563 on Improving Regulation and Regulatory Review (January 18, 2011). Executive Orders 12866 and 13563 direct agencies to assess all costs and benefits of available regulatory alternatives and, if regulation is necessary, to select regulatory approaches that maximize net benefits (including potential economic, environmental, public health and safety effects, distributive impacts, and equity). Executive Order 13563 emphasizes the importance of quantifying both costs and benefits, of reducing costs, of harmonizing rules, and of promoting flexibility. This rule has been designated an ''economically'' significant rule, under section 3(f)(1) of Executive Order 12866. Accordingly, the rule has been reviewed by the Office of Management and Budget. We have prepared a Regulatory Impact Analysis that to the best of our ability presents the costs and benefits of the final rule. We solicited comments on the regulatory impact analysis provided.

2. Statement of Need

This rule finalizes a number of routine updates for renal dialysis services in CY 2012, implementing the second year of the transition, and makes several policy and technical changes to the CY 2011 ESRD PPS final rule. This includes updates to the ESRD PPS and composite rate base rates, wage index values, wage index budget-neutrality adjustment factors, outlier payment policy, low-volume adjustment and transition budget-neutrality adjustment. Failure to publish this final rule would result in ESRD facilities not receiving appropriate payments in CY 2012.

In addition, this rule will implement a QIP for Medicare ESRD dialysis providers and facilities with payment reductions beginning January 1, 2013. Under section 1881(h) of the Act, after selecting measures, establishing performance standards that apply to each of the measures, specifying a performance period, and developing a methodology for assessing the total performance of each provider and facility based on the specified performance standards, the Secretary is required to apply an appropriate reduction to ESRD providers and facilities that do not meet or exceed the established total performance score. Our vision is to continue to implement a robust, comprehensive ESRD QIP that builds on the foundation that has already been established in providing incentives to providers/facilities to improve the quality of care they provide to Medicare beneficiaries.

Also, this final rule will revise the ambulance fee schedule regulations to conform to the requirements of section 106 of the Medicare and Medicaid Extenders Act of 2010 Public Law 111–309 (MMEA). This final rule also revises the definition of durable medical equipment. The revision adds a 3-year MLR that must be met by an item or device in order to be considered durable for the purpose of classifying the item under the Medicare benefit category for DME. The proposed rule would not impact items classified and covered as DME before the new rule takes effect or supplies and accessories used with covered DME. Finally, this final rule incorporates into regulations certain self-implementing provisions of section 154 of MIPPA that affect the DMEPOS Competitive Bidding Program.

3. Overall Impact

We estimate that the final revisions to the ESRD PPS will result in an increase of approximately $240 million in payments to ESRD facilities in CY 2012. Furthermore, as a result of implementing the ESRD QIP for Medicare outpatient ESRD dialysis providers and facilities, we estimate aggregate payment reductions in payment years 2013 and 2014 would be $23.7 million and $22.1 million,

respectively. However, given the lack of data for several measures, the actual impact of the PY 2014 ESRD QIP may vary significantly from the values provided herein. Lastly, the aggregate costs associated with the QIP collection of information requirements described in section III.1 of this final rule (Display of Certificates for the 2013 ESRD QIP) are estimated to be $400,000 for all ESRD providers/facilities in PY 2013. The additional estimated aggregate costs associated with the collection of information requirements described in sections III.1. (Display of Certificates for the PY 2013 and PY 2014 ESRD QIP), III.2 (NHSN Reporting Requirement for the PY 2014 ESRD QIP), III.3 (Patient Experience Survey Usage Requirement for the PY 2014 ESRD QIP) and III.4 (Mineral Metabolism Reporting Requirement for the PY 2014 ESRD QIP) in this final rule are expected to be approximately less than $24 million for all participating ESRD facilities.

The impact of section 106 of the MMEA, requiring the extension of certain add-on payments for ground ambulance services, and the extension of certain rural area designations for purposes of air ambulance payment, through CY 2011, is estimated to be $20 million (for CY 2011).

The fiscal impact of the proposed 3-year MLR cannot be estimated because it is difficult to predict how many different types of devices will be introduced in the market in the future that may or may not qualify as DME items as a result of the new rule. We would expect that this final rule would have a small, if any, savings impact on the program.

Finally, we believe that the changes to the Medicare DMEPOS Competitive Bidding Program have a minimal fiscal impact because they are very limited and do not change fundamental program requirements.

B. Detailed Economic Analysis

1. CY 2012 End-Stage Renal Disease Prospective Payment System

a. Effects on ESRD Facilities

As explained in the proposed rule (76 FR 40542), to understand the impact of the changes affecting payments to different categories of ESRD facilities, it is necessary to compare estimated payments (that is, payments made under the 100 percent ESRD PPS and those under the blended payment during the transition) in CY 2012 to estimated payments (that is, payments made under the 100 percent ESRD PPS and those under the ESRD PPS blended payment during the transition) in CY 2011. To estimate the impact among various classes of ESRD facilities, it is imperative that the estimates of payments in CY 2011 and CY 2012 contain similar inputs. Therefore, we simulated payments only for those ESRD facilities that we are able to calculate both current payments and new payments.

For this final rule, we used the June 2011 update of CY 2010 National Claims History file as a basis for Medicare dialysis treatments and payments under the ESRD PPS. We updated the 2010 claims to 2011 and 2012 using various updates. The updates to the ESRD PPS base rate and the base composite rate portion of the blended rate during the transition are described in section I.B of this final rule. In addition, in order to prepare an impact analysis, since some providers opted to be paid the blended payment amount during the transition, we made various assumptions about price growth for the formerly separately billable drugs and laboratory tests with regard to the composite portion of the ESRD PPS blended payment during the transition. These rates of price growth are briefly outlined below, and are described in more detail in the CY 2011 ESRD PPS final rule (75 FR 49078 through 49080).

We used the CY 2010 amounts for the CY 2011 and CY 2012 amounts for Supplies and Other Services, since this category primarily includes the $0.50 administration fee for separately billable part B drugs and this fee is not increased; thus we used no price update. Because some ESRD facilities will receive blended payments during the transition and receive payment for ESRD drugs and biologicals based on their average sales price plus 6 percent (ASP+6), we estimated price growth for these drugs and biologicals based on ASP+6 percent. We updated the last available quarter of actual ASP data for the top twelve drugs (the fourth quarter of 2011) thru 2012 by using the quarterly growth in the Producer Price Index (PPI) for Drugs, consistent with the method for addressing price growth in the ESRDB market basket. This resulted in 1.7 percent, 1.4 percent, 1.1 percent, and 0.8 percent increase, respectively, for the first thru the fourth quarter of 2012. Since the top twelve drugs account for over 99 percent of total former separately billable Part B drug payments, we used a weighted average growth of the top twelve drugs, for the remainder. Table 7 below shows the updates used for the drugs.

We updated payments for laboratory tests paid under the laboratory fee schedule to 2011 and 2012 using the statutory required update of the CPI–U increase with any legislative adjustments. For this final rule, the growth from 2010 to 2011 is −1.8 percent and the growth from 2010 to 2012 is −1.2 percent.

BILLING CODE 4120–01–P

Table 7: Price Increases from 2010 to 2011 and 2010 to 2012 of Former Separately Billable Part B Drugs.

Drugs and Biologicals	Price Update 2010 to 2011	Price Update 2010 to 2012
EPO	2.1%	6.9%
Paricalcitol	-18.4%	-26.4%
Sodium_ferric_glut	-2.1%	20.8%
Iron_sucrose	-3.0%	-8.7%
Levocarnitine	19.3%	47.7%
Doxercalciferol	2.8%	-6.3%
Calcitriol	-15.1%	-45.0%
Vancomycin	-8.7%	-10.6%
Alteplase	8.5%	17.4%
Aranesp	6.3%	14.4%
Daptomycin	8.2%	15.3%
Ferumoxytol	-13.3%	-14.6%
Other Injectibles	-0.5%	1.9%

Table 8 shows the impact of the estimated CY 2012 ESRD payments compared to estimated payments to ESRD facilities in CY 2011.

Table 8: Impact of Changes in Payments to ESRD Facilities for CY 2012 ESRD FR

[Percent change in total payments to ESRD facilities (both program and beneficiaries)]

	A	B	C	D	E
Facility Type	Number of Facilities	Number of Treatments (in millions)	Effect of 2012 Changes in Outlier Policy	Effect of 2012 Changes in Wage Indexes	Effect of Total 2012 changes[3]
All Facilities	5,503	40.0	0.3%	0.0%	2.5%
Type					
Freestanding	4,943	36.3	0.4%	0.0%	2.5%
Hospital based	560	3.6	-0.1%	-0.3%	2.3%
Ownership Type					
Large dialysis organization	3,544	25.9	0.5%	0.1%	2.6%
Regional chain	857	6.6	0.1%	-0.1%	2.2%
Independent	663	4.7	0.1%	0.0%	2.3%
Hospital based[1]	437	2.8	-0.1%	-0.3%	2.3%
Unknown	2	0.0	0.5%	0.9%	3.6%
Geographic Location					
Urban	4,280	33.3	0.3%	0.0%	2.5%
Rural	1,223	6.7	0.4%	-0.1%	2.5%
Census Region					
East North Central	908	6.1	0.3%	-0.2%	2.3%
East South Central	445	3.0	0.5%	-0.2%	2.5%
Middle Atlantic	610	4.9	0.2%	0.1%	2.5%
Mountain	328	1.9	0.2%	0.1%	2.5%
New England	167	1.3	0.3%	0.2%	2.6%
Pacific	641	5.3	0.2%	0.3%	2.6%
South Atlantic	1,209	9.1	0.5%	-0.2%	2.3%
West North Central	405	2.2	0.2%	0.2%	2.6%
West South Central	751	5.8	0.3%	0.3%	2.9%
Puerto Rico and Virgin Islands	39	0.4	0.3%	-2.4%	0.3%
Facility Size					
Less than 4,000 treatments[2]	963	2.1	0.2%	0.0%	2.5%
4,000 to 9,999 treatments	2,174	11.2	0.4%	-0.1%	2.4%
10,000 or more treatments	2,318	26.6	0.3%	0.0%	2.5%
Unknown	48	0.1	0.1%	-0.4%	2.2%
Percentage of Pediatric Patients					
Less than 2%	5,395	39.5	0.3%	0.0%	2.5%
Between 2% and19%	46	0.4	0.1%	-0.1%	2.4%
Between 20% and 49%	8	0.0	0.0%	0.0%	2.4%
More than 50%	54	0.0	0.0%	-0.1%	1.7%

1 Includes hospital based facilities not reported to have large dialysis organization or regional chain ownership.

2 Of the 963 Facilities with less than 4,000 treatments, only 378 qualify for the low-volume adjustment. The low-volume adjustment is mandated by Congress, is not applied to pediatric patients. The impact to these Low volume Facilities is a 2.8% increase in payments.

3 Includes the effect of the ESRDB Market Basket minus productivity adjustment, which results in an increase of 2.1% to the ESRD PPS base and the Composite Rate portion of the blended payment for those facilities that opted to be paid under the transition. Also includes the effect of the change in the drug add-on percentage from14.7% to 14.3% to the composite rate portion of the blended payment for those facilities that opted to be paid under the transition. Includes the effect of the blended payment percentage changing from 75/25 to 50/50 from CY 2011 to CY 2012 for those facilities that choose to be paid under the transition.

Note: Totals do not necessarily equal the sum of rounded parts

BILLING CODE 4120–01–C

Column A of the impact table indicates the number of ESRD facilities for each impact category and column B indicates the number of dialysis treatments (in millions). The overall effect of the final changes to outlier payment policy and the final changes for the BSA national average described in section I.C.10 and section .I.C.9, respectively, of this final rule, are shown in column C. For CY 2012, the impact on all facilities as a result of the changes to outlier payment policy and the BSA national average would be a 0.3 percent increase in estimated payments. The estimated impact of the changes to outlier payment policy and the BSA national average ranges from −0.1 percent decrease to a 0.5 percent increase. Most ESRD facilities are anticipated to experience a positive effect in their estimated CY 2012 payments as a result of the outlier policy and BSA national average changes being finalized.

Column D shows the effect of the wage index on ESRD facilities and reflects the CY 2012 wage index values for the composite rate portion of the blended payment during the transition and the ESRD PPS payments. Facilities located in the census region of Puerto Rico and the Virgin Islands would receive a 2.4 percent decrease in estimated payments in CY 2012. Since most of the facilities in this category are located in Puerto Rico, the decrease is primarily due to the reduction in the wage index floor (which only affects facilities in Puerto Rico in CY 2012). Renal dialysis facilities outside of Puerto Rico would experience changes in estimated payments ranging from a 0.4 percent decrease to a 0.9 percent increase due to the update of the wage index.

Column E reflects the overall impact (that is the effects of the outlier policy and BSA national average changes, the wage index, the effect of the ESRDB market basket increase minus productivity adjustment, and the effect of the change in the blended payment percentage from 75 percent of payments based on the composite rate system and 25 percent based on the ESRD PPS in 2011, to 50/50, respectively, for 2012, for those facilities that opted to be paid under the transition). We expect that overall, ESRD facilities will experience a 2.5 percent increase in estimated payments in 2012. ESRD facilities in Puerto Rico are expected to receive a 0.3 percent increase in their estimated payments in CY 2012. This negligible increase is primarily due to the negative impact of the wage index. The remainder of ESRD facilities are expected to be positively impacted ranging from an increase of 1.7 percent to 3.6 percent in their 2012 estimated payments.

b. Effects on Other Providers

Under the ESRD PPS, ESRD facilities are paid directly for the renal dialysis bundle and other provider types such as laboratories, DME suppliers, and pharmacies, may no longer bill Medicare directly for renal dialysis services. Rather, effective January, 1, 2011, such other providers can only furnish renal dialysis services under arrangements with ESRD facilities and must seek payment from ESRD facilities rather than Medicare. Under the ESRD PPS, Medicare pays ESRD facilities one payment for renal dialysis services, which may have been separately paid to suppliers by Medicare prior to the implementation of the ESRD PPS. Therefore, in CY 2012, the second year of the ESRD PPS, we estimate that the ESRD PPS will have zero impact on these other providers.

c. Effects on the Medicare Program

We estimate that Medicare spending (total Medicare program payments) for ESRD facilities in 2012 will be approximately $8.2 billion. This estimate is based on various price update factors discussed in section VII.B in this final rule. In addition, we estimate that there will be an increase in fee-for-service Medicare beneficiary enrollment of 4.3 percent in CY 2012.

d. Effects on Medicare Beneficiaries

Under the ESRD PPS, beneficiaries are responsible for paying 20 percent of the ESRD PPS payment amount or blended payment amount for patients treated in facilities going through the ESRD PPS transition. As a result of the projected 2.5 percent overall increase in the ESRD PPS payment amounts in CY 2012, we estimate that there will be an increase in beneficiary co-insurance payments of 2.5 percent in CY 2012, which translates to approximately $50 million.

e. Alternatives Considered

As we explained in the proposed rule (76 FR 40544), we considered eliminating all laboratory tests from the outlier policy, but instead we proposed to eliminate only the Automated Multi-Channel Chemistry (AMCC) panel tests. We indicated that we believed this approach would continue to recognize expensive laboratory tests in the outlier policy while reducing the burden associated with the 50 percent rule. We also considered alternatives for applying the wage index budget-neutrality adjustment factor under the ESRD PPS for purposes of the full ESRD PPS payments and ESRD PPS portion of the blended payment during the transition, such as applying the wage index budget-neutrality adjustment factor to the ESRD PPS wage index values. We chose to apply the wage index budget-neutrality adjustment factor to the ESRD PPS base

rate and ESRD PPS portions of the transition blended payment to be consistent with how these adjustments are applied in other Medicare payment systems. Finally, we considered retaining the current BSA adjustment under the composite rate potion of the blended payment amount.

2. End-Stage Renal Disease Quality Incentive Program

a. Effects of the PY 2013 and PY 2014 ESRD QIP

This final rule is intended to mitigate possible reductions in the quality of ESRD dialysis facility services provided to beneficiaries as a result of payment changes under the ESRD PPS by implementing an ESRD QIP that would reduce ESRD payments by up to 2 percent to dialysis providers/facilities that fail to meet or exceed a Total Performance Score with respect to performance standards established by the Secretary with respect to certain specified measures.

The methodology that we are finalizing to determine a provider/facility's Total Performance Score is described in section IV.A.3 (Methodology for Calculating the Total Performance Score for the PY 2013 ESRD QIP) and section IV.A.2.e (Methodology for Calculating the Total Performance Score for the PY 2014 ESRD QIP) of this final rule. Any reductions in ESRD payment would begin on January 1, 2013 for services furnished on or after January 1, 2013 for the PY 2013 ESRD QIP and any reductions in ESRD payment would begin on January 1, 2014 for services furnished on or after January 1, 2014 for the PY 2014 ESRD QIP.

As a result, based on the ESRD QIP outlined in this final rule, we estimate that approximately 19 percent or 1,014 of total ESRD dialysis providers/facilities would likely receive a payment reduction for PY 2013. In PY 2014, we estimate that approximately 30.3 percent or 1,665 of total ESRD facilities would likely receive some type of payment reduction. We note that these estimates differ significantly from the estimates that were included in the proposed rule. We believe that the difference in our PY 2013 estimates is attributable to two changes. First, we determined that our previous estimates for PY 2013 had mistakenly included the Hemoglobin Less Than 10 g/dL measure, which resulted in lower provider/facility scores and greater payment reductions. Second, we are now able to update our PY 2013 estimates using newly available data, such that we are now using 2009 data as the baseline period and 2010 data as the performance period. We believe that the difference in our PY 2014 estimates is attributable to four changes that were made to how we calculated the estimate. First, as previously mentioned, we are now able to update our estimates using newly available data, such that we are now using 2009 data as the baseline period and 2010 data as the performance period. Second, our estimates no longer include performance on the proposed SHR measures, because we are not finalizing its inclusion in the PY 2014 program. Third, our estimate now uses data from the Fistula First Breakthrough Initiative to approximate provider/facility performance on the Vascular Access Type (VAT) measure proposed for the 2014 QIP. The 2014 QIP will use data from Medicare claims based on HCPCS modifier V-codes that indicate fistula or catheter use. Because sufficient historical data are not yet available from Medicare claims for the fistula and catheter rates that will be used to calculate the VAT, historical data regarding fistula and catheter use were obtained from the Fistula First Breakthrough Initiative dataset for use in this impact analysis. For more information on the Fistula First Dataset, please see *http://www.fistulafirst.org.*. Lastly, our estimates incorporate the changes to the proposed payment reduction methodology that have been finalized in this final rule.

The ESRD QIP impact assessment assumes an initial count of 5,596 dialysis providers/facilities with paid Medicare dialysis claims in 2010. The PPS analysis, presented earlier, excludes 93 facilities for PPS-specific reasons thereby narrowing the final analytic sample to 5,503. The most common reason for exclusion was that facilities closed during 2010. As a result, Table 9 shows the overall estimated distribution of payment reductions resulting from the PY 2013 ESRD QIP. Table 10 shows the overall estimated distribution of payment reductions resulting from the PY 2014 ESRD QIP.

Table 9. Estimated Distribution of PY 2013 ESRD QIP Payment Reductions.

Payment Reduction	Number of Facilities	Percent of Facilities
0.0%	4,489	81.6%
1.0%	260	4.7%
1.5%	344	6.3%
2.0%	410	7.5%

Table 10. Estimated Distribution of PY 2014 ESRD QIP Payment Reductions.[25]

Payment Reduction	Number of Facilities	Percent of Facilities
0.0%	3,838	69.7%
0.5%	723	13.1%
1.0%	521	9.5%
1.5%	242	4.4%
2.0%	179	3.3%

To estimate the total payment reductions in PY 2013 and PY 2014 for each provider/facility resulting from this final rule, we multiplied the total Medicare payments to the facility in 2010 by the provider's/facility's estimated payment reduction percentage expected under the ESRD QIP, yielding a total payment reduction amount for each provider/facility: (Total ESRD payment in 2010 × estimated payment reduction percentage).

The PY 2014 payment reduction levels will include the 0.5 percent payment reduction level as an additional level within the payment reduction scale. We are finalizing new measures, a new scoring methodology, and rigorous performance standards which are not familiar to the community. We believe that including this additional payment reduction level will allow time for providers/facilities to become familiar with this new structure and for CMS to acquire additional data on the impact of these changes. The inclusion of the 0.5 percent payment reduction level creates a more gradual payment reduction scale, and therefore benefits providers by lessening the reduction impacts that would have been received under the original proposed scale.

For PY 2013, totaling all of the payment reductions for each of the 1,014 providers/facilities expected to receive a reduction leads to a total payment reduction of approximately $23.7 million. Further, we estimate that the total costs associated with the collection of information requirements described in section III.1, of this final rule (Display of Certificates for the PY 2013 ESRD QIP) would be less than $400,000 for all ESRD providers/facilities in PY 2013.

For PY 2014, totaling all of the payment reductions for each of the 1,665 facilities expected to receive a reduction leads to a total payment reduction of approximately $22.1 million. Further, we estimate that the total costs associated with the collection of information requirements described in sections III.1. (Display of Certificates for the PY 2013 and PY 2014 ESRD QIP), III.2 (NHSN Reporting Requirement for the PY 2014 ESRD QIP), III.3 (Patient Experience Survey Usage Reporting Requirement for the PY 2014 ESRD QIP) and III.4 (Mineral Metabolism Reporting Requirement for the PY 2014 ESRD QIP) of this final rule would be less than $25 million for all ESRD providers/facilities.

As a result, we estimate that ESRD providers/facilities will experience an aggregate impact of $24.1 million for PY 2013 and $47.1 million for PY 2014.

Table 11 below shows the estimated impact of the finalized ESRD QIP payment reductions to all ESRD facilities for PY 2013. The table details the distribution of ESRD providers/facilities by facility size (both among facilities considered to be small entities and by number of treatments per facility), geography (both urban/rural and by region), and by facility type (hospital based/freestanding facilities).

BILLING CODE 4120–01–P

[25] PY 2014 QIP Scores estimated using the Hemoglobin > 12 g/dl and Urea Reduction Ratio ≥ 65 percent measures, as well as data from the Fistula First initiative as a proxy for the VAT measure.

Table 11. Impact of ESRD QIP Payment Reductions to ESRD Facilities for PY 2013

	Number of Facilities	Number of Medicare Treatments 2009 (in millions)	Number of Facilities with QIP Score	Number of Facilities Expected to Receive a Payment Reduction	Payment Reduction (percent change in total ESRD payments)
All Facilities	5,503	40.0	4,962	1,014	-0.29%
Facility Type:					
Freestanding	4943	36.3	4,548	917	-0.29%
Hospital-based	560	3.6	414	97	-0.33%
Ownership Type:					
Large Dialysis	3,544	25.9	3,296	623	-0.27%
Regional Chain	857	6.6	785	171	-0.32%
Independent	663	4.7	568	147	-0.35%
Hospital-based (non-chain)	437	2.8	312	73	-0.32%
Unknown	2	0.0	1	0	-0.00%
Facility Size:					
Large Entities	4,401	32.5	4,081	794	-0.28%
Small Entities[1]	1,100	7.4	880	220	-0.34%
Unknown	2	0.0	1	0	-0.00%
Urban/Rural Status:					
Urban	4,280	33.3	3,842	750	-0.27%
Rural	1,223	6.7	1,120	264	-0.35%
Census Region:					
Northeast	776	6.2	702	132	-0.26%
Midwest	1,311	8.3	1,139	243	-0.29%
South	2,404	17.9	2,221	477	-0.31%
West	968	7.2	862	161	-0.26%
US Territories[2]	39	0.4	38	1	-0.03%
Unknown	5	0.0	0	0	-0.00%
Census Division:					
East North Central	908	6.1	787	159	-0.27%
East South Central	445	3.0	405	87	-0.33%
Middle Atlantic	610	4.9	549	105	-0.27%
Mountain	328	1.9	297	45	-0.22%
New England	167	1.3	153	27	-0.23%
Pacific	641	5.3	565	116	-0.28%
South Atlantic	1,209	9.1	1,129	251	-0.32%
West North Central	405	2.2	352	84	-0.34%
West South Central	751	5.8	687	139	-0.28%
US Territories[2]	39	0.4	38	1	-0.03%

	Number of Facilities	Number of Medicare Treatments 2009 (in millions)	Number of Facilities with QIP Score	Number of Facilities Expected to Receive a Payment Reduction	Payment Reduction (percent change in total ESRD payments)
Facility Size (# of total treatments):					
Less than 4,000 treatments	963	2.1	561	109	-0.20%
4,000-9,999 treatments	2,174	11.2	2,092	427	-0.31%
Over 10,000 treatments	2,318	26.6	2,291	475	-0.31%
Unknown	48	0.1	18	3	-0.16%
[1]Small Entities include hospital-based and satellite facilities, and non-chain facilities based on DFC self-reported status.					
[2]Includes Puerto Rico and Virgin Islands.					

We note that for the PY 2014 ESRD QIP we lack performance data on the Vascular Access Type measure to conduct an analysis at this time. We conducted a simulation using the latest available performance data on the Hemoglobin Greater Than 12 g/dL measure, and the Dialysis Adequacy (URR) measure and fistula and catheter rates based on Fistula First data to estimate the impact of this final rule as accurately as possible. These simulated analyses were performed using 2010 claims data as the performance year and 2009 claims data as the baseline year for the Hemoglobin Greater Than 12g/dL measure and the Dialysis Adequacy Measure (URR).

Using these conditions, we calculated estimated national achievement threshold and benchmark values for the Hemoglobin Greater Than 12 g/dL, URR Hemodilaysis Adequacy, and VAT measures using all facilities present in the data set. Equal weighting was applied in calculating Total Performance Scores. Facilities were required to have data on at least one of the measures. Given the lack of data for the reporting measures, and the use of Fistula First data, the actual impact of the PY 2014 ESRD QIP may vary significantly from the values provided here.

Using the above assumptions, Table 12 below shows the estimated impact of the ESRD QIP payment reductions to all ESRD facilities for PY 2014. The table details the distribution of ESRD providers/facilities by facility size (both among facilities considered to be small entities and by number of treatments per facility), geography (both urban/rural and by region), and by facility type (hospital based/freestanding facilities).

Table 12. Impact of ESRD QIP Payment Reductions to ESRD Facilities for PY 2014

	Number of Facilities	Number of Medicare Treatments 2009 (in millions)	Number of Facilities with QIP Score	Number of Facilities Expected to Receive a Payment Reduction	Payment Reduction (percent change in total ESRD payments)
All Facilities	5,503	40.0	5,343	1,665	-0.29%
Facility Type:					
Freestanding	4943	36.3	4,862	1,449	-0.27%
Hospital-based	560	3.6	481	216	-0.45%
Ownership Type:					
Large Dialysis	3,544	25.9	3,501	1,009	-0.25%
Regional Chain	857	6.6	836	264	-0.31%
Independent	663	4.7	639	219	-0.34%
Hospital-based (non-chain)	437	2.8	366	172	-0.48%
Unknown	2	0.0	1	1	-0.50%
Facility Size:					
Large Entities	4,401	32.5	4,337	1,273	-0.26%
Small Entities[1]	1,100	7.4	1,005	391	-0.39%
Unknown	2	0.0	1	1	-0.50%
Urban/Rural Status:					
Urban	4,280	33.3	4,143	1,292	-0.29%
Rural	1,223	6.7	1,200	373	-0.28%
Census Region:					
Northeast	776	6.2	753	219	-0.28%
Midwest	1,311	8.3	1,256	454	-0.34%
South	2,404	17.9	2,349	721	-0.28%
West	968	7.2	946	254	-0.24%
US Territories[2]	39	0.4	39	17	-0.43%
Unknown	5	0.0	0	0	-0.00%
Census Division:					
East North Central	908	6.1	865	310	-0.34%
East South Central	445	3.0	431	127	-0.24%
Middle Atlantic	610	4.9	591	175	-0.30%
Mountain	328	1.9	323	87	-0.26%
New England	167	1.3	162	44	-0.23%
Pacific	641	5.3	623	167	-0.23%
South Atlantic	1,209	9.1	1,175	361	-0.27%
West North Central	405	2.2	391	144	-0.35%
West South Central	751	5.8	743	233	-0.31%
US Territories[2]	39	0.4	39	17	-0.43%

	Number of Facilities	Number of Medicare Treatments 2009 (in millions)	Number of Facilities with QIP Score	Number of Facilities Expected to Receive a Payment Reduction	Payment Reduction (percent change in total ESRD payments)
Facility Size (# of total treatments):					
Less than 4,000 treatments	963	2.1	837	301	-0.35%
4,000-9,999 treatments	2,174	11.2	2,164	635	-0.28%
Over 10,000 treatments	2,318	26.6	2,318	721	-0.27%
Unknown	48	0.1	24	8	-0.22%
[1]Small Entities include hospital-based and satellite facilities, and non-chain facilities based on DFC self-reported status.					
[2]Includes Puerto Rico and Virgin Islands.					
[3]PY 2014 QIP Scores estimated using the PY 2013 QIP measures Hemoglobin > 12 g/dl and Urea Reduction Ratio ≥ 65%; fistula and catheter rates based on Fistula First Breakthrough Initiative Data.					

BILLING CODE 4120–01–C

b. Alternatives Considered for the PY 2013 and PY 2014 ESRD QIP

In developing the final PY 2013 ESRD QIP, we carefully considered the size of the incentive to providers and facilities to provide high-quality care. We also selected the measures adopted for the PY 2013 ESRD QIP because these measures are important indicators of patient outcomes and quality of care. For example, inadequate dialysis can lead to avoidable hospitalizations, decreased quality of life, and death. Thus, we believe the measures selected will allow CMS to continue focusing on improving the quality of care that Medicare beneficiaries receive from ESRD dialysis providers and facilities.

Additionally, for PY 2013 we considered whether to leave the Hemoglobin Measure Less Than 10g/dL in the program. Ultimately we decided that the clinical evidence shows that this measure is not conducive to improving the patient quality of care for which the ESRD QIP strives. The ESA labeling approved by the FDA on June 24, 2011 states that no trial has identified a hemoglobin target level that does not increase risks, and that ''in controlled trials, patients experienced greater risks for death, serious adverse cardiovascular reactions, and stroke when administered ESAs to target a hemoglobin level of greater than 11 g/dL.'' We decided to retire the Hemoglobin Less Than 10g/dL measure from the program and are finalizing that proposal in this final rule.

This final rule implements an ESRD QIP for Medicare ESRD dialysis providers and facilities with payment reductions beginning January 1, 2013 and January 1, 2014. Under section 1881(h) of the Act, after selecting measures, establishing performance standards that apply to each of the measures, specifying a performance period, and developing a methodology for assessing the total performance of each provider and facility based on the specified performance standards, the Secretary is required to apply an appropriate reduction to ESRD providers and facilities that do not meet or exceed the established Total Performance Score. In developing the final ESRD QIP, we carefully considered the size of the incentive to providers and facilities to provide high-quality care. We also considered finalizing all of the measures proposed for the PY 2014 ESRD QIP because these measures are important indicators of patient outcomes and quality of care. Poor management of anemia and inadequate dialysis, for example, can lead to avoidable hospitalizations, decreased quality of life, and death. Infections are also a leading cause of death and hospitalization among hemodialysis patients, but there are proven infection control methods that have been shown effective in reducing morbidity and mortality. However, after considering public comments, we decided not to finalize all the measures we proposed. While we intend to adopt additional measures in future payment years, we believe that the measures finalized will allow us to continue focusing on improving the quality of care that Medicare beneficiaries receive from ESRD dialysis providers and facilities.

In finalizing the scoring methodology for the PY 2014 ESRD QIP, we considered a number of alternatives, including continuing to use the existing scoring model. In proposing to move to a new scoring approach for the PY 2014 ESRD QIP, we aimed to design a scoring methodology that was straightforward and transparent to providers/facilities, patients, and other stakeholders. During the public comment period, we received comments on the Total Performance Score as proposed, and in light of those concerns, we have adjusted how we set the minimum Total Performance Score. Rather than set the minimum Total Performance Score as the score a provider/facility would receive if it had met the performance standards for each finalized measure, we will define the minimum Total Performance Score as the score a provider/facility would receive if it had met the performance standards for each of the finalized clinical measures. In recognition of commenter concerns regarding the proposed reporting measures, and our lack of data on which to approximate likely provider/facility performance, we will exclude these measures from the calculation of the minimum Total Performance Score. We believe this policy balances our desire to appropriately incentivize improvements to clinical quality of care while ensuring that providers/facilities are not unduly penalized.

Furthermore, although we believe that the ESRD QIP should provide a means for patients to evaluate their providers/facilities over time, we do not believe that PY 2014 will be comparable to previous years of the ESRD QIP because of the significant changes to the scoring methodology and measures. We believe the 100 point scale will accommodate the growing number of measures that may be adopted in future years of the ESRD QIP and plan to consistently use the 100 point scale going forward.

Additionally, we believe that all scoring methodologies for Medicare Value-Based Purchasing programs should be aligned as appropriate given their specific statutory requirements, and that the changes made to the proposed methodology in this final rule are in keeping with this approach.

The comments we received on this analysis and our responses are set forth below.

Comment: One commenter asked CMS to explain why rural and urban facilities will be affected differently by the PY 2013 and PY 2014 ESRD QIP. This commenter specifically asked why those providers/facilities not receiving scores because of, for example, inadequate data varied from PY 2013 to PY 2014. This commenter urged CMS to change its methodology to encompass as many facilities as possible in the ESRD QIP. This commenter also requested the CMS explain why more payment reductions will likely result from PY 2014.

Response: The estimates of the impact for both PY 2013 and PY 2014 of the proposed rule we developed were created by modeling how providers/facilities would have scored on the ESRD QIP using data from 2008 and 2009. While these estimates did show a slight difference in the average payment reduction between urban and rural facilities for PY 2013 and PY 2014, we believe that these differences are relatively minor. While these estimates have changed since we used more recent data (2009 and 2010) and adjusted the model to account for changes to the program in this final rule, we still believe that the differences will be relatively minor. We expect all facilities to provide quality care, particularly in the important areas of anemia management and dialysis adequacy, regardless of size or geographic location. We will continue to monitor and evaluate the impact of the ESRD QIP on access to and quality to care and the quality of care received by Medicare ESRD beneficiaries, including indicators of facility financial health, to identify any disruptions or to make future improvements in the program. In light of our finalized proposal that every provider/facility will receive a Total Performance Score as long as at least one measure applies to it, we believe that nearly all providers/facilities will be included in the ESRD QIP. Lastly, we do not believe that payment reductions will be significantly greater in PY 2014. As seen from the estimates above, we believe that payment reductions will be $23.7 million for PY 2013 and $22.1 million for PY 2014. To the extent that this number decreases somewhat in PY 2014, we believe this is appropriate given that providers/facilities will be adjusting to a dramatically different program with new measures.

3. Ambulance Fee Schedule

Section 106 of the Medicare and Medicaid Extenders Act of 2010 (MMEA)

As discussed in section III of this final rule, section 106 of the MMEA requires the extension of certain add-on payments for ground ambulance services, and the extension of certain rural area designations for purposes of air ambulance payment, through CY 2011. As further discussed in section III of this final rule, we are amending the Medicare program regulations to conform the regulations to this section of the MMEA. This MMEA section is essentially prescriptive and does not allow for discretionary alternatives on the part of the Secretary.

As discussed in the July 1, 2004 interim final rule (69 FR 40288), in determining the super-rural bonus amount under section 1834(l)(12) of the Act, we followed the statutory guidance of using the data from the Comptroller General (GAO) of the U.S. We obtained the same data that were used in the GAO's September 2003 Report titled, ''Ambulance Services: Medicare Payments Can Be Better Targeted to Trips in Less Densely Populated Rural Areas'' (GAO report number GAO–03–986) and used the same general methodology in a regression analysis as was used in that report. The result was that the average cost per trip in the lowest quartile of rural county populations was 22.6 percent higher than the average cost per trip in the highest quartile. As required by section 1834(l)(12) of the Act, this percent increase is applied to the base rate for ground ambulance transports that originate in qualified rural areas, which were identified using the methodology set forth in the statute. Payments for ambulance services under Medicare are determined by the point of pick-up (by zip code area) where the beneficiary is loaded on board the ambulance.

We determined that ground ambulance transports originating in 7,842 zip code areas (which were determined to be in ''qualified rural areas'') out of 42,879 zip code areas, according to the July 2010 zip code file, will realize increased base rate payments under section 106(c) of the MMEA for CY 2011; however, the number and level of services that might occur in these areas for CY 2011 is unknown at this time. Similarly, for purposes of assessing the impact of MMEA section 106(a) and (b), the number and level of services that might occur during CY 2011 in rural and urban areas generally is unknown at this time. While many elements may factor into the final impact of section 106 of the MMEA, our Office of the Actuary (OACT) estimates the impact of this section to be $20 million for CY 2011.

4. Durable Medical Equipment (DME) and Supplies

The fiscal impact of the final 3-year MLR for DME will be minimal because we believe that this standard is consistent with our current interpretation of the payment and repeated use provisions for DME. It is difficult to predict how many different types of new devices will be introduced in the market in the future that may or may not meet the 3-year MLR. However, even absent the final rule, it is likely that new products which do not meet the 3-year MLR will not qualify as DME based upon our current interpretation of the criteria for DME. It is possible that with the clarification of the 3-year MLR, we will limit what can be covered as DME compared to what we would have covered as DME absent this regulatory clarification. To the extent the regulatory change is binding to some new products, there may be reduced program cost. Also, the final revised regulation does not apply to items that were classified as DME before the effective date of the amended regulation, which tends to lessen the overall impact to the program. In general, we expect that this final will have a small, if any, savings impact on the program. We are finalizing the rule with no modifications.

5. The Competitive Acquisition Program for Certain Durable Medical Equipment, Prosthetics, Orthotics and Supplies (DMEPOS)

As discussed in section V of this final rule, section 154 of MIPPA amended section 1847 of the Act to make limited changes to the Medicare DMEPOS Competitive Bidding Program. These changes were incorporated into regulations through an interim final rule with comment period published in the **Federal Register** on January 16, 2009 (74 FR 2873). The interim final rule merely incorporated limited statutory changes to the Medicare DMEPOS Competitive Bidding Program and did not change the fundamental requirements of the program. Specifically, this final rule cites the new timeframes for competition under the program. In addition, the rule implements the MIPPA provisions that mandated limited changes that affected

competition under the program including a process for providing feedback to suppliers regarding missing financial documentation, requiring contractors to disclose to CMS information regarding subcontracting relationships, and exempting from competitive bidding certain items and services. These changes are not economically significant. Furthermore, because the regulation simply codifies the MIPPA provisions, we do not have the authority to consider alternatives.

C. Accounting Statement

As required by OMB Circular A–4 (available at *http://www.whitehouse.gov/omb/circulars_a004_a-4*), in Table 13 below, we have prepared an accounting statement showing the classification of the transfers and costs associated with the various provisions of this final rule.

BILLING CODE 4120–01–P

TABLE 13: Accounting Statement: Classification of Estimated Transfers and Costs ESRD PPS for CY 2012	
Category	**Transfers**
Annualized Monetized Transfers	$190 million
From Whom to Whom	Federal Government to ESRD providers
Category	**Transfers**
Increased Beneficiary Co-insurance Payments	$50 million
ESRD QIP for PYs 2013 and 2014	
Category	**Transfers**
Annualized Monetized Transfers at the 7% Discount Rate	-$31.2 million
Annualized Monetized Transfers at the 3% Discount Rate	-$30.9 million
From Whom to Whom	Federal Government to ESRD providers
Category	**Costs**
Annualized Monetized ESRD Provider Costs at the 7% Discount Rate	$12.3 million
Annualized Monetized ESRD Provider Costs at the 7% Discount Rate	$12.5 million
Ambulance Fee Schedule for CY 2011	
Category	**Transfers**
Annualized Monetized Transfers	$20 million
From Whom to Whom	Federal Government to Medicare Ambulance Providers
Durable Medical Equipment (DME) and Supplies	
Category	**Transfers**
Annualized Monetized Transfers	Impact of the 3-year minimum lifetime requirement (MLR) will result in a reduction in payments
From Whom to Whom	From Federal Government to DME suppliers

BILLING CODE 4120–C

VIII. Regulatory Flexibility Act Analysis

The Regulatory Flexibility Act (September 19, 1980, Pub. L. 96–354)(RFA) requires agencies to analyze options for regulatory relief of small entities, if a rule has a significant impact on a substantial number of small entities. For purposes of the RFA, small entities include small businesses, nonprofit organizations, and small governmental jurisdictions. Approximately 20 percent of ESRD dialysis facilities are considered small entities according to the Small Business Administration's size standards, which classifies small businesses as those dialysis facilities having total revenues of less than $34.5 million in any 1 year. Individuals and States are not included in the definitions of a small entity and 17 percent of dialysis facilities are nonprofit organizations. For more information on SBA's size standards, see the Small Business Administration's Web site at *http://sba.gov/idc/groups/public/documents/sba_homepage/serv_sstd_tablepdf.pdf* (Kidney Dialysis

Centers are listed as 621492 with a size standard of $34.5 million).

The claims data used to estimate payments to ESRD facilities in this RFA and RIA do not identify which dialysis facilities are part of a large dialysis organization (LDO), regional chain, or other type of ownership. Each individual dialysis facility has its own provider number and bills Medicare using this number. Therefore, in previous RFAs and RIAs presented in proposed and final rules that updated the basic case-mix adjusted composite payment system, we considered each ESRD to be a small entity for purposes of the RFA. However, we conducted a special analysis for this final rule that enabled us to identify the ESRD facilities that are part of an LDO or regional chain and therefore, were able to identify individual ESRD facilities, regardless of ownership, that would be considered small entities.

We do not believe ESRD facilities are operated by small government entities such as counties or towns with populations 50,000 or less and therefore, they are not enumerated or included in this estimated RFA. Individuals and States are not included in the definition of a small entity.

For purposes of the RFA, we estimate that approximately 20 percent of ESRD facilities are small entities as that term is used in the RFA (which includes small businesses, nonprofit organizations, and small governmental jurisdictions). This amount is based on the number of ESRD facilities shown in the ownership category in the impact Table 12. Using the definitions in this ownership category, we consider the 663 facilities that are independent and the 437 facilities that are shown as hospital-based to be small entities. The ESRD facilities that are owned and operated by LDOs and regional chains would have total revenues more than $34.5 million in any year when the total revenues for all locations are combined for each business (individual LDO or regional chain) are not included as small entities.

For the ESRD PPS updates finalized in this rule, a hospital-based ESRD facility (as defined by ownership type) is estimated to receive a 2.3 percent increase in payments for CY 2012. An independent facility (as defined by ownership type) is estimated to receive a 2.3 percent increase in payments for 2012.

Based on the finalized QIP payment reduction impacts to ESRD facilities for PY 2013, we estimate that of the 2,059 ESRD facilities expected to receive a payment reduction, 385 ESRD small entity facilities would experience a payment reduction (ranging from 0.5 percent up to 2.0 of total payments), as presented in Table 11 above. We anticipate the payment reductions to average approximately $22,934 per facility, with an average of $23,807 per small entity. Using our projections of provider/facility performance, we then estimated the impact of anticipated payment reductions on ESRD small entities, by comparing the total payment reductions for the 385 small entities expected to receive a payment reduction, with the aggregate ESRD payments to all small entities. For the entire group of 1,054 ESRD small entity facilities, a decrease of 0.57 percent in aggregate ESRD payments is observed.

Furthermore, based on the finalized QIP payment reduction impacts to ESRD facilities for PY 2014, we estimate that of the 737 ESRD entity facilities expected to receive a payment reduction, 132 small entities are expected to experience a payment reduction (ranging from 1.0 percent up to 2.0 of total payments), as presented in Table 11 above. We anticipate the payment reductions to average approximately $18,820 per facility, with an average of $20,436 per small entity facility. Using our projections of provider/facility performance, we then estimated the impact of anticipated payment reductions on small entities, by comparing the total payment reductions for the 132 small entities expected to receive a payment reduction, with the aggregate ESRD payments to all small entities. For the entire group of 1,054 small entity facilities, a decrease of 0.16 percent in aggregate ESRD payments is observed.

Therefore, the Secretary has determined that this final rule will not have a significant economic impact on a substantial number of small entities. We solicit comment on the RFA analysis provided.

Finally, based on data from the Small Business Administration (SBA), we estimate that 85 percent of the suppliers of the items and services affected by the changes to the Medicare DMEPOS Competitive Bidding Program would be defined as small entities with total revenues of $6.5 million or less in any 1 year. This final rule merely codifies MIPPA provisions, so there are no options for regulatory relief for small suppliers. The RFA therefore does not require that we analyze regulatory options in this instance.

In addition, section 1102(b) of the Act requires us to prepare a regulatory impact analysis if a rule may have a significant impact on the operations of a substantial number of small rural hospitals. Any such regulatory impact analysis must conform to the provisions of section 604 of the RFA. For purposes of section 1102(b) of the Act, we define a small rural hospital as a hospital that is located outside of a metropolitan statistical area and has fewer than 100 beds. We do not believe this final rule will have a significant impact on operations of a substantial number of small rural hospitals because most dialysis facilities are freestanding. While there are 178 rural hospital-based dialysis facilities, we do not know how many of them are based at hospitals with fewer than 100 beds. However, overall, the 178 rural hospital-based dialysis facilities will experience an estimated 2.3 percent increase in payments. As a result, this final rule is estimated to not have a significant impact on small rural hospitals. Therefore, the Secretary has determined that this proposed rule will not have a significant impact on the operations of a substantial number of small rural hospitals.

IX. Unfunded Mandates Reform Act Analysis

Section 202 of the Unfunded Mandates Reform Act of 1995 (UMRA) (Pub. L. 104–4) also requires that agencies assess anticipated costs and benefits before issuing any rule whose mandates require spending in any 1 year $100 million in 1995 dollars, updated annually for inflation. In 2011, that threshold is approximately $136 million. This final rule does not include any mandates that would impose spending costs on State, local, or Tribal governments in the aggregate, or by the private sector, of $136 million.

X. Federalism Analysis

Executive Order 13132 on Federalism (August 4, 1999) establishes certain requirements that an agency must meet when it promulgates a final rule (and subsequent final rule) that imposes substantial direct requirement costs on State and local governments, preempts State law, or otherwise has Federalism implications. We have reviewed this final rule under the threshold criteria of Executive Order 13132, Federalism, and have determined that it will not have substantial direct effects on the rights, roles, and responsibilities of States, local or Tribal governments.

XI. Files Available to the Public via the Internet

This section lists the Addenda referred to in the preamble of this final. Beginning in CY 2012, the Addenda for the annual ESRD PPS proposed and final rulemakings will no longer appear in the **Federal Register**. Instead, the

Addenda will be available only through the Internet. We will continue to post the Addenda through the Internet.

Readers who experience any problems accessing the Addenda that are posted on the CMS Web site at *http://www.cms.gov/ESRDPayment/PAY/list.asp*, should contact Lisa Hubbard at (410) 786–4533.

List of Subjects

42 CFR Part 413

Health facilities, Kidney diseases, Medicare, Reporting and recordkeeping requirements.

42 CFR Part 414

Proposed Rule to revise the definition of durable medical equipment (DME) to incorporate a minimum lifetime standard of 3 years and further refine the meaning of the term durable.

For the reasons set forth in the preamble, under the authority at 42 U.S.C. 1395hh section 1871 of the Act, the Centers for Medicare & Medicaid Services confirms as final, the interim final rules published on January 16, 2009 (74 FR 2873), and April 6, 2011 (76 FR 18930), and further amends 42 CFR chapter IV as set forth below:

PART 413—PRINCIPLES OF REASONABLE COST REIMBURSEMENT; PAYMENT FOR END-STAGE RENAL DISEASE SERVICES; OPTIONAL PROSPECTIVELY DETERMINED PAYMENT RATES FOR SKILLED NURSING FACILITIES

■ 1. The authority citation for part 413 continues to read as follows:

Authority: Secs. 1102, 1812(d), 1814(b), 1815, 1833(a), (i), and (n), 1861(v), 1871, 1881, 1883, and 1886 of the Social Security Act (42 U.S.C. 1302, 1395d(d), 1395f(b), 1395(g), 1395I(a), (i), and (n), 1395x(v), 1395hh, 1395rr, 1395tt, and 1395ww); and sec. 124 of Public Law 106–113 (133 stat. 1501A–332).

■ 2. Section 413.232 is amended by revising paragraphs (b)(1), (b)(2), and (f) to read as follows:

§ 413.232 Low-volume adjustment.

(a) * * *

(b) * * *

(1) Furnished less than 4,000 treatments in each of the 3 cost reporting years (based on as-filed or final settled 12-consecutive month cost reports, whichever is most recent) preceding the payment year; and

(2) Has not opened, closed, or received a new provider number due to a change in ownership in the 3 cost reporting years (based on as-filed or final settled 12-consecutive month cost reports, whichever is most recent) preceding the payment year.

* * * * *

(f) Except as provided below, to receive the low-volume adjustment an ESRD facility must provide an attestation statement, by November 1st of each year preceding the payment year, to its Medicare administrative contractor that the facility has met all the criteria established in paragraphs (a), (b), (c), and (d) of this section. For calendar year 2012, the attestation must be provided by January 3, 2012.

* * * * *

■ 3. Section 413.237 is amended by adding a new paragraph (a)(1)(v) to read as follows:

§ 413.237 Outliers.

(a) * * *

(1) * * *

(v) As of January 1, 2012, the laboratory tests that comprise the Automated Multi-Channel Chemistry panel are excluded from the definition of outlier services.

* * * * *

PART 414—PAYMENT FOR PART B MEDICAL AND OTHER HEALTH SERVICES

■ 4. The authority citation for part 414 continues to read as follows:

Authority: Secs. 1102, 1871, and 1881(b)(l) of the Social Security Act (42 U.S.C. 1302, 1395hh, and 1395rr(b)(l)).

Subpart D—Payment for Durable Medical Equipment and Prosthetic and Orthotic Devices

■ 5. Section 414.202 is amended by revising the definition of ''durable medical equipment'' to read as follows:

§ 414.202 Definitions.

* * * * *

Durable medical equipment means equipment, furnished by a supplier or a home health agency that meets the following conditions:

(1) Can withstand repeated use.

(2) Effective with respect to items classified as DME after January 1, 2012, has an expected life of at least 3 years.

(3) Is primarily and customarily used to serve a medical purpose.

(4) Generally is not useful to an individual in the absence of an illness or injury.

(5) Is appropriate for use in the home.

* * * * *

Subpart F—Competitive Bidding for Certain Durable Medical Equipment, Prosthetics, Orthotics, and Supplies (DMEPOS)

■ 6. Section 414.402 is amended by—

■ A. Revising the definitions of ''covered document'' and ''covered document review date'' and ''hospital''.

■ B. Revising the introductory text of paragraph (1) of the definition of ''item''.

§ 414.402 Definitions.

* * * * *

Covered document means a financial, tax, or other document required to be submitted by a bidder as part of an original bid submission under a competitive acquisition program in order to meet the required financial standards.

Covered document review date means the later of—

(1) The date that is 30 days before the final date for the closing of the bid window; or

(2) The date that is 30 days after the opening of the bid window.

* * * * *

Hospital has the same meaning as in section 1861(e) of the Act.

Item * * *

(1) Durable medical equipment (DME) other than class III devices under the Federal Food, Drug and Cosmetic Act, as defined in § 414.202 of this part and group 3 complex rehabilitative wheelchairs and further classified into the following categories:

* * * * *

■ 7. Section 414.404 is amended by revising paragraphs (b)(1) introductory text, (b)(1)(ii), and (b)(1)(iii) to read as follows:

§ 414.404 Scope and applicability.

* * * * *

(b) * * *

(1) Physicians, treating practitioners, and hospitals may furnish certain types of competitively bid durable medical equipment without submitting a bid and being awarded a contract under this subpart, provided that all of the following conditions are satisfied:

* * * * *

(ii) The items are furnished by the physician or treating practitioner to his or her own patients as part of his or her professional service or by a hospital to its own patients during an admission or on the date of discharge.

(iii) The items are billed under a billing number assigned to the hospital, physician, the treating practitioner (if possible), or a group practice to which the physician or treating practitioner

has reassigned the right to receive Medicare payment.

* * * * *

■ 8. Section 414.408 is amended by revising paragraph (e)(2)(iv) to read as follows:

§ 414.408 Payment rules.

* * * * *

(e) * * *

(2) * * *

(iv) A physician, treating practitioner, physical therapist in private practice, occupational therapist in private practice, or hospital may furnish an item in accordance with § 414.404(b) of this subpart.

* * * * *

■ 9. Section 414.410 is amended by revising paragraphs (a)(1) through (3) to read as follows:

§ 414.410 Phased-in implementation of competitive bidding programs.

(a) *Phase-in of competitive bidding programs.* CMS phases in competitive bidding programs so that competition under the programs occurs—

(1) In CY 2009, in Cincinnati—Middletown (Ohio, Kentucky and Indiana), Cleveland—Elyria—Mentor (Ohio), Charlotte—Gastonia—Concord (North Carolina and South Carolina), Dallas—Fort Worth—Arlington (Texas), Kansas City (Missouri and Kansas), Miami—Fort Lauderdale—Miami Beach (Florida), Orlando (Florida), Pittsburgh (Pennsylvania), and Riverside—San Bernardino—Ontario (California).

(2) In CY 2011, in an additional 91 MSAs (the additional 70 MSAs selected by CMS as of June 1, 2008, and the next 21 largest MSAs by total population based on 2009 population estimates, and not already phased in as of June 1, 2008). CMS may subdivide any of the 91 MSAs with a population of greater than 8,000,000 into separate CBAs, thereby resulting in more than 91 CBAs.

(3) After CY 2011, additional CBAs (or, in the case of national mail order for items and services, after CY 2010).

* * * * *

■ 10. Section 414.414 is amended by revising paragraph (c) and (d) as follows:

§ 414.414 Conditions for awarding contracts.

* * * * *

(c) Quality standards and accreditation. Each supplier furnishing items and services directly or as a subcontractor must meet applicable quality standards developed by CMS in accordance with section 1834(a)(20) of the Act and be accredited by a CMS-approved organization that meets the requirements of § 424.58 of this subchapter, unless a grace period is specified by CMS.

(d) *Financial standards.* (1) *General rule.* Each supplier must submit along with its bid the applicable covered documents (as defined in § 414.402) specified in the request for bids.

(2) *Process for reviewing covered documents.* (i) *Submission of covered documents for CMS review.* To receive notification of whether there are missing covered documents, the supplier must submit its applicable covered documents by the later of the following covered document review dates:

(A) The date that is 30 days before the final date for the closing of the bid window; or

(B) The date that is 30 days after the opening of the bid window.

(ii) *CMS feedback to a supplier with missing covered documents.* (A) *For Round 1 bids.* CMS has up to 45 days after the covered document review date to review the covered documents and to notify suppliers of any missing documents.

(B) *For subsequent Round bids.* CMS has 90 days after the covered document review date to notify suppliers of any missing covered documents.

(iii) *Submission of missing covered documents.* Suppliers notified by CMS of missing covered documents have 10 business days after the date of such notice to submit the missing documents. CMS does not reject the supplier's bid on the basis that the covered documents are late or missing if all the applicable missing covered documents identified in the notice are submitted to CMS not later than 10 business days after the date of such notice.

* * * * *

■ 11. Section 414.422 is amended by revising paragraph (f) to read as follows:

§ 414.422 Terms of contracts.

* * * * *

(f) *Disclosure of subcontracting arrangements.* (1) *Initial disclosure.* Not later than 10 days after the date a supplier enters into a contract under this section the supplier must disclose information on both of the following:

(i) Each subcontracting arrangement that the supplier has in furnishing items and services under the contract.

(ii) Whether each subcontractor meets the requirement of section 1834(a)(20)(F)(i) of the Act if applicable to such subcontractor.

(2) *Subsequent disclosure.* Not later than 10 days after the date a supplier enters into a subcontracting arrangement subsequent to contract award with CMS, the supplier must disclose information on both of the following:

(i) The subcontracting arrangement that the supplier has in furnishing items and services under the contract.

(ii) Whether the subcontractor meets the requirement of section 1834(a)(20)(F)(i) of the Act, if applicable to such subcontractor.

* * * * *

Subpart H—Fee Schedule for Ambulance Services

■ 12. Section 414.610 is amended by revising paragraphs (c)(1) introductory text, (c)(1)(ii), (c)(5)(ii), and (h) to read as follows:

§ 414.610 Basis of payments.

* * * * *

(c) * * *

(1) *Ground ambulance service levels.* The CF is multiplied by the applicable RVUs for each level of service to produce a service-level base rate.

* * * * *

(ii) For services furnished during the period July 1, 2008 through December 31, 2011, ambulance services originating in—

* * * * *

(5) * * *

(ii) For services furnished during the period July 1, 2004 through December 31, 2011, the payment amount for the ground ambulance base rate is increased by 22.6 percent where the point of pickup is in a rural area determined to be in the lowest 25 percent of rural population arrayed by population density. The amount of this increase is based on CMS's estimate of the ratio of the average cost per trip for the rural areas in the lowest quartile of population compared to the average cost per trip for the rural areas in the highest quartile of population. In making this estimate, CMS may use data provided by the GAO.

* * * * *

(h) *Treatment of certain areas for payment for air ambulance services.* Any area that was designated as a rural area for purposes of making payments under the ambulance fee schedule for air ambulance services furnished on December 31, 2006, must be treated as a rural area for purposes of making payments under the ambulance fee schedule for air ambulance services furnished during the period July 1, 2008, through December 31, 2011.

(Catalog of Federal Domestic Assistance Program No. 93.773, Medicare—Hospital Insurance; and Program No. 93.774, Medicare—Supplementary Medical Insurance Program)

Dated: October 26, 2011.

Donald M. Berwick,

Administrator, Centers for Medicare & Medicaid Services.

Approved: October 31, 2011.

Kathleen Sebelius,

Secretary, Department of Health and Human Services.

[FR Doc. 2011–28606 Filed 11–1–11; 4:15 pm]

BILLING CODE 4120–01–P

FEDERAL REGISTER

Vol. 76 Thursday,

No. 218 November 10, 2011

Part III

The President

Notice of November 9, 2011—Continuation of the National Emergency With Respect to Weapons of Mass Destruction

Federal Register
Vol. 76, No. 218
Thursday, November 10, 2011

Presidential Documents

Title 3—

The President

Notice of November 9, 2011

Continuation of the National Emergency With Respect to Weapons of Mass Destruction

On November 14, 1994, by Executive Order 12938, the President declared a national emergency with respect to the unusual and extraordinary threat to the national security, foreign policy, and economy of the United States posed by the proliferation of nuclear, biological, and chemical weapons (weapons of mass destruction) and the means of delivering such weapons. On July 28, 1998, the President issued Executive Order 13094 amending Executive Order 12938 to respond more effectively to the worldwide threat of weapons of mass destruction proliferation activities. On June 28, 2005, the President issued Executive Order 13382 which, *inter alia*, further amended Executive Order 12938 to improve our ability to combat proliferation. The proliferation of weapons of mass destruction and the means of delivering them continues to pose an unusual and extraordinary threat to the national security, foreign policy, and economy of the United States; therefore, the national emergency first declared on November 14, 1994, and extended in each subsequent year, must continue. In accordance with section 202(d) of the National Emergencies Act (50 U.S.C. 1622(d)), I am continuing for 1 year the national emergency declared in Executive Order 12938, as amended.

This notice shall be published in the *Federal Register* and transmitted to the Congress.

THE WHITE HOUSE,
November 9, 2011.

[FR Doc. 2011–29458
Filed 11–9–11; 2:00 pm]
Billing code 3295–F2–P

Reader Aids

Federal Register

Vol. 76, No. 218

Thursday, November 10, 2011

CUSTOMER SERVICE AND INFORMATION

Federal Register/Code of Federal Regulations	
General Information, indexes and other finding aids	**202–741–6000**
Laws	**741–6000**
Presidential Documents	
Executive orders and proclamations	**741–6000**
The United States Government Manual	**741–6000**
Other Services	
Electronic and on-line services (voice)	**741–6020**
Privacy Act Compilation	**741–6064**
Public Laws Update Service (numbers, dates, etc.)	**741–6043**
TTY for the deaf-and-hard-of-hearing	**741–6086**

ELECTRONIC RESEARCH

World Wide Web

Full text of the daily Federal Register, CFR and other publications is located at: **www.fdsys.gov.**

Federal Register information and research tools, including Public Inspection List, indexes, and links to GPO Access are located at: **www.ofr.gov.**

E-mail

FEDREGTOC-L (Federal Register Table of Contents LISTSERV) is an open e-mail service that provides subscribers with a digital form of the Federal Register Table of Contents. The digital form of the Federal Register Table of Contents includes HTML and PDF links to the full text of each document.

To join or leave, go to **http://listserv.access.gpo.gov** and select *Online mailing list archives, FEDREGTOC-L, Join or leave the list (or change settings);* then follow the instructions.

PENS (Public Law Electronic Notification Service) is an e-mail service that notifies subscribers of recently enacted laws.

To subscribe, go to **http://listserv.gsa.gov/archives/publaws-l.html** and select *Join or leave the list (or change settings);* then follow the instructions.

FEDREGTOC-L and **PENS** are mailing lists only. We cannot respond to specific inquiries.

Reference questions. Send questions and comments about the Federal Register system to: **fedreg.info@nara.gov**

The Federal Register staff cannot interpret specific documents or regulations.

Reminders. Effective January 1, 2009, the Reminders, including Rules Going Into Effect and Comments Due Next Week, no longer appear in the Reader Aids section of the Federal Register. This information can be found online at **http://www.regulations.gov.**

CFR Checklist. Effective January 1, 2009, the CFR Checklist no longer appears in the Federal Register. This information can be found online at **http://bookstore.gpo.gov/.**

FEDERAL REGISTER PAGES AND DATE, NOVEMBER

67315–67580 1
67581–68056 2
68057–68296 3
68297–68624 4
68625–69082 7
69083–69600 8
69601–70036 9
70037–70320 10

CFR PARTS AFFECTED DURING NOVEMBER

At the end of each month the Office of the Federal Register publishes separately a List of CFR Sections Affected (LSA), which lists parts and sections affected by documents published since the revision date of each title.

3 CFR

Proclamations:
8742 68273
8743 68611
8744 68613
8745 68615
8746 68617
8747 68619
8748 68621
8749 68623
8750 68625
8751 69081

Executive Orders:
13588 68295

Administrative Orders:
Memorandums:
Memorandums of October 28, 2011 68049
Notices:
Notice of November 1, 2011 68055
Notice of November 7, 2011 70035
Notice of November 9, 2011 70319

5 CFR

530 68631
531 68631
536 68631
731 69601
Ch. III 70037

6 CFR

Proposed Rules:
5 67621

7 CFR

275 67315
319 .....67581, 68057
958 67317
984 67320
1205 69083
1214 .....69094, 69110
2502 69114

Proposed Rules:
205 69141
319 67379
930 69673
987 69678
2502 69146

8 CFR

103 69119

9 CFR

93 70037
94 70037
98 70037
381 68058

Proposed Rules:
319 69146
381 69146

10 CFR

40 69120
431 69122

Proposed Rules:
51 70067
429 69870
430 .....69147, 69870
609 67622
950 67622

12 CFR

204 68064
243 67323
381 67323
701 67583
705 67583
741 67583

Proposed Rules:
44 68846
248 68846
351 68846
1290 70069

13 CFR

Proposed Rules:
121 69154
124 69154
125 69154
126 69154
127 69154

14 CFR

39 .....67341, 67343, 67346, 67591, 67594, 68297, 68299, 68301, 68304, 68306, 68634, 68636, 69123, 70040, 70042, 70044, 70046
71 .....67596, 69608, 70051
73 69125
97 .....70053, 70055

Proposed Rules:
39 .....67625, 67628, 67631, 67633, 68366, 68368, 68660, 68661, 68663, 68666, 68668, 68671, 69155, 69157, 69159, 69161, 69163, 69166, 69168, 69685
71 68674
183 69171

15 CFR

748 69609
902 68310
922 67348

Proposed Rules:
738 68675
740 68675
742 68675
770 68675
772 68675

774 68675

16 CFR

1107 69586
1109 69546
Proposed Rules:
303 68690
Ch. II 69596
1107 69482

17 CFR

1 69334
21 69334
39 69334
140 69334
200 67597
Proposed Rules:
255 68846

19 CFR

4 68066
10 68067
24 68067
162 68067
163 68067
178 68067
Proposed Rules:
101 69688

21 CFR

Proposed Rules:
866 69034

22 CFR

42 67361
123 68311
126 ....68313, 69612
Proposed Rules:
121 68694

24 CFR

17 69044

26 CFR

20 69126
31 67363
301 ....67363, 70057
Proposed Rules:
1 ....68119, 68370, 68373, 69172, 69188
31 67384
301 67384
602 68119

27 CFR

Proposed Rules:
4 68373
9 69198

29 CFR

1980 68084

30 CFR

Proposed Rules:
75 70075
902 67635
948 67637

31 CFR

Proposed Rules:
1010 69204
1030 69204

32 CFR

706 68097
1701 67599
Proposed Rules:
165 68376

33 CFR

100 ....68314, 69613, 69622
117 ....68098, 69131, 69632, 69633
165 ....68098, 68101, 69131, 69613, 69622, 69634
Proposed Rules:
135 67385
136 67385
167 67395

37 CFR

2 69132
7 69132

38 CFR

Proposed Rules:
51 70076

40 CFR

9 69134
52 ....67366, 67369, 67600, 68103, 68106, 68317, 68638, 69052, 69135, 69896, 69928
180 ....69636, 69642, 69648, 69653, 69659, 69662
300 70057
372 69136
Proposed Rules:
52 ....67396, 67640, 68378, 68381, 68385, 68698, 68699, 69214, 69217, 70078, 70091
81 ....70078, 70091
180 ....69680, 69692, 69693
300 70105

41 CFR

101–26 67370
102–39 67371

42 CFR

Ch. IV 67992
409 68526
413 70228
414 70228
424 68526
425 67802
484 68526
Ch. V 67992

44 CFR

64 67372
65 ....68322, 68325
67 ....68107, 69665

45 CFR

1307 70010

46 CFR

160 70062
180 70062
199 70062

47 CFR

1 68641
2 67604
43 68641
64 ....68116, 68328, 68642
73 ....67375, 68117
79 ....67366, 67377, 68117
80 67604
Proposed Rules:
73 ....67397, 68124, 69222
79 67397

48 CFR

Ch. 1 ....68014, 68044, 70037
1 ....68015, 68017, 68043
2 ....68015, 68026
3 68017
4 ....68027, 68028, 68043
8 ....68032, 68043
12 ....68017, 68032
16 68032
19 ....68026, 68032
22 68015
25 ....68027, 68028, 68037, 68039
31 68040
38 68032
52 ....68015, 68026, 68027, 68028, 68032, 68039
Proposed Rules:
204 70106
252 70106

49 CFR

242 69802
384 68328
Proposed Rules:
633 67400

50 CFR

300 ....67401, 68332, 70062
622 ....67618, 68310, 68339, 69136
635 ....69137, 69139, 70064
648 ....68642, 68657
660 ....68349, 68658
679 ....68354, 68658
680 68358
Proposed Rules:
17 ....67401, 68393
21 ....67650, 69223, 69225
92 68264
223 67652
224 67652
226 68710
622 ....67656, 68711, 69230

LIST OF PUBLIC LAWS

This is a continuing list of public bills from the current session of Congress which have become Federal laws. It may be used in conjunction with "P L U S" (Public Laws Update Service) on 202–741–6043. This list is also available online at *http://www.archives.gov/federal-register/laws*.

The text of laws is not published in the **Federal Register** but may be ordered in "slip law" (individual pamphlet) form from the Superintendent of Documents, U.S. Government Printing Office, Washington, DC 20402 (phone, 202–512–1808). The text will also be made available on the Internet from GPO's Federal Digital System (FDsys) at *http://www.gpo.gov/fdsys*. Some laws may not yet be available.

H.R. 489/P.L. 112–45

To clarify the jurisdiction of the Secretary of the Interior with respect to the C.C. Cragin Dam and Reservoir, and for other purposes. (Nov. 7, 2011; 125 Stat. 535)

H.R. 765/P.L. 112–46

Ski Area Recreational Opportunity Enhancement Act of 2011 (Nov. 7, 2011; 125 Stat. 538)

H.R. 1843/P.L. 112–47

To designate the facility of the United States Postal Service located at 489 Army Drive in Barrigada, Guam, as the "John Pangelinan Gerber Post Office Building". (Nov. 7, 2011; 125 Stat. 541)

H.R. 1975/P.L. 112–48

To designate the facility of the United States Postal Service located at 281 East Colorado Boulevard in Pasadena, California, as the "First Lieutenant Oliver Goodall Post Office Building". (Nov. 7, 2011; 125 Stat. 542)

H.R. 2062/P.L. 112–49

To designate the facility of the United States Postal Service located at 45 Meetinghouse Lane in Sagamore Beach, Massachusetts, as the "Matthew A. Pucino Post Office". (Nov. 7, 2011; 125 Stat. 543)

H.R. 2149/P.L. 112–50

To designate the facility of the United States Postal Service located at 4354 Pahoa Avenue in Honolulu, Hawaii, as the "Cecil L. Heftel Post Office Building". (Nov. 7, 2011; 125 Stat. 544)

Last List October 25, 2011

Public Laws Electronic Notification Service (PENS)

PENS is a free electronic mail notification service of newly enacted public laws. To subscribe, go to *http://listserv.gsa.gov/archives/publaws-l.html*

Note: This service is strictly for E-mail notification of new laws. The text of laws is not available through this service. **PENS** cannot respond to specific inquiries sent to this address.