AUTHENTICATED
U.S. GOVERNMENT
INFORMATION
GPO

FEDERAL REGISTER

Vol. 76 Friday,

No. 232 December 2, 2011

Pages 75427–75770

OFFICE OF THE FEDERAL REGISTER

The **FEDERAL REGISTER** (ISSN 0097–6326) is published daily, Monday through Friday, except official holidays, by the Office of the Federal Register, National Archives and Records Administration, Washington, DC 20408, under the Federal Register Act (44 U.S.C. Ch. 15) and the regulations of the Administrative Committee of the Federal Register (1 CFR Ch. I). The Superintendent of Documents, U.S. Government Printing Office, Washington, DC 20402 is the exclusive distributor of the official edition. Periodicals postage is paid at Washington, DC.

The **FEDERAL REGISTER** provides a uniform system for making available to the public regulations and legal notices issued by Federal agencies. These include Presidential proclamations and Executive Orders, Federal agency documents having general applicability and legal effect, documents required to be published by act of Congress, and other Federal agency documents of public interest.

Documents are on file for public inspection in the Office of the Federal Register the day before they are published, unless the issuing agency requests earlier filing. For a list of documents currently on file for public inspection, see *www.ofr.gov.*

The seal of the National Archives and Records Administration authenticates the Federal Register as the official serial publication established under the Federal Register Act. Under 44 U.S.C. 1507, the contents of the **Federal Register** shall be judicially noticed.

The **Federal Register** is published in paper and on 24x microfiche. It is also available online at no charge at *www.fdsys.gov*, a service of the U.S. Government Printing Office.

The online edition of the **Federal Register** is issued under the authority of the Administrative Committee of the Federal Register as the official legal equivalent of the paper and microfiche editions (44 U.S.C. 4101 and 1 CFR 5.10). It is updated by 6:00 a.m. each day the **Federal Register** is published and includes both text and graphics from Volume 59, 1 (January 2, 1994) forward. For more information, contact the GPO Customer Contact Center, U.S. Government Printing Office. Phone 202-512-1800 or 866-512-1800 (toll free). E-mail, *gpo@custhelp.com.*

The annual subscription price for the **Federal Register** paper edition is $749 plus postage, or $808, plus postage, for a combined **Federal Register, Federal Register** Index and List of CFR Sections Affected (LSA) subscription; the microfiche edition of the **Federal Register** including the **Federal Register** Index and LSA is $165, plus postage. Six month subscriptions are available for one-half the annual rate. The prevailing postal rates will be applied to orders according to the delivery method requested. The price of a single copy of the daily **Federal Register,** including postage, is based on the number of pages: $11 for an issue containing less than 200 pages; $22 for an issue containing 200 to 400 pages; and $33 for an issue containing more than 400 pages. Single issues of the microfiche edition may be purchased for $3 per copy, including postage. Remit check or money order, made payable to the Superintendent of Documents, or charge to your GPO Deposit Account, VISA, MasterCard, American Express, or Discover. Mail to: U.S. Government Printing Office—New Orders, P.O. Box 979050, St. Louis, MO 63197-9000; or call toll free 1-866-512-1800, DC area 202-512-1800; or go to the U.S. Government Online Bookstore site, see *bookstore.gpo.gov.*

There are no restrictions on the republication of material appearing in the **Federal Register.**

How To Cite This Publication: Use the volume number and the page number. Example: 76 FR 12345.

Postmaster: Send address changes to the Superintendent of Documents, Federal Register, U.S. Government Printing Office, Washington, DC 20402, along with the entire mailing label from the last issue received.

SUBSCRIPTIONS AND COPIES

PUBLIC

Subscriptions:

Paper or fiche	**202–512–1800**
Assistance with public subscriptions	**202–512–1806**

General online information **202–512–1530; 1–888–293–6498**

Single copies/back copies:

Paper or fiche	**202–512–1800**
Assistance with public single copies	**1–866–512–1800 (Toll-Free)**

FEDERAL AGENCIES

Subscriptions:

Paper or fiche	**202–741–6005**
Assistance with Federal agency subscriptions	**202–741–6005**

Printed on recycled paper.

Contents

Federal Register

Vol. 76, No. 232

Friday, December 2, 2011

Agricultural Research Service
NOTICES
Intent To Grant Exclusive License, 75520–75521

Agriculture Department
See Agricultural Research Service
See Economic Research Service
See Farm Service Agency
NOTICES
Agency Information Collection Activities; Proposals, Submissions, and Approvals, 75518–75520

Army Department
See Engineers Corps

Arts and Humanities, National Foundation
See National Foundation on the Arts and the Humanities

Blind or Severely Disabled, Committee for Purchase From People Who Are
See Committee for Purchase From People Who Are Blind or Severely Disabled

Civil Rights Commission
NOTICES
Meetings:
Wyoming Advisory Committee, 75522

Coast Guard
RULES
Safety Zones:
Container Crane Relocation, Cooper and Wando Rivers, Charleston, SC, 75450–75452
PROPOSED RULES
Drawbridge Operations:
Gulf Intracoastal Waterway (Algiers Alternate Route), Belle Chasse, LA, 75505–75508

Commerce Department
See National Oceanic and Atmospheric Administration
NOTICES
Agency Information Collection Activities; Proposals, Submissions, and Approvals, 75522–75523

Committee for Purchase From People Who Are Blind or Severely Disabled
NOTICES
Procurement List; Proposed Additions and Deletions, 75536–75537

Consumer Product Safety Commission
PROPOSED RULES
Table Saw Blade Contact Injuries, 75504–75505
NOTICES
Meetings:
Chronic Hazard Advisory Panel on Phthalates and Phthalate Substitutes; Teleconference, 75537–75538
Meetings; Sunshine Act, 75538

Defense Acquisition Regulations System
PROPOSED RULES
Defense Federal Acquisition Regulation Supplements:
Proposal Adequacy Checklist, 75512–75517

Defense Department
See Defense Acquisition Regulations System
See Engineers Corps
NOTICES
Meetings:
Wage Committee, 75538–75539

Department of Transportation
See Pipeline and Hazardous Materials Safety Administration

Economic Research Service
NOTICES
Agency Information Collection Activities; Proposals, Submissions, and Approvals, 75521–75522

Education Department
RULES
Family Educational Rights and Privacy, 75604–75660

Employment and Training Administration
NOTICES
Change in Status of Extended Benefit Period; Pennsylvania, 75562
Change in Status of Payable Periods:
Emergency Unemployment Compensation 2008 Program for Colorado, 75562–75563
Delay of Payment of Title XII Interest for Three States, 75563
Determinations on Reconsideration of Eligibility To Apply for Worker Adjustment Assistance, 75563–75564
Determinations Regarding Eligibility To Apply for Worker Adjustment Assistance, 75564
Requests for Certifications of Compliance:
Rural Industrialization Loan and Grant Program, 75564–75565

Energy Department
See Federal Energy Regulatory Commission

Engineers Corps
RULES
Restricted Areas and Danger Zones at Eglin Air Force Base, FL, 75453–75458
PROPOSED RULES
U.S. Navy Restricted Areas:
SUPSHIP Bath Maine Detachment Mobile at AUSTAL, USA, Mobile, AL, 75508–75509
NOTICES
Environmental Impact Statements; Availability, etc.:
Central Everglades Planning Project, Okeechobee, Glades, Martin, Palm Beach, Broward, Miami-Dade and Monroe Counties, FL, 75539

Environmental Protection Agency
RULES
Approval and Promulgation of Air Quality Implementation Plans:
Louisiana; Revisions to Control Volatile Organic Compound Emissions for Surface Coatings and Graphic Arts, 75467–75470

West Virginia and Ohio; Determinations of Attainment of the 1997 Annual Fine Particle Standard for the Parkersburg-Marietta and Wheeling Nonattainment Areas, 75464–75467
NOTICES
Environmental Impact Statements; Availability, etc.:
Weekly Receipt, 75543–75544
Proposed Consent Decrees:
Clean Air Act Citizen Suit, 75544–75547

Farm Service Agency
RULES
Farm Loan Programs Loan Making Activities, 75427–75435

Federal Aviation Administration
RULES
Airworthiness Directives:
Quest Aircraft Design, LLC Airplanes, 75442–75445
Amendment of Class E Airspace:
Centerville, IA, 75447
Emmonak, AK, 75447–75448
Mercury, NV, 75446
Olathe, KS, 75445–75446
Certification of Part 23 Turbofan- and Turbojet-Powered Airplanes and Miscellaneous Amendments, 75736–75769
Establishment of Class D and E Airspace:
Frederick, MD, 75448–75449
Establishment of Class E Airspace:
Stuart, IA, 75449–75450
Fatigue Tolerance Evaluation of Metallic Structures, 75435–75442

Federal Communications Commission
NOTICES
Meetings:
North American Numbering Council, 75547

Federal Energy Regulatory Commission
NOTICES
Combined Filings, 75539–75541
Complaints:
Rail Splitter Wind Farm, LLC v. Ameren Services Co., et al., 75542
Filings:
Frank S. Hermance, 75542
Preliminary Permit Applications:
Castle Creek Hydroelectric Project, 75543
Porcupine Dam Hydropower Project, 75542–75543
Transfers of Exemptions:
Missisquoi River Technologies; Missisquoi River Hydro LLC, 75543

Federal Motor Carrier Safety Administration
RULES
Commercial Motor Vehicle Drivers:
Restricting the Use of Cellular Phones, 75470–75488

Federal Reserve System
NOTICES
Agency Information Collection Activities; Proposals, Submissions, and Approvals, 75547–75548
Changes in Bank Control:
Acquisitions of Shares of a Bank or Bank Holding Company, 75548
Formations of, Acquisitions by, and Mergers of Bank Holding Companies, 75548–75549
Proposals to Engage in or To Acquire Companies Engaged in Permissible Nonbanking Activities, 75549

Federal Trade Commission
NOTICES
Agency Information Collection Activities; Proposals, Submissions, and Approvals, 75549–75551

Food and Drug Administration
NOTICES
Draft Guidance for Industry; Availability:
Regulatory Classification of Pharmaceutical Co-Crystals, 75551–75552

Health and Human Services Department
See Food and Drug Administration
See National Institutes of Health

Homeland Security Department
See Coast Guard
See U.S. Customs and Border Protection

Housing and Urban Development Department
NOTICES
Federal Properties Suitable as Facilities To Assist Homeless, 75554

Interior Department
See Land Management Bureau
See National Park Service
See Reclamation Bureau

Labor Department
See Employment and Training Administration
NOTICES
Agency Information Collection Activities; Proposals, Submissions, and Approvals:
Unemployment Insurance Trust Fund Activities Reports, 75561–75562

Land Management Bureau
NOTICES
Environmental Impact Statements; Availability, etc.:
Mount Hope Project, Eureka County, NV, 75554–75555
Taos Field Office, NM, 75556–75557

National Aeronautics and Space Administration
NOTICES
Meetings:
Aeronautics Committee Unmanned Aircraft Systems Subcommittee, 75565

National Foundation on the Arts and the Humanities
NOTICES
Renewal of Advisory Committee, Arts and Artifacts Indemnity Panel, 75565

National Highway Traffic Safety Administration
NOTICES
Grants of Petitions:
General Motors LLC, 75599–75600

National Institutes of Health
NOTICES
Meetings:
Center for Scientific Review, 75552
National Institute of Allergy and Infectious Diseases, 75552–75553
National Institute of Diabetes and Digestive and Kidney Diseases, 75553

National Labor Relations Board
NOTICES
Meetings; Sunshine Act, 75566

National Oceanic and Atmospheric Administration
RULES
Atlantic Highly Migratory Species:
Vessel Monitoring Systems, 75492–75503
Fisheries of the Caribbean, Gulf of Mexico, and South Atlantic:
Spiny Lobster Fishery of the Gulf of Mexico and South Atlantic; Amendment 10, 75488–75492
NOTICES
Atlantic Highly Migratory Species Fisheries:
Vessel Monitoring Systems; Approved Mobile Transmitting Units and Communications Service Providers, 75523–75524
Permit Amendment Applilcations:
Marine Mammals; File No. 14241, 75524–75525
Takes of Marine Mammals Incidental to Specified Activities:
Marine Geophysical Survey in the Central Pacific Ocean, November 2011 through January 2012, 75525–75536

National Park Service
NOTICES
Environmental Impact Statements; Availability, etc.:
General Management Plan/Wilderness Study, Hawaii Volcanoes National Park, Hawaii, 75557–75558
Restoration of the Mariposa Grove of Giant Sequoias, Yosemite National Park, Ca., 75558–75559
Meetings:
National Capital Memorial Advisory Commission, 75559
National Register of Historic Places:
Pending Nominations and Related Actions, 75560

Nuclear Regulatory Commission
NOTICES
Appointments to Performance Review Boards for Senior Executive Service, 75566
Combined License Applications, 75566–75567

Personnel Management Office
NOTICES
Meetings:
Federal Prevailing Rate Advisory Committee, 75567
Hispanic Council on Federal Employment, 75567–75568

Pipeline and Hazardous Materials Safety Administration
RULES
Commercial Motor Vehicle Drivers:
Restricting the Use of Cellular Phones, 75470–75488

Postal Regulatory Commission
NOTICES
Post Office Closings, 75568–75570

Postal Service
RULES
Express Mail Domestic Postage Refund Policy and Waiver of Signature, 75461–75464
NOTICES
Change in Rates and Classes of General Applicability for Competitive Products, 75662–75734

Reclamation Bureau
NOTICES
Agency Information Collection Activities; Proposals, Submissions, and Approvals, 75560–75561

Securities and Exchange Commission
NOTICES
Self-Regulatory Organizations; Proposed Rule Changes:
C2 Options Exchange, Inc., 75582–75584
Chicago Board Options Exchange, Inc., 75575–75586
Depository Trust Co., 75570–75572
NASDAQ OMX BX, Inc., 75573
NASDAQ OMX PHLX LLC, 75572–75573
NASDAQ Stock Market, LLC, 75586, 75593–75597
National Stock Exchange, Inc., 75586–75593
New York Stock Exchange LLC, 75573–75575

Small Business Administration
NOTICES
Disaster Declarations:
Nebraska; Amendment 2, 75598
North Carolina, 75597–75598

State Department
NOTICES
Agency Information Collection Activities; Proposals, Submissions, and Approvals:
DS–71, Affidavit of Identifying Witness, 75599
Statement of Non-Receipt of a Passport, 75598–75599
Meetings:
Advisory Committee on International Economic Policy; Cancellation, 75599

Surface Transportation Board
NOTICES
Acquisition and Operation Exemptions:
Port Rail Link, Inc. for Rail Lines of Union Pacific Railroad Co., et al., 75600–75601
Intra-Corporate Family Merger Exemptions:
Lake State Railway Co.; Saginaw Bay Southern Railway Co., 75601
Lease and Operation Exemptions:
Hilton and Albany Railroad, Inc. from Norfolk Southern Railway Co., 75602

Transportation Department
See Federal Aviation Administration
See Federal Motor Carrier Safety Administration
See National Highway Traffic Safety Administration
See Pipeline and Hazardous Materials Safety Administration
See Surface Transportation Board

U.S. Customs and Border Protection
NOTICES
Completion of Broker Self-Assessment Outreach Pilot, 75553–75554

Veterans Affairs Department
RULES
Servicemembers' Group Life Insurance Traumatic Injury Protection Program:
Genitourinary Losses, 75458–75461
PROPOSED RULES
Autopsies at VA Expense, 75509–75512

Separate Parts In This Issue

Part II
Education Department, 75604–75660

Part III
Postal Service, 75662–75734

Part IV
Transportation Department, Federal Aviation Administration, 75736–75769

Reader Aids
Consult the Reader Aids section at the end of this page for phone numbers, online resources, finding aids, reminders, and notice of recently enacted public laws.

To subscribe to the Federal Register Table of Contents LISTSERV electronic mailing list, go to http://listserv.access.gpo.gov and select Online mailing list archives, FEDREGTOC-L, Join or leave the list (or change settings); then follow the instructions.

CFR PARTS AFFECTED IN THIS ISSUE

A cumulative list of the parts affected this month can be found in the Reader Aids section at the end of this issue.

7 CFR
761 75427
763 75427
764 75427

14 CFR
23 75736
29 75435
39 75442
71 (6 documents) 75445, 75446, 75447, 75448, 75449

16 CFR
Proposed Rules:
Ch. II 75504

33 CFR
165 75450
334 75453
Proposed Rules:
117 75505
334 75508

34 CFR
99 75604

38 CFR
9 75458
Proposed Rules:
17 75509

39 CFR
111 75461

40 CFR
52 (2 documents) 75464, 75467

48 CFR
Proposed Rules:
215 75512
252 75512

49 CFR
177 75470
383 75470
384 75470
390 75470
391 75470
392 75470

50 CFR
622 75488
635 75492
640 75488

Rules and Regulations

Federal Register
Vol. 76, No. 232
Friday, December 2, 2011

This section of the FEDERAL REGISTER contains regulatory documents having general applicability and legal effect, most of which are keyed to and codified in the Code of Federal Regulations, which is published under 50 titles pursuant to 44 U.S.C. 1510.

The Code of Federal Regulations is sold by the Superintendent of Documents. Prices of new books are listed in the first FEDERAL REGISTER issue of each week.

DEPARTMENT OF AGRICULTURE

Farm Service Agency

7 CFR Parts 761, 763, and 764

RIN 0560–AI03

Farm Loan Programs Loan Making Activities

AGENCY: Farm Service Agency, USDA.

ACTION: Final rule.

SUMMARY: The Farm Service Agency (FSA) is amending the Farm Loan Programs (FLP) loan making regulations to implement a new program and to amend existing regulations for direct and guaranteed loans as required by the Food, Conservation, and Energy Act of 2008 (the 2008 Farm Bill). This rule establishes the loan making and servicing regulations for the new Land Contract (LC) Guarantee Program. The amendments change the farm experience requirements in the regulations for direct Farm Operating Loans (OL) and direct Farm Ownership Loans (FO), and make certain equine farmers and certain equine losses eligible for Emergency Loans (EM).

DATES: The rule is effective January 3, 2012.

FOR FURTHER INFORMATION CONTACT: Connie Holman; *telephone:* (202) 690–0155. Persons with disabilities or who require alternative means for communication (Braille, large print, audio tape, *etc.*) should contact the USDA Target Center at (202) 720–2600 (voice and TDD).

SUPPLEMENTARY INFORMATION:

Background

This final rule implements four provisions of the 2008 Farm Bill (Pub. L. 110–246) concerning loan making activities for FSA's direct and guaranteed loan programs. On September 23, 2010, FSA published the Farm Loan Programs Loan Making Activities proposed rule in the **Federal Register** (75 FR 57866–57880). This final rule addresses the comments received on the proposed rule. FSA received two written comments on the proposed rule. As discussed below, one comment addressed information contained in the Summary of Economic Impacts section of the proposed rule and the Cost Benefit Analysis accompanying the proposed rule. The other comment was a general statement regarding farm subsidies that is outside the scope of this rule and therefore this rule does not address it. The commenters were members of the general public.

The amendments in this rule were discussed as part of USDA's Joint Regional Consultation Strategy facilitated from November 2010 through January 2011. During these Joint Consultation Sessions, Tribal leaders from all Federally recognized Native American Tribes and individual Tribal members were given the opportunity to comment on forthcoming USDA rules. Comments received during these sessions are also addressed in this rule. The comments received during Tribal consultation involved eligibility of equine farmers and ranchers for EM loans.

This rule also makes clarifying changes to some of the provisions in the proposed rule. These changes are not in response to public comment, but are clarifications necessary to implement the program. These changes are largely technical in nature, such as correcting internal CFR references, and correcting inconsistent terminology.

Land Contract Guarantee Program

This final rule implements the Land Contract Guarantee Program authorized in the 2008 Farm Bill (7 U.S.C. 1936). FSA believes that the Land Contract Guarantee Program will provide a valuable alternative for intergenerational transfers of farm real estate to help ensure the future viability of family farms. Eligibility for the Land Contract Guarantee Program will be limited to beginning farmers and socially disadvantaged farmers. In brief, a beginning farmer is defined in FLP regulations as someone who has not operated a farm for more than 10 years, does not own real farm property where aggregate acreage exceeds 30 percent of the median farm acreage of the farms in the county where the property is located, and will substantially participate in the operation of the farm. Socially disadvantaged applicants are members of a group whose members have been subject to racial, ethnic, or gender prejudice. See definitions of beginning farmer and socially disadvantaged group in 7 CFR 761.2. Eligibility for the Land Contract Guarantee Program will be limited to family farms, which are farms in which the majority of the labor and management decisions are provided by the farm family, and guarantees may only be used for financing the purchase of a farm on a new land contract. See FSA definitions for family farm, family member, and farm in 7 CFR 761.2.

This rule implements regulations for the Land Contract Guarantee Program in 7 CFR part 763. The Land Contract Guarantee Program will be consistent with other FSA Farm Loan Program regulations with regards to general applicant eligibility criteria and most loan servicing options. Eligibility criteria have also been established for the seller in this rule. The program requires the services of either a servicing agent or an escrow agent. The program provides benefits to the seller to encourage intergenerational transfers of farm property. The Land Contract Guarantee Program gives the seller the option of choosing either a:

(1) Prompt payment guarantee of three years' amortized annual installments plus the amount of three years' real estate taxes and hazard insurance premiums, or

(2) Standard 90 percent guarantee of outstanding principal on the Land Contract.

The provisions in this rule for the Land Contract Guarantee Program are slightly different from those in the proposed rule. These minor technical changes are made to improve clarity of the regulations. There were no public or Tribal consultation comments specifically on the Land Contract Guarantee program, and no substantive changes are made from the provisions in the proposed rule. The clarifying and technical changes are included in the final rule are as described below.

- When stating the purpose of the Land Contract Program in § 763.1 in the proposed rule some of the wording was redundant and some of the terminology

was inconsistent with § 761.2. The additional wording has been removed and the terminology has been corrected.

- An incorrect CFR reference was given in the seller eligibility requirements in § 763.5(a)(4) in the proposed rule with regards to compliance with federal requirements on debarment and suspension. The reference has been corrected.
- An incorrect reference was given in the buyer application requirements in § 763.5(b)(14) in the proposed rule with regards to debarment and suspension. The reference has been corrected.
- Inconsistent terminology was used in the buyer application requirements in § 763.7(b) in the proposed rule. The terminology has been changed to be consistent.
- An incorrect reference was given in the buyer application requirements in § 763.7(b)(3)(v) in the proposed rule. The reference has been corrected.
- Inconsistent terminology in § 763.10(a) in the proposed rule has been changed to be consistent.
- Redundant wording in § 763.11(a) in the proposed rule has been removed.
- Incorrect references and inconsistent terminology in § 763.19(b)(4) in the proposed rule have been corrected.
- The reference in ''Appraisal method'' under ''Standard guarantee plan'' as specified in ''Delinquent servicing and collection'' in § 763.20(b)(2)(ii)(B) was inadvertently omitted in the proposed rule. The reference has been added.
- The reference to the type of interest rate in ''Establishment of Federal debt and Agency recovery of loss claim paid'' in § 763.21(a)(1) in the proposed rule was specified incorrectly. It has been corrected.

Eligibility Change for Direct Farm Ownership and Farm Operating Loans

This rule amends the experience requirements for direct loan eligibility to consider all prior farming experience of the applicant. This amendment is required by sections 5001 and 5101 of the 2008 Farm Bill, which amended sections 302 and 311 of the Consolidated Farm and Rural Development Act (CONACT, 7 U.S.C. 1922 and 1941). As specified in this rule, FSA requires that the broadened farm experience requirement be supplemented by on-the-job training or education that occurred within the last 5 years prior to the date of the application, if all prior farming occurred more than five years prior to application. FSA has considerable experience with providing supervised credit to farmers, and these broader eligibility requirements should ensure that applicants can be provided an enhanced opportunity to thrive in today's agribusiness industry.

We did not receive any public comments about the eligibility requirements in the proposed rule. The provisions for eligibility in this final rule are the same as in the proposed rule.

We did receive comments about the economic impact of the eligibility requirements, in public comments on the Cost Benefit Analysis (CBA). Essentially, the commenter stated that FSA had significantly underestimated the pool of applicants that would be made eligible for loans by these changes in requirements, because of the large pool of potential applicants who have recently graduated from agricultural colleges, or who have other relevant non-farm experience. FSA feels that our original estimates of impact are correct, as borrowers must also meet all other eligibility requirements, which have not changed. The same commenter also questioned the accuracy of the loan subsidy rate used in our analysis; we used the rate required by The Office of Management and Budget (OMB). No changes have been made based on these comments.

Emergency Loans

FSA provides emergency loans to help farmers recover from production and physical losses due to drought, flooding, other natural disasters, and certain quarantines. As required by section 5201 of the 2008 Farm Bill, which amended section 321 of the CONACT (7 U.S.C. 1961), this rule expands EM eligibility to equine farmers whose primary enterprise is to breed, raise, and sell horses. For these farmers, losses will be treated the same as losses for other types of livestock operations, with minor differences in security requirements intended to accommodate the unique nature of the equine industry.

We received two comments during the Tribal consultation on the EM provisions in the proposed rule. The comments are presented briefly below, followed by FSA responses.

Comment: FSA should loosen up the policy so that all equine operations are eligible for loans.

Response: FSA does not believe every individual involved in any aspect of the equine industry should be considered farmers and, therefore, should be eligible for FSA loans. As required by section 5201 of the 2008 Farm Bill, FSA has revised the EM loan regulations to add eligibility for individuals and entities involved as equine farmers. FSA's definition of equine farmer only includes those in the business of breeding, raising and selling horses because Conference Report language (No. 110–627) on section 5201 clearly indicates Congress' intent to exempt losses associated with horses used for racing, showing, recreation, or pleasure and associated losses of income from eligibility under the EM program. The new equine EM provisions will allow FSA to provide loan assistance to equine farmers to help minimize the effects of natural disasters on their operations. No change was made to the rule in response to this comment.

Comment: FSA should also make rodeo stock eligible for EM loan assistance.

Response: As written, this rule includes individuals and entities involved in the business of breeding, raising, and selling rodeo stock as eligible for EM loans. No change to the rule was made in response to this comment.

Executive Order 12866 and 13563

Executive Order 12866, ''Regulatory Planning and Review,'' and Executive Order 13563, ''Improving Regulation and Regulatory Review,'' direct agencies to assess all costs and benefits of available regulatory alternatives and, if regulation is necessary, to select regulatory approaches that maximize net benefits (including potential economic, environmental, public health and safety effects, distributive impacts, and equity). Executive Order 13563 emphasized the importance of quantifying both costs and benefits, of reducing costs, of harmonizing rules, and of promoting flexibility.

OMB designated this rule as not significant under Executive Order 12866 and, therefore, OMB has not reviewed this rule.

Regulatory Flexibility Act

The Regulatory Flexibility Act (5 U.S.C. 601–612), as amended by the Small Business Regulatory Enforcement Fairness Act of 1996 (SBREFA), generally requires an agency to prepare a regulatory flexibility analysis of any rule subject to the notice and comment rulemaking requirements under the Administrative Procedure Act (5 U.S.C. 553) or any other statute, unless the agency certifies that the rule will not have a significant economic impact on a substantial number of small entities. FSA has determined that this rule will not have a significant impact on a substantial number of small entities for the reasons explained below. Thus, FSA has not prepared a regulatory flexibility analysis.

All FSA direct loan borrowers and all farm entities affected by this rule are small businesses according to U.S. Small Business Administration small business size standards. There is no diversity in size of the entities affected by this rule, and the costs to comply with it are the same for all sizes of entities. The costs of compliance with this rule are expected to be minimal. No comments were received on the proposed rule regarding disparate impact on small entities. Therefore, FSA certifies that the rule will not have a significant economic impact on a substantial number of small entities.

Environmental Evaluation

The environmental aspects of this final rule have been considered in a manner consistent with the provisions of the National Environmental Policy Act of 1969 (NEPA, 42 U.S.C. 4321–4347), the regulations of the Council on Environmental Quality (40 CFR parts 1500–1508), and the FSA regulations for compliance with NEPA (7 CFR parts 799 and 1940, subpart G). The changes are non-discretionary, and, as such, no new significant circumstances or information relevant to environmental concerns have been established. In consideration of the previous analysis documented in the 2003 Programmatic Environmental Assessment (PEA) and the reasons outlined in the 2004 Finding of No Significant Impact (FONSI), FSA has concluded that this final rule will not have a significant impact on the quality of the human environment either individually or cumulatively, and, therefore, is categorically excluded and not subject to an environmental assessment or environmental impact statement in accordance with 7 CFR 1940.310(e)(3). The Final PEA and a copy of the FONSI are available at: *http://www.fsa.usda.gov/FSA/webapp?area=home&subject=ecrc&topic=enl-ea.*

Executive Order 12372

Executive Order 12372, ''Intergovernmental Review of Federal Programs,'' requires consultation with State and local officials. The objectives of the Executive Order are to foster an intergovernmental partnership and a strengthened Federalism, by relying on State and local processes for State and local government coordination and review of proposed Federal Financial assistance and direct Federal development. For reasons set forth in the Notice to 7 CFR part 3015, subpart V published in the **Federal Register** on June 24, 1983 (48 FR 29115), the programs and activities within this rule are excluded from the scope of Executive Order 12372.

Executive Order 12988

This rule has been reviewed in accordance with Executive Order 12988, ''Civil Justice Reform.'' The provisions of this rule will have preemptive effect with respect to any State and local laws, regulations, or policies that conflict with such provision or which otherwise impede their full implementation. This rule will not have retroactive effect. Before any judicial action may be brought regarding the provisions of this rule, all administrative remedies in accordance with 7 CFR part 11 must be exhausted.

Executive Order 13132

This rule has been reviewed under Executive Order 13132, ''Federalism''. The policies contained in this rule do not have any substantial direct effect on states, the relationship between the national government and the states, or the distribution of power and responsibilities among the various levels of government. Nor does this rule impose substantial direct compliance costs on state and local governments. Therefore, consultation with the states is not required.

Executive Order 13175

This rule has been reviewed for compliance with Executive Order 13175, ''Consultation and Coordination with Indian Tribal Governments''. This Executive Order imposes requirements on the development of regulatory policies that have Tribal implications or preempt Tribal laws. The Office of Tribal Relations has concluded that the policies contained in this rule do not have Tribal implications that preempt Tribal law. This rule was included in the Joint Regional Consultation Strategy facilitated by USDA from November 2010 through January 2011. This strategy consolidated consultation efforts of 70 rules from the 2008 Farm Bill. USDA sent senior level agency staff to seven regional locations and consulted with Tribal leadership in each region on the rules. The issues raised in Tribal consultation and the resulting changes are discussed above.

Unfunded Mandates

Title II of the Unfunded Mandates Reform Act of 1995 (URMA) (Pub. L. 104–4) requires Federal agencies to assess the effects of their regulatory actions on State, local, or Tribal governments or the private sector. Agencies generally must prepare a written statement, including a cost benefit analysis, for final rules with Federal mandates that may result in expenditures of $100 million or more in any 1 year for State, local, or Tribal governments, in the aggregate, or to the private sector. UMRA generally requires agencies to consider alternatives and adopt the more cost effective or least burdensome alternative that achieves the objective of the rule. This rule contains no Federal mandates as defined by Title II of UMRA for State, local, or Tribal governments or for the private sector. Therefore, this rule is not subject to the requirements of sections 202 and 205 of UMRA.

Federal Assistance Programs

The title and number of the Federal assistance programs in Catalog of Federal Domestic Assistance to which this rule applies are:

10.099—Conservation Loans.

10.404—Emergency Loans.

10.406—Farm Operating Loans.

10.407—Farm Ownership Loans.

Paperwork Reduction Act

In accordance with the Paperwork Reduction Act of 1995 (44 U.S.C. 3501–3520), FSA has described the new information collection activities in the request for public comment in the proposed rule. No comments about the information collection were received from the public. The information collection reporting and recordkeeping requirements associated with this rulemaking have been approved by OMB. OMB control numbers for this rule are 0560–0233, 0560–0236, 0560–0237, 0560–0238, and 0560–0279.

E-Government Act Compliance

FSA is committed to complying with the E-Government Act, to promote the use of the Internet and other information technologies to provide increased opportunities for citizen access to Government information and services, and for other purposes.

List of Subjects

7 CFR Part 761

Accounting, Loan programs—agriculture, Rural areas.

7 CFR Part 763

Agriculture, Banks, Banking, Credit, Loan programs—agriculture.

7 CFR Part 764

Agriculture, Disaster assistance, Loan programs—agriculture.

For the reasons discussed in the preamble, 7 CFR chapter VII is amended as follows:

PART 761—FARM LOAN PROGRAMS; GENERAL PROGRAM ADMINISTRATION

■ 1. The authority citation for part 761 continues to read as follows:

Authority: 5 U.S.C. 301 and 7 U.S.C. 1989.

■ 2. Revise the part heading for 7 CFR part 761 to read as shown above.

■ 3. Amend § 761.2 paragraph (b) by adding a definition, in alphabetical order, for ''Land Contract'' to read as follows:

§ 761.2 Abbreviations and definitions.

* * * * *

(b) * * *

Land contract is an installment contract executed between a buyer and a seller for the sale of real property, in which complete fee title ownership of the property is not transferred until all payments under the contract have been made.

* * * * *

■ 4. Add part 763 to read as follows:

PART 763—LAND CONTRACT GUARANTEE PROGRAM

Sec.

763.1 Introduction.
763.2 Abbreviations and definitions.
763.3 Full faith and credit.
763.4 Authorized land contract purpose.
763.5 Eligibility.
763.6 Limitations.
763.7 Application requirements.
763.8 Incomplete applications.
763.9 Processing complete applications.
763.10 Feasibility.
763.11 Maximum loss amount, guarantee period, and conditions.
763.12 Down payment, rates, terms and installments.
763.13 Fees.
763.14 Appraisals.
763.15 Taxes and insurance.
763.16 Environmental regulation compliance.
763.17 Approving application and executing guarantee.
763.18 General servicing responsibilities.
763.19 Contract modification.
763.20 Delinquent servicing and collecting on guarantee.
763.21 Establishment of Federal debt and Agency recovery of loss claim payments.
763.22 Negligence and negligent servicing.
763.23 Terminating the guarantee.

Authority: 5 U.S.C. 501 and 7 U.S.C. 1989.

§ 763.1 Introduction.

(a) *Purpose.* The Land Contract Guaranteed Program provides certain financial guarantees to the seller of a farm through a land contract sale to a beginning farmer or a socially disadvantaged farmer.

(b) *Types of guarantee.* The seller may request either of the following:

(1) *The prompt payment guarantee plan.* The Agency will guarantee an amount not to exceed three amortized annual installments plus an amount equal to the total cost of any related real estate taxes and insurance incurred during the period covered by the annual installment; or

(2) *The standard guarantee plan.* The Agency will guarantee an amount equal to 90 percent of the outstanding principal under the land contract.

(c) *Guarantee period.* The guarantee period is 10 years for either plan regardless of the term of the land contract.

§ 763.2 Abbreviations and definitions.

Abbreviations and definitions for terms used in this part are in § 761.2 of this chapter.

§ 763.3 Full faith and credit.

(a) The land contract guarantee constitutes an obligation supported by the full faith and credit of the United States. The Agency may contest the guarantee only in cases of fraud or misrepresentation by the seller, in which:

(1) The seller had actual knowledge of the fraud or misrepresentation at the time it because the seller, or

(2) The seller participated in or condoned the fraud or misrepresentation.

(b) Loss claims also may be reduced or denied to the extent that any negligence contributed to the loss under § 763.22.

§ 763.4 Authorized land contract purpose.

The Agency will only guarantee the Contract installments, real estate taxes and insurance; or outstanding principal balance for an eligible seller of a family farm, through a land contract sale to an eligible beginning or socially disadvantaged farmer.

§ 763.5 Eligibility.

(a) *Seller eligibility requirements.* The private seller, and each entity member in the case of an entity seller, must:

(1) Possess the legal capacity to enter into a legally binding agreement;

(2) Not have provided false or misleading documents or statements during past or present dealings with the Agency;

(3) Not be ineligible due to disqualification resulting from Federal Crop Insurance violation, according to 7 CFR part 718; and

(4) Not be suspended or debarred under 2 CFR parts 180 and 417.

(b) *Buyer eligibility requirements.* The buyer must meet the following requirements to be eligible for the Land Contract Guarantee Program:

(1) Is a beginning farmer or socially disadvantaged farmer engaged primarily in farming in the United States after the guarantee is issued.

(2) Is the owner and operator of a family farm after the Contract is completed. In the case of an entity buyer:

(i) Each entity member's ownership interest may not exceed the amount specified in the family farm definition in § 761.2 of this chapter.

(ii) The entity members cannot themselves be entities.

(iii) The entity must be authorized to own and operate a farm in the State in which the farm is located.

(iv) If the entity members holding a majority interest are related by blood or marriage, at least one member of the entity must:

(A) Operate the farm and

(B) Own the farm after the contract is completed;

(v) If the entity members holding a majority interest are not related by blood or marriage, the entity members holding a majority interest must:

(A) Operate the farm; and

(B) Own the farm, or the entity itself must own the farm after the contract is completed;

(3) Must have participated in the business operations of a farm or ranch for at least 3 years out of the last 10 years prior to the date the application is submitted.

(4) The buyer, and all entity members in the case of an entity, must not have caused the Agency a loss by receiving debt forgiveness on all or a portion of any direct or guaranteed loan made under the authority of the Act by debt write-down or write-off; compromise, adjustment, reduction, or charge off under the provisions of section 331 of the Act; discharge in bankruptcy; or through payment of a guaranteed loss claim on more than three occasions on or prior to April 4, 1996 or any occasion after April 4, 1996. If the debt forgiveness is resolved by repayment of the Agency's loss, the Agency may still consider the debt forgiveness in determining the applicant's creditworthiness.

(5) The buyer, and all entity members in the case of an entity, must not be delinquent on any Federal debt, other than a debt under the Internal Revenue Code of 1986, when the guarantee is issued.

(6) The buyer, and all entity members in the case of an entity, may have no outstanding unpaid judgment awarded to the United States in any court. Such judgments do not include those filed as a result of action in the United States Tax Courts.

(7) The buyer, and all entity members in the case of an entity, must be a citizen of the United States, United States non-citizen national, or a qualified alien under applicable Federal immigration laws. United States non-citizen nationals and qualified aliens must provide the appropriate documentation as to their immigration status as required by the United States Department of Homeland Security, Bureau of Citizenship and Immigration Services.

(8) The buyer, and all entity members in the case of an entity, must possess the legal capacity to enter into a legally binding agreement.

(9) The buyer, and all entity members in the case of an entity, must not have provided false or misleading documents or statements during past or present dealings with the Agency.

(10) The buyer, and all entity members in the case of an entity, must not be ineligible as a result of a conviction for controlled substances according to 7 CFR part 718.

(11) The buyer, and all entity members in the case of an entity, must have an acceptable credit history demonstrated by satisfactory debt repayment.

(i) A history of failures to repay past debts as they came due when the ability to repay was within their control will demonstrate unacceptable credit history.

(ii) Unacceptable credit history will not include:

(A) Isolated instances of late payments which do not represent a pattern and were clearly beyond their control; or

(B) Lack of credit history.

(12) The buyer is unable to enter into a contract unless the seller obtains an Agency guarantee to finance the purchase of the farm at reasonable rates and terms.

(13) The buyer, and all entity members in the case of an entity, must not be ineligible due to disqualification resulting from Federal Crop Insurance violation, according to 7 CFR part 718.

(14) The buyer, and all entity members in the case of an entity, must not be suspended or debarred under 2 CFR parts 180 and 417.

§ 763.6 Limitations.

(a) To qualify for a guarantee, the purchase price of the farm to be acquired through the land contract sale cannot exceed the lesser of:

(1) $500,000 or

(2) The current market value of the property.

(b) A guarantee will not be issued if the appraised value of the farm is greater than $500,000.

(c) Existing land contracts are not eligible for the Land Contract Guarantee Program.

(d) Guarantees may not be used to establish or support a non-eligible enterprise.

§ 763.7 Application requirements.

(a) *Seller application requirements.* A seller who contacts the Agency with interest in a guarantee under the Land Contract Guarantee Program will be sent the land contract letter of interest outlining specific program details. To formally request a guarantee on the proposed land contract, the seller, and each entity member in the case of an entity, must:

(1) Complete, sign, date, and return the land contract letter of interest to the Agency, and

(2) Provide the name, address, and telephone number of the chosen servicing or escrow agent.

(b) *Buyer application requirements.* A complete application from the buyer will include:

(1) The completed Agency application form;

(2) A current financial statement (not older than 90 days);

(3) If the buyer is an entity:

(i) A complete list of entity members showing the address, citizenship, principal occupation, and the number of shares and percentage of ownership or stock held in the entity by each member, or the percentage of interest in the entity held by each member;

(ii) A current personal financial statement for each member of the entity;

(iii) A current financial statement for the entity itself;

(iv) A copy of the entity's charter or any entity agreement, any articles of incorporation and bylaws, any certificate or evidence of current registration (in good standing), and a resolution adopted by the Board of Directors or entity members authorizing specified officers of the entity to apply for and obtain the land contract guarantee and execute required debt, security, and other instruments and agreements; and

(v) In the form of a married couple applying as a joint operation, items in paragraphs (b)(3)(i) and (b)(3)(iv) of this section will not be required. The Agency may request copies of the marriage license, prenuptial agreement, or similar documents as needed to verify loan eligibility and security. The information specified in paragraphs (b)(3)(ii) and (iii) of this section are only required to the extent needed to show the individual and joint finances of the husband and wife without duplication;

(4) A brief written description of the buyer's proposed operation;

(5) A farm operating plan;

(6) A brief written description of the buyer's farm training and experience;

(7) Three years of income tax and other financial records acceptable to the Agency, unless the buyer has been farming less than 3 years;

(8) Three years of farm production records, unless the buyer has been farming less than 3 years;

(9) Verification of income and off-farm employment if relied upon for debt repayment;

(10) Verification of all debts;

(11) Payment of the credit report fee;

(12) Documentation of compliance with the environmental regulations in part 1940, subpart G, of this title;

(13) A copy of the proposed land contract; and

(14) Any additional information deemed necessary by the Agency to effectively evaluate the applicant's eligibility and farm operating plan.

§ 763.8 Incomplete applications.

(a) Within 10 days of receipt of an incomplete application, the Agency will provide the seller and buyer written notice of any additional information that must be provided. The seller or buyer, as applicable, must provide the additional information within 20 calendar days of the date of the notice.

(b) If the additional information is not received, the Agency will provide written notice that the application will be withdrawn if the information is not received within 10 calendar days of the date of the second notice.

§ 763.9 Processing complete applications.

Applications will be approved or rejected and all parties notified in writing no later than 30 calendar days after application is considered complete.

§ 763.10 Feasibility.

(a) The buyer's proposed operation as described in a form acceptable to the Agency must represent the operating cycle for the farm operation and must project a feasible plan as defined in § 761.2(b) of this chapter.

(b) The projected income, expenses, and production estimates:

(1) Must be based on the buyer's last 3 years actual records of production and financial management unless the buyer has been farming less than 3 years;

(2) For those farming less than 3 years, a combination of any actual history and other reliable sources of information may be used. Sources must be documented and acceptable to the Agency; and

(3) May deviate from historical performance if deviations are the direct

result of specific changes in the operation, reasonable, justified, documented, and acceptable to the Agency.

(c) Price forecasts used in the plan must be reasonable, documented, and acceptable to the Agency.

(d) The Agency will analyze the buyer's business ventures other than the farm operation to determine their soundness and contribution to the operation.

(e) When a feasible plan depends on income from sources other than from owned land, the income must be dependable and likely to continue.

(f) When the buyer's farm operating plan is developed in conjunction with a proposed or existing Agency direct loan, the two farm operating plans must be consistent.

§ 763.11 Maximum loss amount, guarantee period, and conditions.

(a) *Maximum loss amount.* The maximum loss amount due to nonpayment by the buyer covered by the guarantee is based on the type of guarantee initially selected by the seller as follows:

(1) The prompt payment guarantee will cover:

(i) Three amortized annual installments; or

(ii) An amount equal to three annual installments (including an amount equal to the total cost of any tax and insurance incurred during the period covered by the annual installments).

(2) The standard guarantee will cover an amount equal to 90 percent of the outstanding principal balance.

(b) *Guarantee period.* The period of the guarantee will be 10 years from the effective date of the guarantee unless terminated earlier under § 763.23.

(c) *Conditions.* The seller will select an escrow agent to service a Land Contract Agreement if selecting the prompt payment guarantee plan, and a servicing agent to service a Land Contract Agreement if selecting the standard guarantee plan.

(1) An escrow agent must provide the Agency evidence of being a bonded title insurance company, attorney, financial institution or fiscally responsible institution.

(2) A servicing agent must provide the Agency evidence of being a bonded commercial lending institution or similar entity, registered and authorized to provide escrow and collection services in the State in which the real estate is located.

§ 763.12 Down payment, rates, terms, and installments.

(a) *Down payment.* The buyer must provide a minimum down payment of five percent of the purchase price of the farm.

(b) *Interest rate.* The interest rate charged by the seller must be fixed at a rate not to exceed the Agency's direct FO loan interest rate in effect at the time the guarantee is issued, plus three percentage points. The seller and buyer may renegotiate the interest rate for the remaining term of the contract following expiration of the guarantee.

(c) *Land contract terms.* The contract payments must be amortized for a minimum of 20 years and payments on the contract must be of equal amounts during the term of the guarantee.

(d) *Balloon installments.* Balloon payments are prohibited during the 10-year term of the guarantee.

§ 763.13 Fees.

(a) *Payment of fees.* The seller and buyer will be responsible for payment of any expenses or fees necessary to process the Land Contract Agreement required by the State or County to ensure that proper title is vested in the seller including, but not limited to, attorney fees, recording costs, and notary fees.

(b) [Reserved]

§ 763.14 Appraisals.

(a) *Standard guarantee plan.* For the standard guarantee plan, the value of real estate to be purchased will be established by an appraisal obtained at Agency expense and completed as specified in § 761.7 of this chapter. An appraisal is required prior to, or as a condition of, approval of the guarantee.

(b) *Prompt payment guarantee plan.* The Agency may, at its option and expense, obtain an appraisal to determine value of real estate to be purchased under the Prompt Payment Guarantee plan.

§ 763.15 Taxes and insurance.

(a) The seller will ensure that taxes and insurance on the real estate are paid timely and will provide the evidence of payment to the escrow or servicing agent.

(b) The seller will maintain flood insurance, if available, if buildings are located in a special 100-year floodplain as defined by FEMA flood hazard area maps.

(c) The seller will report any insurance claim and use of proceeds to the escrow or servicing agent.

§ 763.16 Environmental regulation compliance.

(a) *Environmental compliance requirements.* The environmental requirements contained in part 799 and part 1940, subpart G, of this title must be met prior to approval of guarantee request.

(b) *Determination.* The Agency determination of whether an environmental problem exists will be based on:

(1) The information supplied with the application;

(2) Environmental resources available to the Agency including, but not limited to, documents, third parties, and government agencies;

(3) Other information supplied by the buyer or seller upon Agency request; and

(4) A visit to the farm.

§ 763.17 Approving application and executing guarantee.

(a) Approval is subject to the availability of funds, meeting the requirements in this part, and the participation of an approved escrow or servicing agent, as applicable.

(b) Upon approval of the guarantee, all parties (buyer, seller, escrow or servicing agent, and Agency official) will execute the Agency's guarantee agreement.

(c) The ''Land Contract Agreement for Prompt Payment Guarantee'' or the ''Land Contract Agreement for Standard Guarantee'' will describe the conditions of the guarantee, outline the covenants and any agreements of the buyer, seller, escrow or servicing agent, and the Agency, and outline the process for payment of loss claims.

§ 763.18 General servicing responsibilities.

(a) For the prompt payment guarantee plan, the seller must use a third party escrow agent approved by the Agency. The escrow agent will:

(1) Provide the Agency a copy of the recorded Land Contract;

(2) Handle transactions relating to the Land Contract between the buyer and seller;

(3) Receive Land Contract installment payments from the buyer and send them to the seller;

(4) Provide evidence to the Agency that property taxes are paid and insurance is kept current on the security property;

(5) Send a notice of payment due to the buyer at least 30 days prior to the installment due date;

(6) Notify the Agency and the seller if the buyer defaults;

(7) Service delinquent accounts as specified in § 763.20(a);

(8) Make demand on the Agency to pay missed payments;

(9) Send the seller any missed payment amount paid by the Agency under the guarantee;

(10) Notify the Agency on March 31 and September 30 of each year of the outstanding balance on the Land Contract and the status of payment; and

(11) Perform other duties as required by State law and as agreed to by the buyer and the seller;

(b) For the standard guarantee plan, the seller must use a third party servicing agent approved by the Agency. The servicing agent will:

(1) Provide the Agency a copy of the recorded Land Contract;

(2) Handle transactions relating to the Land Contract between the buyer and seller;

(3) Receive Land Contract installment payments from the buyer and send them to the seller;

(4) Provide evidence to the Agency that property taxes are paid and insurance is kept current on the security property;

(5) Perform a physical inspection of the farm each year during the term of the guarantee, and provide an annual inspection report to the Agency;

(6) Obtain from the buyer a current balance sheet, income statement, cash flow budget, and any additional information needed, perform, and provide the Agency an analysis of the buyer's financial condition on an annual basis;

(7) Notify the Agency on March 31 and September 30 of each year of the outstanding balance on the Land Contract and the status of payment;

(8) Send a notice of payment due to the buyer at least 30 days prior to the installment due date;

(9) Notify the Agency and the seller if the buyer defaults;

(10) Service delinquent accounts as specified in § 763.20(b); and

(11) Perform other duties as required by State law and as agreed to by the buyer and the seller.

§ 763.19 Contract modification.

(a) The seller and buyer may modify the land contract to lower the interest rate and corresponding amortized payment amount without Agency approval.

(b) With prior written approval from the Agency, the seller and buyer may modify the land contract provided that, in addition to a feasible plan for the upcoming operating cycle, a feasible plan can be reasonably projected throughout the remaining term of the guarantee. Such modifications may include but are not limited to:

(1) Deferral of installments,

(2) Leasing or subleasing, and

(3) Partial releases. All proceeds from a partial release or royalties from mineral extraction must be applied to a prior lien, if one exists, and in addition, the same amount must be credited to the principal balance of the land contract.

(4) Transfer and assumption. If the guarantee is to remain in effect, any transfer of the property and assumption of the guaranteed debt must be made to an eligible buyer for the Land Contract Guarantee Program as specified in § 763.5(b), and must be approved by the Agency in writing. If an eligible buyer for transfer and assumption cannot be found, the Deputy Administrator for Farm Loan Programs may make an exception to this requirement when in the Government's best financial interests.

(5) Assignment. The seller may not assign the contract to another party without written consent of the Agency.

(c) Any contract modifications other than those listed above must be approved by the Deputy Administrator for Farm Loan Programs, and will only be approved if such action is determined permissible by law and in the Government's best financial interests.

§ 763.20 Delinquent servicing and collecting on guarantee.

(a) *Prompt payment guarantee plan.* If the buyer fails to pay an annual amortized installment or a portion of an installment on the contract or taxes or insurance when due, the escrow agent:

(1) Must make a written demand on the buyer for payment of the defaulted amount within 30 days of the missed payment, taxes, or insurance and send a copy of the demand letter to the Agency and to the seller; and

(2) Must make demand on the Agency within 90 days from the original payment, taxes, or insurance due date, for the missed payment in the event the buyer has not made the payment.

(b) *Standard guarantee plan.* If the buyer fails to pay an annual amortized installment or a portion of an installment on the contract, then the seller has the option of either liquidating the real estate, or having the amount of the loss established by the Agency by an appraisal of the real estate. For either option, the servicing agent:

(1) Must make a written demand on the buyer for payment of the defaulted amount within 30 days of the missed payment, and send a copy of the demand letter to the Agency and to the seller; and

(2) Must immediately inform the Agency which option the seller has chosen for establishing the amount of the loss, in the event the buyer does not make the payment within 60 days of the demand letter.

(i) *Liquidation method.* If the seller chooses the liquidation method, the servicing agent will:

(A) Submit a liquidation plan to the Agency within 120 days from the missed payment for approval prior to any liquidation action. The Agency may require and pay for an appraisal prior to approval of the liquidation plan.

(B) Complete liquidation within 12 months of the missed installment unless prevented by bankruptcy, redemption rights, or other legal action.

(C) Credit an amount equal to the sale price received in a liquidation of the security property, with no deduction for expenses, to the principal balance of the land contract.

(D) File a loss claim immediately after liquidation, which must include a complete loan ledger.

(E) Base the loss claim amount on the appraisal method if the property is reacquired by the seller, through liquidation.

(ii) *Appraisal method.* If the seller chooses to have the loss amount established by appraisal rather than liquidation, the Agency will complete an appraisal on the real estate, and the loss claim amount will be based on the difference between the appraised value at the time the loss is calculated and the unpaid principal balance of the land contract at that time.

(A) The only administrative appeal allowed under § 761.6 of this chapter related to the resulting appraisal amount will be a determination of whether the appraisal is Uniform Standards of Professional Appraisal Practice (USPAP) compliant.

(B) The seller will give the Agency a lien on the security property in the amount of the loss claim payment. If the property sells within 5 years from the date of the loss payment for an amount greater than the appraised value used to establish the loss claim amount, the seller must repay the difference, up to the amount of the loss claim. For purposes of determining the amount to be repaid (recapture), the market value of the property may be reduced by the value of certain capital improvements, as specified in § 766.202(a)(1)—(3) of this chapter, made by the seller to the property in the time period from the loss claim to final disposition. If the property is not sold within 5 years from the date of the loss payment, the Agency will release the lien and the seller will have no further obligation to the Agency.

§ 763.21 Establishment of Federal debt and Agency recovery of loss claim payments.

(a) Any amount paid by FSA as a result of an approved loss claim is immediately due and payable by the buyer after FSA notifies the buyer that a loss claim has been paid to the seller. If the debt is not restructured into a repayment plan or the obligation otherwise cured, FSA may use all remedies available, including offset as authorized by the Debt Collection Improvement Act of 1996, to collect the debt.

(1) Interest on the debt will be at the FLP non-program real property loan rate in effect at the time of the first Agency payment of a loss claim.

(2) The debt may be scheduled for repayment consistent with the buyer's repayment ability, not to exceed 7 years. Before any payment plan can be approved, the buyer must provide the Agency with the best lien obtainable on all of the buyer's assets. This includes the buyer's ownership interest in the real estate under contract for guarantees using the prompt payment guarantee plan. When the buyer is an entity, the best lien obtainable will be taken on all of the entity's assets, and all assets owned by individual members of the entity, including their ownership interest in the real estate under contract.

(b) Annually, buyers with an Agency approved repayment plan under this section will supply the Agency a current balance sheet, income statement, cash flow budget, complete copy of Federal income tax returns, and any additional information needed to analyze the buyer's financial condition.

(c) If a buyer fails to make required payments to the Agency as specified in the approved repayment plan, the debt will be treated as a non-program loan debt, and servicing will proceed as specified in § 766.351(c) of this chapter.

§ 763.22 Negligence and negligent servicing.

(a) The Agency may deny a loss claim in whole or in part due to negligence that contributed to the loss claim. This could include, but is not limited to:

(1) The escrow and servicing agent failing to seek payment of a missed installment from the buyer within the prescribed timeframe or otherwise does not enforce the terms of the land contract;

(2) Losing the collateral to a third party, such as a taxing authority, prior lien holder, *etc;*

(3) Not performing the duties and responsibilities required of the escrow or servicing agent;

(4) The seller's failure to disclose environmental issues; or

(5) Any other action in violation of the land contract or guarantee agreement that does not terminate the guarantee.

(b) [Reserved]

§ 763.23 Terminating the guarantee.

(a) The guarantee and the Agency's obligations will terminate at the earliest of the following circumstances:

(1) Full payment of the land contract;

(2) Agency payment to the seller of 3 annual installments plus property taxes and insurance, if applicable, under the prompt payment guarantee plan, if not repaid in full by the buyer. An Agency approved repayment plan will not constitute payment in full until such time as the entire amount due for the Agency approved repayment plan is paid in full;

(3) Payment of a loss claim through the standard guarantee plan;

(4) Sale of real estate without guarantee being properly assigned;

(5) The seller terminates the land contract for reasons other than monetary default; or

(6) If for any reason the land contract becomes null and void.

(b) If none of the events in paragraph (a) of this section occur, the guarantee will automatically expire, without notice, 10 years from the effective date of the guarantee.

PART 764—DIRECT LOAN MAKING

■ 5. The authority citation for part 764 continues to read as follows:

Authority: 5 U.S.C. 301 and 7 U.S.C. 1989.

■ 6. Amend § 764.51 by revising paragraph (b)(3) to read as follows:

§ 764.51 Loan application.

* * * * *

(b) * * *

(3) A written description of the applicant's farm training and experience, including each entity member who will be involved in managing or operating the farm. Farm experience of the applicant, without regard to any lapse of time between the farm experience and the new application, may be included in the applicant's written description. If farm experience occurred more than 5 years prior to the date of the new application, the applicant must demonstrate sufficient on-the-job training or education within the last 5 years to demonstrate managerial ability;

* * * * *

■ 7. Amend § 764.101 by revising paragraph (i)(3) to read as follows:

§ 764.101 General eligibility requirements.

* * * * *

(i) * * *

(3) *Farming experience.* For example, the applicant has been an owner, manager, or operator of a farm business for at least one entire production cycle. Farm experience of the applicant, without regard to any lapse of time between the farm experience and the new application, will be taken into consideration in determining loan eligibility. If farm experience occurred more than 5 years prior to the date of the new application, the applicant must demonstrate sufficient on-the-job training or education within the last 5 years to demonstrate managerial ability.

* * * * *

■ 8. Amend § 764.102 by revising paragraph (f) to read as follows:

§ 764.102 General limitations.

* * * * *

(f) Loan funds will not be used to establish or support a non-eligible enterprise, even if the non-eligible enterprise contributes to the farm. Notwithstanding this limitation, an EM loan may cover qualified equine losses as specified in subpart I of this part.

■ 9. Amend § 764.352 by adding paragraph (l) to read as follows:

§ 764.352 Eligibility requirements.

* * * * *

(l) Whose primary enterprise is to breed, raise, and sell horses may be eligible under this part.

■ 10. Amend § 764.353 by adding paragraph (g) to read as follows:

§ 764.353 Limitations.

* * * * *

(g) Losses associated with horses used for racing, showing, recreation, or pleasure or loss of income derived from racing, showing, recreation, boarding, or pleasure are not considered qualified losses under this section.

■ 11. Amend § 764.355 by revising paragraph (b) to read as follows:

§ 764.355 Security requirements.

* * * * *

(b) EM loans made as specified in § 764.351(a)(2) and (b) must generally comply with the general security requirements established in §§ 764.103, 764.104, and 764.255(b). These general security requirements, however, do not apply to equine loss loans to the extent that a lien is not obtainable or obtaining a lien may prevent the applicant from carrying on the normal course of business. Other security may be considered for an equine loss loan in the order of priority as follows:

(1) Real estate,

(2) Chattels and crops, other than horses,

(3) Other assets owned by the applicant,

(4) Third party pledges of property not owned by the applicant,

(5) Repayment ability under paragraph (c) of this section.

* * * * *

■ 12. Amend paragraph § 764.356 by adding paragraph (c) to read as follows:

§ 764.356 Appraisal and valuation requirements.

* * * * *

(c) In the case of an equine loss loan:

(1) The applicant's Federal income tax and business records will be the primary source of financial information. Sales receipts, invoices, or other official sales records will document the sales price of individual animals.

(2) If the applicant does not have 3 complete years of business records, the Agency will obtain the most reliable and reasonable information available from sources such as the Cooperative Extension Service, universities, and breed associations to document production for those years for which the applicant does not have a complete year of business records.

Signed on November 23, 2011.

Bruce Nelson,

Administrator, Farm Service Agency.

[FR Doc. 2011–31046 Filed 12–1–11; 8:45 am]

BILLING CODE 3410–05–P

DEPARTMENT OF TRANSPORTATION

Federal Aviation Administration

14 CFR Part 29

[Docket No. FAA–2009–0413; Amdt. No. 29–55]

RIN 2120–AJ51

Fatigue Tolerance Evaluation of Metallic Structures

AGENCY: Federal Aviation Administration (FAA), DOT.

ACTION: Final rule.

SUMMARY: This rule amends the airworthiness standards for fatigue tolerance evaluation (FTE) of transport category rotorcraft metallic structures. This revises the FTE safety requirements to address advances in structural fatigue substantiation technology for metallic structures. This provides an increased level of safety by avoiding or reducing the likelihood of the catastrophic fatigue failure of a metallic structure. These increased safety requirements will help ensure that should serious accidental damage occur during manufacturing or within the operational life of the rotorcraft, the remaining structure could withstand, without failure, any fatigue loads that are likely to occur, until the damage is detected or the part is replaced. Besides improving the safety standards for FTE of all principal structural elements (PSEs), the amendment is harmonized with international standards.

DATES: Effective January 31, 2012.

ADDRESSES: For information on where to obtain copies of rulemaking documents and other information related to this final rule, see ''How To Obtain Additional Information'' at the end of the **SUPPLEMENTARY INFORMATION** section of this document.

FOR FURTHER INFORMATION CONTACT: For technical questions concerning this action, contact Sharon Y. Miles, Regulations and Policy Group, Rotorcraft Directorate, ASW–111, Federal Aviation Administration, 2601 Meacham Blvd., Fort Worth, Texas 76137–0111; telephone number (817) 222–5122; facsimile (817) 222–5961; email *sharon.y.miles@faa.gov.*

For legal questions concerning this action, contact Steve C. Harold, Directorate Counsel, ASW–7GI, Federal Aviation Administration, 2601 Meacham Blvd., Fort Worth, Texas 76137–0007; telephone (817) 222–5099; facsimile (817) 222–5945; email *steve.c.harold@faa.gov.*

SUPPLEMENTARY INFORMATION:

Authority for This Rulemaking

The FAA's authority to issue rules on aviation safety is found in Title 49 of the United States Code. Subtitle I, Section 106 describes the authority of the FAA Administrator. Subtitle VII, Aviation Programs, describes in more detail the scope of the agency's authority.

This rulemaking is issued under the authority described in Subtitle VII, Part A, Subpart III, Section 44701, ''General Requirements,'' Section 44702, ''Issuance of Certificates,'' and Section 44704, ''Type Certificates, Production Certificates, and Airworthiness Certificates.'' Under section 44701, the FAA is charged with prescribing regulations and minimum standards for practices, methods, and procedures the Administrator finds necessary for safety in air commerce. Under section 44702, the Administrator may issue various certificates including type certificates, production certificates, air agency certificates, and airworthiness certificates. Under section 44704, the Administrator must issue type certificates for aircraft, aircraft engines, propellers, and specified appliances when the Administrator finds the product is properly designed and manufactured, performs properly, and meets the regulations and minimum standards prescribed under section 44701(a). This regulation is within the scope of these authorities because it will promote the safety of transport category rotorcraft metallic structures by updating the existing minimum prescribed standards, used during the type certification process, to address advances in metallic structural fatigue substantiation technology. It will also harmonize this standard with international standards for evaluating the fatigue strength of transport category rotorcraft metallic primary structural elements.

I. Overview of Final Rule

This rule for rotorcraft metallic structures revises fatigue evaluation requirements to improve safety and reduce the occurrence of catastrophic fatigue failures of metallic structures. Some of the more significant revisions are summarized below.

We have determined that the current rule is too prescriptive by directing the applicant to use specific methodologies to meet the safety objective. This approach has had the effect of lessening the significance of the basic objective of evaluating fatigue tolerance because in practice, the primary focus is on means of compliance. Thus, the entire rule has been rewritten to stress the performance objectives and deemphasize specific methodologies. We deleted all references to specific FTE methods (that is, flaw tolerant safe-life, fail-safe, and safe-life). The words ''flaw tolerant'' and ''fail-safe'' have different meanings depending on usage. Instead, we now use ''fatigue tolerance'' which encompasses the entire fatigue evaluation process (including crack initiation, crack growth, and final failure) with or without the influence of damage.

Industry currently uses a variety of FTE methods; all of these methods have merit and could potentially be effective, depending on the specifics of the damage being addressed. To reflect this flexibility, the amended rule requires a specific result (that is, inspection, retirement times, or equivalent means to avoid catastrophic failure), but does not specify the method to achieve this result. However, this rule does require that all methods be validated by testing, and that the Administrator must approve the methodology used for compliance.

We have determined that, in general, standards for the safest metallic structures use both inspections and

retirement times together to mitigate the risk of catastrophic failure due to fatigue. Consequently, § 29.571(h) requires inspections and retirement times or approved equivalent means to be established to avoid catastrophic failure, resulting in an increased level of safety for metallic structures.

Also, we added a key element to the FTE: the identification of all threats that need to be considered to quantify damage to metallic structures. Accordingly, paragraph (e)(4) of § 29.571 requires a threat assessment for all identified PSEs.

We recognize that an inspection approach may not be possible for some kinds of damage. Thus, we include a provision that would not require inspections if effective inspections cannot be established within the limitations of geometry, inspectability, or good design practice. In this instance, other FAA approved procedures must be implemented to minimize the probability of the damage occurring or contributing to a catastrophic failure.

The following table contains an overview of the costs and benefits associated with the rule.

TABLE 1—PRESENT VALUE BENEFITS AND COSTS—27 YEARS

Benefits (27 years) accidents averted		Costs (millions) (27 years)	Benifits minus costs (27 years)	Revised rule effectiveness (percent)
Number	$Value (millions)			
2	$5.6	$2.9	$2.7	22
5	14.1	2.9	11.2	56
9	25.4	2.9	22.5	100

03/16/2011

II. Background

Rotorcraft fatigue strength reduction or failure may occur due to aging, temperature, moisture absorption, impact damage, or other factors. Since a reduction in strength of any primary structural element can lead to a catastrophic failure, it is important to evaluate fatigue tolerance.

A FTE provides a strength assessment of PSEs. It requires the applicant to evaluate the strength of various rotorcraft components including—but not limited to—rotors, rotor drive systems between the engines and the main and tail rotor hubs, controls, fuselage, fixed and movable control surfaces, engine and transmission mountings, landing gear, and their related primary attachments. A FTE of PSEs is performed to determine the appropriate required inspections and retirement times to avoid catastrophic failure during the operational life of the rotorcraft.

The current regulations do not address advances in structural fatigue substantiation technology for metallic structures (for example, advances in the safe-life methodology, and developments in crack growth methodology) required for the unique characteristics of a rotorcraft. This rule addresses those advances and amends the airworthiness standards for FTE of transport category rotorcraft metallic structures.

Fatigue Evaluation Techniques and Requirements

In the 1950s, safe-life methodology, such as described in AC 27–1B, MG 11, was used to evaluate the occurrence of fatigue conditions in rotorcraft dynamic components to establish retirement times. Historically, this methodology has provided satisfactory reliability for transport category rotorcraft. In addition, manufacturers included routine inspections in their maintenance programs to detect damage, such as scratches, corrosion, wear, or cracks. These inspections were not based on analysis or tests, but rather on experience with similar designs, engineering judgment, and good design practices. The inspections helped minimize the effect of damage when the rotorcraft was being operated.

In the 1980s, industry recognized that a higher reliability for fatigue critical structural components may be achieved by considering the strength reducing effects of damage that can occur during manufacture or operation. About that same time, rotorcraft manufacturers were introducing advanced composite materials for fatigue critical components in their rotorcraft.

The introduction of composites led manufacturers and regulatory authorities to develop a more robust safe-life methodology by considering the specific static and fatigue-strength reduction effects due to aging, temperature, moisture absorption, impact damage, and other factors. Furthermore, where clearly visible damage resulted from impact or other sources, inspection programs were developed to maintain safety.

With these developments, crack growth methodology has been used successfully for solving short-term airworthiness issues in metallic structures of rotorcraft and in the certification of civil and military transport aircraft. These advances in design, analytical methods, and other industry practices have made it feasible to address certain types of damage that could result in fatigue failure.

Consistent with these technological advancements, the regulatory requirements of § 29.571 were substantially revised by Amendment 29–28 (54 FR 43930, October 27, 1989). Although Amendment 29–28 became effective in 1989, it has rarely been used for certification of completely new rotorcraft designs because there have been only a limited number of new rotorcraft designs since it was adopted. However, despite the limited opportunity for actual application of Amendment 29–28, the rotorcraft community's general understanding of rotorcraft FTE has developed considerably. Also, there has been much discussion within the technical community about the meaning of Amendment 29–28 and the merits of its prescribed fatigue tolerance methodologies.

These methodologies, discussed in Amendment 29–28, have been the subject of a series of meetings between the FAA, the rotorcraft industry, and the Technical Oversight Group for Aging Aircraft (TOGAA). These meetings and the industry's position concerning rotorcraft fatigue and damage tolerance were documented in a White Paper, ''Rotorcraft Fatigue and Damage Tolerance.''

The rotorcraft industry White Paper recommended that safe-life methods should be complemented by damage tolerance methods, but also recommended retention of the flaw tolerant safe-life method, introduced in Amendment 29–28, as an available option. However, in 1999, TOGAA recommended that current safe-life methods be complemented by damage tolerance assessment methods and that

the flaw tolerant safe-life method be removed from the regulations. Because both groups recommended various methods of evaluating fatigue, the FAA decided to consider revision of the regulations.

The FAA tasked the Aviation Rulemaking Advisory Committee (ARAC) in 1991 to study the need to revise the regulations on fatigue evaluation in light of advances in technology and operational procedures and to develop regulatory recommendations.

The ARAC working group for this rule evaluated the industry White Paper, TOGAA's recommendations, and the continuing activities and results of rotorcraft damage tolerance research and development. Consequently, the working group recommended changes to the fatigue evaluation requirements for transport category rotorcraft found in 14 CFR 29.571 to address advances in technology and damage tolerance assessment methodologies. ARAC accepted those recommendations and presented them to the FAA. This rule is consistent with ARAC's recommendations.

The Industry White Paper ''Rotorcraft Fatigue and Damage Tolerance,'' prepared for the TOGAA, January 1999, and the TOGAA memo to the FAA, dated 15 March 1999, are located in the docket.

A. Statement of the Problem

Before current Amendment 29–28, there was no requirement to assess the impact of damage on the fatigue performance of any rotorcraft structure. The strategy used to manage fatigue was limited to retirement of the rotorcraft part or component before the probability of crack initiation became significant, and the ''safe-life'' method was used to establish retirement times.

It was generally agreed, based on in-service experience, that not accounting for damage could be a serious shortcoming. Therefore, Amendment 29–28 requires the applicant to consider damage when performing fatigue evaluations unless it establishes that, for a particular structure, damage evaluation cannot be achieved within the limitations of geometry, inspectability, or good design practice. Amendment 29–28 prescribes two new methods to account for damage (''flaw tolerant safe-life'' and ''fail-safe''), referred to as flaw tolerant methods. The original (''safe-life'') method contained in Amendment 29–28 can be used if either of the two new methods requiring damage evaluation is not achievable within the limitations of geometry, inspectability, or good design practice.

Within the context of current § 29.571, the ''flaw tolerant safe-life'' method and the ''fail-safe'' method are considered equivalent options. The ''flaw tolerant safe-life'' method is based on crack initiation time in purposely ''flawed'' PSEs to determine retirement time. The flaw tolerant ''fail-safe'' method is based on a crack growth life in a purposely ''flawed'' PSE to determine inspection requirements.

The ''safe-life'' method is based on a crack initiation time in a ''non-flawed'' PSE to determine a retirement life. Although the ''safe-life'' method does not explicitly account for any damage, under current § 29.571, it is the prescribed default fatigue evaluation method if the applicant shows that neither of the flaw tolerant methods can be achieved within the limitations of geometry, inspectability, or good design practice.

One of the primary issues the working group addressed was the equivalency of the two flaw tolerant methods. While both can be used to assess damage, their equivalency, from a technical perspective, is difficult to evaluate without specific factual details. To address this concern, the working group considered two issues: establishing inspection requirements using the flaw tolerant safe-life method, and establishing retirement times using the fail-safe method. While both are theoretically possible, their effectiveness cannot be evaluated without considering the details of a specific application. Additionally, while using the flaw tolerant safe-life method for establishing an inspection interval is not within the intent of the Amendment 29–28, the fail-safe method for establishing retirement times has been accepted as meeting its intent.

B. Related Actions

The FAA has a separate rulemaking activity to address FTE of a composite structure. Because rotorcraft manufacturers increased the use of advanced composite materials for their rotorcraft structural components, we determined that a separate requirement specific to composite structures is required to address the unique characteristics and structural capability of composite structures.

C. Summary of the NPRM

The FAA published the NPRM for this rule in the **Federal Register** on March 12, 2010 (75 FR 11799). The comment period for the NPRM was scheduled to close on June 10, 2010. In response to a European Aviation Safety Agency (EASA) request, the FAA extended the comment period closing date to July 30, 2010 (published in the **Federal Register** May 5, 2010, 75 FR 24501). The FAA received 3 comments from Transport Canada.

D. General Overview of Comments

Although the 3 comments are discussed more fully in the discussion section of this final rule, in summary, they deal with the following two subjects:

- Acceptability in rotorcraft of some PSE structures crack growth methodology allowed in fixed-wing aircraft; and
- Suggested rewording of paragraph (f) for clarification.

III. Discussion of Public Comments and Final Rule

A. Acceptability in Rotorcraft of Some PSE Structures Crack Growth Methodology Allowed in Fixed-Wing Aircraft

Transport Canada asked if some PSEs on rotorcraft, especially airframe structures, may be considered to meet the inspection requirement without being subjected to a requirement for retirement based solely on the crack growth methodology. The commenter believes that the crack growth methodology may be used for fixed-wing aircraft to determine inspection intervals (and, in the process, inspection techniques) without requiring the retirement of the PSEs.

Because of the vastly different dynamic characteristics of rotorcraft when compared to fixed-wing aircraft, we do not concur with the commenter's proposal. The rule requires both appropriate inspections and a retirement time. If an inspection cannot be established within the limits of geometry, inspectability, or good design practice, then the applicant must establish supplemental procedures in conjunction with the PSE retirement time. This rule does not allow inspections only for PSEs. The rule requires inspections and retirement times. If inspections cannot be established within certain conditions, then supplemental procedures, in conjunction with the PSE retirement time, must be established. Therefore, the FAA is adopting the rules as proposed in the NPRM.

B. Rewording of Paragraph (f) for Clarification

Transport Canada suggested that paragraph (f) needs rewording to avoid possible misunderstanding or misinterpretation. It comments that:

- The term ''allowable damage'' has been widely used by some aircraft

manufacturers to set a limit for the damages, below which there is no need for repair. The commenter suggested this sentence should be reworded to clearly indicate that the residual strength of the remaining structures is required to successfully carry limit loads.

• If the second sentence of paragraph (f) is intended to require a determination of the critical size of damage in order to determine inspection intervals, the phrase ''within its operational life'' should be removed. However, if it is intended to require limit loads to be applied to ensure that, within an inspection interval, the remaining structures would carry successfully the limit loads, the phrase ''within its operational life'' should be replaced with ''within an inspection interval.''

As used in the proposal, the FAA intends the ''allowable damage'' to be the maximum damage at which the rotorcraft structure is capable of carrying the limit load. This ''allowable damage'' would be determined during the FTE. Once the rotorcraft is in service, any damage detected during an inspection interval must be repaired or the part must be replaced before further flight.

The residual strength is based on the maximum damage determined from the threat assessment for which the structure retains its limit load capability. During the damage growth, the damage may be undetected for some time between inspection intervals. Thus, the applicant must show that the structure retains its limit load capability for a determined maximum damage when evaluating the residual strength in order to avoid a catastrophic failure. To clarify this requirement, we have reworded paragraph (f).

IV. Regulatory Notices and Analyses

A. Regulatory Evaluation

Changes to Federal regulations must undergo several economic analyses. First, Executive Order 12866 and Executive Order 13563 directs that each Federal agency shall propose or adopt a regulation only upon a reasoned determination that the benefits of the intended regulation justify its costs. Second, the Regulatory Flexibility Act of 1980 (Pub. L. 96–354) requires agencies to analyze the economic impact of regulatory changes on small entities. Third, the Trade Agreements Act (Pub. L. 96–39) prohibits agencies from setting standards that create unnecessary obstacles to the foreign commerce of the United States. In developing U.S. standards, this Trade Act requires agencies to consider international standards and, where appropriate, that they be the basis of U.S. standards. Fourth, the Unfunded Mandates Reform Act of 1995 (Pub. L. 104–4) requires agencies to prepare a written assessment of the costs, benefits, and other effects of proposed or final rules that include a Federal mandate likely to result in the expenditure by State, local, or Tribal governments, in the aggregate, or by the private sector, of $100 million or more annually (adjusted for inflation with base year of 1995). This portion of the preamble summarizes the FAA's analysis of the economic impacts of this final rule. We suggest readers seeking greater detail read the full regulatory evaluation, a copy of which we have placed in the docket for this rulemaking.

In conducting these analyses, the FAA has determined that this final rule:

(1) Has benefits that justify its costs;

(2) Is not an economically ''significant regulatory action'' as defined in section 3(f) of Executive Order 12866;

(3) Is ''non-significant'' as defined in DOT's Regulatory Policies and Procedures;

(4) Will have a non-significant economic impact on a substantial number of small entities;

(5) Will not have a significant effect on international trade; and

(6) Will not impose an unfunded mandate on state, local, or Tribal governments, or on the private sector by exceeding the monetary threshold identified.

These analyses are summarized below.

Total Benefits and Costs of This Rulemaking

The estimated total cost of this final rule is about $9.0 million ($2.9 million in present value at 7% for 27 years). The estimated potential benefits of avoiding at least two of the 9 avoidable historical transport category helicopter accidents are worth about $12.9 million ($5.6 million in present value).

Who is potentially affected by this rulemaking?

• Manufacturers of U.S.-registered part 29 rotorcraft, and

• Operators of part 29 rotorcraft.

Our Cost Assumptions and Sources of Information.

• Discount rate—7%.

• Period of analysis of 27 years equals the 27 years of National Transportation Safety Board accident history. During this period manufacturers will seek new certifications for six part 29 rotorcraft and the total new production helicopters are estimated to be about 1,300.

• Value of fatality avoided—$5.8 million (Source: U.S. Department of Transportation, *Treatment of the Value of a Statistical Life in Department Analyses,* February 5, 2008.)

Benefits of This Rule

The benefits of this final rule consist of the value of lives and property saved due to avoiding accidents involving part 29 rotorcraft. Nine Transport Category rotorcraft accidents could have been avoided by this rule over the past 27-year historical period. The potential benefit of this final rule will be to avoid at least two of these accidents with a value of approximately $12.9 million ($5.6 million in present value).

Cost of This Rule

We estimate the costs of this final rule to be about $9.0 million ($2.9 million in present value) over the 27-year analysis period. Manufacturers of 14 CFR part 29 rotorcraft will incur costs of $532,000 ($293,000 in present value) and operators of 14 CFR part 29 helicopters will incur costs of $8.5 million ($2.6 million in present value).

B. Regulatory Flexibility Determination

The Regulatory Flexibility Act of 1980 (RFA) establishes ''as a principle of regulatory issuance that agencies shall endeavor, consistent with the objective of the rule and of applicable statutes, to fit regulatory and informational requirements to the scale of the business, organizations, and governmental jurisdictions subject to regulation.'' To achieve that principle, the RFA requires agencies to solicit and consider flexible regulatory proposals and to explain the rationale for their actions. The RFA covers a wide-range of small entities, including small businesses, not-for-profit organizations and small governmental jurisdictions.

Agencies must perform a review to determine whether a proposed or final rule will have a significant economic impact on a substantial number of small entities. If the agency determines that it will, the agency must prepare a regulatory flexibility analysis as described in the Act.

However, if an agency determines that a proposed or final rule is not expected to have a significant economic impact on a substantial number of small entities, section 605(b) of the 1980 RFA provides that the head of the agency may so certify and a regulatory flexibility analysis is not required. The certification must include a statement providing the factual basis for this

determination, and the reasoning should be clear.

No comments were received on the Regulatory Flexibility Determination in the NPRM.

This final rule will affect rotorcraft manufacturers and rotorcraft operators. Therefore, the effect on potential small entities is analyzed separately for helicopter manufacturers and operators.

Part 29 Helicopter Manufacturers

Size Standards

Size standards for small entities are published by the Small Business Administration (SBA) on their Web site at *http://www.sba.gov/size.* The size standards used herein are from ''SBA U.S. Small Business Administration, Table of Small Business Size Standards, Matched to North American Industry Classification System Codes''. The Table is effective August 22, 2008 and uses the 2007 NAICS codes.

Helicopter manufacturers are listed in the above Table under Sector 31–33—Manufacturing; Subsector 336—Transportation Equipment Manufacturing; NAICS Code 336411—Aircraft Manufacturing. The small entity size standard is 1,500 employees.

Table R1 shows the three U.S. part 29 helicopter manufacturers, Bell, Erickson Air Crane and Sikorsky. Erickson Air Crane, with 800 employees, is the only part 29 helicopter manufacturer to qualify as a small entity. In addition, Erickson Air Crane currently specializes in the production of the S–64 Sky Crane and is not expected to obtain new helicopter certifications. Therefore, it is not anticipated that this final rule will have a significant economic impact on a substantial number of part 29 helicopter manufacturers.

Table R1

U.S. Part 29 Helicopter Manufacturers

Manufacturer					Annual		
No.	Name	Ultimate Owner	Employees	Small Entity	Revenues (AR)	Proposal Costs (PC)	% PC of AR
1	Bell Helicopter (A)	Textron	42,000	No	$14.2B		
2	Erickson Air Crane (B)	None	800	Yes	N.A.		
3	Sikorsky (C)	UTC	223,100	No	$58.7B		

Notes:

(A) http://www.Textron.com/about/company

(B) http://www.tmcnet.com/usubmit/2009/02/05/3967898.htm

(C) http://www.utc.com/about_utc/fast_facts.lhtml

03/05/2005

Part 29 Helicopter Operators

Size Standards

While there are only three part 29 helicopter manufacturers in the United States, there are many operators of part 29 helicopters. Each of these operators may provide only one, or many services. These services range from off-shore transportation, executive transportation, fire-fighting services, Emergency Medical Services (EMS), and training to maintenance, repair, and modification services.

The SBA lists small entity size standards for air transportation under Sector 44–45, Retail Trade, Subsector 481, Air Transportation. The small entity size standards are 1,500 employees for scheduled and nonscheduled charter passenger and freight transportation. This standard is $28.0 million annually if the passenger or freight air transportation is offshore marine air transportation. Finally, the small entity size standard for other—non-scheduled air transportation is $7.0 million annually.

PHI, Inc. is one of the largest helicopter operators in the world. According to PHI's 2007 Annual Report, in 2007 they employed approximately 2,254 full time employees and had annual revenues of $446.4 million.

We have been unable to obtain the number of operators and the number of employees per operator. Therefore, we take the worst case scenario and assume that all operators will meet the SBA definition of a small entity. Thus, this final rule will affect a substantial

number of transport category helicopter operators.

Based on the information received from industry representatives, the cost of this final rule to a part 29 helicopter operator will be $1,600 for an inspection that must be performed every three years on each part 29 helicopter that is certificated under this final rule. This will be approximately $550 per helicopter per year. According to Bell Helicopter Product Specifications for the Bell 430 (a part 29 helicopter), January 2005, the direct operating cost of one flight hour is $671.44. Therefore, the final rule will add less than one direct hour of operating costs per year to a typical part 29 helicopter. Although this will be an increase in costs, this will not be a substantial increase in costs.

Consequently, as the FAA Administrator, I certify that this final rule will not have a significant economic impact on a substantial number of part 29 rotorcraft manufacturers or operators.

C. International Trade Impact Assessment

The Trade Agreements Act of 1979 (Pub. L. 96–39), as amended by the Uruguay Round Agreements Act (Pub. L. 103–465), prohibits Federal agencies from establishing standards or engaging in related activities that create unnecessary obstacles to the foreign commerce of the United States. Pursuant to these Acts, establishing standards is not considered an unnecessary obstacle to the foreign commerce of the United States, so long as the standard has a legitimate domestic objective, such as the protection of safety, and does not operate in a manner that excludes imports that meet this objective. The statute also requires consideration of international standards and, where appropriate, that they be the basis for U.S. standards.

The FAA has assessed the potential effect of this final rule and incorporates international standards in this regulation and therefore is in compliance with the Trade Agreements Act.

D. Unfunded Mandates Assessment

Title II of the Unfunded Mandates Reform Act of 1995 (Pub. L. 104–4) requires each Federal agency to prepare a written statement assessing the effects of any Federal mandate in a proposed or final agency rule that may result in an expenditure of $100 million or more (adjusted annually for inflation) in any 1 year by State, local, and Tribal governments, in the aggregate, or by the private sector; such a mandate is deemed to be a ''significant regulatory action.'' The FAA currently uses an inflation-adjusted value of $143.1 million in lieu of $100 million. This final rule does not contain such a mandate.

E. Paperwork Reduction Act

The Paperwork Reduction Act of 1995 requires that the FAA consider the impact of paperwork and other information collection burdens imposed on the public. According to the 1995 amendments to the Paperwork Reduction Act (5 CFR 1320.8(b)(2)(vi)), an agency may not collect or sponsor the collection of information, nor may it impose any information collection requirement unless it displays a currently valid Office of Management and Budget (OMB) control number.

This final rule will impose the following new information collection requirements. As required by 44 U.S.C. 3507(d) of the Paperwork Reduction Act of 1995, the FAA has submitted the information collection requirements associated with this rule to OMB for its review. Notice of OMB approval for this information collection will be published in a future **Federal Register** document.

Summary: This rule revises the FTE safety requirements to address advances in structural fatigue substantiation technology for metallic structures. An increased level of safety will be provided by avoiding or reducing catastrophic fatigue failures of metallic structures. These increased safety requirements will help ensure that should accidental damage occur during manufacturing or within the operational life of the rotorcraft, the remaining structure could, without failure, withstand fatigue loads that are likely to occur until the damage is detected and repaired or the part is replaced. In addition to improving the safety standards for FTE of all PSE, the amendment would lead to a harmonized international standard.

Public comments: No public comments were received on the information collection requirements discussed in the NPRM.

Use: To obtain type certification of a rotorcraft, an applicant must show that the rotorcraft complies with specific certification requirements. To show compliance, the applicant must submit substantiating data. FAA engineers or designated engineering representatives from industry will review the required data submittals to determine if the rotorcraft complies with the applicable minimum safety requirements for fatigue critical rotorcraft metallic structures and that the rotorcraft has no unsafe features in the metallic structures.

Respondents (including number of): The likely respondents to this proposed information requirement are applicants for certification of fatigue critical metallic parts for transport category helicopters. A conservative estimate of the number of applicants affected by this amendment would average 2 certification applicants every 10 years.

Frequency: The frequency of collection of this information is established as needed by the respondent to meet their certification schedule. The respondent must submit the required information prior to type certification, which can span a number of years.

Annual Burden Estimate: There will be 71.7 annual certification reporting and record keeping hours. The corresponding annual inspection hours are 197.1 (see table 12–1). The total annual certification reporting and record keeping hours are $7,167. The corresponding annual inspection costs are $11,827 (see table 13–1).

TABLE 12–1—ESTIMATED HOUR BURDEN OF INFORMATION COLLECTION REPORTING AND RECORDKEEPING

Item	Number of hours
Certification Reporting and Recordkeeping Hours	
Reporting and Recordkeeping Hours per Certification	322.5
New Certifications	6.0
Total Certification Reporting and Recordkeeping Hours	1,935.0
Number of Years	27.0
Annual Certification Reporting and Recordkeeping Hours	71.7

TABLE 12–1—ESTIMATED HOUR BURDEN OF INFORMATION COLLECTION REPORTING AND RECORDKEEPING—Continued

Item	Number of hours
Inspection Reporting and Recordkeeping Hours	
Reporting and Recordkeeping Hours per Inspection	1.0
Total Aircraft Inspections	5,322.0
Total Inspection Reporting and Recordkeeping Hours	5,322.0
Number of Years	27.0
Annual Inspection Reporting and Recordkeeping Hours	197.1

TABLE 13–1—ESTIMATED HOUR BURDEN AND COSTS OF INFORMATION COLLECTION REPORTING AND RECORDKEEPING

Item	Number of hours/costs
Certification Reporting and Recordkeeping Hours and Costs	
Reporting and Recordkeeping Hours per Certification	322.5
New Certifications	6.0
Total Certification Reporting and Recordkeeping Hours	1,935.0
Unit Cost (Per Hour)	$100
Total Certification Reporting and Recordkeeping Costs	$193,500
Number of Years	27.0
Annual Certification Reporting and Recordkeeping Hours	71.7
Annual Certification Reporting and Recordkeeping Costs	$7,167
Inspection Reporting and Recordkeeping Hours	
Reporting and Recordkeeping Hours per Inspection	1.0
Total Aircraft Inspections	5,322.0
Total Inspection Reporting and Recordkeeping Hours	5,322.0
Unit Cost (Per Inspection)	$60
Total Inspection Reporting and Recordkeeping Costs	$319,320
Number of Years	27.0
Annual Inspection Reporting and Recordkeeping Hours	197.1
Annual Inspection Reporting and Recordkeeping Costs	$11,827

F. International Compatibility

In keeping with U.S. obligations under the Convention on International Civil Aviation, it is FAA policy to conform to International Civil Aviation Organization (ICAO) Standards and Recommended Practices to the maximum extent practicable. The FAA has reviewed the corresponding ICAO Standards and Recommended Practices and has identified no differences with these regulations.

G. Environmental Analysis

FAA Order 1050.1E identifies FAA actions that are categorically excluded from preparation of an environmental assessment or environmental impact statement under the National Environmental Policy Act in the absence of extraordinary circumstances. The FAA has determined this rulemaking action qualifies for the categorical exclusion identified in paragraph 312F and involves no extraordinary circumstances.

H. Regulations Affecting Intrastate Aviation in Alaska

Section 1205 of the FAA Reauthorization Act of 1996 (110 Stat. 3213) requires the FAA, when modifying its regulations in a manner affecting intrastate aviation in Alaska, to consider the extent to which Alaska is not served by transportation modes other than aviation, and to establish appropriate regulatory distinctions. In the NPRM, the FAA requested comments on whether the proposed rule should apply differently to intrastate operations in Alaska. The agency did not receive any comments, and has determined, based on the administrative record of this rulemaking, that there is no need to make any regulatory distinctions applicable to intrastate aviation in Alaska.

V. Executive Order Determinations

A. Executive Order 13132, Federalism

The FAA has analyzed this final rule under the principles and criteria of Executive Order 13132, Federalism. The agency determined that this action will not have a substantial direct effect on the States, or the relationship between the Federal Government and the States, or on the distribution of power and responsibilities among the various levels of government, and, therefore, does not have Federalism implications.

B. Executive Order 13211, Regulations That Significantly Affect Energy Supply, Distribution, or Use

The FAA analyzed this final rule under Executive Order 13211, Actions Concerning Regulations that Significantly Affect Energy Supply, Distribution, or Use (May 18, 2001). The agency has determined that it is not a ''significant energy action'' under the executive order and it is not likely to have a significant adverse effect on the supply, distribution, or use of energy.

VI. How To Obtain Additional Information

A. Rulemaking Documents

An electronic copy of this rulemaking document may be obtained by using the Internet.

1. Search the Federal Docket Management System at *http://www.regulations.gov;*

2. Visit the FAA's Regulations and Policies Web page at *http://www.faa.gov/regulations_policies/or*

3. Access the Government Printing Office's Web page at *http://www.gpoaccess.gov/fr/index.html.*

Copies may also be obtained by sending a request (identified by notice, amendment, or docket number of this rulemaking) to the Federal Aviation Administration, Office of Rulemaking, ARM–1, 800 Independence Avenue SW., Washington, DC 20591, or by calling (202) 267–9680.

B. Comments Submitted to the Docket

Comments received may be viewed by going to *http://www.regulations.gov* and following the online instructions to search the docket number for this action. Anyone is able to search the electronic form of all comments received into any of the FAA's dockets by the name of the individual submitting the comment (or signing the comment, if submitted on behalf of an association, business, labor union, *etc.*).

C. Small Business Regulatory Enforcement Fairness Act

The Small Business Regulatory Enforcement Fairness Act (SBREFA) of 1996 requires FAA to comply with small entity requests for information or advice about compliance with statutes and regulations within its jurisdiction. A small entity with questions regarding this document, may contact its local FAA official, or the person listed under the **FOR FURTHER INFORMATION CONTACT** heading at the beginning of the preamble. To find out more about SBREFA on the Internet, visit *http://www.faa.gov/regulations_policies/rulemaking/sbre_act/.*

List of Subjects in 14 CFR Part 29

Aircraft, Aviation safety.

The Amendment

In consideration of the foregoing, the Federal Aviation Administration amends chapter I of Title 14, Code of Federal Regulations as follows:

PART 29—AIRWORTHINESS STANDARDS: TRANSPORT CATEGORY ROTORCRAFT

■ 1. The authority citation for part 29 continues to read as follows:

Authority: 49 U.S.C. 106(g), 40113, 44701–44702, 44704

■ 2. Revise § 29.571 to read as follows:

§ 29.571 Fatigue Tolerance Evaluation of Metallic Structure.

(a) A fatigue tolerance evaluation of each principal structural element (PSE) must be performed, and appropriate inspections and retirement time or approved equivalent means must be established to avoid catastrophic failure during the operational life of the rotorcraft. The fatigue tolerance evaluation must consider the effects of both fatigue and the damage determined under paragraph (e)(4) of this section. Parts to be evaluated include PSEs of the rotors, rotor drive systems between the engines and rotor hubs, controls, fuselage, fixed and movable control surfaces, engine and transmission mountings, landing gear, and their related primary attachments.

(b) For the purposes of this section, the term—

(1) *Catastrophic failure* means an event that could prevent continued safe flight and landing.

(2) *Principal structural element (PSE)* means a structural element that contributes significantly to the carriage of flight or ground loads, and the fatigue failure of that structural element could result in catastrophic failure of the aircraft.

(c) The methodology used to establish compliance with this section must be submitted to and approved by the Administrator.

(d) Considering all rotorcraft structure, structural elements, and assemblies, each PSE must be identified.

(e) Each fatigue tolerance evaluation required by this section must include:

(1) In-flight measurements to determine the fatigue loads or stresses for the PSEs identified in paragraph (d) of this section in all critical conditions throughout the range of design limitations required by § 29.309 (including altitude effects), except that maneuvering load factors need not exceed the maximum values expected in operations.

(2) The loading spectra as severe as those expected in operations based on loads or stresses determined under paragraph (e)(1) of this section, including external load operations, if applicable, and other high frequency power-cycle operations.

(3) Takeoff, landing, and taxi loads when evaluating the landing gear and other affected PSEs.

(4) For each PSE identified in paragraph (d) of this section, a threat assessment which includes a determination of the probable locations, types, and sizes of damage, taking into account fatigue, environmental effects, intrinsic and discrete flaws, or accidental damage that may occur during manufacture or operation.

(5) A determination of the fatigue tolerance characteristics for the PSE with the damage identified in paragraph (e)(4) of this section that supports the inspection and retirement times, or other approved equivalent means.

(6) Analyses supported by test evidence and, if available, service experience.

(f) A residual strength determination is required that substantiates the maximum damage size assumed in the fatigue tolerance evaluation. In determining inspection intervals based on damage growth, the residual strength evaluation must show that the remaining structure, after damage growth, is able to withstand design limit loads without failure.

(g) The effect of damage on stiffness, dynamic behavior, loads, and functional performance must be considered.

(h) Based on the requirements of this section, inspections and retirement times or approved equivalent means must be established to avoid catastrophic failure. The inspections and retirement times or approved equivalent means must be included in the Airworthiness Limitations Section of the Instructions for Continued Airworthiness required by Section 29.1529 and Section A29.4 of Appendix A of this part.

(i) If inspections for any of the damage types identified in paragraph (e)(4) of this section cannot be established within the limitations of geometry, inspectability, or good design practice, then supplemental procedures, in conjunction with the PSE retirement time, must be established to minimize the risk of occurrence of these types of damage that could result in a catastrophic failure during the operational life of the rotorcraft.

Issued in Washington, DC, on November 22, 2011.

J. Randolph Babbitt,

Administrator.

[FR Doc. 2011–30941 Filed 12–1–11; 8:45 am]

BILLING CODE 4910–13–P

DEPARTMENT OF TRANSPORTATION

Federal Aviation Administration

14 CFR Part 39

[Docket No. FAA–2011–1328; Directorate Identifier 2011–CE–037–AD; Amendment 39–16880; AD 2011–25–04]

RIN 2120–AA64

Airworthiness Directives; Quest Aircraft Design, LLC Airplanes

AGENCY: Federal Aviation Administration (FAA), DOT.

ACTION: Final rule; request for comments.

SUMMARY: We are adopting a new airworthiness directive (AD) for certain Quest Aircraft Design, LLC (Quest) Model Kodiak 100 airplanes. This AD requires you to inspect the torque of the inertial particle separator (IPS) bolts; correct the torque, if necessary; replace the IPS bolts with new IPS bolts within a certain time; and install safety wire around the new IPS bolts. This AD was prompted by five instances where a loose IPS bolt was found on the right-hand side of the engine bypass door attachment. This condition, if not corrected, could lead to an inoperable bypass door, which could result in engine inlet icing with consequent loss of engine power and forced landing. We are issuing this AD to correct the unsafe condition on these products.

DATES: This AD is effective December 19, 2011.

The Director of the Federal Register approved the incorporation by reference of certain publications listed in the AD as of December 19, 2011.

We must receive comments on this AD January 17, 2012.

ADDRESSES: You may send comments, using the procedures found in 14 CFR 11.43 and 11.45, by any of the following methods:

- *Federal eRulemaking Portal:* Go to *http://www.regulations.gov.* Follow the instructions for submitting comments.
- *Fax:* (202) 493–2251.
- *Mail:* U.S. Department of Transportation, Docket Operations, M–30, West Building Ground Floor, Room W12–140, 1200 New Jersey Avenue SE., Washington, DC 20590.
- *Hand Delivery:* U.S. Department of Transportation, Docket Operations, M–30, West Building Ground Floor, Room W12–140, 1200 New Jersey Avenue SE., Washington, DC 20590, between 9 a.m. and 5 p.m., Monday through Friday, except Federal holidays.

For service information identified in this AD, contact Quest Aircraft Design, LLC, 1200 Turbine Drive, Sandpoint, Idaho 83864; *phone:* (208) 263–1111; fax: (208) 263–1511; *email: http://questaircraft.com/quest/contact-quest/customer-service/; Internet: http://questaircraft.com/.* You may review copies of the referenced service information at the FAA, Small Airplane Directorate, 901 Locust, Kansas City, Missouri 64106. For information on the availability of this material at the FAA, call (816) 329–4148.

Examining the AD Docket

You may examine the AD docket on the Internet at *http://www.regulations.gov;* or in person at the Docket Management Facility between 9 a.m. and 5 p.m., Monday through Friday, except Federal holidays. The AD docket contains this AD, the regulatory evaluation, any comments received, and other information. The street address for the Docket Office (*phone:* (800) 647–5527) is in the **ADDRESSES** section. Comments will be available in the AD docket shortly after receipt.

FOR FURTHER INFORMATION CONTACT: Tung Tran, Aerospace Engineer, Seattle Aircraft Certification Office, FAA, 1601 Lind Avenue SW, Renton, Washington 98057; *phone:* (425) 917–6505; *fax:* (425) 917–6590; *email: tung.tran@faa.gov.*

SUPPLEMENTARY INFORMATION:

Discussion

We received reports of five instances where a loose IPS bolt was found on the right-hand side of the engine bypass door attachment on Quest Model Kodiak 100 airplanes. This area attaches the bypass door to the actuating shaft. In one of the five instances, the bolt was lost. Loose or missing IPS bolts could lead to an inoperable bypass door, which could result in engine inlet icing with consequent loss of engine power and forced landing.

Relevant Service Information

We reviewed Quest Aircraft Company Mandatory Service Bulletin Number SB11–17, Revision: 00, dated November 1, 2011; and Quest Aircraft Company Field Service Instruction No. FSI–028, Revision 02, (undated). The service information describes procedures for inspecting and re-torquing the first IPS bolt, replacing both IPS bolts with new bolts, and installing safety wire around the new bolts.

FAA's Determination

We are issuing this AD because we evaluated all the relevant information and determined the unsafe condition described previously is likely to exist or develop in other products of the same type design.

AD Requirements

This AD requires accomplishing the actions specified in the service information described previously.

FAA's Justification and Determination of the Effective Date

An unsafe condition exists that requires the immediate adoption of this AD. The FAA has found that the risk to the flying public justifies waiving notice and comment prior to adoption of this rule because this condition, if not corrected, could result in loss of engine power that may lead to a forced landing. Therefore, we find that notice and opportunity for prior public comment are impracticable and that good cause exists for making this amendment effective in less than 30 days.

Comments Invited

This AD is a final rule that involves requirements affecting flight safety and was not preceded by notice and an opportunity for public comment. However, we invite you to send any written data, views, or arguments about this AD. Send your comments to an address listed under the **ADDRESSES** section. Include the docket number FAA–2011–1328 and Directorate Identifier 2011–CE–037–AD at the beginning of your comments. We specifically invite comments on the overall regulatory, economic, environmental, and energy aspects of this AD. We will consider all comments received by the closing date and may amend this AD because of those comments.

We will post all comments we receive, without change, to *http://www.regulations.gov*, including any personal information you provide. We will also post a report summarizing each substantive verbal contact we receive about this AD.

Costs of Compliance

We estimate that this AD affects 38 airplanes of U.S. registry.

We estimate the following costs to comply with this AD:

ESTIMATED COSTS

Action	Labor cost	Parts cost	Cost per product	Cost on U.S. operators
Inspect and re-torque the AN4–4A bolt	0.5 work-hour × $85 per hour = $42.50.	(*)	$42.50	$1,615

ESTIMATED COSTS—Continued

Action	Labor cost	Parts cost	Cost per product	Cost on U.S. operators
Replace the IPS bolts, part numbers (P/N) AN4–4A and AN4–5A, with new IPS bolts, P/N AN4H4A and AN4H5A, respectively. Install safety wire around the new bolts.	1 work-hour × $85 per hour = $85.	86	$171	$6,498

* Not Applicable.

According to the manufacturer, some of the costs of this AD may be covered under warranty, thereby reducing the cost impact on affected individuals. We do not control warranty coverage for affected individuals. As a result, we have included all costs in our cost estimate.

Authority for This Rulemaking

Title 49 of the United States Code specifies the FAA's authority to issue rules on aviation safety. Subtitle I, section 106, describes the authority of the FAA Administrator. ''Subtitle VII: Aviation Programs'' describes in more detail the scope of the Agency's authority.

We are issuing this rulemaking under the authority described in Subtitle VII, Part A, Subpart III, Section 44701: ''General requirements.'' Under that section, Congress charges the FAA with promoting safe flight of civil aircraft in air commerce by prescribing regulations for practices, methods, and procedures the Administrator finds necessary for safety in air commerce. This regulation is within the scope of that authority because it addresses an unsafe condition that is likely to exist or develop on products identified in this rulemaking action.

Regulatory Findings

This AD will not have federalism implications under Executive Order 13132. This AD will not have a substantial direct effect on the States, on the relationship between the national government and the States, or on the distribution of power and responsibilities among the various levels of government.

For the reasons discussed above, I certify that this AD:

(1) Is not a ''significant regulatory action'' under Executive Order 12866,

(2) Is not a ''significant rule'' under DOT Regulatory Policies and Procedures (44 FR 11034, February 26, 1979),

(3) Will not affect intrastate aviation in Alaska, and

(4) Will not have a significant economic impact, positive or negative, on a substantial number of small entities under the criteria of the Regulatory Flexibility Act.

List of Subjects in 14 CFR Part 39

Air transportation, Aircraft, Aviation safety, Incorporation by reference, Safety.

Adoption of the Amendment

Accordingly, under the authority delegated to me by the Administrator, the FAA amends 14 CFR part 39 as follows:

PART 39—AIRWORTHINESS DIRECTIVES

■ 1. The authority citation for part 39 continues to read as follows:

Authority: 49 U.S.C. 106(g), 40113, 44701.

§ 39.13 [Amended]

■ 2. The FAA amends § 39.13 by adding the following new airworthiness directive (AD):

2011–25–04 Quest Aircraft Design, LLC: Amendment 39–16880; Docket No. FAA–2011–1328; Directorate Identifier 2011–CE–037–AD.

(a) Effective Date

This AD is effective December 19, 2011.

(b) Affected ADs

None.

(c) Applicability

This AD applies to Quest Aircraft Design, LLC Model Kodiak 100 airplanes, serial numbers 100–0001 through 100–0056, certificated in any category.

(d) Subject

Joint Aircraft System Component (JASC)/ Air Transport Association (ATA) of America Code 7160, Engine Air Intake System.

(e) Unsafe Condition

This AD was prompted by reports of five instances where a loose IPS bolt was found on the right-hand side of the engine bypass door attachment. This condition, if not corrected, could lead to an inoperable bypass door, which could result in engine inlet icing with consequent loss of engine power and forced landing. We are issuing this AD to correct the unsafe condition on these products.

(f) Compliance

Comply with this AD within the compliance times specified, unless already done.

(g) Torque of the IPS AN4–4A Bolt

Before further flight on or after December 19, 2011 (the effective date of this AD), inspect the torque of the IPS bolt, part number (P/N) AN4–4A, and re-torque, if necessary, following Quest Aircraft Company Field Service Instruction No. FSI–028, Revision 02, (undated) as specified in Mandatory Service Bulletin No. SB11–17, Revision: 00, dated November 1, 2011.

(h) Replace the IPS AN4–4A and AN4–5A Bolts

Within 15 hours time-in-service (TIS) after December 19, 2011 (the effective date of this AD), replace the IPS bolts, P/N AN4–4A and P/N AN4–5A, with new IPS bolts, P/N AN4H4A and P/N AN4H5A, respectively. After installing the new bolts, install safety wire around the new bolts. Do the actions following Quest Aircraft Company Field Service Instruction No. FSI–028, Revision 02, (undated) as specified in Mandatory Service Bulletin No. SB11–17, Revision: 00, dated November 1, 2011.

(i) Prohibition of Installation of IPS AN4–4A and AN4–5A Bolts

As of December 19, 2011 (the effective date of this AD), do not install any IPS bolts, P/N AN4–4A or P/N AN4–5A.

(j) Special Flight Permit

Special flight permits are permitted with the following limitation: Flight into known icing is prohibited.

(k) Alternative Methods of Compliance (AMOCs)

(1) The Manager, Seattle Aircraft Certification Office (ACO), FAA, has the authority to approve AMOCs for this AD, if requested using the procedures found in 14 CFR 39.19. In accordance with 14 CFR 39.19, send your request to your principal inspector or local Flight Standards District Office, as appropriate. If sending information directly to the manager of the ACO, send it to the attention of the person identified in the Related Information section of this AD.

(2) Before using any approved AMOC, notify your appropriate principal inspector, or lacking a principal inspector, the manager of the local flight standards district office/ certificate holding district office.

(l) Related Information

For more information about this AD, contact Tung Tran, Aerospace Engineer, Seattle ACO, FAA, 1601 Lind Avenue SW., Renton, Washington 98057; *phone:* (425) 917–6505; *fax:* (425) 917–6590; *email: tung.tran@faa.gov.*

(m) Material Incorporated by Reference

(1) You must use the following service information to do the actions required by this AD, unless the AD specifies otherwise. The Director of the Federal Register approved the incorporation by reference (IBR) under 5 U.S.C. 552(a) and 1 CFR part 51 on December 19, 2011.

(i) Quest Aircraft Company Mandatory Service Bulletin No. SB11–17, Revision: 00, dated November 1, 2011; and

(ii) Quest Aircraft Company Field Service Instruction No. FSI–028, Revision 02, (undated).

(2) For service information identified in this AD, contact Quest Aircraft Design, LLC, 1200 Turbine Drive, Sandpoint, Idaho 83864; *phone:* (208) 263–1111; *fax:* (208) 263–1511; *email: http://questaircraft.com/quest/contact-quest/customer-service/; Internet: http://questaircraft.com/.*

(3) You may review copies of the service information at the FAA, Small Airplane Directorate, 901 Locust, Kansas City, Missouri 64106. For information on the availability of this material at the FAA, call (816) 329–4148.

(4) You may also review copies of the service information that is incorporated by reference at the National Archives and Records Administration (NARA). For information on the availability of this material at an NARA facility, call (202) 741–6030, or go to *http://www.archives.gov/federal_register/code_of_federal_regulations/ibr_locations.html.*

Issued in Kansas City, Missouri, on November 25, 2011.

John Colomy,

Acting Manager, Small Airplane Directorate, Aircraft Certification Service.

[FR Doc. 2011–30881 Filed 12–1–11; 8:45 am]

BILLING CODE 4910–13–P

DEPARTMENT OF TRANSPORTATION

Federal Aviation Administration

14 CFR Part 71

[Docket No. FAA–2011–0748; Airspace Docket No. 11–ACE–13]

Amendment of Class E Airspace; Olathe, KS

AGENCY: Federal Aviation Administration (FAA), DOT.

ACTION: Final rule.

SUMMARY: This action removes Class E airspace designated as an extension to Class D, and amends Class E airspace for Olathe, KS. Decommissioning of the Johnson County VHF Omnidirectional Range/Distance Measuring Equipment (VOR/DME) at Johnson County Executive Airport, Olathe, KS, has made this action necessary to enhance the safety and management of Instrument Flight Rule (IFR) operations at the airport.

DATES: *Effective date:* 0901 UTC, February 9, 2012. The Director of the Federal Register approves this incorporation by reference action under 1 CFR Part 51, subject to the annual revision of FAA Order 7400.9 and publication of conforming amendments.

FOR FURTHER INFORMATION CONTACT: Scott Enander, Central Service Center, Operations Support Group, Federal Aviation Administration, Southwest Region, 2601 Meacham Blvd., Fort Worth, TX 76137; telephone (817) 321–7716.

SUPPLEMENTARY INFORMATION:

History

On August 26, 2011, the FAA published in the **Federal Register** a notice of proposed rulemaking to amend Class E airspace for Olathe, KS, reconfiguring controlled airspace at Johnson County Executive Airport (76 FR 53361) Docket No. FAA–2011–0748. Interested parties were invited to participate in this rulemaking effort by submitting written comments on the proposal to the FAA. No comments were received. Class E airspace designations are published in paragraph 6005 of FAA Order 7400.9V dated August 9, 2011, and effective September 15, 2011, which is incorporated by reference in 14 CFR Part 71.1. The Class E airspace designations listed in this document will be published subsequently in the Order.

The Rule

This action amends Title 14 Code of Federal Regulations (14 CFR) Part 71 by removing Class E airspace designated as an extension to a Class D or Class E surface area, and modifying Class E airspace extending upward from 700 feet above the surface, for standard instrument approach procedures at Johnson County Executive Airport, Olathe, KS. Decommissioning of the Johnson County VOR/DME and cancellation of the VOR approach at Johnson County Executive Airport has made reconfiguration of the airspace necessary for the safety and management of IFR operations at the airport.

The FAA has determined that this regulation only involves an established body of technical regulations for which frequent and routine amendments are necessary to keep them operationally current. Therefore, this regulation: (1) Is not a ''significant regulatory action'' under Executive Order 12866; (2) is not a ''significant rule'' under DOT Regulatory Policies and Procedures (44 FR 11034; February 26, 1979); and (3) does not warrant preparation of a regulatory evaluation as the anticipated impact is so minimal. Since this is a routine matter that will only affect air traffic procedures and air navigation, it is certified that this rule, when promulgated, will not have a significant economic impact on a substantial number of small entities under the criteria of the Regulatory Flexibility Act.

The FAA's authority to issue rules regarding aviation safety is found in Title 49 of the U.S. Code. Subtitle 1, Section 106, describes the authority of the FAA Administrator. Subtitle VII, Aviation Programs, describes in more detail the scope of the agency's authority. This rulemaking is promulgated under the authority described in Subtitle VII, Part A, Subpart I, Section 40103. Under that section, the FAA is charged with prescribing regulations to assign the use of airspace necessary to ensure the safety of aircraft and the efficient use of airspace. This regulation is within the scope of that authority as it amends controlled airspace at Johnson County Executive Airport, Olathe, KS.

List of Subjects in 14 CFR Part 71

Airspace, Incorporation by reference, Navigation (air).

Adoption of the Amendment

In consideration of the foregoing, the Federal Aviation Administration amends 14 CFR Part 71 as follows:

PART 71—DESIGNATION OF CLASS A, B, C, D, AND E AIRSPACE AREAS; AIR TRAFFIC SERVICE ROUTES; AND REPORTING POINTS

■ 1. The authority citation for 14 CFR Part 71 continues to read as follows:

Authority: 49 U.S.C. 106(g), 40103, 40113, 40120; E.O. 10854, 24 FR 9565, 3 CFR, 1959–1963 Comp., p. 389.

§ 71.1 [Amended]

■ 2. The incorporation by reference in 14 CFR 71.1 of the Federal Aviation Administration Order 7400.9V, Airspace Designations and Reporting Points, dated August 9, 2011, and effective September 15, 2011 is amended as follows:

* * * * *

Paragraph 6004 Class E airspace areas designated as an extension to a Class D or Class E surface area.

* * * * *

ACE KS E4 Olathe, Johnson County Executive Airport, KS [Removed]

Paragraph 6005 Class E Airspace areas extending upward from 700 feet or more above the surface of the earth.

* * * * *

ACE KS E5 Olathe, Johnson County Executive Airport, KS [Amended]

Olathe, Johnson County Executive Airport, KS.
(Lat. 38°50′51″ N., long. 94°44′15″ W.)

That airspace extending upward from 700 feet above the surface within a 6.4-mile radius of Johnson County Executive Airport.

Issued in Fort Worth, Texas, on November 9, 2011.

Gail L. Kasson,

Acting Manager, Operations Support Group, ATO Central Service Center.

[FR Doc. 2011–30530 Filed 12–1–11; 8:45 am]

BILLING CODE 4910–13–P

DEPARTMENT OF TRANSPORTATION

Federal Aviation Administration

14 CFR Part 71

[Docket No. FAA–2011–0894; Airspace Docket No. 11–AWP–14]

Amendment of Class E Airspace; Mercury, NV

AGENCY: Federal Aviation Administration (FAA), DOT.

ACTION: Final rule.

SUMMARY: This action amends Class E airspace at Mercury, Desert Rock Airport, Mercury, NV. Decommissioning of the Mercury Non-Directional Beacon (NDB) at Mercury, Desert Rock Airport has made this action necessary for the safety and management of Instrument Flight Rules (IFR) operations at the airport. This action also makes a minor adjustment to the geographic coordinates in the regulatory text.

DATES: Effective date, 0901 UTC, February 9, 2012. The Director of the Federal Register approves this incorporation by reference action under 1 CFR part 51, subject to the annual revision of FAA Order 7400.9 and publication of conforming amendments.

FOR FURTHER INFORMATION CONTACT: Eldon Taylor, Federal Aviation Administration, Operations Support Group, Western Service Center, 1601 Lind Avenue SW., Renton, WA 98057; telephone (425) 203–4537.

SUPPLEMENTARY INFORMATION:

History

On September 12, 2011, the FAA published in the Federal Register a notice of proposed rulemaking to amend controlled airspace at Mercury, NV (76 FR 56127). Interested parties were invited to participate in this rulemaking effort by submitting written comments on the proposal to the FAA. No comments were received. Subsequent to publication, the FAA's Aeronautical Products office made further adjustments to the geographic coordinates listed in the regulatory text, and is included in this rulemaking.

Class E airspace designations are published in paragraph 6005, of FAA Order 7400.9V dated August 9, 2011, and effective September 15, 2011, which is incorporated by reference in 14 CFR 71.1. The Class E airspace designations listed in this document will be published subsequently in that Order.

The Rule

This action amends Title 14 Code of Federal Regulations (14 CFR) part 71 by amending Class E airspace extending upward from 700 feet above the surface, at Mercury, Desert Rock Airport, to accommodate IFR aircraft approach procedures. The Mercury NDB has been decommissioned the NDB approach cancelled. Also, the second boundary coordinate listed in the regulatory text is adjusted to be in concert with the FAA's aeronautical database. This action is necessary for the safety and management of IFR operations. With the exception of editorial changes and the changes noted above, this rule is the same as that proposed in the NPRM.

The FAA has determined this regulation only involves an established body of technical regulations for which frequent and routine amendments are necessary to keep them operationally current. Therefore, this regulation: (1) Is not a ''significant regulatory action'' under Executive Order 12866; (2) is not a ''significant rule'' under DOT Regulatory Policies and Procedures (44 FR 11034; February 26, 1979); and (3) does not warrant preparation of a regulatory evaluation as the anticipated impact is so minimal. Since this is a routine matter that will only affect air traffic procedures and air navigation, it is certified this rule, when promulgated, will not have a significant economic impact on a substantial number of small entities under the criteria of the Regulatory Flexibility Act. The FAA's authority to issue rules regarding aviation safety is found in Title 49 of the U.S. Code. Subtitle 1, Section 106 discusses the authority of the FAA Administrator. Subtitle VII, Aviation Programs, describes in more detail the scope of the agency's authority. This rulemaking is promulgated under the authority described in subtitle VII, part A, subpart I, section 40103. Under that section, the FAA is charged with prescribing regulations to assign the use of airspace necessary to ensure the safety of aircraft and the efficient use of airspace. This regulation is within the scope of that authority as it amends controlled airspace at Mercury, Desert Rock Airport, Mercury, NV.

List of Subjects in 14 CFR Part 71

Airspace, Incorporation by reference, Navigation (air).

Adoption of the Amendment

In consideration of the foregoing, the Federal Aviation Administration amends 14 CFR part 71 as follows:

PART 71—DESIGNATION OF CLASS A, B, C, D AND E AIRSPACE AREAS; AIR TRAFFIC SERVICE ROUTES; AND REPORTING POINTS

■ 1. The authority citation for 14 CFR part 71 continues to read as follows:

Authority: 49 U.S.C. 106(g), 40103, 40113, 40120; E.O. 10854, 24 FR 9565, 3 CFR, 1959–1963 Comp., p. 389.

§ 71.1 [Amended]

■ 2. The incorporation by reference in 14 CFR part 71.1 of the Federal Aviation Administration Order 7400.9V, Airspace Designations and Reporting Points, dated August 9, 2011, and effective September 15, 2011 is amended as follows:

Paragraph 6005 Class E airspace areas extending upward from 700 feet or more above the surface of the earth.

* * * * *

AWP NV E5 Mercury, NV [Amended]

Mercury, Desert Rock Airport, NV
(Lat. 36°37′10″ N., long. 116°01′58″ W.)

That airspace extending upward from 700 feet above the surface within a 4.3-mile radius of the Mercury, Desert Rock Airport. That airspace extending upward from 1,200 feet above the surface within the area bounded by a line beginning at lat. 36°41′00″ N., long. 116°26′33″ W.; to lat. 36°41′00″ N., long. 115°56′03″ W.; to lat. 36°16′00″ N., long. 115°56′03″ W.; to lat. 36°16′00″ N., long. 116°08′03″ W.; to lat. 36°36′00″ N., long. 116°26′33″ W.; thence to the point of beginning, excluding the portion within Restricted Area R–4808N.

Issued in Seattle, Washington, on November 21, 2011.

Robert Henry,

Acting Manager, Operations Support Group, Western Service Center.

[FR Doc. 2011–30884 Filed 12–1–11; 8:45 am]

BILLING CODE 4910–13–M

DEPARTMENT OF TRANSPORTATION

Federal Aviation Administration

14 CFR Part 71

[Docket No. FAA–2011–0830; Airspace Docket No. 11–ACE–16]

Amendment of Class E Airspace; Centerville, IA

AGENCY: Federal Aviation Administration (FAA), DOT.

ACTION: Final rule.

SUMMARY: This action amends Class E airspace for Centerville, IA. Decommissioning of the Centerville non-directional beacon (NDB) and cancellation of the NDB approach, at Centerville Municipal Airport, as well as the addition of a new COPTER area navigation (RNAV) SIAP at Mercy Medical Center-Centerville Heliport, has made this action necessary to enhance the safety and management of Instrument Flight Rule (IFR) operations within the National Airspace System. The geographic coordinates of Centerville Municipal Airport are being updated also.

DATES: Effective date: 0901 UTC, February 9, 2012. The Director of the Federal Register approves this incorporation by reference action under 1 CFR Part 51, subject to the annual revision of FAA Order 7400.9 and publication of conforming amendments.

FOR FURTHER INFORMATION CONTACT: Scott Enander, Central Service Center, Operations Support Group, Federal Aviation Administration, Southwest Region, 2601 Meacham Blvd., Fort Worth, TX 76137; telephone (817) 321–7716.

SUPPLEMENTARY INFORMATION:

History

On August 26, 2011, the FAA published in the **Federal Register** a notice of proposed rulemaking to amend Class E airspace for the Centerville, IA, area. (76 FR 53358) Docket No. FAA–2011–0830. Interested parties were invited to participate in this rulemaking effort by submitting written comments on the proposal to the FAA. No comments were received. Class E airspace designations are published in paragraph 6005 of FAA Order 7400.9V dated August 9, 2011, and effective September 15, 2011, which is incorporated by reference in 14 CFR 71.1. The Class E airspace designations listed in this document will be published subsequently in the Order.

The Rule

This action amends Title 14 Code of Federal Regulations (14 CFR) Part 71 by amending Class E airspace extending upward from 700 feet above the surface for the Centerville, IA area. Decommissioning of the Centerville NDB and cancellation of the NDB approach at Centerville Municipal Airport, as well as the creation of a new COPTER (RNAV) standard instrument approach procedure at Mercy Medical Center-Centerville Heliport, has made reconfiguration of the airspace necessary for the safety and management of IFR operations in the area. Also, the geographic coordinates of the airport are being updated to coincide with the FAA's aeronautical database.

The FAA has determined that this regulation only involves an established body of technical regulations for which frequent and routine amendments are necessary to keep them operationally current. Therefore, this regulation: (1) Is not a ''significant regulatory action'' under Executive Order 12866; (2) is not a ''significant rule'' under DOT Regulatory Policies and Procedures (44 FR 11034; February 26, 1979); and (3) does not warrant preparation of a regulatory evaluation as the anticipated impact is so minimal. Since this is a routine matter that will only affect air traffic procedures and air navigation, it is certified that this rule, when promulgated, will not have a significant economic impact on a substantial number of small entities under the criteria of the Regulatory Flexibility Act.

The FAA's authority to issue rules regarding aviation safety is found in Title 49 of the U.S. Code. Subtitle 1, Section 106, describes the authority of the FAA Administrator. Subtitle VII, Aviation Programs, describes in more detail the scope of the agency's authority. This rulemaking is promulgated under the authority described in Subtitle VII, Part A, Subpart I, Section 40103. Under that section, the FAA is charged with prescribing regulations to assign the use of airspace necessary to ensure the safety of aircraft and the efficient use of airspace. This regulation is within the scope of that authority as it amends controlled airspace in the Centerville, IA area.

List of Subjects in 14 CFR Part 71

Airspace, Incorporation by reference, Navigation (air).

Adoption of the Amendment

In consideration of the foregoing, the Federal Aviation Administration amends 14 CFR part 71 as follows:

PART 71—DESIGNATION OF CLASS A, B, C, D, AND E AIRSPACE AREAS; AIR TRAFFIC SERVICE ROUTES; AND REPORTING POINTS

■ 1. The authority citation for 14 CFR Part 71 continues to read as follows:

Authority: 49 U.S.C. 106(g), 40103, 40113, 40120; E.O. 10854, 24 FR 9565, 3 CFR, 1959–1963 Comp., p. 389.

§ 71.1 [Amended]

■ 2. The incorporation by reference in 14 CFR 71.1 of the Federal Aviation Administration Order 7400.9V, Airspace Designations and Reporting Points, dated August 9, 2011, and effective September 15, 2011 is amended as follows:

Paragraph 6005 Class E airspace areas extending upward from 700 feet or more above the surface of the earth.

* * * * *

ACE IA E5 Centerville, IA [Amended]

Centerville Municipal Airport, IA
(Lat. 40°41′4″ N., long. 92°54′04″ W.)
Mercy Medical Center-Centerville Heliport, IA
(Lat. 40°45′23″ N., long. 92°51′25″ W.)

That airspace extending upward from 700 feet above the surface within a 6.5-mile radius of Centerville Municipal Airport, and within a 6.5-mile radius of Mercy Medical Center-Centerville Heliport.

Issued in Fort Worth, Texas, on November 9, 2011.

Gail L. Kasson,

Acting Manager, Operations Support Group, ATO Central Service Center.

[FR Doc. 2011–30527 Filed 12–1–11; 8:45 am]

BILLING CODE 4910–13–P

DEPARTMENT OF TRANSPORTATION

Federal Aviation Administration

14 CFR Part 71

[Docket No. FAA–2011–0880; Airspace Docket No. 11–AAL–17]

Amendment of Class E Airspace; Emmonak, AK

AGENCY: Federal Aviation Administration (FAA), DOT.

ACTION: Final rule.

SUMMARY: This action modifies Class E airspace at Emmonak, AK. The revision of two standard instrument approach procedures at the Emmonak Airport has made this action necessary to enhance safety and management of Instrument Flight Rules (IFR) operations.

DATES: Effective date, 0901 UTC, February 9, 2012. The Director of the Federal Register approves this

incorporation by reference action under 1 CFR part 51, subject to the annual revision of FAA Order 7400.9 and publication of conforming amendments.

FOR FURTHER INFORMATION CONTACT: Jeanette Roller, Federal Aviation Administration, Operations Support Group, Western Service Center, 1601 Lind Avenue SW., Renton, WA 98057; telephone (425) 203–4541.

SUPPLEMENTARY INFORMATION:

History

On August 31, 2011, the FAA published in the **Federal Register** a notice of proposed rulemaking (NPRM) to amend controlled airspace at Emmonak, AK (76 FR 54148). Interested parties were invited to participate in this rulemaking effort by submitting written comments on the proposal to the FAA. No comments were received.

Class E airspace designations are published in paragraph 6005 of FAA Order 7400.9V dated August 9, 2011, and effective September 15, 2011, which is incorporated by reference in 14 CFR Part 71.1. The Class E airspace designations listed in this document will be published subsequently in that Order. Except for editorial changes, this rule is the same as published in the NPRM.

The Rule

This action amends Title 14 Code of Federal Regulations (14 CFR) Part 71 by modifying Class E airspace extending upward from 700 feet above the surface, at Emmonak, Airport, to accommodate IFR aircraft executing the two revised standard instrument approach procedures at the airport. This action is necessary for the safety and management of IFR operations. The portion of the airspace that lies further than 12 miles offshore and overlaps Norton Sound Low will be amended in a future rulemaking.

The FAA has determined this regulation only involves an established body of technical regulations for which frequent and routine amendments are necessary to keep them operationally current. Therefore, this regulation: (1) Is not a ''significant regulatory action'' under Executive Order 12866; (2) is not a ''significant rule'' under DOT Regulatory Policies and Procedures (44 FR 11034; February 26, 1979); and (3) does not warrant preparation of a regulatory evaluation as the anticipated impact is so minimal. Since this is a routine matter that will only affect air traffic procedures and air navigation, it is certified this rule, when promulgated, will not have a significant economic impact on a substantial number of small entities under the criteria of the Regulatory Flexibility Act. The FAA's authority to issue rules regarding aviation safety is found in Title 49 of the U.S. Code. Subtitle 1, Section 106 discusses the authority of the FAA Administrator. Subtitle VII, Aviation Programs, describes in more detail the scope of the agency's authority. This rulemaking is promulgated under the authority described in Subtitle VII, Part A, Subpart I, Section 40103. Under that section, the FAA is charged with prescribing regulations to assign the use of airspace necessary to ensure the safety of aircraft and the efficient use of airspace. This regulation is within the scope of that authority as it modifies controlled airspace at Emmonak, Airport, Emmonak, AK.

List of Subjects in 14 CFR Part 71

Airspace, Incorporation by reference, Navigation (air).

Adoption of the Amendment

In consideration of the foregoing, the Federal Aviation Administration amends 14 CFR part 71 as follows:

PART 71—DESIGNATION OF CLASS A, B, C, D AND E AIRSPACE AREAS; AIR TRAFFIC SERVICE ROUTES; AND REPORTING POINTS

■ 1. The authority citation for 14 CFR part 71 continues to read as follows:

Authority: 49 U.S.C. 106(g), 40103, 40113, 40120; E.O. 10854, 24 FR 9565, 3 CFR, 1959–1963 Comp., p. 389.

§ 71.1 [Amended]

■ 2. The incorporation by reference in 14 CFR 71.1 of the Federal Aviation Administration Order 7400.9V, Airspace Designations and Reporting Points, dated August 9, 2011, and effective September 15, 2011 is amended as follows:

Paragraph 6005 Class E airspace areas extending upward from 700 feet or more above the surface of the earth.

* * * * *

AAL AK E5 Emmonak, AK [Modified]

Emmonak Airport, AK
(Lat. 62°47′10″ N., long. 164°29′27″ W.)
Emmonak VOR/DME
(Lat. 62°47′05″ N., long. 164°29′15″ W.)

That airspace extending upward from 700 feet above the surface within a 6.5-mile radius of the Emmonak Airport, and within 4 miles east and 8 miles west of the Emmonak VOR/DME 353° radial extending from the VOR/DME to 16 miles north, and within 4 miles east and 8 miles west of the Emmonak VOR/DME 182° radial extending from the VOR/DME to 16 miles south, and that airspace extending upward from 1,200 feet above the surface within a 73-mile radius of the Emmonak Airport, excluding that area outside 12 miles from the shoreline that overlies Norton Sound Low.

Issued in Seattle, Washington, on November 22, 2011.

Robert Henry,

Acting Manager, Operations Support Group, Western Service Center.

[FR Doc. 2011–30893 Filed 12–1–11; 8:45 am]

BILLING CODE 4910–13–P

DEPARTMENT OF TRANSPORTATION

Federal Aviation Administration

14 CFR Part 71

[Docket No. FAA–2011–0455; Airspace Docket No. 11–AEA–4]

Establishment of Class D and E Airspace; Frederick, MD

AGENCY: Federal Aviation Administration (FAA), DOT.

ACTION: Final rule.

SUMMARY: This action establishes Class D and E airspace at Frederick, MD, to accommodate new Area Navigation (RNAV) Global Positioning System (GPS) Standard Instrument Approach Procedures (SIAPs) at Frederick Municipal Airport. This action enhances the safety and management of Instrument Flight Rules (IFR) operations for SIAPs at the airport.

DATES: Effective 0901 UTC, February 9, 2012. The Director of the Federal Register approves this incorporation by reference action under title 1, Code of Federal Regulations, part 51, subject to the annual revision of FAA Order 7400.9 and publication of conforming amendments

FOR FURTHER INFORMATION CONTACT: Rich Horrocks, Operations Support Group, Eastern Service Center, Federal Aviation Administration, P.O. Box 20636, Atlanta, Georgia 30320; telephone (404) 305–5588.

SUPPLEMENTARY INFORMATION:

History

On August 12, 2011, the FAA published in the **Federal Register** a notice of proposed rulemaking (NPRM) to establish Class D and E airspace for the new Frederick Municipal Airport, Frederick, MD (76 FR 50156) Docket No. FAA–2011–0455. Interested parties were invited to participate in this rulemaking effort by submitting written comments on the proposal to the FAA. No comments were received. Class D and E airspace designations are published in Paragraphs 5000, 6002 and 6004, respectively, of FAA Order

7400.9V dated August 9, 2011, and effective September 15, 2011, which is incorporated by reference in 14 CFR 71.1. The Class D and E airspace designations listed in this document will be published subsequently in the Order.

The Rule

This amendment to Title 14, Code of Federal Regulations (14 CFR) part 71 establishes Class D airspace extending upward from the surface to 2,800 feet MSL within a 5-mile radius of Frederick Municipal Airport. Class E surface area airspace, within a 5-mile radius of the airport and Class E airspace designated as an extension to Class D surface area. Controlled airspace is necessary for the new RNAV GPS standard instrument approach procedures developed for the airport and for continued safety and management of IFR operations at Frederick Municipal Airport, Frederick, MD.

The FAA has determined that this regulation only involves an established body of technical regulations for which frequent and routine amendments are necessary to keep them operationally current, is non-controversial and unlikely to result in adverse or negative comments. It, therefore, (1) is not a ''significant regulatory action'' under Executive Order 12866; (2) is not a ''significant rule'' under DOT Regulatory Policies and Procedures (44 FR 11034; February 26, 1979); and (3) does not warrant preparation of a Regulatory Evaluation as the anticipated impact is so minimal. Since this is a routine matter that will only affect air traffic procedures and air navigation, it is certified that this rule, when promulgated, will not have a significant economic impact on a substantial number of small entities under the criteria of the Regulatory Flexibility Act.

The FAA's authority to issue rules regarding aviation safety is found in Title 49 of the United States Code. Subtitle I, Section 106 describes the authority of the FAA Administrator. Subtitle VII, Aviation Programs, describes in more detail the scope of the agency's authority.

This rulemaking is promulgated under the authority described in Subtitle VII, Part A, Subpart I, Section 40103. Under that section, the FAA is charged with prescribing regulations to assign the use of airspace necessary to ensure the safety of aircraft and the efficient use of airspace. This regulation is within the scope of that authority as it establishes controlled airspace at Frederick Municipal Airport, Frederick, MD.

List of Subjects in 14 CFR Part 71

Airspace, Incorporation by reference, Navigation (air).

Adoption of the Amendment

In consideration of the foregoing, the Federal Aviation Administration amends 14 CFR part 71 as follows:

PART 71—DESIGNATION OF CLASS A, B, C, D AND E AIRSPACE AREAS; AIR TRAFFIC SERVICE ROUTES; AND REPORTING POINTS

■ 1. The authority citation for part 71 continues to read as follows:

Authority: 49 U.S.C. 106(g); 40103, 40113, 40120; E.O. 10854, 24 FR 9565, 3 CFR, 1959–1963 Comp., p. 389.

§ 71.1 [Amended]

■ 2. The incorporation by reference in 14 CFR 71.1 of Federal Aviation Administration Order 7400.9V, Airspace Designations and Reporting Points, dated August 9, 2011, and effective September 15, 2011, is amended as follows:

Paragraph 5000 Class D airspace.

* * * * *

AEA MD D Frederick, MD [NEW]

Frederick Municipal Airport, MD
(Lat. 39°25′03″ N., long. 77°22′28″ W.)

That airspace extending from the surface up to and including 2,800 feet MSL within a 5-mile radius of Frederick Municipal Airport. This Class D airspace area is effective during specific dates and times established in advance by a Notice to Airmen. The effective date and time will thereafter be continuously published in the Airport/Facility Directory.

Paragraph 6002 Class E airspace designated as surface areas.

* * * * *

AEA MD E2 Frederick, MD [NEW]

Frederick Municipal Airport, MD
(Lat. 39°25′03″ N., long. 77°22′28″ W.)

That airspace extending from the surface up to and including 2,800 feet MSL within a 5-mile radius of the Frederick Municipal Airport. This Class E airspace area is effective during specific dates and times established in advance by a Notice to Airmen. The effective date and time will thereafter be continuously published in the Airport/Facility Directory.

Paragraph 6004 Class E airspace designated as an extension to a Class D surface area.

* * * * *

AEA MD E4 Frederick, MD [NEW]

Frederick Municipal Airport, MD
(Lat. 39°25′03″ N., long. 77°22′28″ W.)

That airspace extending from the surface within 3.2 miles either side of the 036° bearing from the airport extending from the 5-mile radius to 7.6 miles northeast of the airport. This Class E airspace area is effective during specific dates and times established in advance by a Notice to Airmen. The effective date and time will thereafter be continuously published in the Airport/Facility Directory.

Issued in College Park, Georgia, on November 21, 2011.

Mark D. Ward,

Manager, Operations Support Group, Eastern Service Center, Air Traffic Organization.

[FR Doc. 2011–30940 Filed 12–1–11; 8:45 am]

BILLING CODE 4910–13–P

DEPARTMENT OF TRANSPORTATION

Federal Aviation Administration

14 CFR Part 71

[Docket No. FAA–2011–0831; Airspace Docket No. 11–ACE–17]

Establishment of Class E Airspace; Stuart, IA

AGENCY: Federal Aviation Administration (FAA), DOT.

ACTION: Final rule.

SUMMARY: This action establishes Class E airspace for Stuart, IA, to accommodate new COPTER area navigation (RNAV) Standard Instrument Approach Procedures at the City of Stuart Helistop. The FAA is taking this action to enhance the safety and management of Instrument Flight Rule (IFR) operations at the heliport.

DATES: *Effective date:* 0901 UTC, February 9, 2012. The Director of the Federal Register approves this incorporation by reference action under 1 CFR Part 51, subject to the annual revision of FAA Order 7400.9 and publication of conforming amendments.

FOR FURTHER INFORMATION CONTACT: Scott Enander, Central Service Center, Operations Support Group, Federal Aviation Administration, Southwest Region, 2601 Meacham Blvd., Fort Worth, TX 76137; telephone (817) 321–7716.

SUPPLEMENTARY INFORMATION:

History

On August 26, 2011, the FAA published in the **Federal Register** a notice of proposed rulemaking to establish Class E airspace for Stuart, IA, creating controlled airspace at the City of Stuart Helistop (76 FR 53360) Docket No. FAA–2011–0831. Interested parties were invited to participate in this rulemaking effort by submitting written comments on the proposal to the FAA. No comments were received. Class E airspace designations are published in paragraph 6005 of FAA Order 7400.9V dated August 9, 2011, and effective September 15, 2011, which is

incorporated by reference in 14 CFR 71.1. The Class E airspace designations listed in this document will be published subsequently in the Order.

The Rule

This action amends Title 14 Code of Federal Regulations (14 CFR) part 71 by creating Class E airspace extending upward from 700 feet above the surface for new COPTER RNAV standard instrument approach procedures at the City of Stuart Helistop, Stuart, IA. This action is necessary for the safety and management of IFR operations at the heliport.

The FAA has determined that this regulation only involves an established body of technical regulations for which frequent and routine amendments are necessary to keep them operationally current. Therefore, this regulation: (1) Is not a ''significant regulatory action'' under Executive Order 12866; (2) is not a ''significant rule'' under DOT Regulatory Policies and Procedures (44 FR 11034; February 26, 1979); and (3) does not warrant preparation of a regulatory evaluation as the anticipated impact is so minimal. Since this is a routine matter that will only affect air traffic procedures and air navigation, it is certified that this rule, when promulgated, will not have a significant economic impact on a substantial number of small entities under the criteria of the Regulatory Flexibility Act.

The FAA's authority to issue rules regarding aviation safety is found in Title 49 of the U.S. Code. Subtitle 1, section 106, describes the authority of the FAA Administrator. Subtitle VII, Aviation Programs, describes in more detail the scope of the agency's authority. This rulemaking is promulgated under the authority described in subtitle VII, part A, subpart I, section 40103. Under that section, the FAA is charged with prescribing regulations to assign the use of airspace necessary to ensure the safety of aircraft and the efficient use of airspace. This regulation is within the scope of that authority as it establishes controlled airspace for the City of Stuart Helistop, Stuart, IA.

List of Subjects in 14 CFR Part 71

Airspace, Incorporation by reference, Navigation (air).

Adoption of the Amendment

In consideration of the foregoing, the Federal Aviation Administration amends 14 CFR part 71 as follows:

PART 71—DESIGNATION OF CLASS A, B, C, D, AND E AIRSPACE AREAS; AIR TRAFFIC SERVICE ROUTES; AND REPORTING POINTS

■ 1. The authority citation for 14 CFR part 71 continues to read as follows:

Authority: 49 U.S.C. 106(g), 40103, 40113, 40120; E.O. 10854, 24 FR 9565, 3 CFR, 1959–1963 Comp., p. 389.

§ 71.1 [Amended]

■ 2. The incorporation by reference in 14 CFR 71.1 of the Federal Aviation Administration Order 7400.9V, Airspace Designations and Reporting Points, dated August 9, 2011, and effective September 15, 2011, is amended as follows:

Paragraph 6005 Class E airspace areas extending upward from 700 feet or more above the surface of the earth.

* * * * *

ACE IA E5 Stuart, IA [New]

Stuart, City of Stuart Helistop, IA
(Lat. 41°29′49″ N., long. 94°19′39″ W.)

That airspace extending upward from 700 feet above the surface within a 6.5-mile radius of the City of Stuart Helistop.

Issued in Fort Worth, Texas, on November 9, 2011.

Gail L. Kasson,

Acting Manager, Operations Support Group, ATO Central Service Center.

[FR Doc. 2011–30529 Filed 12–1–11; 8:45 am]

BILLING CODE 4910–13–P

DEPARTMENT OF HOMELAND SECURITY

Coast Guard

33 CFR Part 165

[Docket No. USCG–2011–1045]

RIN 1625–AA00

Safety Zone; Container Crane Relocation, Cooper and Wando Rivers, Charleston, SC

AGENCY: Coast Guard, DHS.

ACTION: Temporary final rule.

SUMMARY: The Coast Guard is establishing a 100 yard temporary moving safety zone around a barge transporting two container cranes on the Cooper and Wando Rivers during their relocation from berth #3 at Columbus Street Terminal to berth #1 at Wando Welch Terminal in Charleston, South Carolina on Monday, December 5, 2011. The safety zone is necessary to protect the public from hazards associated with transporting the large cranes by barge. Persons and vessels are prohibited from entering, transiting through, anchoring in, or remaining within the safety zone unless authorized by the Captain of the Port Charleston or a designated representative.

DATES: This rule is effective from 9 a.m. until 2 p.m. on December 5, 2011, and will be enforced from 9 a.m. until 2 p.m. on December 5, 2011.

ADDRESSES: Documents indicated in this preamble as being available in the docket are part of docket USCG–2011–1045 and are available online by going to *http://www.regulations.gov,* inserting USCG–2011–1045 in the ''Keyword'' box, and then clicking ''Search.'' They are also available for inspection or copying at the Docket Management Facility (M–30), U.S. Department of Transportation, West Building Ground Floor, Room W12–140, 1200 New Jersey Avenue SE., Washington, DC 20590, between 9 a.m. and 5 p.m., Monday through Friday, except Federal holidays.

FOR FURTHER INFORMATION CONTACT: If you have questions on this temporary final rule, call or email Ensign John R. Santorum, Sector Charleston Office of Waterways Management, Coast Guard; telephone (843) 740–3184, email *John.R.Santorum@uscg.mil.* If you have questions on viewing the docket, call Renee V. Wright, Program Manager, Docket Operations, telephone (202) 366–9826.

SUPPLEMENTARY INFORMATION:

Regulatory Information

The Coast Guard is issuing this temporary final rule without prior notice and opportunity to comment pursuant to authority under section 4(a) of the Administrative Procedure Act (APA) (5 U.S.C. 553(b)). This provision authorizes an agency to issue a rule without prior notice and opportunity to comment when the agency for good cause finds that those procedures are ''impracticable, unnecessary, or contrary to the public interest.'' Under 5 U.S.C. 553(b)(B), the Coast Guard finds that good cause exists for not publishing a notice of proposed rulemaking (NPRM) with respect to this rule because the Coast Guard did not receive necessary information regarding the crane relocation until November 2, 2011. As a result, the Coast Guard did not have sufficient time to publish an NPRM and to receive public comments prior to the relocation. Any delay in the effective date of this rule would be contrary to the public interest because immediate action is needed to minimize potential danger to the public during the crane relocation.

For the same reason discussed above, under 5 U.S.C. 553(d)(3) the Coast

Guard finds that good cause exists for making this rule effective less than 30 days after publication in the **Federal Register**.

Basis and Purpose

The legal basis for the rule is the Coast Guard's authority to establish regulated navigation areas and other limited access areas: 33 U.S.C. 1231; 46 U.S.C. Chapter 701, 3306, 3703; 50 U.S.C. 191, 195; 33 CFR 1.05–1, 6.04–1, 6.04–6, 160.5; Pub. L. 107–295, 116 Stat. 2064; Department of Homeland Security Delegation No. 0170.1.

The purpose of the rule is to protect the public from hazards associated with transporting the large cranes by barge from berth #3 at Columbus Street Terminal to berth #1 at Wando Welch Terminal in Charleston, South Carolina.

Discussion of Rule

On Monday, December 5, 2011, two container cranes are scheduled to be transported, by barge, from berth #3 at Columbus Street Terminal to berth #1 at Wando Welch Terminal in Charleston, South Carolina. The barge is a 100 foot by 300 foot vessel. The barge will transit the Cooper and Wando Rivers. Because of the size of the two container cranes and the restricted maneuverability of the barge, a temporary moving safety zone is necessary to protect the public during relocation of the container cranes from Columbus Street Terminal to Wando Welch Terminal.

The temporary moving safety zone encompasses certain waters of the Cooper and Wando Rivers in Charleston, South Carolina. The safety zone will be enforced from 9 a.m. until 2 p.m. on December 5, 2011. Persons and vessels are prohibited from entering, transiting through, anchoring in, or remaining within the safety zone unless authorized by the Captain of the Port Charleston or a designated representative. Persons and vessels desiring to enter, transit through, anchor in, or remain within the safety zone may contact the Captain of the Port Charleston by telephone at (843) 740–7050, or a designated representative via VHF radio on channel 16, to request authorization. If authorization to enter, transit through, anchor in, or remain within the safety zone is granted by the Captain of the Port Charleston or a designated representative, all persons and vessels receiving such authorization must comply with the instructions of the Captain of the Port Charleston or a designated representative. The Coast Guard will provide notice of the safety zone, including the name of the vessel transporting the cranes, by Local Notice to Mariners and Broadcast Notice to Mariners. The Coast Guard will also provide notice of the safety zone by on-scene designated representatives.

Regulatory Analyses

We developed this rule after considering numerous statutes and executive orders related to rulemaking. Below we summarize our analyses based on 13 of these statutes or executive orders.

Regulatory Planning and Review

Executive Orders 13563, Improving Regulation and Regulatory Review, and 12866, Regulatory Planning and Review, direct agencies to assess the costs and benefits of available regulatory alternatives and, if regulation is necessary, to select regulatory approaches that maximize net benefits (including potential economic, environmental, public health and safety effects, distributive impacts, and equity). Executive Order 13563 emphasizes the importance of quantifying both costs and benefits, of reducing costs, of harmonizing rules, and of promoting flexibility. This rule has not been designated a significant regulatory action under section 3(f) of Executive Order 12866. Accordingly, the Office of Management and Budget has not reviewed this regulation under Executive Order 12866.

The economic impact of this rule is not significant for the following reasons: (1) The safety zone will be enforced for only five hours; (2) although persons and vessels will not be able to enter, transit through, anchor in, or remain within the safety zone without authorization from the Captain of the Port Charleston or a designated representative, they may operate in the surrounding area during the enforcement period; (3) persons and vessels may still enter, transit through, anchor in, or remain within the safety zone if authorized by the Captain of the Port Charleston or a designated representative; and (4) the Coast Guard will provide advance notification of the safety zone to the local maritime community by Local Notice to Mariners and Broadcast Notice to Mariners.

Small Entities

Under the Regulatory Flexibility Act (5 U.S.C. 601–612), we have considered whether this rule would have a significant economic impact on a substantial number of small entities. The term ''small entities'' comprises small businesses, not-for-profit organizations that are independently owned and operated and are not dominant in their fields, and governmental jurisdictions with populations of less than 50,000.

The Coast Guard certifies under 5 U.S.C. 605(b) that this rule will not have a significant economic impact on a substantial number of small entities. This rule may affect the following entities, some of which may be small entities: The owners or operators of vessels intending to enter, transit through, anchor in, or remain within that portion of the Cooper and Wando Rivers encompassed within the temporary moving safety zone from 9 a.m. until 2 p.m. on December 5, 2011. For the reasons discussed in the Regulatory Planning and Review section above, this rule will not have a significant economic impact on a substantial number of small entities.

Assistance for Small Entities

Under section 213(a) of the Small Business Regulatory Enforcement Fairness Act of 1996 (Pub. L. 104–121), we offer to assist small entities in understanding the rule so that they can better evaluate its effects on them and participate in the rulemaking process.

Small businesses may send comments on the actions of Federal employees who enforce, or otherwise determine compliance with, Federal regulations to the Small Business and Agriculture Regulatory Enforcement Ombudsman and the Regional Small Business Regulatory Fairness Boards. The Ombudsman evaluates these actions annually and rates each agency's responsiveness to small business. If you wish to comment on actions by employees of the Coast Guard, call 1–888–REG–FAIR (1–(888) 734–3247). The Coast Guard will not retaliate against small entities that question or complain about this rule or any policy or action of the Coast Guard.

Collection of Information

This rule calls for no new collection of information under the Paperwork Reduction Act of 1995 (44 U.S.C. 3501–3520).

Federalism

A rule has implications for federalism under Executive Order 13132, Federalism, if it has a substantial direct effect on State or local governments and would either preempt State law or impose a substantial direct cost of compliance on them. We have analyzed this rule under that Order and have determined that it does not have implications for federalism.

Unfunded Mandates Reform Act

The Unfunded Mandates Reform Act of 1995 (2 U.S.C. 1531–1538) requires

Federal agencies to assess the effects of their discretionary regulatory actions. In particular, the Act addresses actions that may result in the expenditure by a State, local, or Tribal government, in the aggregate, or by the private sector of $100,000,000 or more in any one year. Though this rule will not result in such an expenditure, we do discuss the effects of this rule elsewhere in this preamble.

Taking of Private Property

This rule will not effect a taking of private property or otherwise have taking implications under Executive Order 12630, Governmental Actions and Interference with Constitutionally Protected Property Rights.

Civil Justice Reform

This rule meets applicable standards in sections 3(a) and 3(b)(2) of Executive Order 12988, Civil Justice Reform, to minimize litigation, eliminate ambiguity, and reduce burden.

Protection of Children

We have analyzed this rule under Executive Order 13045, Protection of Children from Environmental Health Risks and Safety Risks. This rule is not an economically significant rule and does not create an environmental risk to health or risk to safety that may disproportionately affect children.

Indian Tribal Governments

This rule does not have Tribal implications under Executive Order 13175, Consultation and Coordination with Indian Tribal Governments, because it does not have a substantial direct effect on one or more Indian Tribes, on the relationship between the Federal Government and Indian Tribes, or on the distribution of power and responsibilities between the Federal Government and Indian Tribes.

Energy Effects

We have analyzed this rule under Executive Order 13211, Actions Concerning Regulations That Significantly Affect Energy Supply, Distribution, or Use. We have determined that it is not a ''significant energy action'' under that order because it is not a ''significant regulatory action'' under Executive Order 12866 and is not likely to have a significant adverse effect on the supply, distribution, or use of energy. The Administrator of the Office of Information and Regulatory Affairs has not designated it as a significant energy action. Therefore, it does not require a Statement of Energy Effects under Executive Order 13211.

Technical Standards

The National Technology Transfer and Advancement Act (NTTAA) (15 U.S.C. 272 note) directs agencies to use voluntary consensus standards in their regulatory activities unless the agency provides Congress, through the Office of Management and Budget, with an explanation of why using these standards would be inconsistent with applicable law or otherwise impractical. Voluntary consensus standards are technical standards (*e.g.,* specifications of materials, performance, design, or operation; test methods; sampling procedures; and related management systems practices) that are developed or adopted by voluntary consensus standards bodies.

This rule does not use technical standards. Therefore, we did not consider the use of voluntary consensus standards.

Environment

We have analyzed this rule under Department of Homeland Security Management Directive 023–01 and Commandant Instruction M16475.lD, which guide the Coast Guard in complying with the National Environmental Policy Act of 1969 (NEPA) (42 U.S.C. 4321–4370f), and have concluded this action is one of a category of actions that do not individually or cumulatively have a significant effect on the human environment. This rule is categorically excluded, under figure 2–1, paragraph 34(g), of the Instruction. This rule involves establishing a temporary safety zone that will be enforced for a total of five hours. An environmental analysis checklist and a categorical exclusion determination are available in the docket where indicated under **ADDRESSES**.

List of Subjects in 33 CFR Part 165

Harbors, Marine safety, Navigation (water), Reporting and recordkeeping requirements, Security measures, Waterways.

For the reasons discussed in the preamble, the Coast Guard amends 33 CFR part 165 as follows:

PART 165—REGULATED NAVIGATION AREAS AND LIMITED ACCESS AREAS

■ 1. The authority citation for part 165 continues to read as follows:

Authority: 33 U.S.C. 1231; 46 U.S.C. Chapter 701, 3306, 3703; 50 U.S.C. 191, 195; 33 CFR 1.05–1, 6.04–1, 6.04–6, 160.5; Pub. L. 107–295, 116 Stat. 2064; Department of Homeland Security Delegation No. 0170.1.

■ 2. Add a temporary § 165.T07–1045 to read as follows:

§ 165.T07–1045 Safety Zone; Container Crane Relocation, Cooper and Wando Rivers, Charleston, SC.

(a) *Regulated Area.* The following regulated area is a safety zone: All waters of the Cooper and Wando Rivers within a 100 yard radius of the vessel transporting cranes from berth # 3 at Columbus Street Terminal, in position 32°47′46″ N, 79°55′49″ W, to berth # 1 at Wando Welch Terminal, in position 32°50′02″ N, 79°53′29″ W. All coordinates are North American Datum 1983.

(b) *Definition.* The term ''designated representative'' means Coast Guard Patrol Commanders, including Coast Guard coxswains, petty officers, and other officers operating Coast Guard vessels, and Federal, state, and local officers designated by or assisting the Captain of the Port Charleston in the enforcement of the regulated area.

(c) *Regulations.* (1) All persons and vessels are prohibited from entering, transiting through, anchoring in, or remaining within the regulated area unless authorized by the Captain of the Port Charleston or a designated representative.

(2) Persons and vessels desiring to enter, transit through, anchor in, or remain within the regulated area may contact the Captain of the Port Charleston by telephone at (843) 740–7050, or a designated representative via VHF radio on channel 16, to request authorization. If authorization to enter, transit through, anchor in, or remain within the regulated area is granted by the Captain of the Port Charleston or a designated representative, all persons and vessels receiving such authorization must comply with the instructions of the Captain of the Port Charleston or a designated representative.

(3) The Coast Guard will provide notice of the regulated area by Local Notice to Mariners, Broadcast Notice to Mariners, and on-scene designated representatives.

(d) *Effective Date.* This rule is effective from 9 a.m. until 2 p.m. on December 5, 2011, and will be enforced from 9 a.m. until 2 p.m. on December 5, 2011.

Dated: November 22, 2011.

M. F. White,

Captain, U.S. Coast Guard, Captain of the Port Charleston.

[FR Doc. 2011–30984 Filed 12–1–11; 8:45 am]

BILLING CODE 9110–04–P

DEPARTMENT OF DEFENSE

Department of the Army, Corps of Engineers

33 CFR Part 334

Restricted Areas and Danger Zones at Eglin Air Force Base, FL

AGENCY: U.S. Army Corps of Engineers, Department of Defense

ACTION: Final rule.

SUMMARY: The U.S. Army Corps of Engineers (Corps) is amending its restricted area/danger zone regulations to update and revise several existing danger zone and restricted area descriptions and restrictions, remove one existing restricted area and establish four new restricted areas within the Eglin Air Force Base (AFB) facilities and along the Eglin AFB facility shoreline in Florida. The Eglin AFB and Eglin Reservation span over 724 square miles with over 150 miles of waterway boundary. This amendment to the existing regulation is necessary to update Eglin AFB water safety and water boundary security in order to provide adequate protection to Eglin AFB personnel and resources in concert with changing mission goals and multi-service/agency special testing and operation needs.

DATES: *Effective Date:* January 3, 2012.

ADDRESSES: U.S. Army Corps of Engineers, Attn: CECW–CO (David B. Olson), 441 G Street NW., Washington, DC 20314–1000.

FOR FURTHER INFORMATION CONTACT: Mr. David Olson, Headquarters, Operations and Regulatory Community of Practice, Washington, DC at (202) 761–4922 or Mr. Jon M. Griffin, U.S. Army Corps of Engineers, Jacksonville District, Regulatory Division, at (904) 232–1680.

SUPPLEMENTARY INFORMATION:

Background

Pursuant to its authorities under Section 7 of the Rivers and Harbors Act of 1917 (40 Stat 266; 33 U.S.C. 1) and Chapter XIX of the Army Appropriations Act of 1919 (40 Stat 892; 33 U.S.C. 3) the Corps is amending the regulations in 33 CFR part 334 by revising five existing danger zone and restricted area descriptions and restrictions, removing one existing restricted area and establishing four new restricted areas. The proposed regulations were published in the December 28, 2009, issue of the **Federal Register** (74 FR 68552) and provided a 30-day comment period. The *http://www.regulations.gov* docket number is COE–2009–0056.

General Comments and Responses

In response to the proposed rule, comments were provided by eight individuals. Seven of the commenters voiced concerns ranging from the establishment and use of the restricted areas to the rulemaking process. The eighth commenter said they have no objection to the proposed regulations.

Most of the concerns raised were related to the new restricted areas proposed at the Camp Pinchot and Poquito housing areas. Some of the comments noted a concern that the establishment of these restricted areas would lead to a loss of property rights, would generate navigational hazards in Garnier Bayou and Poquito Bayou and eliminate their ability to utilize the waterways. Additionally, statements were provided questioning whether or not the proposed restricted areas would really provide any security and making allegations as to the perceived underlying reason for the military's request for these restricted areas.

The regulations for restricted areas only apply to areas of navigable waters of the United States and the language in this final rule has been revised to clearly state this fact. Because the proposed restricted areas are situated in navigable waters of the United States along the waterfront of existing Eglin AFB residential areas, there will not be any loss of property rights to the adjacent landowners. Neither of these two proposed restricted areas includes the construction of any structures in navigable waters, so there is no possibility to create a navigational hazard within these waterways. A commenter suggested that the United States Coast Guard perform a risk assessment of the potential hazard to navigation which might be generated by the establishment of a restricted area in Poquito Bayou. Because the proposed restricted area does not propose any changes to the number, size, or location of any structures in the Bayou, there is no possibility of creating a hazard to navigation, therefore, a risk assessment is not necessary. The language used in the proposed rule indicated that the restrictions associated with these restricted areas would be in effect 24 hours a day, 7 days a week and that entry into the restricted areas would require the permission of the Commander, Eglin AFB. These two statements generated the concern that the public would no longer be able to utilize any portions of these waterways at anytime. The language describing each of the restricted areas clearly delineates their location within the larger waterbody and they will be shown on the National Oceanic and Atmospheric Administration navigational charts. The language addressing utilization of the restricted areas was revised to note that the public is allowed full use of the restricted area as long as there are no perceived threats to the Eglin AFB facilities. The revised language also makes it clear that at low threat levels, anyone entering the restricted areas would be subject to identification checks by U.S. Air Force patrol boats. At high threat levels, entry into the restricted areas would require the permission of the Commander, Eglin AFB. It is not the Corps role to address statements pertaining to the effectiveness of these restricted areas. The Corps has the authority to issue these regulations in response to a request by the Commander of a Department of Defense facility, after soliciting public comment and evaluating the reasonably foreseeable effects on the evaluation criteria in 33 CFR part 320, especially effects on navigation and the food fishing industry. The Commander of any military facility has the responsibility to provide appropriate protection to both the facility and the personnel utilizing the facility, and determine whether restricted area regulations are needed to help provide that protection. The waterfront security analysis performed by Eglin AFB indicated a need to provide a level of protection to these residential areas. The level of protection required was determined by the Eglin AFB security personnel.

One commenter noted that if the public is going to be allowed access to the restricted areas and if identification checks are going to be required in those areas, that should be noted in the regulation. This commenter also said that the proposed rule was unclear as to the location of the restricted area in section 334.740.

We have added language to the final rule to clarify that the public may utilize the restricted areas during periods of low threat levels and that identification checks may be conducted in the restricted area. The language describing the restricted area in section 334.740 notates the beginning point, the interim points, and the termination point, as well as the distance the restricted area extends from the shoreline, clearly delineating its location within the larger waterbody. The boundaries of the restricted area will be shown on the National Oceanic and Atmospheric Administration navigational charts.

Two commenters expressed concern with the process used to disseminate the proposed rule and to receive comments. The process for establishing and

amending restricted area and danger zone regulations follows standard rulemaking procedures, including the additional procedures provided at 33 CFR 334.4. In addition to publication of the proposed rule in the December 28, 2009, issue of the **Federal Register**, the Jacksonville District issued a local public notice which was available on the Jacksonville District Regulatory Division web page.

In response to the comments received, we have made the following changes to the final rule:

We have modified the rule text to clarify that the danger zone and restricted area regulations apply only to navigable water of the United States, as defined by 33 CFR part 329.

Section 334.700(c)(2) was reworded to clarify that enforcement of the regulations in that section would be accomplished in accordance with the active security level as defined by the Department of Defense Force Protection Condition System.

Section 334.710(c) was rewritten by redesignating the proposed paragraph (c) as paragraph (c)(1) and adding paragraph (c)(2). Paragraph (c)(1) provides information pertaining to the party/ies enforcing the regulation in this section. Paragraph (c)(2) was added to clarify that enforcement of the regulations in this section would be accomplished in accordance with the active security level as defined by the Department of Defense Force Protection Condition System.

Section 334.720(c) was also rewritten by designating proposed paragraph (c) as paragraph (c)(1) and adding paragraph (c)(2). Paragraph (c)(1) provides information on the party/ies enforcing the regulation in this section. Paragraph (c)(2) was added to clarify that enforcement of the regulations in this section would be accomplished in accordance with the active security level as defined by the Department of Defense Force Protection Condition System.

In section 334.730 several changes were made. Paragraphs (a)(1) and (a)(2)(i) were modified to clarify that Harvey Lock, Louisiana is referenced because it is the ''zero mile'' location from which the mileage values denoted in the Gulf Intracoastal Waterway were measured. Paragraph (a)(2)(i) was also modified to correct one of the Gulf Intracoastal Waterway mileage values from 334.6 to 204.6. Paragraph (a)(2)(iii) was modified to expand a portion of the restricted area to provide protection for a fuel pier and associated mooring area at Hurlburt Field. Paragraph (b)(1) was subdivided to clarify the information pertaining to the danger zone. Paragraph (b)(1)(i) provides information on how the area is used and restrictions on entry into the area when it is in use. Paragraph (b)(1)(ii) was added to note that the danger zone and associated restrictions are in effect 24 hours a day, 7 days a week. Paragraph (b)(2)(i) was modified to remove the existing language stating that no person or vessel shall enter the area without permission of Eglin AFB or the Hurlburt Field Commander. In response to comments, the final rule clarifies that all persons, vessels and other craft are permitted to access the restricted areas defined in paragraph (a)(2) during times of low security threats and that they would be subject to identification checks by the U.S. Air Force patrol boats. With the exception of the Gulf Intracoastal Waterway, during times of high security threats anyone wishing to enter, transit, anchor or drift within the restricted areas noted in paragraph (a)(2) must have the permission of Eglin AFB or the Hurlburt Field Commander or his/her authorized representative. Paragraph (c) was rewritten by designating the proposed paragraph (c) as paragraph (c)(1) and adding paragraph (c)(2). Paragraph (c)(1) provides information on the party/ies enforcing the regulation of this section. Paragraph (c)(2) was added to clarify that enforcement of the regulations in this section would be accomplished in accordance with the active security level as defined by the Department of Defense Force Protection Condition System.

Section 334.740(b)(1) was modified to remove the existing language stating that no person or vessel shall enter the area without permission. In response to comments, the final rule clarifies that all persons, vessels and other craft are permitted to access the restricted area defined in paragraph (a) of this section during times of low security threats and that they would be subject to identification checks by the U.S. Air Force patrol boats. During times of high security threats anyone wishing to enter, transit, anchor or drift within the restricted area noted in paragraph (a) of this section must have the permission of the Commander, 96 Air Base Wing, Eglin AFB or his/her authorized representative. Paragraph (c)(2) was reworded to clarify that enforcement of the regulations in this section would be accomplished in accordance with the active security level as defined by the Department of Defense Force Protection Condition System.

For sections 334.742, 334.744 and 334.748, paragraph (b)(1) was modified to remove the proposed language stating that no person or vessel shall enter the area without permission. In response to comments, the final rule clarifies that all persons, vessels and other craft are permitted to access the restricted areas defined in paragraph (a) of each of these sections during times of low security threats and that they would be subject to identification checks by the U.S. Air Force patrol boats. During times of high security threats anyone wishing to enter, transit, anchor or drift within the restricted areas noted in paragraph (a) of each of these sections must have the permission of the Commander, 96 Air Base Wing, Eglin AFB or his/her authorized representative. Paragraph (c) was rewritten by designating the proposed paragraph (c) as paragraph (c)(1) and adding paragraph (c)(2). Paragraph (c)(1) provides information on the party/ies enforcing the regulation of this section. Paragraph (c)(2) was added to clarify that enforcement of the regulations in this section would be accomplished in accordance with the active security level as defined by the Department of Defense Force Protection Condition System.

Section 334.750 has been removed because the area it encompassed has been incorporated into section 334.740.

Procedural Requirements

a. *Review Under Executive Order 12866.* This regulation is issued with respect to a military function of the Department of Defense and the provisions of Executive Order 12866 do not apply.

b. *Review Under the Regulatory Flexibility Act.* The regulation has been reviewed under the Regulatory Flexibility Act (Pub. L. 96–354) which requires the preparation of a regulatory flexibility analysis for any regulation that will have a significant economic impact on a substantial number of small entities (*i.e.,* small businesses and small governments). The Corps determined that this regulation would have practically no economic impact on the public nor would it result in any anticipated navigational hazard or interference with existing waterway traffic. This regulation will have no significant economic impact on small entities.

c. *Review Under the National Environmental Policy Act.* This regulation will not have a significant impact on the quality of the human environment and, therefore, preparation of an environmental impact statement will not be required. An environmental assessment has been prepared. It may be reviewed at the district office listed at the end of the **FOR FURTHER INFORMATION CONTACT** section, above.

d. *Unfunded Mandates Act.* This regulation does not impose an

enforceable duty among the private sector and, therefore, is not a Federal private sector mandate and is not subject to the requirements of Section 202 or 205 of the Unfunded Mandates Reform Act (Pub. L. 104–4, 109 Stat. 48, 2 U.S.C. 1501 *et seq.*). We have also found under Section 203 of the Act, that small governments will not be significantly or uniquely affected by this regulation.

List of Subjects in 33 CFR Part 334

Danger zones, Navigation (water), Restricted areas, Waterways.

For the reasons set out in the preamble, the Corps amends 33 CFR part 334 as follows:

PART 334—DANGER ZONE AND RESTRICTED AREA REGULATIONS

■ 1. The authority citation for part 334 continues to read as follows:

Authority: 40 Stat. 266 (33 U.S.C. 1) and 40 Stat. 892 (33 U.S.C. 3).

■ 2. Revise § 334.700 to read as follows:

§ 334.700 Choctawhatchee Bay, aerial gunnery ranges, Air Armament Center, Eglin Air Force Base, Fla.

(a) *The danger zones.* (1) *Aerial gunnery range in west part of Choctawhatchee Bay.* The danger zone shall encompass all navigable waters of the United States as defined at 33 CFR part 329, including the waters of Choctawhatchee Bay within an area bounded by a line connecting the following coordinates, excluding that part of the area included within the aerial gunnery range along the north shore of Choctawhatchee Bay as described in paragraph (a)(2) of this section: Commencing at the northeast shore at latitude 30°28′09.11″ N, longitude 086°29′02.30″ W; thence to latitude 30°25′30″ N, longitude 086°21′30″ W; thence to latitude 30°23′34.72″ N, longitude 086°23′00.22″ W; then following the shoreline at the mean high water line to latitude 30°24′09.45″ N, longitude 086°25′00.08″ W; thence to the southwest shore at latitude 30°27′54.18″ N, longitude 086°29′18.32″ W; then following the shoreline at the mean high water line easterly to point of origin.

(2) *Aerial gunnery range along north shore of Choctawhatchee Bay.* The danger zone shall encompass all navigable waters of the United States as defined at 33 CFR part 329, including the waters of Choctawhatchee Bay within an area bounded by a line connecting the following coordinates: Commencing at the northwest shore at latitude 30°27′26″ N, longitude 086°25′30″ W; thence to latitude 30°26′00″ N, longitude 086°25′30″ W; thence to latitude 30°26′57″ N, longitude 086°20′35″ W; thence to latitude 30°26′12″ N, longitude 086°20′35″ W; thence to latitude 30°26′29″ N, longitude 086°15′00″ W; thence to the northeast shore at latitude 30°29′08.7″ N, longitude 086°15′00″ W; then following the shoreline at the mean high water line easterly to point of origin.

(b) *The regulations.* (1) *Aerial gunnery range in west part of Choctawhatchee Bay.* The aerial gunnery range in the west part of Choctawhatchee Bay (as described in paragraph (a)(1) of this section) may be used by persons and watercraft except during periods when firing is conducted. Use of the area will be advertised in advance by Eglin AFB Public Affairs. During periods of firing, traverse of this area shall not be denied to regular cargo-carrying or passenger-carrying vessels or tows proceeding on established routes. In case any such vessel is within the area, the officer in charge of gunnery operations will cause the cessation or postponement of fire until the vessel has cleared that part of the area within the range of the weapons being used. The vessel shall proceed on its normal course and shall not delay its progress.

(2) *Aerial gunnery range along north shore of Choctawhatchee Bay.* No person, vessel or other craft shall enter or remain within the aerial gunnery range along the north shore of Choctawhatchee Bay (as described in paragraph (a)(2) of this section) during times the area is active. Activation of the area will be advertised in advance by Eglin AFB Public Affairs.

(c) *Enforcement.* (1) The regulations in this section shall be enforced by the Commander, 96 Air Base Wing, Eglin AFB, Florida and such agencies as he/she may designate.

(2) Enforcement of the regulations in this section will be accomplished in accordance with the active security level as defined by the Department of Defense Force Protection Condition (FPCON) System.

■ 3. Revise § 334.710 to read as follows:

§ 334.710 The Narrows and Gulf of Mexico adjacent to Santa Rosa Island, Headquarters Air Armament Center, Eglin Air Force Base, Fla.

(a) *The restricted area.* The restricted area shall encompass all navigable waters of the United States as defined at 33 CFR part 329, including the waters of The Narrows and the Gulf of Mexico easterly of the periphery of a circular area five nautical miles in radius, centered at latitude 30°23′10.074″ N, longitude 086°48′25.433″ W (USC&GS Station Tuck 3), within the segment of a circle, three nautical miles in radius, centered at latitude 30°24′00″ N, longitude 086°41′47″ W.

(b) *The regulations.* The area will be used intermittently during daylight hours. During periods of use the entry into the area will be prohibited to all persons and navigation. Notifications will be via Eglin AFB water patrol and published in local news media in advance.

(c) *Enforcement.* (1) The regulations in this section shall be enforced by the Commander, 96 Air Base Wing, Eglin AFB, Florida and such agencies as he/she may designate.

(2) Enforcement of the regulations in this section will be accomplished in accordance with the active security level as defined by the Department of Defense Force Protection Condition (FPCON) System.

■ 4. Revise § 334.720 to read as follows:

§ 334.720 Gulf of Mexico, south from Choctawhatchee Bay; Missile test area.

(a) *The danger zone.* The danger zone shall encompass all navigable waters of the United States as defined at 33 CFR part 329, including the waters of the Gulf of Mexico south from Choctawhatchee Bay within an area described as follows: Beginning at a point five nautical miles southeasterly from USC&GS Station Tuck 3, at latitude 30°23′10.074″ N, longitude 086°48′25.433″ W, three nautical miles offshore of Santa Rosa Island; thence easterly three nautical miles offshore and parallel to shore, to a point south of Apalachicola Bay, Florida at latitude 29°32′00″ N, longitude 085°00′00″ W; thence southeasterly to latitude 29°17′30″ N, longitude 084°40′00″ W; thence southwesterly to latitude 28°40′00″ N, longitude 084°49′00″ W; thence southeasterly to latitude 28°10′00″ N, longitude 084°30′00″ W; thence 270° true to longitude 086°48′00″ W; thence due north along longitude 086°48′00″ W to the intersection of the line with a circle of five nautical miles radius centered on USC&GS Station Tuck 3, at latitude 30°23′10.074″ N, longitude 086°48′25.433″ W, thence northeasterly along the arc of the circle to the point of beginning.

(b) *The regulations.* (1) The area will be used intermittently during daylight hours for a week or 10 days at a time. Firing will take place once or twice a day for periods ordinarily of not more than one hour. Advance notice of such firings will be published in local newspapers.

(2) During periods of firing, passage through the area will not be denied to cargo-carrying or passenger-carrying

vessels or tows proceeding on established routes. In case any such vessel is within the danger zone, the officer in charge of firing operations will cause the cessation or postponement of fire until the vessel has cleared the portion of the danger area involved. The entire area involved will be under constant observation of both surface patrol vessels and air patrol planes prior to and during periods of firing and notice will be given to vessels and tows of intention to fire by buzzing low over the vessel, upon which signal vessels and tows shall proceed on their established course promptly and clear the area as soon as possible.

(3) All persons and vessels, except those identified in paragraph (b)(2) of this section, will be warned to leave the immediate danger area during firing periods by surface patrol craft. Upon being so warned, such persons and vessels shall clear the area immediately. Such periods normally will not exceed two hours.

(c) *Enforcement.* (1) The regulations in this section shall be enforced by the Commander, 96 Air Base Wing, Eglin AFB, Florida and such agencies as he/she may designate.

(2) Enforcement of the regulations in this section will be accomplished in accordance with the active security level as defined by the Department of Defense Force Protection Condition (FPCON) System.

■ 5. Revise § 334.730 to read as follows:

§ 334.730 Waters of Santa Rosa Sound and Gulf of Mexico adjacent to Santa Rosa Island, Armament Center, Eglin Air Force Base, Fla.

(a) *The areas.* (1) *The danger zone.* The danger zone shall encompass all navigable waters of the United States as defined at 33 CFR part 329, including the waters of Santa Rosa Sound and Gulf of Mexico within a circle one nautical mile in radius, centered at latitude 30°23′10.074″ N, longitude 086°48′25.433″ W (USC&GS Station Tuck 3). The portion of the area in Santa Rosa Sound includes the Gulf Intracoastal Waterway between miles 209.6 and 211.4 as measured from the Harvey Lock, Louisiana, ''zero mile'' location.

(2) *The restricted areas.* (i) *Area 1.* The restricted area shall encompass all navigable waters of the United States as defined at 33 CFR part 329, including the waters of Santa Rosa Sound and Gulf of Mexico, surrounding the danger zone described in paragraph (a)(1) of this section, within a circle five nautical miles in radius centered at latitude 30°23′10.074″ N, longitude 086°48′25.433″ W (USC&GS Station Tuck 3). The portion of the area in Santa Rosa Sound includes the Gulf Intracoastal Waterway between mile designation 204.6 and 216.4 as measured from the Harvey Lock, Louisiana, ''zero mile'' location.

(ii) *Area 2. Santa Rosa Island, North Side.* The restricted area shall encompass all navigable waters of the United States as defined at 33 CFR part 329 within the area bounded by a line connecting the following coordinates: Commencing from the shoreline at latitude 30°24′06.58″ N, longitude 086°40′25.00″ W; thence to latitude 30°24′08.08″ N, longitude 086°40′25.00″ W; then the line meanders irregularly, following the shoreline at a distance of 150 feet seaward from the mean high water line to a point at latitude 30°23′12.34″ N, longitude 086°50′57.62″ W, thence proceeding directly to a point on the shoreline at latitude 30°23′10.85″ N, longitude 086°50′57.62″ W. The area also includes all contiguous inland navigable waters which lie within the land boundaries of Eglin AFB.

(iii) *Area 3. Choctawhatchee Bay, North side—Hurlburt Field.* The restricted area shall encompass all navigable waters of the United States as defined at 33 CFR part 329 within the area bounded by a line connecting the following coordinates:

Commencing from the shoreline at latitude 30°24′28.30″ N, longitude 086°40′54.91″ W; thence to latitude 30°24′26.32″ N, longitude 086°40′54.91″ W; then the line meanders irregularly, following the shoreline at a distance of 200 feet seaward from the mean high water line to a point at latitude 30°24′20.92″ N, longitude 086°41′45.96″ W; thence directly to latitude 30°24′23.31″ N, longitude 086°42′00.20″ W; thence directly to latitude 30°24′28.83″ N, longitude 086°42′07.42″ W; thence directly to latitude 30°24′25.98″ N, longitude 086°42′17.12″ W; thence directly to longitude 30°24′26.31″ N, longitude 086°42′19.82″ W; then the line meanders irregularly following the shoreline at a distance of 200 feet seaward from the mean high water line to a point at latitude 30°24′28.80″ N, longitude 086°42′53.83″ W, thence proceeding directly to a point on the shoreline at latitude 30°24′30.79″ N, longitude 086°42′53.83″ W.

(b) *The regulations.* (1) *The danger zone.* (i) Experimental test operations will be conducted by the U.S. Air Force (USAF) within the danger zone. During periods when experimental test operations are underway, no person, vessel or other watercraft shall enter or navigate the waters of the danger zone.

(ii) The area identified in paragraph (a)(1) of this section and the associated restrictions described in paragraph (b)(1)(i) of this section are in effect 24 hours a day, 7 days a week. The area is used on an intermittent basis and, generally, any test operations shall not exceed one hour and shall not occur more than twice weekly.

(2) *The restricted areas.* (i) All persons, vessels and other craft are permitted access to the restricted areas described in paragraph (a)(2) of this section. Any person or vessel within the restricted areas will be subject to identification checks by USAF patrol boats. During times of high security threats against Eglin AFB or Hurlburt Field, all entry, transit, anchoring or drifting within the restricted areas described in paragraph (a)(2) of this section for any reason is not allowed without permission of Eglin AFB or the Hurlburt Field Commander or his/her authorized representative, except to navigate the Gulf Intracoastal Waterway. Such vessels and other watercraft shall confine their movements to the waters within the limits of the Intracoastal Waterway and shall make the passage as promptly as possible under normal vessel speed.

(ii) The areas identified in paragraph (a)(2) of this section and the associated restrictions described in paragraph (b)(2)(i) of this section are in effect 24 hours a day, 7 days a week.

(c) *Enforcement.* (1) The regulations in this section shall be enforced by the Commander, 96 Air Base Wing, Eglin AFB, Florida and such agencies as he/she may designate.

(2) Enforcement of the regulations in this section will be accomplished in accordance with the active security level as defined by the Department of Defense Force Protection Condition (FPCON) System.

■ 6. Revise § 334.740 to read as follows:

§ 334.740 North Shore Choctawhatchee Bay, Eglin Air Force Base, Fla.

(a) *The area.* The restricted area shall encompass all navigable waters of the United States as defined at 33 CFR part 329 within the area bounded by a line connecting the following coordinates: Commencing from the shoreline at latitude 30°28′59.90″ N, longitude 086°29′08.88″ W; thence to latitude 30°28′59.61″ N, longitude 086°29′01.81″ W; thence to latitude 30°29′08.01″ N, longitude 086°28′47.78″ W; then following the mean high water line at a distance of 1,000 feet to a point at latitude 30°26′48.60″ N, longitude 086°32′31.95″ W, thence proceeding directly to a point on the shoreline at latitude 30°26′53.58″ N, longitude 086°32′41.81″ W. The area also includes all contiguous inland navigable waters

that lie within the land boundaries of Eglin AFB.

(b) *The regulations.* (1) All persons, vessels and other craft are permitted access to the restricted area described in paragraph (a) of this section. Any person or vessel within the restricted area will be subject to identification checks by U.S. Air Force patrol boats. During times of high security threats against Eglin AFB, all entry, transit, anchoring or drifting within the restricted area described in paragraph (a) of this section for any reason is not allowed without the permission of the Commander, 96 Air Base Wing, Eglin AFB, and his/her authorized representative.

(2) The area identified in paragraph (a) of this section and the associated restrictions described in paragraph (b)(1) of this section are in effect 24 hours a day, 7 days a week.

(c) *Enforcement.* (1) The regulations in this section shall be enforced by the Commander, 96 Air Base Wing, Eglin AFB, Florida and such agencies as he/she may designate.

(2) Enforcement of the regulations in this section will be accomplished in accordance with the active security level as defined by the Department of Defense Force Protection Condition (FPCON) System.

■ 7. Add § 334.742 to read as follows:

§ 334.742 Eglin Camp Pinchot, Fla., at Eglin Air Force Base, Fla.; Restricted Area.

(a) *The area.* The restricted area shall encompass all navigable waters of the United States, as defined at 33 CFR part 329, within the area bounded by a line connecting the following coordinates: Commencing from the shoreline at latitude 30°28′18.68″ N, longitude 086°35′38.66″ W; thence to latitude 30°28′20.80″ N, longitude 086°35′36.25″ W; then the line meanders irregularly, following the shoreline at a distance of 300 feet seaward from the mean high water line to a point at latitude 30°28′06.02″ N, longitude 086°35′39.18″ W, thence proceeding directly to a point on the shoreline at latitude 30°28′07.47″ N, longitude 086°35′42.17″ W.

(b) *The regulations.* (1) All persons, vessels and other craft are permitted access to the restricted area described in paragraph (a) of this section. Any person or vessel within the restricted area will be subject to identification checks by U.S. Air Force patrol boats. During times of high security threats against Eglin AFB, all entry, transit, anchoring or drifting within the restricted area described in paragraph (a) of this section for any reason is not allowed without the permission of the Commander, Eglin AFB, Florida, or his/her authorized representative.

(2) The area identified in paragraph (a) of this section and the associated restrictions described in paragraph (b)(1) of this section are in effect 24 hours a day, 7 days a week.

(c) *Enforcement.* (1) The regulations in this section shall be enforced by the Commander, 96 Air Base Wing, Eglin AFB, Florida and such agencies as he/she may designate.

(2) Enforcement of the regulations in this section will be accomplished in accordance with the active security level as defined by the Department of Defense Force Protection Condition (FPCON) System.

■ 8. Add § 334.744 to read as follows:

§ 334.744 Eglin Poquito Housing at Eglin Air Force Base, Fla.; Restricted Area.

(a) *The area.* The restricted area shall encompass all navigable waters of the United States, as defined at 33 CFR part 329, within the area bounded by a line connecting the following coordinates: Commencing from the shoreline at latitude 30°27′11.68″ N, longitude 086°34′32.87″ W; thence to latitude 30°27′11.86″ N, longitude 086°34′34.59″ W; then the line meanders irregularly, following the shoreline at a distance of 150 feet seaward from the mean high water line to a point at latitude 30°27′31.25″ N, longitude 086°34′38.56″ W, thence proceeding directly to a point on the shoreline at latitude 30°27′34.07″ N, longitude 086°34′35.67″ W.

(b) *The regulations.* (1) All persons, vessels and other craft are permitted access to the restricted area described in paragraph (a) of this section. Any person or vessel within the restricted area will be subject to identification checks by U.S. Air Force patrol boats. During times of high security threats against Eglin AFB, all entry, transit, anchoring or drifting within the restricted area described in paragraph (a) of this section for any reason is not allowed without the permission of the Commander, Eglin AFB, Florida, or his/her authorized representative.

(2) The area identified in paragraph (a) of this section and the associated restrictions described in paragraph (b)(1) of this section are in effect 24 hours a day, 7 days a week.

(c) *Enforcement.* (1) The regulations in this section shall be enforced by the Commander, 96 Air Base Wing, Eglin AFB, Florida and such agencies as he/she may designate.

(2) Enforcement of the regulations in this section will be accomplished in accordance with the active security level as defined by the Department of Defense Force Protection Condition (FPCON) System.

■ 9. Add § 334.746 to read as follows:

§ 334.746 U.S. Coast Guard, Destin Station at Eglin Air Force Base, Fla.; Restricted Area.

(a) *The area.* The restricted area shall encompass all navigable waters of the United States, as defined at 33 CFR part 329, within the area bounded by a line connecting the following coordinates: Commencing from the shoreline at latitude 30°23′33.45″ N, longitude 86°31′37.51″ W; thence to latitude 30°23′35.67″ N, longitude 86°31′37.31″ W; thence to latitude 30°23′33.68″ N, longitude 86°31′30.98″ W; thence to latitude 30°23′32.00″ N, longitude 86°31′28.80″ W; thence proceeding directly to a point on the shoreline at latitude 30°23′30.14″ N, longitude 86°31′30.21″ W.

(b) *The regulations.* (1) No person or vessel shall enter the area without the permission of the Commander, U.S. Coast Guard, Destin Station, Florida, or his/her authorized representative.

(2) The area identified in paragraph (a) of this section and the associated restrictions described in paragraph (b)(1) of this section are in effect 24 hours a day, 7 days a week.

(c) *Enforcement.* The regulations in this section shall be enforced by the Commander, U.S. Coast Guard, Destin Station, and such agencies as he/she may designate.

■ 10. Add § 334.748 to read as follows:

§ 334.748 Wynnhaven Beach, Fla., at Eglin AFB; Restricted Area.

(a) *The area.* The restricted area shall encompass all navigable waters of the United States, as defined at 33 CFR part 329, within the area bounded by a line connecting the following coordinates: Commencing from the shoreline at latitude 30°24′35.06″ N, longitude 086°46′20.31″ W; thence to latitude 30°24′33.57″ N, longitude 086°46′20.31″ W; then the line meanders irregularly, following the shoreline at a distance of 150 feet seaward from the mean high water line to a point at latitude 30°24′34.81″ N, longitude 086°46′09.19″ W, thence proceeding directly to a point on the shoreline at latitude 30°24′36.30″ N, longitude 086°46′09.19″ W.

(b) *The regulations.* (1) All persons, vessels and other craft are permitted access to the restricted area described in paragraph (a) of this section. Any person or vessel within the restricted area will be subject to identification checks by U.S. Air Force patrol boats. During times of high security threats against Eglin AFB, all entry, transit, anchoring or drifting within the restricted area

described in paragraph (a) of this section for any reason is not allowed without the permission of the Commander, Eglin AFB, Florida, or his/her authorized representative.

(2) The area identified in paragraph (a) of this section and the associated restrictions described in paragraph (b)(1) of this section are in effect 24 hours a day, 7 days a week.

(c) *Enforcement.* (1) The regulations in this section shall be enforced by the Commander, 96 Air Base Wing, Eglin AFB, Florida and such agencies as he/she may designate.

(2) Enforcement of the regulations in this section will be accomplished in accordance with the active security level as defined by the Department of Defense Force Protection Condition (FPCON) System.

§ 334.750 [Removed]

■ 11. Remove § 334.750.

Dated: November 29, 2011.

Michael G. Ensch,

Chief, Operations and Regulatory Directorate of Civil Works.

[FR Doc. 2011–31017 Filed 12–1–11; 8:45 am]

BILLING CODE 3720–58–P

DEPARTMENT OF VETERANS AFFAIRS

38 CFR Part 9

RIN 2900–AO20

Servicemembers' Group Life Insurance Traumatic Injury Protection Program—Genitourinary Losses

AGENCY: Department of Veterans Affairs.

ACTION: Interim final rule.

SUMMARY: The Department of Veterans Affairs (VA) is issuing this interim final rule that amends the regulations governing the Servicemembers' Group Life Insurance Traumatic Injury Protection (TSGLI) program by adding certain genitourinary (GU) system losses to the TSGLI Schedule of Losses and defining terms relevant to these new losses. This amendment is necessary to make qualifying GU losses a basis for paying GU-injured Servicemembers TSGLI benefits. The intended effect is to expand the list of losses for which TSGLI payments can be made.

DATES: *Effective Date:* This interim final rule is effective December 2, 2011. Comments must be received on or before January 31, 2012.

Applicability Date: VA will apply this rule to injuries incurred on or after October 7, 2001.

ADDRESSES: Written comments may be submitted through *http://www.Regulations.gov;* by mail or hand-delivery to: Director, Regulations Management (02REG), Department of Veterans Affairs, 810 Vermont Ave. NW., Room 1068, Washington, DC 20420; or by fax to (202) 273–9026. Comments should indicate that they are submitted in response to ''RIN 2900–AO20—Servicemembers' Group Life Insurance Traumatic Injury Protection Program—Genitourinary Losses.'' Copies of comments received will be available for public inspection in the Office of Regulations Management, Room 1063B, between the hours of 8 a.m. and 4:30 p.m., Monday through Friday (except holidays). Please call (202) 461–4902 for an appointment. (This is not a toll-free number.) In addition, during the comment period, comments are available to view online through the Federal Docket Management System (FDMS) at *http://www.Regulations.gov.*

FOR FURTHER INFORMATION CONTACT: Monica Keitt, Attorney/Advisor, Department of Veterans Affairs Regional Office and Insurance Center (310/290B), 5000 Wissahickon Avenue, P.O. Box 8079, Philadelphia, PA 19101, (215) 842–2000, ext. 2905. (This is not a toll-free number.)

SUPPLEMENTARY INFORMATION: Congress established the Servicemembers' Group Life Insurance Traumatic Injury Protection (TSGLI) program to provide financial assistance to severely injured Servicemembers who suffer a traumatic injury directly resulting in a TSGLI scheduled loss. *See* Emergency Supplemental Appropriations Act for Defense, the Global War on Terror, and Tsunami Relief, 2005, Public Law 109–13, sec. 1032, 119 Stat. 231, 257. Until now, injuries to the genitourinary (GU) system were not specifically included in the TSGLI Schedule of Losses at 38 CFR 9.20(f), although Servicemembers who sustain GU system injuries often are eligible for TSGLI payments for other losses under the Schedule incurred as a result of the same traumatic event that caused the GU loss. For example, a Servicemember who suffers GU injuries may be eligible for a TSGLI payment if hospitalized for 15 consecutive days. 38 CFR 9.20(f)(20).

A recent Department of Defense (DoD) report showed that, from 2009 to 2010, the proportion of war casualties who arrived at Landstuhl Regional Medical Center in Germany suffering from GU injuries increased from 4.8 percent to 9.1 percent. DoD also found that approximately 570 Servicemembers sustained GU injuries involving the genitalia between October 7, 2001, and May 2, 2011. Joint Theater Trauma Registry Ad Hoc Report for October 7, 2001, to May 2, 2011, Institute for Surgical Research (May 5, 2011). In addition, the United States Army Institute of Surgical Research at Fort Sam Houston found that 5 percent of Servicemembers on the Joint Theater Trauma Registry who were admitted as a result of trauma in overseas contingency operations between October 2001 and January 2008 had one or more GU injuries. Faye B. Serkin *et al., Combat Urologic Trauma In US Military Overseas Contingency Operations,* 69 J. Trauma Suppl. 1 S175 (2010). Recent consultation with medical experts at the National Naval Medical Center (NNMC) in Bethesda, Maryland, and Brooke Army Medical Center (BAMC) in San Antonio, Texas, where many injured Servicemembers are treated, revealed that there has been a recent increase in the number of GU injuries experienced by Servicemembers. As a result, the Secretary of Veterans Affairs has decided to add certain GU system losses to the TSGLI Schedule of Losses for which a TSGLI benefit is payable.

In the TSGLI Schedule of Losses codified at 38 CFR 9.20(f), VA is redesignating current paragraphs (19) and (20) as paragraphs (20) and (21), respectively, and adding GU system losses as the new paragraph (19). The medical experts report that, generally, GU injuries treated at NNMC and BAMC involve severe damage to the perineum consisting of complete loss of the genitalia or significant damage resulting in partial or complete loss of GU functional capacity. The NNMC and BAMC medical experts also stated that erectile dysfunction is common in male Servicemembers whom they have treated following severe GU injuries. BAMC specialists noted that the majority of the recent GU injuries treated at their facility are the result of dismounted complex blast injuries, which have increased recently because military personnel in combat zones are now conducting more walking patrols, which place them outside the protection of their armored vehicles. VA is therefore adding anatomical loss and loss of use of the penis as a scheduled loss for which $50,000 in TSGLI benefits is payable.

VA is defining ''anatomical loss of the penis'' in new § 9.20(e)(6)(xxi) as amputation of the glans penis or any portion of the shaft of the penis above the glans penis (*i.e.,* closer to the body), or damage to the glans penis or shaft of the penis that requires reconstructive surgery. Because this definition and

other definitions of anatomical loss of GU organs include the word ''amputation,'' we are revising the definition of ''amputation'' in § 9.20(e)(6)(xx) to apply to genital organs as well as to limbs. VA is defining ''permanent loss of use of the penis'' in new § 9.20(e)(6)(xxii) to mean damage to the glans penis or shaft of the penis that results in complete loss of the ability to perform sexual intercourse that is reasonably certain to continue throughout the lifetime of the member.

VA is also adding to the Schedule of Losses in paragraph (f)(19) anatomical loss of one testicle, for which $25,000 in TSGLI benefits is payable, and anatomical loss of both testicles, for which $50,000 in TSGLI benefits is payable. The term ''anatomical loss of the testicle(s)'' is defined in new § 9.20(e)(6)(xxiii) as the amputation of, or damage to, one or both testicles that requires testicular salvage, reconstructive surgery, or both.

The medical experts also advised that female Servicemembers may experience anatomical loss or functional impairment of the external genitalia due to a traumatic injury. VA is therefore adding to the Schedule of Losses in § 9.20(f)(19) anatomical loss of the vulva, uterus, or vaginal canal and permanent loss of use of the vulva or vaginal canal. A TSGLI benefit of $50,000 is payable for either the anatomical loss of the vulva, uterus, or vaginal canal or for permanent loss of use of the vulva or vaginal canal. New § 9.20(e)(6)(xxv) defines ''anatomical loss of the vulva, uterus, or vaginal canal'' as the complete or partial amputation of the vulva, uterus, or vaginal canal or damage to the vulva, uterus, or vaginal canal that requires reconstructive surgery. VA defines ''permanent loss of use of the vulva or vaginal canal'' in new § 9.20(e)(6)(xxvi) as damage to the vulva or vaginal canal that results in complete loss of the ability to perform sexual intercourse that is reasonably certain to continue throughout the lifetime of the member.

VA is also adding anatomical loss of one or both ovaries to the TSGLI Schedule of Losses in paragraph (f)(19), for which TSGLI benefits of $25,000 and $50,000 are payable, respectively. The term ''anatomical loss of the ovary(ies)'' is defined in new § 9.20(e)(6)(xxvii) as the amputation of one or both ovaries or damage to one or both ovaries that requires ovarian salvage, reconstructive surgery, or both.

According to the NNMC and BAMC physicians, traumatic GU injuries may involve functional loss of the testicles or ovaries that requires hormonal replacement therapy in lieu of surgical removal. As a result, VA is adding permanent loss of use of both testicles to paragraph (f)(19) in the TSGLI Schedule of Losses, for which $50,000 in TSGLI benefits is payable. The term ''permanent loss of use of both testicles'' is defined in new § 9.20(e)(6)(xxiv) as damage to both testicles resulting in the need for hormonal replacement therapy that is medically required and reasonably certain to continue throughout the lifetime of the member. In addition, VA is adding permanent loss of use of both ovaries to paragraph (f)(19) in the TSGLI Schedule of Losses, for which $50,000 in TSGLI benefits is payable. The term ''permanent loss of use of both ovaries'' is defined in new § 9.20(e)(6)(xxviii) as damage to both ovaries resulting in the need for hormonal replacement therapy that is medically required and reasonably certain to continue throughout the lifetime of the member.

Finally, many of the reported GU injuries often require permanent urinary diversion (*i.e.,* catheterization), reconstructive surgery, or long-term rehabilitation to restore GU functional capacity, even though no anatomical loss is involved. If there is functional loss of both kidneys, hemodialysis is required, even if urinary diversion is not a factor. VA is therefore adding total and permanent loss of urinary system function to paragraph (f)(19) in the TSGLI Schedule of Losses, for which $50,000 in TSGLI benefits is payable. The term ''total and permanent loss of urinary system function'' is defined in new § 9.20(e)(6)(xxix) as damage to the urethra, ureter(s), both kidneys, bladder, or urethral sphincter muscle(s) that requires permanent urinary diversion and/or hemodialysis, either of which is reasonably certain to continue throughout the lifetime of the member.

GU losses may be combined with each other, but the maximum benefit for GU losses may not exceed $50,000, as stated in Note 1 of new § 9.20(f)(19). The GU losses are added as paragraph (19) of the TSGLI Schedule of Losses and thus can be combined with other TSGLI losses listed in § 9.20(f)(1) through (18), as explained in Note 2 of new § 9.20(f)(19). The total TSGLI payment received for all TSGLI losses, including those in combination with the new GU losses, that result from a single traumatic event may not exceed $100,000, as stated in Note 2 of § 9.20(f)(19). *See* 38 CFR 9.20(e)(5)(i). As a result of this amendment, the references to ''(18)'' in the first two paragraphs of § 9.20(f) are replaced with ''(19),'' and the reference to ''(f)(19) through (20)'' is replaced with ''(f)(20) through (21)''.

When Congress created the TSGLI program in 2005, it authorized TSGLI payments for losses resulting from traumatic injuries sustained between October 7, 2001, and December 1, 2005, if the qualifying loss was a direct result of injuries incurred in Operation Enduring Freedom or Operation Iraqi Freedom. Public Law 109–13, sec. 1032(c)(1), 119 Stat. at 259. In 2006, Congress limited such retroactive application to injuries incurred in the theater of operations for Operation Enduring Freedom or Operation Iraqi Freedom. Veterans' Housing Opportunity and Benefits Improvement Act of 2006, Public Law 109–233, sec. 501(b), 120 Stat. 397, 414. In 2010, Congress eliminated the requirement that a loss directly resulting from traumatic injury had to be incurred in such theaters of operations or in such operations in order to qualify for retroactive benefits. Veterans' Benefits Act of 2010, Public Law 111–275, sec. 408, 124 Stat. 2864, 2881. We therefore make this rule applicable to GU losses resulting from a traumatic injury incurred on or after October 7, 2001, regardless of whether the traumatic event occurred in those operations.

Administrative Procedure Act

In accordance with 5 U.S.C. 553(b)(3)(B), the Secretary of Veterans Affairs finds that there is good cause to dispense with the opportunity for prior notice and public comment with respect to this rule, which modifies the TSGLI program in a manner advantageous to Servicemembers. The Secretary finds that it is impracticable to delay this regulation for the purpose of soliciting public comments because Servicemembers who suffer these GU injuries and their families need the TSGLI payment as soon as possible to reduce the financial burden related to the Servicemembers' injuries. As the number of GU injuries continues to increase due to more ground troop patrols in high risk areas, the number of potential Servicemembers that may need assistance under this rule will also increase. For this reason, the Secretary of Veterans Affairs is issuing this rule as an interim final rule. The Secretary of Veterans Affairs will consider and address comments that are received within 60 days of the date this interim final rule is published in the **Federal Register.** For the same reasons, the Secretary of Veterans Affairs finds there is good cause for dispensing with a delayed effective date for this rule.

Unfunded Mandates

The Unfunded Mandates Reform Act of 1995 requires, at 2 U.S.C. 1532, that

agencies prepare an assessment of anticipated costs and benefits before issuing any rule that may result in an expenditure by State, local, and Tribal governments, in the aggregate, or by the private sector of $100 million or more (adjusted annually for inflation) in any given year. This rule would have no such effect on State, local, or Tribal governments or on the private sector.

Paperwork Reduction Act

This proposed rule contains no provisions constituting a collection of information under the Paperwork Reduction Act (44 U.S.C. 3501–3521).

Executive Orders 12866 and 13563

Executive Orders 12866 and 13563 direct agencies to assess the costs and benefits of available regulatory alternatives and, when regulation is necessary, to select regulatory approaches that maximize net benefits (including potential economic, environmental, public health and safety, and other advantages; distributive impacts; and equity). Executive Order 13563 (Improving Regulation and Regulatory Review) emphasizes the importance of quantifying both costs and benefits, reducing costs, harmonizing rules, and promoting flexibility. Executive Order 12866 (Regulatory Planning and Review) defines a ''significant regulatory action'' requiring review by the Office of Management and Budget (OMB) as ''any regulatory action that is likely to result in a rule that may: (1) Have an annual effect on the economy of $100 million or more or adversely affect in a material way the economy, a sector of the economy, productivity, competition, jobs, the environment, public health or safety, or State, local, or Tribal governments or communities; (2) Create a serious inconsistency or otherwise interfere with an action taken or planned by another agency; (3) Materially alter the budgetary impact of entitlements, grants, user fees, or loan programs or the rights and obligations of recipients thereof; or (4) Raise novel legal or policy issues arising out of legal mandates, the President's priorities, or the principles set forth in this Executive Order.''

VA has examined the economic, interagency, budgetary, legal, and policy implications of this regulatory action and has determined that it is not a significant regulatory action under Executive Order 12866.

Regulatory Flexibility Act

The Secretary of Veterans Affairs hereby certifies that this interim final rule will not have a significant economic impact on a substantial number of small entities as they are defined in the Regulatory Flexibility Act, 5 U.S.C. 601 *et seq.* This interim final rule will directly affect only individuals and will not directly affect small entities. Therefore, pursuant to 5 U.S.C. 605(b), this rule is exempt from the initial and final regulatory flexibility analysis requirements of sections 603 and 604.

Catalog of Federal Domestic Assistance Number and Title

The Catalog of Federal Domestic Assistance Program number and title for this regulation is 64.103, Life Insurance for Veterans.

Signing Authority

The Secretary of Veterans Affairs, or designee, approved this document and authorized the undersigned to sign and submit the document to the Office of the Federal Register for publication electronically as an official document of the Department of Veterans Affairs. John R. Gingrich, Chief of Staff, Department of Veterans Affairs, approved this document on October 27, 2011, for publication.

List of Subjects in Part 9

Life insurance, Military personnel, Veterans.

Dated: November 29, 2011.

Robert C. McFetridge,

Director of Regulation Policy and Management, Office of the General Counsel, Department of Veterans Affairs.

For the reasons stated in the preamble, the Department of Veterans Affairs is amending 38 CFR part 9 as follows:

PART 9—SERVICEMEMBERS' GROUP LIFE INSURANCE AND VETERANS' GROUP LIFE INSURANCE

■ 1. The authority citation for part 9 continues to read as follows:

Authority: 38 U.S.C. 501, 1965–1980A, unless otherwise noted.

■ 2. Section 9.20 is amended by:
■ a. Revising paragraph (e)(6)(xx);
■ b. Adding paragraphs (e)(6)(xxi) through (xxix);
■ c. Redesignating paragraphs (f)(19) and (f)(20) as paragraphs (f)(20) and (f)(21), respectively;
■ d. Adding new paragraph (f)(19);
■ e. The two introductory paragraphs in the table in paragraph (f) are revised.

The revision and additions reads as follows:

§ 9.20 Traumatic injury protection.

* * * * *

(e) * * *

(6) * * *

(xx) The term *amputation* means the severance or removal of a limb or genital organ or part of a limb or genital organ resulting from trauma or surgery. With regard to limbs an amputation above a joint means a severance or removal that is closer to the body than the specified joint is.

(xxi) The term *anatomical loss of the penis* is defined as amputation of the glans penis or any portion of the shaft of the penis above the glans penis (*i.e.* closer to the body) or damage to the glans penis or shaft of the penis that requires reconstructive surgery.

(xxii) The term *permanent loss of use of the penis* is defined as damage to the glans penis or shaft of the penis that results in complete loss of the ability to perform sexual intercourse that is reasonably certain to continue throughout the lifetime of the member.

(xxiii) The term *anatomical loss of the testicle(s)* is defined as the amputation of, or damage to, one or both testicles that requires testicular salvage, reconstructive surgery, or both.

(xxiv) The term *permanent loss of use of both testicles* is defined as damage to both testicles resulting in the need for hormonal replacement therapy that is medically required and reasonably certain to continue throughout the lifetime of the member.

(xxv) The term *anatomical loss of the vulva, uterus, or vaginal canal* is defined as the complete or partial amputation of the vulva, uterus, or vaginal canal or damage to the vulva, uterus, or vaginal canal that requires reconstructive surgery.

(xxvi) The term *permanent loss of use of the vulva or vaginal canal* is defined as damage to the vulva or vaginal canal that results in complete loss of the ability to perform sexual intercourse that is reasonably certain to continue throughout the lifetime of the member.

(xxvii) The term *anatomical loss of the ovary(ies)* is defined as the amputation of one or both ovaries or damage to one or both ovaries that requires ovarian salvage, reconstructive surgery, or both.

(xxviii) The term *permanent loss of use of both ovaries* is defined as damage to both ovaries resulting in the need for hormonal replacement therapy that is medically required and reasonably certain to continue throughout the lifetime of the member.

(xxix) The term *total and permanent loss of urinary system function* is defined as damage to the urethra, ureter(s), both kidneys, bladder, or urethral sphincter muscle(s) that requires urinary diversion and/or

hemodialysis, either of which is reasonably certain to continue throughout the lifetime of the member.

(f) * * *

For losses listed in paragraphs (f)(1) through (19) of this section, multiple losses resulting from a single traumatic event may be combined for purposes of a single payment (except where noted otherwise); however, the total payment amount may not exceed $100,000 for losses resulting from a single traumatic event. Payments for losses listed in paragraphs (f)(20) through (21) of this section may not be made in addition to payments for losses under paragraphs (f)(1) through (19)—only the higher amount will be paid. The total payment amount may not exceed $100,000 for losses resulting from a single traumatic event.	
If the loss is—	Then the amount payable for the loss is—
(19) Genitourinary Losses	
■ Anatomical loss of the penis	$50,000
■ Permanent loss of use of the penis	50,000
■ Anatomical loss of one testicle	25,000
■ Anatomical loss of both testicles	50,000
■ Permanent loss of use of both testicles	50,000
■ Anatomical loss of the vulva, uterus, or vaginal canal	50,000
■ Permanent loss of use of the vulva or vaginal canal	50,000
■ Anatomical loss of one ovary	25,000
■ Anatomical loss of both ovaries	50,000
■ Permanent loss of use of both ovaries	50,000
■ Total and permanent loss of urinary system function	50,000

Note 1: Losses due to genitourinary injuries may be combined with each other, but the maximum benefit for genitourinary losses may not exceed $50,000.

Note 2: Any genitourinary loss may be combined with other injuries listed in § 9.20(f)(1) through (18) and treated as one loss, provided that all losses are the result of a single traumatic event. However, the total payment may not exceed $100,000.

* * * * *

[FR Doc. 2011–31020 Filed 12–1–11; 8:45 am]

BILLING CODE 8230–01–P

POSTAL SERVICE

39 CFR Part 111

Express Mail Domestic Postage Refund Policy and Waiver of Signature

AGENCY: Postal Service™.

ACTION: Final rule.

SUMMARY: The Postal Service is revising *Mailing Standards of the United States Postal Service,* Domestic Mail Manual (DMM®) throughout various sections to modify the policy for filing claims for domestic Express Mail® postage refunds from 90 days to 30 days after the date of mailing, and to change the Express Mail ''waiver of signature'' standard for domestic items by obtaining an addressee's signature only when the mailer selects the ''signature required'' option on the Express Mail label.

DATES: *Effective Date:* January 22, 2012.

FOR FURTHER INFORMATION CONTACT: Lisa Bobb-Semple at (202) 268–3391 or Garry Rodriguez (202) 268–7281.

SUPPLEMENTARY INFORMATION: On October 6, 2011, the Postal Service published a **Federal Register** proposed rule (76 FR 62000–62002) inviting comments on revisions to the standards for Express Mail to modify the policy for filing claims for domestic Express Mail postage and to change the Express Mail ''waiver of signature'' standard for domestic items. The Postal Service received several comments in response to this proposed rule that are summarized later in this notice.

The Postal Service is revising the DMM to align the refund policy for domestic Express Mail with the industry standard for overnight products by requiring all claims for postage refunds to be filed within 30 days of the date of mailing instead of the current filing timeline of 90 days.

Additionally, in conjunction with the implementation of the January 2012 redesigned Express Mail Label 11–B and Label 11–F, *Express Mail Post Office to Addressee,* the Postal Service is modifying both labels, by eliminating the ''waiver of signature'' check box. A customer sending an Express Mail item, and requiring an addressee's signature, must select the new ''signature required'' box on the new Express Mail label. If the box is not selected, the Postal Service will not obtain a signature from the addressee upon delivery of Express Mail Next Day Delivery and Express Mail Second Day Delivery items. Instead, the carrier will scan the barcode and leave the item in the customer's mail receptacle or other secure location to document delivery.

Express Mail Hold For Pickup service always requires the signature of the addressee or addressee's agent. Therefore, the Express Mail Label 11–HFPU, *Express Mail Hold For Pickup,* will not be modified to reflect the new ''signature required'' option.

Comments

Five comments were received regarding the proposed rule, addressing multiple issues.

Three commenters expressed concern over the change to modify the policy for filing claims for domestic Express Mail postage from 90 days to 30 days. Two of the commenters voiced concern that 30 days is too short for commercial mailers and mailing agents. A 30-day limit on the sender's request for a refund is longer than the current industry standard. Data shows refund requests received outside of the 30-day limit are currently the exception. The change to a 30-day submission limit encompasses only the mailer request for refunds due to a failure to deliver Express Mail shipments on time. The current process for validating account charges and identifying corrections or adjustments that may be necessary will not change.

One commenter provided an interpretation of how the new Express Mail Label 11–B and 11–F, dated January 2012, and the labels printed prior to January 2012 will be used. The interpretation was correct. Effective January 22, 2012, when a customer uses a new Label 11–B or Label 11–F, a signature will only be obtained if the

''signature required'' check box is marked. When a customer uses a Label 11–B or Label 11–F printed prior to January 2012, a signature will be required unless the ''waiver of signature'' check box is marked.

The same commenter had three additional questions:

1. What is the recourse when a signature is requested and is not obtained or the piece is not delivered? Customers are encouraged to apply for the postage refund when a service expected is not rendered. Under these circumstances, a postage refund will continue to be considered on a case-by-case basis.

2. Will scanning on delivery still be required? The scan procedures will not change. A delivered scan event is required to be entered even when the addressee signature is not required, as it is today when the signature is waived. When the delivering employee indicates that a signature is not required (waived), there is no scan of the PS Form 3849 and the customer will only receive the delivery date when accessing the delivery record on *USPS.com.*

3. How will the occasional Express Mail user be made aware of the requirement that articles with additional insurance must be signed for? If the signature box is not checked, how will the employee delivering the mailpiece determine insurance was chosen? Both the current label and the new label clearly indicate that a signature is required when additional insurance is purchased. The postal software automatically requires a signature if additional insurance is purchased today. A retail associate will also be required to advise the customer that a signature is required when additional insurance is purchased during a retail window transaction. Because insurance claims are not handled by delivery employees, they will not need to determine if additional insurance has been purchased.

Two commenters supported the proposed change to the Express Mail postage refund policy and one of the commenters also supported the change to eliminate the waiver of signature option and require a customer to select the new ''signature required'' box on the Express Mail label.

One commenter also recommended changes to the 5-day holding period for unclaimed Express Mail pieces. The Postal Service has determined that this suggestion is outside the scope of this final rule, but may take the suggestion under consideration for a future rule.

The Postal Service adopts the following changes to *Mailing Standards of the United States Postal Service,* Domestic Mail Manual (DMM), incorporated by reference in the *Code of Federal Regulations.* See 39 CFR 111.1.

List of Subjects in 39 CFR Part 111

Administrative practice and procedure, Postal Service.

Accordingly, 39 CFR Part 111 is amended as follows:

PART 111—[AMENDED]

■ 1. The authority citation for 39 CFR Part 111 continues to read as follows:

Authority: 5 U.S.C. 552(a); 13 U.S.C. 301–307; 18 U.S.C. 1692–1737; 39 U.S.C. 101, 401, 403, 404, 414, 416, 3001–3011, 3201–3219, 3403–3406, 3621, 3622, 3626, 3632, 3633, and 5001.

■ 2. Revise the following sections of *Mailing Standards of the United States Postal Service,* Domestic Mail Manual (DMM) as follows:

Mailing Standards of the United States Postal Service, Domestic Mail Manual (DMM)

* * * * *

100 Retail Letters, Cards, Flats, and Parcels

* * * * *

110 Express Mail

113 Prices and Eligibility

* * * * *

4.0 Service Features of Express Mail

4.1 General

[Revise the text of 4.1 by combining the introductory text and text of item a and deleting item b in its entirety as follows:]

Customers may access delivery information at *www.usps.com* or by calling 1–(800) 222–1811 toll-free and providing the article number. A delivery record, including the addressee's signature, will be faxed or mailed upon request. See 115.2.2 for more information regarding the addressee's signature.

* * * * *

115 Mail Preparation

* * * * *

2.0 Express Mail Next Day and Second Day

* * * * *

2.2 Waiver of Signature

[Revise the first sentence of 2.2 as follows:]

For editions of Express Mail Label 11–B or Label 11–F, *Express Mail Post Office to Addressee,* printed before January 2012, a mailer sending an Express Mail item may instruct the USPS to deliver an Express Mail Next Day Delivery or Express Mail Second Day Delivery item without obtaining the signature of the addressee or the addressee's agent by checking and signing the waiver of signature on Label 11–B or Label 11–F, or indicating waiver of signature is requested on single-ply commercial label. * * *

[Renumber current item 2.3 as 2.4 and add new 2.3 as follows:]

2.3 Signature Required

For editions of Express Mail Label 11–B or Label 11–F printed on or after January 2012, a mailer sending an Express Mail item, *and requiring the addressee's signature,* must instruct USPS to obtain a signature from the addressee upon delivery of the item by checking the ''signature required'' box on Label 11–B or Label 11–F or indicating signature is requested on single-ply commercial label. If the signature required box is selected, an image of the signature will be provided to mailers when accessing delivery information. A mailer must select signature service for Express Mail Custom Designed Service, Express Mail COD, or Express Mail with additional insurance.

* * * * *

200 Commercial Letters and Cards

* * * * *

210 Express Mail

213 Prices and Eligibility

* * * * *

4.0 Service Features of Express Mail

4.1 General

[Revise the text of current item 4.1 by combining the introductory text and the text of item a, and deleting item b in its entirety as follows:]

Customers may access delivery information at *www.usps.com* or by calling 1–(800) 222–1811 toll-free and providing the article number. A delivery record, including the addressee's signature, will be faxed or mailed upon request. See 215.2.2 for more information regarding the addressee's signature.

* * * * *

215 Mail Preparation

* * * * *

2.0 Express Mail Next Day and Second Day

* * * * *

2.2 Waiver of Signature

[Revise the first sentence of 2.2 as follows:]

For editions of Express Mail Label 11–B or Label 11–F, *Express Mail Post Office to Addressee,* printed before January 2012, a mailer sending an Express Mail item may instruct the USPS to deliver an Express Mail Next Day Delivery or Express Mail Second Day Delivery item without obtaining the signature of the addressee or the addressee's agent by checking and signing the waiver of signature on Label 11–B or Label 11–F, or indicating waiver of signature is requested on single-ply commercial label. * * *

[Renumber 2.3 as 2.4 and add new 2.3 as follows:]

2.3 Signature Required

For editions of Express Mail Label 11–B or Label 11–F printed on or after January 2012, a mailer sending an Express Mail item, *and requiring the addressee's signature,* must instruct USPS to obtain a signature from the addressee upon delivery of the item by checking the ''signature required'' box on Label 11–B or Label 11–F or indicating signature is requested on single-ply commercial label. If the signature required box is selected, an image of the signature will be provided when accessing delivery information.

* * * * *

3.0 Express Mail Custom Designed

* * * * *

[Revise the title and text of 3.2 as follows:]

3.2 Signature Required

The addressee's (or agent's) signature is required for all Express Mail Custom Designed service.

* * * * *

300 Commercial Flats

* * * * *

310 Express Mail

313 Prices and Eligibility

* * * * *

4.0 Service Features of Express Mail

4.1 General

[Revise the current text of 4.1 by combining the introductory text and the text of item a, and deleting item b in its entirety as follows:]

Customers may access delivery information at *www.usps.com* or by calling 1–(800) 222–1811 toll-free and providing the article number. A delivery record, including the addressee's signature, will be faxed or mailed upon request. See 315.2.2 for more information regarding the addressee's signature.

* * * * *

315 Mail Preparation

* * * * *

2.0 Express Mail Next Day and Second Day

* * * * *

2.2 Waiver of Signature

[Revise the first sentence of 2.2 as follows:]

For editions of Express Mail Label 11–B or Label 11–F, *Express Mail Post Office to Addressee,* printed before January 2012, a mailer sending an Express Mail item may instruct the USPS to deliver an Express Mail Next Day Delivery or Express Mail Second Day Delivery item without obtaining the signature of the addressee or the addressee's agent by checking and signing the waiver of signature on Label 11–B or Label 11–F, or indicating waiver of signature is requested on single-ply commercial label. * * *

[Renumber current item 2.3 as 2.4 and add new 2.3 as follows:]

2.3 Signature Required

For editions of Express Mail Label 11–B or Label 11–F printed on or after January, 2012, a mailer sending an Express Mail item, *and requiring the addressee's signature,* must instruct USPS to obtain a signature from the addressee upon delivery of the item by checking the ''signature required'' box on Label 11–B or Label 11–F or indicating signature is requested on single-ply commercial label. If the signature required box is selected, an image of the signature will be provided when accessing delivery information.

* * * * *

3.0 Express Mail Custom Designed

* * * * *

[Revise the title and text of 3.2 as follows:]

3.2 Signature Required

The addressee's (or agent's) signature is required for all Express Mail Custom Designed service.

* * * * *

400 Commercial Parcels

* * * * *

410 Express Mail

413 Prices and Eligibility

* * * * *

4.0 Service Features of Express Mail

4.1 General

[Revise the current text of 4.1 by combining the introductory text and text of item a, and deleting item b in its entirety as follows:]

Customers may access delivery information at *http://www.usps.com* or by calling 1–(800) 222–1811 toll-free and providing the article number. A delivery record, including the addressee's signature, will be faxed or mailed upon request. See 415.2.2 for more information regarding the addressee's signature.

* * * * *

415 Mail Preparation

* * * * *

2.0 Express Mail Next Day and Second Day

* * * * *

2.2 Waiver of Signature

[Revise the first sentence of 2.2 as follows:]

For editions of Express Mail Label 11–B or Label 11–F, *Express Mail Post Office to Addressee,* printed before January 2012, a mailer sending an Express Mail item may instruct the USPS to deliver an Express Mail Next Day Delivery or Express Mail Second Day Delivery item without obtaining the signature of the addressee or the addressee's agent by checking and signing the waiver of signature on Label 11–B or Label 11–F, or indicating waiver of signature is requested on single-ply commercial label. * * *

[Renumber 2.3 as 2.4 and add new 2.3 as follows:]

2.3 Signature Required

For editions of Express Mail Label 11–B or Label 11–F printed on or after January 2012, a mailer sending an Express Mail item, *and requiring the addressee's signature,* must instruct USPS to obtain a signature from the addressee upon delivery of the item by checking the ''signature required'' box on Label 11–B or Label 11–F or indicating signature is requested on single-ply commercial label. If the signature required box is selected, an image of the signature will be provided when accessing delivery information.

* * * * *

3.0 Express Mail Custom Designed

* * * * *

[Revise the title and text of 3.2 as follows:]

3.2 Signature Required

The addressee's (or agent's) signature is required for all Express Mail Custom Designed service.

* * * * *

500 Additional Mailing Services

503 Extra Services

1.0 Extra Services for Express Mail

1.1 Available Services

* * * * *

1.1.6 COD

[Revise 1.1.6 by adding a new last sentence as follows:]

* * * A signature is required for COD service.

1.1.7 Insurance and Indemnity

Express Mail is insured against loss, damage, or missing contents, subject to these standards:

* * * * *

[Revise item 1.1.7b as follows:]

b. All Express Mail signed for by the addressee or the addressee's agent constitutes a valid delivery, and no indemnity for loss is paid. For Express Mail items not requiring a signature, a delivered scan event constitutes a valid delivery, and no indemnity for loss is paid.

* * * * *

1.1.8 Additional Insurance

[Revise the last sentence of 1.1.8 as follows:]

* * * When ''signature required'' service is not requested, or when ''waiver of signature'' is requested additional insurance is not available.

* * * * *

12.0 Collect on Delivery (COD)

* * * * *

12.2 Basic Information

* * * * *

12.2.5 Express Mail COD

[Revise the first sentence of 12.2.5 as follows:]

Any article sent COD also may be sent by Express Mail Next Day and Express Mail Second Day service when a signature is requested. * * *

* * * * *

600 Basic Standards for All Mailing Services

601 Mailability

* * * * *

11.0 Cigarettes and Smokeless Tobacco

* * * * *

11.5 Exception for Business/Regulatory Purposes

* * * * *

11.5.2 Mailing

* * * All mailings under the business/regulatory purposes exception must:

[Revise item 11.5.2a as follows:]

a. Be entered in a face-to-face transaction with a postal employee as Express Mail with Hold For Pickup service (Carrier Pickup service not permitted);

* * * * *

11.6 Exception for Certain Individuals

* * * * *

11.6.2 Mailing

No customer may send or cause to be sent more than 10 mailings under this exception in any 30-day period. Each mailing under the certain individuals exception must:

[Revise item 11.6.2a as follows:]

a. Be entered as Express Mail with an Adult Signature extra service (see 503.8.0), or Express Mail with Hold For Pickup service (Carrier Pickup service not permitted); unless shipped to APO/FPO/DPO addresses under 11.6.4.

* * * * *

11.7 Consumer Testing Exception

* * * * *

11.7.2 Mailing

* * * Mailings must be tendered under the following conditions:

* * * * *

b. All mailings under the consumer testing exception:

[Revise 11.7.2b1 as follows:]

1. Must be entered in face-to-face transactions with postal employees as Express Mail with Hold For Pickup service requested (Carrier Pickup service not permitted);

* * * * *

604 Postage Payment Methods

* * * * *

9.0 Refunds and Exchanges

* * * * *

9.5 Express Mail Postage Refund

* * * * *

9.5.2 Conditions for Refund

[Revise 9.5.2 to change the refund request days from 90 to 30 days, and consolidate the text in the introductory paragraph and items a and b as follows:]

A postage refund request must be made within 30 days after the date of mailing. Except as provided in 114.2.0, 214.3.0, 314.3.0, and 414.3.0, a mailer may file for a postage refund only if the item was not delivered, delivery was not attempted, or if the item was not made available for claim by the delivery date and time specified at the time of mailing.

9.5.3 Refunds Not Given

[Revise the DMM references in 9.5.3 to include 214.3.0 and 314.3.0 as follows:]

A postage refund will not be given if the guaranteed service was not provided due to any of the circumstances in 114.2.0, 214.3.0, 314.3.0, and 414.3.0.

* * * * *

700 Special Standards

703 Nonprofit Standard Mail and Other Unique Eligibility

* * * * *

2.0 Overseas Military Mail

* * * * *

2.6 Express Mail Military Service (EMMS)

* * * * *

[Revise the title and text of 2.6.10 as follows:]

2.6.10 Signature Required

A signature is required for Express Mail Military Service.

* * * * *

We will publish an appropriate amendment to 39 CFR part 111 to reflect these changes.

Stanley F. Mires,

Attorney, Legal Policy & Legislative Advice.

[FR Doc. 2011–30974 Filed 12–1–11; 8:45 am]

BILLING CODE 7710–12–P

ENVIRONMENTAL PROTECTION AGENCY

40 CFR Part 52

[EPA–R03–OAR–2011–0469; FRL–9498–7]

Approval and Promulgation of Air Quality Implementation Plans; West Virginia and Ohio; Determinations of Attainment of the 1997 Annual Fine Particle Standard for the Parkersburg-Marietta and Wheeling Nonattainment Areas

AGENCY: Environmental Protection Agency (EPA).

ACTION: Final rule.

SUMMARY: EPA is making determinations that the Parkersburg-Marietta, West Virginia-Ohio (WV-OH) fine particle ($PM_{2.5}$) nonattainment area and the Wheeling, WV-OH $PM_{2.5}$ nonattainment

area (hereafter referred to as ''Areas'') have attained the 1997 annual $PM_{2.5}$ National Ambient Air Quality Standard (NAAQS) by their applicable attainment date of April 5, 2010. These determinations are based upon complete, quality-assured, and certified ambient air monitoring data for the 2007–2009 monitoring period. EPA is finding these Areas to be in attainment, in accordance with the requirements of the Clean Air Act (CAA).

DATES: *Effective Date:* This final rule is effective on January 3, 2012.

ADDRESSES: EPA has established a docket for this action under Docket ID Number EPA–R03–OAR–2011–0469. All documents in the docket are listed in the *http://www.regulations.gov* Web site. Although listed in the electronic docket, some information is not publicly available, *i.e.,* confidential business information (CBI) or other information whose disclosure is restricted by statute. Certain other material, such as copyrighted material, is not placed on the Internet and will be publicly available only in hard copy form. Publicly available docket materials are available either electronically through *http://www.regulations.gov* or in hard copy for public inspection during normal business hours at the Air Protection Division, U.S. Environmental Protection Agency, Region III, 1650 Arch Street, Philadelphia, Pennsylvania 19103.

FOR FURTHER INFORMATION CONTACT: Region 3, Irene Shandruk, Office of Air Program Planning (3AP30), Environmental Protection Agency, Region 3, 1650 Arch Street, Philadelphia, PA 19103–2029, (215) 814–2166, *shandruk.irene@epa.gov.* Region 5, Carolyn Persoon, Control Strategies Section, Air Programs Branch (AR–18J), Environmental Protection Agency, Region 5, 77 West Jackson Boulevard, Chicago, Illinois 60604, (312) 353–8290, *persoon.carolyn@epa.gov.*

SUPPLEMENTARY INFORMATION:

I. Background

Throughout this document, whenever ''we,'' ''us,'' or ''our'' is used, we mean EPA. On July 18, 1997 (62 FR 36852), EPA established a health-based $PM_{2.5}$ NAAQS at 15.0 micrograms per cubic meter (μg/m³) based on a 3-year average of annual mean $PM_{2.5}$ concentrations (hereafter referred to as ''the annual $PM_{2.5}$ NAAQS'' or ''the annual standard''). At that time, EPA also established a 24-hour standard of 65 μg/m³ (the ''1997 24-hour standard''). *See,* 40 CFR 50.7. On January 5, 2005 (70 FR 944), EPA published its air quality designations and classifications for the 1997 p.m.$_{2.5}$ NAAQS based upon air quality monitoring data from those monitors for calendar years 2001–2003. These designations became effective on April 5, 2005. The Parkersburg-Marietta, WV-OH and Wheeling, WV-OH nonattainment areas were designated nonattainment for the 1997 p.m.$_{2.5}$ NAAQS during this designations process. *See,* 40 CFR 81.349 (West Virginia) and 40 CFR 81.336 (Ohio). The Parkersburg-Marietta, WV-OH nonattainment area consists of Wood County, WV, the Grant Tax District of Pleasants County, WV, and Washington County, OH. The Wheeling, WV-OH nonattainment area consists of Marshall County, WV, Ohio County, WV, and Belmont County, OH.

EPA previously issued determinations of attainment of the 1997 annual $PM_{2.5}$ NAAQS for each of these Areas pursuant to 40 CFR 51.1004(c). These determinations were published in the **Federal Register** on November 20, 2009 (74 FR 60199) and remain in effect.

Under CAA section 179(c), EPA is required to make a determination that a nonattainment area has attained by its applicable attainment date, and publish that determination in the **Federal Register**. The determination of attainment is not equivalent to a redesignation, and the state must still meet the statutory requirements for redesignation in order for the Areas to be redesignated to attainment.

Complete, quality-assured, and certified $PM_{2.5}$ air quality monitoring data recorded in the EPA Air Quality System (AQS) database for 2007–2009, show that the Parkersburg-Marietta, WV-OH and Wheeling, WV-OH nonattainment areas attained the 1997 annual $PM_{2.5}$ NAAQS by their applicable attainment date.

On July 21, 2011 (76 FR 43634), EPA published a notice of proposed rulemaking (NPR) for the States of West Virginia and Ohio. The NPR proposed to determine that the Parkersburg-Marietta, WV-OH $PM_{2.5}$ nonattainment area and the Wheeling, WV-OH $PM_{2.5}$ nonattainment area have attained the 1997 annual $PM_{2.5}$ NAAQS by the applicable attainment date of April 5, 2010. The proposal is based upon complete, quality-assured, and certified ambient air monitoring data for the 2007–2009 monitoring period and EPA's determinations are in accordance with EPA's $PM_{2.5}$ Implementation Rule of April 25, 2007 (72 FR 20664). One comment was submitted on the July 21, 2011 NPR (76 FR 43634). A summary of the comment and EPA's response is provided in section III of this document.

II. What is EPA's analysis of the relevant air quality data?

EPA has reviewed the ambient air monitoring data for $PM_{2.5}$, consistent with the requirements contained in 40 CFR part 50 and recorded in the data in the EPA AQS database for the Parkersburg-Marietta, WV-OH and Wheeling, WV-OH nonattainment areas for the monitoring period from 2007–2009. On the basis of that review, EPA is determining that the Areas attained the 1997 annual $PM_{2.5}$ NAAQS by the applicable April 5, 2010, attainment date.

Under EPA regulations at 40 CFR 50.7, the annual primary and secondary $PM_{2.5}$ standards are met when the annual arithmetic mean concentrations, as determined in accordance with 40 CFR part 50, appendix N, is less than or equal to 15.0 μg/m³, at all relevant monitoring sites. The values calculated in accordance with 40 CFR part 50, appendix N, are referred to as design values, and these values are used to determine if an area is attaining the $PM_{2.5}$ NAAQS. According to the $PM_{2.5}$ implementation rule, the attainment date for these Areas is April 5, 2010, and the monitoring data from 2007–2009 is used to determine if the Areas attained by April 5, 2010.

Tables 1 shows the $PM_{2.5}$ design values for each monitor in the Parkersburg-Marietta, WV-OH nonattainment area and the Wheeling, WV-OH nonattainment area, respectively, for the years 2007–2009. All 2007–2009 design values are below 15.0 μg/m³, and all monitors meet the data completeness requirements. Therefore, the Parkersburg-Marietta, WV-OH and Wheeling, WV-OH nonattainment areas attained the 1997 annual $PM_{2.5}$ NAAQS by their attainment date.

TABLE 1—ANNUAL $PM_{2.5}$ DESIGN VALUES FOR PARKERSBURG-MARIETTA, WV-OH AND WHEELING, WV-OH NONATTAINMENT AREAS *

State	County	Monitor ID	Certified annual design value 2007–2009 (μg/m³)
Parkersburg-Marietta, WV-OH			
West Virginia	Wood County	541071002	13.7
	Grant Tax District of Pleasants County	No monitor	
Ohio	Washington County	No monitor	
Wheeling, WV-OH			
West Virginia	Marshall County	540511002	13.4
	Ohio County	540690010	13.2
Ohio	Belmont County	No monitor	

* The data presented in Table 1 are available at *http://www.epa.gov/air/airtrends/values.html.*

III. Summary of Public Comment and EPA Response

Comment: A commenter expressed concern about implementing a new, revised standard for ozone and stated that the current 1997 8-hour ozone standard should be left in place.

Response: As stated in the notice of proposed rulemaking, this rulemaking concerns EPA's determinations that the Parkersburg-Marietta, WV-OH and Wheeling, WV-OH nonattainment areas have attained the 1997 annual $PM_{2.5}$ NAAQS. These determinations concern only whether these areas meet the 1997 annual $PM_{2.5}$ standard, and do not relate to any other NAAQS. The commenter expressed an opinion as to whether the current NAAQS for ozone (the 1997 Ozone NAAQS) should be revised. Because the comment does not relate to EPA's proposed determination that the Parkersburg-Marietta, WV-OH and Wheeling, WV-OH nonattainment areas have attained the 1997 annual $PM_{2.5}$ NAAQS, it is not relevant to, and is beyond the scope of this rulemaking action.

IV. Final Action

EPA is finalizing the determinations that the Parkersburg-Marietta, WV-OH and Wheeling, WV-OH nonattainment areas have attained the 1997 annual $PM_{2.5}$ standard by the applicable attainment date (April 5, 2010). These actions meet the requirement pursuant to section 179(c) of the CAA for EPA to make a determination as to whether the Areas attained the standard by the applicable attainment date of April 5, 2010.

Finalizing these actions does not constitute a redesignation of the Areas to attainment of the 1997 annual $PM_{2.5}$ NAAQS under section 107(d)(3) of the CAA. Further, finalizing these determinations does not involve approving maintenance plans for the Areas as required under section 175A of the CAA, nor does it find that the Areas have met all other requirements for redesignation. The designation status of the Parkersburg-Marietta, WV-OH, and Wheeling, WV-OH areas remains nonattainment for the 1997 annual $PM_{2.5}$ NAAQS until such time as EPA determines that the Areas meet the CAA requirements for redesignation to attainment and EPA acts to redesignate the Parkersburg-Marietta, WV-OH, and Wheeling, WV-OH areas.

IV. Statutory and Executive Order Reviews

A. General Requirements

These actions merely make attainment determinations based on air quality data and does not impose any additional requirements. For that reason, this action:

- Is not a ''significant regulatory action'' subject to review by the Office of Management and Budget under Executive Order 12866 (58 FR 51735, October 4, 1993);
- Does not impose an information collection burden under the provisions of the Paperwork Reduction Act (44 U.S.C. 3501 *et seq.*);
- Is certified as not having a significant economic impact on a substantial number of small entities under the Regulatory Flexibility Act (5 U.S.C. 601 *et seq.*);
- Does not contain any unfunded mandate or significantly or uniquely affect small governments, as described in the Unfunded Mandates Reform Act of 1995 (Pub. L. 104–4);
- Does not have Federalism implications as specified in Executive Order 13132 (64 FR 43255, August 10, 1999);
- Is not an economically significant regulatory action based on health or safety risks subject to Executive Order 13045 (62 FR 19885, April 23, 1997);
- Is not a significant regulatory action subject to Executive Order 13211 (66 FR 28355, May 22, 2001);
- Is not subject to requirements of Section 12(d) of the National Technology Transfer and Advancement Act of 1995 (15 U.S.C. 272 note) because application of those requirements would be inconsistent with the CAA; and
- Does not provide EPA with the discretionary authority to address, as appropriate, disproportionate human health or environmental effects, using practicable and legally permissible methods, under Executive Order 12898 (59 FR 7629, February 16, 1994).

In addition, this rule does not have Tribal implications as specified by Executive Order 13175 (65 FR 67249, November 9, 2000), because the SIP is not approved to apply in Indian country located in the state, and EPA notes that it will not impose substantial direct costs on Tribal governments or preempt Tribal law.

B. Submission to Congress and the Comptroller General

The Congressional Review Act, 5 U.S.C. 801 *et seq.,* as added by the Small Business Regulatory Enforcement Fairness Act of 1996, generally provides that before a rule may take effect, the agency promulgating the rule must submit a rule report, which includes a copy of the rule, to each House of the Congress and to the Comptroller General of the United States. EPA will submit a report containing this action and other required information to the U.S. Senate, the U.S. House of Representatives, and the Comptroller General of the United States prior to publication of the rule in the **Federal Register.** A major rule cannot take effect until 60 days after it is published in the **Federal Register.**

This action is not a ''major rule'' as defined by 5 U.S.C. 804(2).

C. Petitions for Judicial Review

Under section 307(b)(1) of the CAA, petitions for judicial review of this action must be filed in the United States Court of Appeals for the appropriate circuit by January 31, 2012. Filing a petition for reconsideration by the Administrator of this final rule does not affect the finality of this action for the purposes of judicial review nor does it extend the time within which a petition for judicial review may be filed, and shall not postpone the effectiveness of such rule or action. This action pertaining to the determinations of attainment for the Parkersburg-Marietta, WV-OH and the Wheeling, WV-OH $PM_{2.5}$ nonattainment areas may not be challenged later in proceedings to enforce its requirements. (See section 307(b)(2).)

List of Subjects in 40 CFR part 52

Environmental protection, Air pollution control, Incorporation by reference, Intergovernmental relations, Particulate matter, Reporting and recordkeeping requirements.

Dated: September 27, 2011.

W.C. Early,

Acting Regional Administrator, Region 3.

Dated: October 18, 2011.

Susan Hedman,

Regional Administrator, Region 5.

40 CFR part 52 is amended as follows:

PART 52—[AMENDED]

■ 1. The authority citation for part 52 continues to read as follows:

Authority: 42 U.S.C. 7401 *et seq.*

Subpart KK—Ohio

■ 2. Section 52.1892 is amended by adding paragraph (d) to read as follows:

§ 52.1892 Determinations of attainment.

* * * * *

(d) Based upon EPA's review of the air quality data for the 3-year period 2007 to 2009, EPA determined that the Parkersburg-Marietta, WV-OH and Wheeling, WV-OH fine particle ($PM_{2.5}$) nonattainment areas attained the 1997 annual $PM_{2.5}$ National Ambient Air Quality Standard (NAAQS) by the applicable attainment date of April 5, 2010. Therefore, EPA has met the requirement pursuant to CAA section 179(c) to determine, based on the areas' air quality as of the attainment date, whether the areas attained the standard. EPA also determined that the Parkersburg-Marietta, WV-OH and Wheeling, WV-OH $PM_{2.5}$ nonattainment areas are not subject to the consequences of failing to attain pursuant to section 179(d).

Subpart XX—West Virginia

■ 3. Section 52.2527 is amended by adding paragraph (d) to read as follows:

§ 52.2527 Determinations of attainment.

* * * * *

(d) Based upon EPA's review of the air quality data for the 3-year period 2007 to 2009, EPA determined that the Parkersburg-Marietta, WV-OH and Wheeling, WV-OH fine particle ($PM_{2.5}$) nonattainment areas attained the 1997 annual $PM_{2.5}$ National Ambient Air Quality Standard (NAAQS) by the applicable attainment date of April 5, 2010. Therefore, EPA has met the requirement pursuant to CAA section 179(c) to determine, based on the areas' air quality as of the attainment date, whether the areas attained the standard. EPA also determined that the Parkersburg-Marietta, WV-OH and Wheeling, WV-OH $PM_{2.5}$ nonattainment areas are not subject to the consequences of failing to attain pursuant to section 179(d).

[FR Doc. 2011–30923 Filed 12–1–11; 8:45 am]

BILLING CODE 6560–50–P

ENVIRONMENTAL PROTECTION AGENCY

40 CFR Part 52

[EPA–R06–OAR–2010–0775; FRL–9496–8]

Approval and Promulgation of Air Quality Implementation Plans; Louisiana; Revisions To Control Volatile Organic Compound Emissions for Surface Coatings and Graphic Arts

AGENCY: Environmental Protection Agency (EPA).

ACTION: Final rule.

SUMMARY: EPA is approving State Implementation Plan (SIP) revisions for control of volatile organic compounds (VOCs) adopted by Louisiana on June 20, 2009 and August 20, 2010, and submitted to EPA on August 31, 2010. EPA is also approving, by parallel processing, a SIP revision for control of emission of organic compounds which was proposed by Louisiana on January 10, 2011 and adopted on April 20, 2011. EPA issued Control Techniques Guidelines (CTGs) in 2006, 2007 and 2008; Louisiana's rule revisions being approved in this action were developed in response to these CTGs. EPA is approving these revisions because they meet the requirements of Reasonably Available Control Technology (RACT) as set forth in the Clean Air Act (CAA) as well as the requirements of EPA's regulations, and they are consistent with EPA's guidance. This action is being taken under section 110 and part D of the CAA.

DATES: This final rule is effective on January 3, 2012.

ADDRESSES: EPA has established a docket for this action under Docket Identification No. EPA–R06–OAR–2010–0775. All documents in the docket are listed at *http://www.regulations.gov.* Although listed in the index, some information is not publicly available, *e.g.,* Confidential Business Information or other information whose disclosure is restricted by statute. Certain other material, such as copyrighted material, is not placed on the Internet and will be publicly available only in hard copy form. Publicly available docket materials are available either electronically through *www.regulations.gov* or in hard copy at the Air Planning Section (6PD–L), Environmental Protection Agency, 1445 Ross Avenue, Suite 700, Dallas, Texas 75202–2733. The file will be made available by appointment for public inspection in the Region 6 Freedom of Information Act (FOIA) Review Room between the hours of 8:30 a.m. and 4:30 p.m. weekdays except for legal holidays. Contact the person listed in the **FOR FURTHER INFORMATION CONTACT** paragraph below or Mr. Bill Deese at (214) 665–7253 to make an appointment. If possible, please make the appointment at least two working days in advance of your visit. There will be a 15 cent per page fee for making photocopies of documents. On the day of the visit, please check in at the EPA Region 6 reception area at 1445 Ross Avenue, Suite 700, Dallas, Texas.

FOR FURTHER INFORMATION CONTACT: Ms. Ellen Belk, Air Planning Section (6PD–L), Environmental Protection Agency, Region 6, 1445 Ross Avenue, Suite 700, Dallas, Texas 75202–2733, telephone (214) 665–2164; fax number (214) 665–7263; email address *belk.ellen@epa.gov.*

SUPPLEMENTARY INFORMATION: Throughout this document wherever ''we,'' ''us,'' or ''our'' is used, we mean the EPA.

Outline

I. What is the background for these actions?
II. What comments did we receive on the proposed rule?
III. What actions are we taking?
IV. Statutory and Executive Order Reviews

I. What is the background for these actions?

This action approves rules to implement measures in response to CTGs issued in 2006, 2007, and 2008. We are approving these revisions because they enhance the Louisiana SIP by improving control of emissions from VOC sources in Louisiana. These revisions reflect changes in response to CTGs issued in 2006, 2007 and 2008. These CTGs cover the following source categories: Consumer and Commercial Products Group II: Control Techniques Guidelines in Lieu of Regulations for Flexible Packaging Printing Materials, Lithographic Printing Materials, Letterpress Printing Materials, Industrial Cleaning Solvents, and Flat Wood Paneling Coatings (71 FR 58745, October 5, 2006); Consumer and Commercial Products: Control Techniques Guidelines in Lieu of Regulations for Paper, Film, and Foil Coatings; Metal Furniture Coatings; and Large Appliance Coatings (72 FR 57215, October 9, 2007); Consumer and Commercial Products, Group IV: Control Techniques Guidelines in Lieu of Regulations for Miscellaneous Metal Products Coatings, Plastic Parts Coatings, Auto and Light-Duty Truck Assembly Coatings, Fiberglass Boat Manufacturing Materials, and Miscellaneous Industrial Adhesives (73 FR 58481, October 7, 2008). These revisions include updates to the following Louisiana rules: Chapter 1 General Provisions, amendments to § 111 Definitions; Chapter 21 Control of Emission of Organic Compounds, amendments to § 2123 Organic Solvents, and § 2143 Graphic Arts (Printing) by Rotogravure, Flexographic, Offset Lithographic, Letterpress, and Flexible Package Printing Processes.

Also, this action finds that these revisions meet RACT requirements for the above source categories. These revisions meet statutory and regulatory requirements, and are consistent with EPA's guidance. EPA is approving these revisions pursuant to section 110 and part D of the CAA. For additional information, see our March 17, 2011, proposal (76 FR 14602).[1]

[1] We note that in our March 17, 2011 proposal, the summary of Louisiana's graphics arts regulations contains certain details which are not correct. The reference to applicability for the graphic arts rules should refer to § 2143. A. (rather than B.). Also, in East Baton Rouge, Iberville, Livingston, Pointe Coupee and West Baton Rouge parishes, the rules apply to any facility with the potential to emit a combined weight of VOCs greater than 25 tpy (rather than 50 tpy). The applicability in the rules is consistent with requirements for a severe nonattainment area. These inadvertent errors in the description of the Louisiana rules do not affect our decision to approve the rule revisions.

II. What comments did we receive on the proposed rule?

We received a comment letter from American Coatings Association on our proposed rulemaking. The comment letter was received by email and is available for review in the electronic docket for this rulemaking at the *regulations.gov* Web site (Docket No. EPA–R06–OAR–2010–0775). Our response to the comment letter is provided below.

Response to Comments

Comments: American Coatings Association (ACA) expressed concerns with the Pleasure Craft portion of the Control Techniques Guidelines (CTG) for Miscellaneous Metal and Plastic Parts Coatings, Group IV. The ACA objected to the limits the CTG recommended as being RACT for the Pleasure Craft coatings industry, and requested modifications to the VOC limits for three categories, changes to the definition of two categories, an additional specialty coating category, and an exemption. These requested changes are summarized as follows:

Finish Primer/Surfacer:
- Revised VOC Limit (from 420 g/L to 600 g/L).

Extreme High Gloss Coating
- Revised VOC Limit (from 490 g/L to 600 g/L).
- Revised Definition.

Other Substrate Anti-Foulant Coating:
- Revised VOC Limit (from 330 g/L to 400 g/L).

Anti-fouling Sealer/Tie Coat (new category):
- Additional Specialty Category and VOC Limit of 420 g/L.

Pre-Treatment Wash Primer:
- Revised Definition.

Small Container Exemption.

According to ACA, these revisions are necessary to meet customer expectations and continue to make the industry economically viable.

As mentioned above, the comment letter is available in the docket for this action.

Response: This rulemaking action is limited to approval of the state's official SIP submittal, submitted to us on August 31, 2010. Specifically, this action concerns whether the rules that LDEQ submitted to EPA to meet the requirements of section 182(b)(2)(A) of the CAA meet statutory and regulatory requirements. The state revised its *Miscellaneous Metal and Plastic Parts Coatings* regulations based on EPA's 2008 guidance titled ''Control Techniques Guidelines for Miscellaneous Metal Products Coatings and Plastic Parts Coatings.'' As explained in more detail in our proposal, EPA determined that the state's submitted revisions meet RACT requirements and are consistent with the 2008 guidance. The comments do not present evidence of why the requirements established in the State's submission are inconsistent with the RACT requirement of the Act and thus provide no basis for our disapproval of the State submission.

EPA must either approve or disapprove the state's submitted SIP revision pursuant to CAA section 110(k)(3), 42 U.S.C. 7407(k)(3). As a matter of law, EPA is required to approve a SIP revision if it meets the Act's requirements. EPA has no authority to modify the State's submission.

We note that issues similar to those raised by the Commenters have previously been raised to the Agency. In response to those concerns, EPA issued guidance that provides additional information regarding the pleasure craft industry in a memorandum from Stephen D. Page, Director, OAQPS, dated June 1, 2010, titled, ''Control Technique Guidelines for Miscellaneous metal and Plastic Part Coatings—Industry Request for Reconsideration.'' The Page memorandum provides additional information on how the Commenters' concerns can best be addressed. The memo, in part, states: ''After careful evaluation of the issues raised by the pleasure craft industry, OAQPS is recommending that the pleasure craft industry work with state agencies during their RACT rule development process to assess what is reasonable for the specific sources regulated because the CTG impose no legally binding requirements on any entity, including pleasure craft coating facilities * * *. The CTG are intended to provide state and local air pollution control authorities with information to assist them in determining RACT for VOC * * * States can use the recommendations from the MMPPC CTG to inform their own determination as to what constitutes RACT for VOC for pleasure craft coating operations in their particular nonattainment areas.'' (p. 3 of the June 1, 2010 Memo). In addition, we note that LDEQ considered similar comments from the Commenters prior to the adoption of this SIP package by the State on August 10, 2010 and provided those comments to us in its official SIP submittal. Those comments are a part of the state's official submittal, which is included in the docket for this rulemaking.

III. What actions are we taking?

EPA is approving SIP revisions for control of emission of volatile organic compounds (VOC) adopted by Louisiana on June 20, 2009, and August 20, 2010, and submitted to EPA as part of a larger submittal on August 31, 2010. These revisions were included as appendices to the second of three volumes submitted by the LDEQ in August 2010; these are Appendices A and B of the second volume, entitled ''VOC RACT Control Technique Guidelines''. We are also approving, by parallel processing, a revision for control of emission of VOC adopted on April 20, 2011, which is a small wording change. Together, these August 2010 and April 2011 revisions include updates to the following Louisiana rules: Chapter 1 General Provisions, amendments to § 111 Definitions; Chapter 21 Control of Emission of Organic Compounds, amendments to § 2123 Organic Solvents, and § 2143 Graphic Arts (Printing) by Rotogravure, Flexographic, Offset Lithographic, Letterpress, and Flexible Package Printing Processes.

We are approving these revisions as meeting the requirements of the CAA, including CAA section 182(b)(2)(A). These revisions reflect changes in response to CTGs issued in 2006, 2007 and 2008: Consumer and Commercial Products Group II: Control Techniques Guidelines in Lieu of Regulations for Flexible Packaging Printing Materials, Lithographic Printing Materials, Letterpress Printing Materials, Industrial Cleaning Solvents, and Flat Wood Paneling Coatings (71 FR 58745, October 5, 2006); Consumer and Commercial Products: Control Techniques Guidelines in Lieu of Regulations for Paper, Film, and Foil Coatings; Metal Furniture Coatings; and Large Appliance Coatings (72 FR 57215, October 9, 2007); Consumer and Commercial Products, Group IV: Control Techniques Guidelines in Lieu of Regulations for Miscellaneous Metal Products Coatings, Plastic Parts Coatings, Auto and Light-Duty Truck Assembly coatings, Fiberglass Boat Manufacturing Materials, and Miscellaneous Industrial Adhesives (73 FR 58481, October 7, 2008).

We have determined that these revisions meet the requirements of the CAA and our regulations, and that they are consistent with EPA's guidance. EPA is granting approval of these revisions pursuant to section 110 and part D of the CAA.

As previously mentioned, more information on the SIP revisions we are approving can be found in our proposal published in the March 17, 2011 **Federal Register** (76 FR 14602).

IV. Statutory and Executive Order Reviews

Under the Clean Air Act, the Administrator is required to approve a SIP submission that complies with the provisions of the Act and applicable Federal regulations. 42 U.S.C. 7410(k); 40 CFR 52.02(a). Thus, in reviewing SIP submissions, EPA's role is to approve state choices, provided that they meet the criteria of the Clean Air Act. Accordingly, this action merely approves state law as meeting Federal requirements and does not impose additional requirements beyond those imposed by state law. For that reason, this action:

- Is not a ''significant regulatory action'' subject to review by the Office of Management and Budget under Executive Order 12866 (58 FR 51735, October 4, 1993);
- Does not impose an information collection burden under the provisions of the Paperwork Reduction Act (44 U.S.C. 3501 *et seq.*);
- Is certified as not having a significant economic impact on a substantial number of small entities under the Regulatory Flexibility Act (5 U.S.C. 601 *et seq.*);
- Does not contain any unfunded mandate or significantly or uniquely affect small governments, as described in the Unfunded Mandates Reform Act of 1995 (Pub. L. 104–4);
- Does not have Federalism implications as specified in Executive Order 13132 (64 FR 43255, August 10, 1999);
- Is not an economically significant regulatory action based on health or safety risks subject to Executive Order 13045 (62 FR 19885, April 23, 1997);
- Is not a significant regulatory action subject to Executive Order 13211 (66 FR 28355, May 22, 2001);
- Is not subject to requirements of Section 12(d) of the National Technology Transfer and Advancement Act of 1995 (15 U.S.C. 272 note) because application of those requirements would be inconsistent with the Clean Air Act; and
- Does not provide EPA with the discretionary authority to address, as appropriate, disproportionate human health or environmental effects, using practicable and legally permissible methods, under Executive Order 12898 (59 FR 7629, February 16, 1994).

In addition, this rule does not have tribal implications as specified by Executive Order 13175 (65 FR 67249, November 9, 2000), because the SIP is not approved to apply in Indian country located in the state, and EPA notes that it will not impose substantial direct costs on tribal governments or preempt tribal law.

The Congressional Review Act, 5 U.S.C. 801 *et seq.,* as added by the Small Business Regulatory Enforcement Fairness Act of 1996, generally provides that before a rule may take effect, the agency promulgating the rule must submit a rule report, which includes a copy of the rule, to each House of the Congress and to the Comptroller General of the United States. EPA will submit a report containing this action and other required information to the U.S. Senate, the U.S. House of Representatives, and the Comptroller General of the United States prior to publication of the rule in the **Federal Register**. A major rule cannot take effect until 60 days after it is published in the **Federal Register**. This action is not a ''major rule'' as defined by 5 U.S.C. 804(2).

Under section 307(b)(1) of the Clean Air Act, petitions for judicial review of this action must be filed in the United States Court of Appeals for the appropriate circuit by January 31, 2012. Filing a petition for reconsideration by the Administrator of this final rule does not affect the finality of this action for the purposes of judicial review nor does it extend the time within which a petition for judicial review may be filed, and shall not postpone the effectiveness of such rule or action. This action may not be challenged later in proceedings to enforce its requirements. (See section 307(b)(2).)

List of Subjects in 40 CFR Part 52

Environmental protection, Air pollution control, Intergovernmental relations, Incorporation by reference, Nitrogen dioxides, Ozone, Particulate matter, Reporting and recordkeeping requirements, Volatile organic compounds.

Dated: November 7, 2011.

Al Armendariz,

Regional Administrator, Region 6.

40 CFR part 52 is amended as follows:

PART 52—[AMENDED]

■ 1. The authority citation for part 52 continues to read as follows:

Authority: 42 U.S.C. 7401 *et seq.*

Subpart T—Louisiana

■ 2. The table in § 52.970(c) entitled ''EPA Approved Louisiana Regulations in the Louisiana SIP'' is amended as follows:

■ a. Under Chapter 1, by adding a new entry for Section 111;

■ b. Under Chapter 21, Subchapter B, by adding a new entry for Section 2123;

■ c. Under Chapter 21, Subchapter H, by adding a new entry for Section 2143.

The additions read as follows:

§ 52.970 Identification of plan.

* * * * *

(c) * * *

EPA APPROVED LOUISIANA REGULATIONS IN THE LOUISIANA SIP

State citation	Title/subject	State approval date	EPA approval date	Comments
LAC Title 33. Environmental Quality Part III. Air				
Chapter 1—General Provisions				
*	*	*	*	*
Section 111	Definitions	8/20/2010	12/2/2011 [Insert *FR* page number where document begins].	Revisions to Section 111 approved in the Louisiana Register August 20, 2010 (LR 36:1773).
*	*	*	*	*
Chapter 21—Control of Emissions of Organic Compounds				
*	*	*	*	*
Subchapter B—Organic Solvents				
Section 2123	Organic Solvents	4/20/2011	12/2/2011 [Insert *FR* page number where document begins].	Revisions to Section 2123 approved in the Louisiana Register April 20, 2011 (LR 37:1150).
*	*	*	*	*
Subchapter H—Graphic Arts				
Section 2143	Graphic Arts (Printing) by Rotogravure and Flexographic Processes. Control Requirements.	6/20/2009	12/2/2011 [Insert *FR* page number where document begins].	Revisions to Section 2143 approved in the Louisiana Register June 20, 2009 (LR 35:1101).
*	*	*	*	*

[FR Doc. 2011–30924 Filed 12–1–11; 8:45 am]

BILLING CODE 6560–50–P

DEPARTMENT OF TRANSPORTATION

Pipeline and Hazardous Materials Safety Administration

49 CFR Part 177

[Docket No. PHMSA–2010–0227(HM–256A)]

RIN 2126–AB29

Federal Motor Carrier Safety Administration

49 CFR Parts 383, 384, 390, 391, and 392

[Docket No. FMCSA–2010–0096]

RIN 2137–AE65

Drivers of CMVs: Restricting the Use of Cellular Phones

AGENCIES: Federal Motor Carrier Safety Administration (FMCSA) and Pipeline and Hazardous Materials Safety Administration (PHMSA), DOT.

ACTION: Final rule.

SUMMARY: FMCSA and PHMSA are amending the Federal Motor Carrier Safety Regulations (FMCSRs) and the Hazardous Materials Regulations (HMR) to restrict the use of hand-held mobile telephones by drivers of commercial motor vehicles (CMVs). This rulemaking will improve safety on the Nation's highways by reducing the prevalence of distracted driving-related crashes, fatalities, and injuries involving drivers of CMVs. The Agencies also amend their regulations to implement new driver disqualification sanctions for drivers of CMVs who fail to comply with this Federal restriction and new driver disqualification sanctions for commercial driver's license (CDL) holders who have multiple convictions for violating a State or local law or ordinance on motor vehicle traffic control that restricts the use of hand-held mobile telephones. Additionally, motor carriers are prohibited from requiring or allowing drivers of CMVs to use hand-held mobile telephones.

DATES: This rule is effective January 3, 2012.

ADDRESSES: For access to the docket to read background documents, including those referenced in this document, or to read comments received, go to *http://www.regulations.gov* at any time and insert ''FMCSA–2010–0096'' or ''PHMSA–2010–0227'' in the ''Keyword'' box, and then click ''Search.'' You may also view the docket online by visiting the Docket Management Facility in Room W12–140, DOT Building, 1200 New Jersey Avenue SE., Washington, DC, between 9 a.m. and 5 p.m., e.t. Monday through Friday, except Federal holidays.

Anyone is able to search the electronic form for all comments received into any of our dockets by the name of the individual submitting the comment (or signing the comment, if submitted on behalf of an association, business, labor union, *etc.*). You may review the U.S. Department of Transportation's (DOT) complete Privacy Act Statement in the **Federal Register** published on January 17, 2008 (73 FR 3316), or you may visit *http://edocket.access.gpo.gov/2008/pdf/E8-785.pdf.*

FOR FURTHER INFORMATION CONTACT: If you have questions about this rule, contact Mr. Brian Routhier, Transportation Specialist, Federal Motor Carrier Safety Administration, Vehicle and Roadside Operation Division, at (202) 366–4325 or *FMCSA_MCPSV@dot.gov.* or contact Ben Supko, Sr. Regulations Officer, Standards and Rulemaking Division, Pipeline and Hazardous Materials Safety Administration, at (202) 366–8553.

SUPPLEMENTARY INFORMATION:

Table of Contents for Preamble

I. Abbreviations
II. Background
A. Rationale for the Rule
B. Legal Authority
III. Discussion of Comments
A. FMCSA Comments
B. PHMSA Comments
IV. Discussion of the Rule
V. Regulatory Analyses

I. Abbreviations

ABA American Bus Association
Advocates Advocates for Highway and Auto Safety
AMSA American Moving and Storage Association
API American Petroleum Institute
ATA American Trucking Associations, Inc.
CDL Commercial Driver's License
CMV Commercial Motor Vehicle
DOT United States Department of Transportation
EA Environmental Assessment
EIS Environmental Impact Statement
EOBR Electronic On-Board Recorder
FCC Federal Communications Commission
FMCSA Federal Motor Carrier Safety Administration
FMCSRs Federal Motor Carrier Safety Regulations
FONSI Finding of No Significant Impact
FR Federal Register
FRA Federal Railroad Administration
MCSAC Motor Carrier Safety Advisory Committee
MCSAP Motor Carrier Safety Assistance Program
NAICS North American Industry Classification System
NHTSA National Highway Traffic Safety Administration
NPRM Notice of Proposed Rulemaking
NSC National Safety Council
NTSB National Transportation Safety Board
OOIDA Owner-Operator Independent Drivers Association
OMB Office of Management and Budget
PAR Population Attributable Risk
PHMSA Pipeline and Hazardous Materials Safety Administration
PU Power Unit
UMA United Motorcoach Association
VTTI Virginia Tech Transportation Institute

II. Background

FMCSA—On December 21, 2010, FMCSA published a notice of proposed rulemaking (NPRM) in the **Federal Register** (75 FR 80014), proposing to restrict the use of hand-held mobile telephones by interstate CMV drivers. FMCSA received nearly 300 public comments to the NPRM. The Agency made changes to the proposed rule in response to these comments, which are described below in part IV, Discussion of the Rule.

PHMSA—On April 29, 2011, PHMSA published a NPRM in the **Federal Register** (76 FR 23923), proposing to restrict the use of hand-held mobile telephones by drivers of CMVs containing a quantity of hazardous materials requiring placarding under part 172 of 49 CFR or any quantity of a select agent or toxin listed in 42 CFR part 73. PHMSA received six public comments, which are also described below in part IV, Discussion of the Rule.

A. Rationale for the Rule

Driver distraction can be defined as the voluntary or involuntary diversion of attention from primary driving tasks due to an object, event, or person. Researchers classify distraction into several categories: visual (taking one's eyes off the road), manual (taking one's hands off the wheel), cognitive (thinking about something other than the road/driving), and auditory (listening to the radio or someone talking). Research shows that using a hand-held mobile telephone while driving may pose a higher safety risk than other activities (*e.g.,* eating or adjusting an instrument) because it involves all four types of driver distraction. Both reaching for and dialing a hand-held mobile telephone are manual distractions and require visual distraction to complete the task; therefore, the driver may not be capable of safely operating the vehicle.

Using a hand-held mobile telephone may reduce a driver's situational awareness, decision making, or performance; and it may result in a crash, near-crash, unintended lane departure by the driver, or other unsafe driving action. Indeed, research indicates that reaching for and dialing hand-held mobile telephones are sources of driver distraction that pose a specific safety risk. To address the risk associated with these activities, the Agencies restrict CMV drivers' use of hand-held mobile telephones, which includes ''using at least one hand to hold a mobile telephone to conduct a voice communication.'' As discussed below, while operating a CMV, the driver may only use a compliant mobile telephone, such as a hands free mobile phone, to conduct a voice communication.

In an effort to understand and mitigate crashes associated with driver distraction, the U.S. Department of Transportation (DOT) conducted research concerning behavioral and vehicle safety countermeasures to driver distraction. Data from studies [1] indicate that both reaching for and dialing a mobile telephone increase the odds of a CMV driver's involvement in a safety-critical event, such as a crash, near crash, or unintended lane departure.[2]

[1] Olson, R.L., Hanowski, R.J., Hickman, J.S., & Bocanegra, J. (2009), *Driver distraction in commercial vehicle operations,* (Document No. FMCSA–RRR–09–042) Washington, DC: Federal Motor Carrier Safety Administration. The study is in the docket at #FMCSA–2010–0096–0016. Hickman, J., Hanowski, R. & Bocanegra, J. (2010), *Distraction in commercial trucks and buses: assessing prevalence and risk in conjunction with crashes and near- crashes,* (Document No. FMCSA–RRR–10–049) Washington, DC: Federal Motor Carrier Safety Administration. The study is in the docket at #FMCSA–2010–0096–0004.

[2] In popular usage, mobile telephones are often referred to as ''cell phones.'' As explained later in the final rule, a variety of different technologies are licensed by the Federal Communications Commission (FCC) (47 CFR 20.3) to provide mobile telephone services; thus, the rule here would apply

Continued

The odds of being involved in a safety-critical event are three times greater when the driver is reaching for an object than when the driver is not reaching for an object. The odds of being involved in a safety-critical event are six times greater while the driver is dialing a cell phone than when the driver is not dialing a cell phone. These increases in risk are primarily attributable to the driver's eyes being off the forward roadway. Additionally, these activities have high population attributable risk (PAR) percentages. PAR percent is the percent of the drivers involved in a safety critical event that would not occur if performing the task while driving were eliminated. Tasks that are performed more frequently have a higher PAR percentage. The highest PAR percentage in the study was 7.6 percent—reaching for an object, including cell phones. Dialing a cell phone had a PAR of 2.5. Because of the data on distractions associated with the use of hand-held mobile telephones while driving [3](*i.e.* reaching for and dialing a mobile telephone), FMCSA and PHMSA believe it is in the best interest of public safety to restrict a CMV driver's use of such devices.

The National Transportation Safety Board (NTSB) determined that one probable cause of a November 2004 bus crash was the use of a hands-free cell phone. This crash was the impetus for an NTSB investigation (NTSB/HAR–06/04 PB2007–916201) and a subsequent recommendation to FMCSA that the Agency prohibit cell phone use by all passenger-carrying CMVs.[4] FMCSA also received recommendations on cell phone use from its Motor Carrier Safety Advisory Committee (MCSAC). One of MCSAC's recommendations for the National Agenda for Motor Carrier Safety was that FMCSA initiate a rulemaking to ban a driver's use of hand-held and hands-free mobile telephones while operating a CMV.

It is not clear, however, if simply talking on a mobile telephone presents a significant risk while driving. For example, Olson, *et al.* (2009) detailed the risks of reaching for and dialing a phone while driving and found that ''talking or listening to a hands-free phone'' and ''talking or listening to a hand-held phone'' were relatively low-risk activities that involved only brief periods of eyes off the forward roadway. FMCSA and PHMSA determine that it is the action of taking one's eyes off the forward roadway to reach for and dial a hand-held mobile telephone [5] (two high PAR activities) that has the greatest risk. The Agencies address those risky behaviors by restricting holding mobile telephones while driving a CMV.

While no State has completely banned mobile telephone use, some States have gone further than this rule for certain categories of drivers. For example, 19 States and the District of Columbia prohibit the use of all mobile telephones while driving a school bus. Additionally, nine States and the District of Columbia have traffic laws prohibiting all motor vehicle drivers from using a hand-held mobile telephone while driving. Transit bus and motorcoach drivers are the focus of stricter mobile telephone rules in some States and local jurisdictions.[6] The restriction of hand-held mobile telephone use by all CMV drivers is based on available data and in line with existing regulations that hold CMV drivers to higher standards.[7]

Distracted Driving Summit

The information and feedback DOT received during its first Distracted Driving Summit, held September 30–October 1, 2009, in Washington, DC, highlighted the need for action and demonstrated widespread support for a ban against texting and mobile telephone use while driving. Summit participants, who included industry representatives, safety experts, elected officials, and law enforcement, gathered to address the safety risk posed by this growing problem across all modes of surface transportation. U.S. Transportation Secretary Ray LaHood stated: ''Keeping Americans safe is without question the Federal government's highest priority.'' The Secretary pledged to work with Congress to ensure that the issue of distracted driving would be appropriately addressed.[8] At the conclusion of the Summit, the Secretary announced a series of concrete actions that the Obama Administration and DOT would be taking to address distracted driving.

B. Legal Authority

FMCSA

The authority for this rule derives from the Motor Carrier Safety Act of 1984 (1984 Act), 49 U.S.C. chapter 311, and the Commercial Motor Vehicle Safety Act of 1986 (1986 Act), 49 U.S.C. chapter 313. The 1984 Act (Pub. L. 98–554, Title II, 98 Stat. 2832, Oct. 30, 1984) provides authority to regulate the safety of operations of CMV drivers, motor carriers, and vehicle equipment. It requires the Secretary of Transportation (Secretary) to ''prescribe regulations on commercial motor vehicle safety. The regulations shall prescribe minimum safety standards for commercial motor vehicles.'' Although this authority is very broad, the 1984 Act also includes specific requirements in 49 U.S.C. 31136(a):

> At a minimum, the regulations shall ensure that—(1) commercial motor vehicles are maintained, equipped, loaded, and operated safely; (2) the responsibilities imposed on operators of commercial motor vehicles do not impair their ability to operate the vehicles safely; (3) the physical condition of operators of commercial motor vehicles is adequate to enable them to operate the vehicles safely; and (4) the operation of commercial motor vehicles does not have a deleterious effect on the physical condition of the operators.

This rule is based primarily on 49 U.S.C. 31136(a)(1), which requires regulations that ensure that CMVs are operated safely, and secondarily on section 31136(a)(2), to the extent that drivers' use of hand-held mobile telephones impacts their ability to operate CMVs safely. It does not address the physical condition of drivers (49 U.S.C. 31136(a)(3)), nor does it impact any physical effects caused by operating CMVs (49 U.S.C. 31136(a)(4)).

The relevant provisions of the FMCSRs (49 CFR subtitle B, chapter III, subchapter B) apply to CMV drivers and employers operating CMVs included in

to the range of technologies used to provide wireless telephone communications and the rule uses the broader term ''mobile telephones.'' However, some of the materials discussed in this preamble use the popular term ''cell phone,'' and the discussion continues that usage in such cases as appropriate.

[3] As discussed under part II.B, the legal authority supporting the two regulatory programs of FMCSA and PHMSA differs. FMCSA's authority to adopt the FMCSRs applies to CMV drivers who operate in interstate commerce. PHMSA's authority to adopt the HMRs extends to CMV drivers who operate in intrastate commerce as well.

[4] NTSB (2006). *Motorcoach collision with the Alexandria Avenue Bridge overpass, George Washington Memorial Parkway, Alexandria, Virginia, November 14, 2004* (Highway Accident Report NTSB/HAR–06/04; NTIS report number PB2007–916201). Retrieved May 16, 2011, from: *http://www.ntsb.gov/Publictn/2006/HAR0604.pdf.*

[5] The concept of ''holding'' is included in our definition of ''use a hand-held mobile telephone.''

[6] Insurance Institute for Highway Safety list of cellphone laws. Retrieved June 20, 2011, from *http://www.iihs.org/laws/cellphonelaws.aspx.*

[7] See 49 CFR 392.2, Applicable operating rules, which states that every commercial motor vehicle must be operated in accordance with the laws, ordinances, and regulations of the jurisdiction in which it is being operated. However, if a regulation of the Federal Motor Carrier Safety Administration imposes a higher standard of care than that law, ordinance or regulation, the Federal Motor Carrier Safety Administration regulation must be complied with.

[8] DOT (Oct. 1, 2009). *U.S. Transportation Secretary Ray LaHood Announces Administration-Wide Effort to Combat Distracted Driving* (DOT 156–09). Retrieved May 16, 2011, from: *http://www.dot.gov/affairs/2009/dot15609.htm.*

the statutory authority of the 1984 Act. The 1984 Act defines a CMV as a self-propelled or towed vehicle used on the highways to transport persons or property in interstate commerce; and that either: (1) Has a gross vehicle weight/gross vehicle weight rating of 10,001 pounds or greater; (2) is designed or used to transport more than 8 passengers (including the driver) for compensation; (3) is designed or used to transport more than 15 passengers, not for compensation; or (4) is transporting any quantity of hazardous materials requiring placards to be displayed on the vehicle (49 U.S.C. 31132(1)). All drivers operating CMVs are subject to the FMCSRs, except those who are employed by Federal, State, or local governments (49 U.S.C. 31132(2)).

In addition to the statutory exemption for government employees, there are several regulatory exemptions in the FMCSRs that are authorized under the 1984 Act, including, among others, one for school bus operations and one for CMVs designed or used to transport between 9 and 15 passengers (including the driver) not for direct compensation (49 CFR 390.3(f)(1) and (6)). The school bus operations exemption only applies to interstate transportation of school children and/or school personnel between home and school. This particular exemption is not based on any statutory provisions, but is instead a discretionary rule promulgated by the Agency. Therefore, FMCSA has authority to modify the exemption. Modification of the school bus operations exemption requires the Agency to find that such action ''is necessary for public safety, considering all laws of the United States and States applicable to school buses'' (former 49 U.S.C. 31136(e)(1)).[9] FMCSA also has authority to modify the non-statutory exemption for small, passenger-carrying vehicles not for direct compensation, but is not required to comply with former 49 U.S.C. 31136(e) in modifying that exemption.[10] FMCSA applies restrictions on hand-held mobile telephone use to both school bus operations by private operators in interstate commerce and small passenger-carrying vehicles not for direct compensation, although they will continue to be exempt from the rest of the FMCSRs. Other than transportation covered by statutory exemptions, FMCSA has authority to restrict the use of mobile telephones by drivers operating CMVs.

Any violation of this restriction may result in a civil penalty imposed on drivers in an amount up to $2,750; a civil penalty may be imposed on employers, who fail to require their drivers to comply with FMCSRs, in an amount up to $11,000 (49 U.S.C. 521(b)(2)(A), 49 CFR 386.81 and Appendix B, paragraphs (a)(3) and (4)). Disqualification of a CMV driver for violations of the Act and its regulations is also within the scope of the Agency's authority under the 1984 Act. Such disqualifications are specified by regulation for other violations (49 CFR 391.15), and were recently adopted by the Agency in its final rule prohibiting texting by CMV drivers while operating in interstate commerce (75 FR 59118, Sept. 27, 2010; 49 CFR 392.80). In summary, both a restriction on the use of hand-held mobile telephones and associated sanctions, including civil penalties and disqualifications, are authorized by statute and regulation for operators of CMVs, as defined above, in interstate commerce, with limited exceptions. But before prescribing any regulations under the 1984 Act, FMCSA must consider their costs and benefits (49 U.S.C. 31136(c)(2)(A)). See Part V, Regulatory Analysis.

The 1986 Act (Title XII of Pub. L. 99–570, 100 Stat. 3207–170, Oct. 27, 1986), which authorized creation of the CDL program, is the primary basis for licensing programs for certain large CMVs. There are several key distinctions between the authority conferred under the 1984 Act and that under the 1986 Act. First, the CMV for which a CDL is required is defined under the 1986 Act, in part, as a motor vehicle operating ''in commerce,'' a term separately defined to cover broadly both interstate commerce and operations that ''affect'' interstate commerce (49 U.S.C. 31301(2) and (4)). Also under the 1986 Act, a CMV means a motor vehicle used in commerce to transport passengers or property that: (1) Has a gross vehicle weight/gross vehicle weight rating of 26,001 pounds or greater; (2) is designed to transport 16 or more passengers including the driver; or (3) is used to transport certain quantities of ''hazardous materials,'' as defined in 49 CFR 383.5 (49 U.S.C. 31301(4)). In addition, a provision in the FMCSRs implementing the 1986 Act recognizes that all school bus drivers (whether government employees or not) and other government employees operating vehicles requiring a CDL (*i.e.,* vehicles above 26,000 pounds, in most States, or designed to transport 16 or more passengers) are subject to the CDL standards set forth in 49 CFR 383.3(b).

There are several statutory and regulatory exceptions from the CDL requirements, which include the following individuals: military service members who operate a CMV for military purposes (a mandatory exemption for the States to follow) (49 CFR 383.3(c)); certain farmers; firefighters; CMV drivers employed by a unit of local government for the purpose of snow/ice removal; and persons operating a CMV for emergency response activities (all of which are permissive exemptions for the States to implement at their discretion) (49 CFR 383.3(d)). States may also issue certain restricted CDLs to other categories of drivers under 49 CFR 383.3(e)–(g). Drivers with restricted CDLs based on State programs may still be covered by a disqualification under the 1986 Act arising from the use of hand-held mobile telephones while operating CMVs.

The 1986 Act does not expressly authorize the Agency to adopt regulations governing the safety of CMVs operated by drivers required to obtain a CDL. Most of these drivers (those involved in interstate trade, traffic, or transportation) are subject to safety regulations under the 1984 Act, as described above. The 1986 Act, however, does authorize disqualification of CDL drivers by the Secretary. It contains specific authority to disqualify CDL drivers for various types of offenses, whether those offenses occur in interstate or intrastate commerce. This authority exists even if drivers are operating a CMV illegally because they did not obtain a CDL.

In general, the 1986 Act explicitly identifies several ''serious traffic violations'' as grounds for disqualification (49 U.S.C. 31301(12) and 31310). In addition to the specifically enumerated ''serious traffic violations,'' the 1986 Act provides related authority that allows FMCSA to

[9] Former section 31136(e)(1) was amended by section 4007(c) of the Transportation Equity Act for the 21st Century, Pub. L. 105–178, 112 Stat. 107, 403 (June 9, 1998) (TEA–21). However, TEA–21 also provides that the amendments made by section 4007(c) ''shall not apply to or otherwise affect a waiver, exemption, or pilot program in effect on the day before the date of enactment of [TEA–21] under * * * section 31136(e) of title 49, United States Code.'' (Section 4007(d), TEA–21, 112 Stat. 404 (set out as a note under 49 U.S.C. 31136)). The exemption for school bus operations in 49 CFR 390.3(f)(1) became effective on November 15, 1988, and was adopted pursuant to section 206(f) of the 1984 Act, later codified as section 31136(e) (*Federal Motor Carrier Safety Regulations; General,* 53 FR 18042–18043, 18053 (May 19, 1988) and section 1(e), Public Law 103–272, 108 Stat 1003 (July 5, 1994)). Therefore, any action by FMCSA affecting the school bus operations exemption would require the Agency to comply with former section 31136(e)(1).

[10] The exemption in 49 CFR 390.3(f)(6) was not adopted until 2003, after the enactment of TEA–21, in a final rule titled, ''*Safety Requirements for Operators of Small Passenger-Carrying Commercial Motor Vehicles Used In Interstate Commerce'' (68 FR 47860, Aug. 12, 2003).*

designate additional serious traffic violations by rulemaking if the underlying offense is based on the CDL driver committing a violation of a ''State or local law on motor vehicle traffic control'' (49 U.S.C. 31301(12)(G)). The FMCSRs state, however, that unless and until a CDL driver is convicted of the requisite number of specified offenses within a certain time frame (described below), the required disqualification may not be applied (49 CFR 383.5 (defining ''conviction'' and ''serious traffic violation'') and 383.51(c)).

Under the statute, a driver who commits two serious traffic violations in a 3-year period while operating a CMV must be disqualified from operating a CMV that requires a CDL for at least 60 days (49 U.S.C. 31310(e)(1)). A driver who commits three or more serious traffic violations in a 3-year period while operating a CMV must be disqualified from operating a CMV that requires a CDL for at least 120 days (49 U.S.C. 31310(e)(2)). Because use of hand-held mobile telephones results in distracted driving and increases the risk of CMV crashes, fatalities, and injuries, FMCSA is now requiring that violations by a CDL driver of a State or local law or ordinance on motor vehicle traffic control that restricts the use of such mobile telephones while driving CMVs should result in a disqualification under this provision.

FMCSA is authorized to carry out these statutory provisions by delegation from the Secretary as provided in 49 CFR 1.73(e) and (g).

PHMSA

PHMSA's Office of Hazardous Materials Safety is the Federal safety authority for the transportation of hazardous materials by air, rail, highway, and water. Under the Federal hazardous materials transportation law (Federal hazmat law; 49 U.S.C. 5101 *et seq.*), the Secretary of Transportation is charged with protecting the nation against the risks to life, property, and the environment that are inherent in the commercial transportation of hazardous materials. The Hazardous Materials Regulations (HMR; 49 CFR parts 171–180) are promulgated under the mandate in Section 5103(b) of Federal hazardous materials transportation law (Federal hazmat law; 49 U.S.C. 5101 *et seq.*) that the Secretary of Transportation ''prescribe regulations for the safe transportation, including security, of hazardous material in intrastate, interstate, and foreign commerce.'' Section 5103(b)(1)(B) provides that the HMR ''shall govern safety aspects, including security, of the transportation of hazardous material the Secretary considers appropriate.'' As such, PHMSA strives to reduce the risks inherent to the transportation of hazardous materials in both intrastate and interstate commerce. This final rule is being issued under the authority in 49 CFR part 106.

III. Discussion of Comments

FMCSA received approximately 300 comments in response to the NPRM (75 FR 80014, Dec. 21, 2010). PHMSA received 6 comments in response to its NPRM (76 FR 23923, April 29, 2011). The commenters included associations representing trucking companies, motorcoach companies, school bus operations, public transportation, highway safety, utility providers, waste haulers, concrete manufacturers, and food suppliers. In addition, the agencies received comments from the legal and law enforcement communities, as well as representatives of State governments and driver unions. Commenters from the general public included motorists concerned about their safety when driving near CMV drivers who are using mobile telephones.

Overall, most commenters supported the proposal to restrict hand-held mobile telephone use because of the potential safety benefits for all vehicle and pedestrian traffic sharing the highway with CMVs. A few commenters stated that the proposal did not go far enough and that all mobile telephone use by CMV drivers should be prohibited. A few commenters opposed any restriction on the use of mobile phones. Below we summarize the comments submitted to FMCSA's NPRM at Docket FMSCA–2010–0096, followed by a summary of the comments submitted to PHMSA's NPRM at Docket PHMSA–2010–0227.

A. FMCSA Comments

Hand-Held Restriction

Some commenters believed that restricting hand-held mobile telephone use by drivers operating CMVs in interstate commerce would impede business and require many more stops for drivers.

FMCSA Response. Because drivers have other options available that do not require pulling over and stopping, FMCSA disagrees that this rule would impede business. Stops can be avoided by using technological solutions such as a hands-free mobile telephone with a speaker phone function or a wired or wireless earphone. Most mobile telephones have a speaker phone function and one-touch dialing and thus would be compliant with this rule. Additionally, the Agency estimated the minimum cost of upgrading from a non-compliant mobile telephone to a compliant one to be as low as $29.99.[11] Therefore, abiding by the final rule will not create a burden on, or hardship for, CMV drivers.

Complete Mobile Telephone Ban

A few commenters, including First Group America[12] and the Advocates for Highway and Auto Safety (Advocates), thought the Agency should ban both hand-held and hands-free mobile telephone use.

FMCSA Response. The Agency does not believe sufficient data exist to justify a ban of both hand-held and hands-free use of mobile telephones by drivers operating CMVs in interstate commerce. Based on available studies, FMCSA proposed restricting only hand-held mobile telephone use by CMV drivers. While some driving simulator-based studies found conversation to be risky, the Olson, *et al.* (2009) and Hickman, *et al.* (2010) studies found that ''talking or listening to a hands-free phone'' and ''talking or listening to a hand-held phone'' were relatively low-risk activities and had only brief periods when the drivers' eyes were off the forward roadway. It is not clear from available studies if simply talking on a mobile telephone while driving presents a significant risk. The use of a cell phone, however, involves a variety of sub-tasks, some increasing and some decreasing the odds of involvement in a safety-critical event. The Hickman, *et al.* (2010) study showed that reaching for a cell phone while driving increased these odds by 3.7 times. Dialing a cell phone while driving increased the odds by 3.5 times. Reaching for a headset/earpiece while driving increased the odds by 3.4 times. Talking or listening on a hands-free cell phone while driving decreased the odds by .7 times (*i.e.,* protective effect). Talking/listening on a hand-held cell phone (odds ratios = .9) had a non-significant odds ratio (*i.e.,* no increase or decrease in risk).

Although talking on the cell phone did not show an increased risk, a driver must take several risk-increasing steps, such as reaching for and dialing the cell phone, in order to use the electronic device for conversation. Based on these studies, FMCSA determined that it is the action of taking one's eyes off the

[11] Upgrading is defined as the purchase of a mobile telephone that has voice dialing and speaker phone capabilities. The average cost of the least costly compliant phone is $29.99 (with a 2-year contract). See the Regulatory Evaluation accompanying this final rule for a full explanation of this cost.

[12] A North American surface transportation provider that includes school bus and transit services, as well as Greyhound Lines, Inc.

forward roadway to reach for and dial the mobile telephone that is the highly risky activity. Therefore, because the reaching and dialing tasks are necessary to use a hand-held mobile telephone, the Agency will only restrict hand-held mobile telephone use by CMV drivers while operating in interstate commerce in this final rule. Reaching for and dialing a mobile telephone are both visual and manual distractions and reduce a driver's situational awareness; adversely impact decision making or driving performance; and result in an increased risk of a crash, near-crash, unintended lane departure by the driver, or other unsafe driving action.[13] To address this risk, the Agency also restricts holding mobile telephones while driving a CMV.

FMCSA specifically asked commenters whether some CMV drivers (for example, drivers of passenger-carrying vehicles or those carrying hazardous materials) should be more restricted in their mobile telephone use than other CMV drivers. The Agency received a few responses on this issue and those commenters believed FMCSA should treat all CMV drivers equally.

Two-Way Radios and Push-to-Talk

Many commenters were concerned because the proposed rule prohibited the push-to-talk function of a mobile telephone. Some drivers use this function in lieu of a two-way radio. Commenters argued that the push-to-talk function is no different than that of a two-way or CB radio, neither of which were restricted by the proposed rule. One commenter stated that some school bus drivers need to use the push-to-talk function in lieu of actual two-way radio systems because it is their only means of communication. On the other hand, the National School Transportation Association commented that it supports allowing two-way radios, instead of the push-to-talk function, as two-way radios are commonly used in school bus operations.

Some specialized haulers commented that the Agency should provide a push-to-talk exception for specialized transports that use escorts in transporting certain loads (such as high weight or oversized items, often at low speed) because frequent communication is necessary between trucks and escort vehicles. The Maryland Motor Truck Association pointed out that Maryland passed a law on mobile telephone use with a push-to-talk exception.

FMCSA Response. In the NPRM, the Agency defined a mobile telephone as ''a mobile communication device that falls under or uses any commercial mobile radio service, as defined in regulations of the Federal Communications Commission (FCC), 47 CFR 20.3.'' FMCSA used the FCC's definition for ''mobile telephone'' in order to ensure consistency between the terms used in the FCC and FMCSA rules and to address emerging technologies. Because the push-to talk features use commercial mobile radio services to transmit and receive voice communications, the device is a mobile telephone; and it also requires the driver or user to hold it. Therefore, its use while driving a CMV is the same as that of a hand-held mobile telephone and is prohibited.

The push-to-talk feature of a mobile telephone can be replaced with the use of a compliant mobile telephone, two-way radios, or walkie-talkies for the short periods of time when communication is critical for utility providers, school bus operations, or specialty haulers. The use of CB and two-way radios and other electronic devices by CMV drivers for other functions is outside the scope of consideration in this rulemaking.

Dialing/Button Touches

A number of commenters objected to the way the Agency used the term ''dial,'' and offered alternative suggestions. Werner Enterprises stated that the word ''dial'' used in the definition was archaic, as it could include voice or speed dialing as it is currently written. Some commenters said the Agency should differentiate between dialing and a single button push to initiate or answer a call, either on the phone or the earpiece, or to enable voice-activated dialing. ATA commented that dialing should be defined as entering a 7 to 10 digit phone number because the rule should allow the driver to use 1 or 2 button pushes to initiate a conversation. Dart Transit stated that consideration should be given to allowing limited key strokes (fewer than four over a predetermined time frame) for technological interaction. The Maryland Motor Truck Association said that the current Maryland Motor Vehicle Law allows a driver to ''initiate or terminate a wireless telephone call or to turn on or turn off the hand-held telephone.''

FMCSA Response. In the NPRM, the Agency used the word dial in a general sense to indicate the placement of a call. Although the word dial originated with rotary dial phones, FMCSA acknowledges there are very few phones that still actually have such a feature. Such devices generally do not work on today's telecommunications network because they do not generate a digital tone for each number. The term ''dial'' is commonly used to mean ''make a telephone call,'' whether the task is accomplished by entering a 7 to 11 digit phone number or by voice activation or speed dialing. The Agency does not believe it is necessary to introduce another term or create a new term in place of the word ''dial.'' Thus, FMCSA will not use alternative terminology references for this definition.

If the Agency defined dial in a manner that permitted 3, 4, or even 10 touches or button presses, enforcement would be difficult. The amount of time the driver has his or her eyes off of the forward roadway is the fundamental issue, and the time required to identify and press any given number of buttons would vary from driver to driver. FMCSA, however, has added language to the regulatory text that allows the driver only minimal contact with the mobile telephone in order to conduct voice communication. A driver can initiate, answer, or terminate a call by touching a single button on a mobile telephone or on a headset. This action does not require the driver to take his or her eyes off of the forward roadway for an extended period—comparable to using vehicle controls or instrument panel functions, such as the radio or climate control system.

Using a Hand-Held Mobile Telephone/Clarifying Reaching

Many commenters requested that the Agency clarify the term ''reaching.'' The Owner- Operator Independent Drivers Association (OOIDA) noted that truck drivers safely reach for and press buttons or turn knobs to operate various equipment, including windshield wipers, temperature controls, radios, and CD players. The Snack Food Association, Southern Company, and the State of New York Department of Motor Vehicles commented that prohibiting reaching was ''too proscriptive'' or broad. The Alliance of Automobile Manufacturers said that this ''overly prescriptive'' regulatory wording would inhibit development of innovative technologies for the commercial vehicle fleet. One commenter suggested that drivers should be fined for holding the phone to their ear in lieu of establishing the prohibition based on the reaching task because it would be difficult to differentiate between reaching for other items in the cab and reaching for a mobile telephone. The State of New York Department of Motor Vehicles noted that the New York State Vehicle Traffic Law states that ''using (a phone)

[13] For further discussion, see the Research section of the NPRM (75 FR 80020).

shall mean holding a mobile telephone to, or in the immediate proximity of, the user's ear.'' The National Rural Electric Cooperative Association suggested allowing negligible movements to activate a hands-free mobile telephone. ATA recommended educating drivers to place hands-free devices within close proximity. A few commenters asked, why, if the radio, CB, and phone are all located within an easy arm's reach, the Agency is proposing to restrict only the use of hand-held mobile telephones.

FMCSA Response. FMCSA acknowledges commenters' concerns and revises the regulatory text to allow drivers to reach for the compliant mobile telephone (*i.e.,* hands-free) provided the device is within the driver's reach while he or she is in the normal seated position, with the seat belt fastened. This concept is a familiar one and found elsewhere in the FMCSRs. See, for example, 49 CFR 393.51 (certain CMVs must have an air pressure gauge ''visible to a person seated in the normal driving position.''). In addition, the Agency modeled its language on existing National Highway Traffic Safety Administration (NHTSA) rules. The NHTSA rules regarding the location of controls (49 CFR 571.101, S5.1.1) require certain controls, such as the hazard warning signal, windshield wiper, or climate control system, to be located so that they are operable by the driver when, ''[t]he driver is restrained by the seat belts installed in accordance with 49 CFR 571.208 (Standard No. 208; Occupant crash protection) and adjusted in accordance with the vehicle manufacturers' instructions'' (49 CFR 571.101, S5.6.2). These changes are reflected in the amended definition of ''use a hand-held mobile telephone'' in § 390.5.

If a compliant mobile telephone is close to the driver and operable while the driver is restrained by properly installed and adjusted seat belts, then the driver would not be considered to be reaching. Reaching for any mobile telephone on the passenger seat, under the driver's seat, or into the sleeper berth are not acceptable actions. To avoid committing a violation of this rule, the driver could use either a hands-free earpiece or the speaker function of a mobile telephone that is located close to the driver. Therefore, in order to comply with this rule, a driver must have his or her compliant mobile telephone located where the driver is able to initiate, answer, or terminate a call by touching a single button, for example, on the compliant mobile telephone or on a headset, when the driver is in the seated driving position and properly restrained by a seat belt.

While several commenters compared the use of hand-held mobile telephones to other electronic devices, arguing either for more comprehensive restrictions or against the regulation of hand-held mobile telephones, the use of other electronic devices by CMV drivers is outside the scope of this rulemaking.

Mounted or Stationary Mobile Telephones

Some drivers noted that they keep their phones in a bracket that allows them to answer and initiate calls without holding the mobile telephone. Some commenters questioned whether such mounted phones are acceptable.

FMCSA Response. Although the Agency did not address the option of mounting the mobile telephone in the NPRM, a compliant mobile telephone mounted close to the driver is an acceptable option, but it is not, however, required in order to be in compliance with the final rule. If a compliant mobile telephone is operated in accordance with this rule, mounted phones are no more distracting than operating the radio, climate control system, or other dash-mounted accessory in the vehicle.

Use of the Mobile Telephone While Idling

Some commenters, including the National Ready Mix Concrete Association, asked whether phone use would be allowed when the vehicle was parked, but with the engine running.

FMCSA Response. FMCSA removed the language ''with or without the motor running.'' Now the Agency states that ''driving'' means operating a commercial motor vehicle on a highway, including while temporarily stationary because of traffic, a traffic control device, or other momentary delays. Driving does not include operating a commercial motor vehicle when the driver has moved the vehicle to the side of, or off, a highway and has halted in a location where the vehicle can safely remain stationary. The Agency also revised the regulatory text to clarify that the restriction against using a hand-held mobile telephone applies when a CMV is operated ''on a highway.'' See 49 CFR 390.5 (definition of highway). The Agency believes this clarification addresses emerging technologies such as hybrid vehicles, which are operated at times without the motor running. Therefore, as long the ''driver has moved the vehicle to the side of, or off, a highway and has halted the vehicle in a location where it can safely remain stationary,'' use of the mobile telephone is allowed. Our new definition for ''driving'' is addressed in § 383.51 and explained in Part IV, Discussion of the Rule.

Uses of the Mobile Telephone for Other Than Voice Communication

Some commenters said they use their mobile telephones to enter the vehicle's odometer reading in the phone when crossing State lines and press the send button to create a time stamp. The American Moving and Storage Association (AMSA) and The Alliance of Automobile Manufacturers were concerned that the synchronizing of mobile telephones with other electronic devices would be affected by this rulemaking. Specifically, Alliance said that the definition of ''texting'' in § 383.5 should not be revised by removing the dialing exception in paragraph (2)(i). One commenter asked if text-to-voice and voice-to-text functions could be used under this rule.

FMCSA Response. Entering the vehicle odometer reading into a mobile telephone qualifies as texting (49 CFR 390.5) and, therefore, is already prohibited while driving (75 FR 59118, Sept. 27, 2010). Similarly, synchronizing EOBRs or other technologies with mobile telephones would require multiple steps that would result in a driver's eyes off forward roadway. This action should be accomplished when the vehicle is not moving, while safely parked off of the highway. If voice-to-text and text-to-voice functions can be initiated with a single button touch, such as is used to activate voice dialing, they are allowed.

In the definition of ''texting'' in §§ 383.5 and 390.5, the Agency included the exception for dialing in the texting rule to allow mobile telephone use until the time the Agency decided to address it through separate rulemaking concerning mobile telephones. Removing the dialing option in this rule limits the operator's ability to engage in unsafe, eyes-off-forward-roadway behavior.

The pairing of mobile telephones with in-vehicle technologies may be a violation of other restrictions or regulations. Regardless, the Agency believes a responsible driver would pair or link a mobile telephone to other technologies when the vehicle is stationary and not while he or she is operating a CMV on our Nation's highways.

Other Distractions

Many commenters, including OOIDA, questioned why other risky activities that may cause driver distraction were not addressed in this rule. Commenters asked if there would be future prohibitions on activities like reading,

operating radios and CBs, or eating. Some asked that global positioning systems (GPS) and dispatching devices be included in the prohibition. The National School Transportation Association cited its recommended policy that ''Drivers may not use a cell phone or other personal portable device while operating a school bus or any other vehicle transporting students * * *.'' Advocates believed that the Agency should extend the proposal to include other types of electronic devices and technologies that cause driver distraction; otherwise Advocates argued that the Agency's action is arbitrary and capricious.

FMCSA Response. Based on the data from the Olson, *et al.* (2009) study, the Agency is giving priority to addressing certain risky tasks. The Agency prohibited texting because it is associated with relatively high odds ratios and eyes-off-forward-roadway time. Similarly, both reaching for an object in the vehicle (such as a mobile telephone) and dialing a mobile telephone have significantly high odds ratios. Odds ratios are the odds of being involved in a safety critical event when performing a task compared to not performing that task. Although the OR for ''reach for an object in vehicle,'' is lower than the OR for ''dialing,'' the PAR for ''reach for an object in vehicle'' is the highest PAR in the study. The restriction of hand-held mobile telephone use, which the Agency is defining to include reaching for and dialing tasks, is a logical next step for the Agency in its efforts to prevent distracted driving because mobile telephones are increasingly popular. To address these risky activities, the Agency restricts the use of hand-held mobile telephones. FMCSA is considering an advance notice of proposed rulemaking to seek public comment on the extent to which regulatory action is needed to address other in-cab electronic devices that may result in distracted driving.

Constitutional Concerns

A few commenters raised constitutional concerns, namely whether the rule runs afoul of the Fourth or Fourteenth Amendment of the United States Constitution. Specifically, some commenters, including OOIDA, argued that FMCSA violated the Fourth Amendment because it failed to include an enforcement plan and procedural guidelines for its proposed cell phone rule. A professional driver argued that a regulation that restricts the use of hand-held cell phone devices by CMV drivers in interstate commerce violates the Equal Protection Clause of the Fourteenth Amendment because CMV drivers involved in intrastate commerce are *not* covered by the same proposal. In the alternative, the commenter requested that the U.S. Department of State engage in treaty negotiations with foreign nations to impose similar restrictions and penalties on them when operating CMVs in the United States.

FMCSA Response. The Fourth Amendment concerns raised by OOIDA are without merit. The regulation of the use of a mobile phone while operating a CMV does not constitute a ''search'' or ''seizure'' to which the Fourth Amendment applies. A driver could not successfully claim that observance of this conduct would violate a reasonable expectation of privacy. Cf *United States* v. *Knotts,* 460 U.S. 276 (1983). Nothing in the rule authorizes enforcement officers to require a driver to make a mobile telephone available so that the officer can review call history for purposes of enforcing this rule. It is the Agency's view that the rule may be enforced without raising Fourth Amendment concerns. Assuming that a Fourth Amendment argument might be raised in connection with the enforcement of the rule, given the government's interest in safety on public highways and the closely regulated nature of the commercial motor vehicle industry, it is FMCSA's view that a Fourth Amendment challenge is unlikely to be successful. Cf. *New York* v. *Burger,* 482 U.S. 691 (1987). In any event, the acquisition of evidence in a particular case will be governed by the principles established in judicial precedents interpreting and applying the Fourth Amendment and relevant statutory provisions, such as the Electronic Communications Privacy Act of 1986, Pub. L. 99–508, 100 Stat. 1848 (1986).

The commenter's Fourteenth Amendment argument is misplaced for several reasons. First, a classification distinguishing between interstate and intrastate commerce would be evaluated under a rational relationship test—a minimal level of scrutiny employed in equal protection analysis.

Second, as noted above, both the restriction on the use of hand-held mobile telephones and associated sanctions, including civil penalties and disqualifications, on operators of CMVs in interstate commerce are authorized by statute. While the commenter argued that FMCSA is ''segregating and punishing'' a certain group of people, Congress exercised its commerce clause powers under the Constitution in authorizing the Agency to regulate the safety of persons operating CMVs in interstate and foreign transportation. Although Congress could have gone further and authorized FMCSA to regulate the safety of transportation that ''affected'' interstate commerce (generally all intrastate transportation), it has made a rational decision not to give FMCSA that authority, though the Agency's MCSAP funding provides the FMCSA leverage to bring the States into conformity with FMCSA safety regulations. Clearly, Congress had a rational basis in the manner it prescribed the Agency's regulatory authority. Thus, FMCSA believes the Fourteenth Amendment argument is without merit.

In response to the commenter's alternative treaty negotiations argument, the Agency notes that Congress has given FMCSA authority to regulate the safety of foreign nationals operating CMVs within the territorial limits of the United States. See 49 U.S.C. 31132. The definition of ''interstate commerce'' in that statute covers transportation in the United States that is between a place in a State and ''a place outside the United States'' (49 U.S.C. 31132(4)). Accordingly, the rule would apply to CMV drivers from other countries who drive CMVs in the United States.

Fines/Driver Disqualification

Some commenters believed the civil penalties were too high. The United Transportation Union said there should be an appeals process for disqualifications.

FMCSA Response. The Agency rejects the view that the maximum penalties are too harsh. The applicable civil penalties for violations of this rule are provided by Congress and are consistent with current maximum penalties that can be assessed against an employer and driver for the violation of similar safety regulations. *See* 49 U.S.C. 521(b)(2); 49 CFR 386, Appendix B, paragraphs (a)(3) and (4). The actual penalty that might result in a proceeding under 49 CFR part 386 would take into account mitigating factors enumerated in 49 CFR 386.81. Driver and motor carrier fines ($2,750 and $11,000, respectively) in the rule are the recommended maximum that the Agency can assess on any violator. States, however, may choose to set the amount of a fine at or below those levels. Additionally, as noted above, civil penalties imposed under FMCSA regulations may be adjusted based on the circumstances of the violation.

In response to the United Transportation Union, FMCSA currently has an appeals process in place for disqualifications. If a driver obtains a ''letter of disqualification'' for violating the hand-held mobile telephone

restriction, he or she can either accept it or petition for review within 60 days after service of such action pursuant to 49 CFR 386.13. The petition must be submitted to FMCSA and must contain the following: (1) Identification of what action the petitioner wants overturned; (2) copies of all evidence upon which petitioner relies, in the form set out in § 386.49; (3) all legal and other arguments that the petitioner wishes to make in support of his/her position; (4) a request for oral hearing, if one is desired, which must set forth material factual issues believed to be in dispute; (5) certification that the reply has been filed in accordance with § 386.31; and (6) any other pertinent material.

Employer Liability

Some commenters stated that employers should not be held responsible for a driver's use of a hand-held mobile telephone. Others suggested that employers should be prohibited from calling drivers during work hours. Some commenters said that employers would be fined, instead of drivers, to increase revenue from a violation. The Snack Food Association commented that employer sanctions are inappropriate where an employer has a policy banning hand-held phone use already in place. ATA said that a motor carrier should not be deemed to have allowed hand-held phone use if they have taken good faith steps to ensure compliance. ATA, AMSA, and other commenters suggested the Agency add the word ''knowingly'' to § 392.82 so that it would read as follows: ''No motor carrier shall knowingly allow or require its drivers to use a hand-held mobile telephone while driving a CMV.''

FMCSA Response. FMCSA holds motor carriers accountable for the actions of their employees or drivers, especially when the employer allows or requires the prohibited action. In other words, the employer will generally be held accountable if the employee was doing his or her job, carrying out company business, or otherwise acting on the employer's behalf when the violation occurred.

FMCSA acknowledges the concern raised by industry representatives addressing employer liability for a driver's improper use of a hand-held mobile telephone. We recognize that there will be cases when a CMV driver uses a mobile telephone in violation of the employer's policy. The Agency, however, disagrees with the suggestion by some commenters that the word ''knowingly'' be added to the restriction in § 392.82(a)(2) that states ''no motor carrier shall allow or require its drivers to use a hand-held mobile telephone while driving a CMV.'' As noted above, a motor carrier should put in place or have company policies or practices that make it clear that a carrier does not allow or require hand-held mobile phone use while driving. A motor carrier is responsible for the actions of its drivers.

FMCSA reiterates that motor carriers and employers that allow or require their drivers to use a hand-held mobile telephone will be subject to civil penalties of up to $11,000, as already provided in 49 U.S.C. 521(b)(2)(A), 49 CFR 386.81, and Appendix B to 49 CFR part 386, paragraph (a)(3). A motor carrier must require drivers to observe a duty or prohibition imposed under the FMCSRs. See 49 CFR 390.11.

Enforcement

Several commenters said that enforcement will be difficult and highlighted the lack of enforcement of existing distracted driving laws. Several commenters worried about the mechanics of enforcement. Commenters' concerns related to challenges in law enforcement officers' might have in observing a CMV driver holding the mobile telephone, unless the driver were holding it to his or her ear. AMSA believed that the officer should be required to actually see the driver holding and/or dialing the phone before taking enforcement action.

FMCSA Response. FMCSA does not believe it is necessary to prescribe enforcement procedures and methodology in the rulemaking. The Agency and its State partners, through CVSA and its Training Committee, will develop the procedures and methods to ensure uniform application of the rule. Questions about specific enforcement procedures are not a basis for not taking action to restrict CMV drivers from using hand-held mobile telephones while operating in interstate commerce. The Agency notes, however, that enforcement programs can be successful. Since our texting rule was implemented, FMCSA has had over 300 violations at roadside.

Additionally, NHTSA, as part of its continuing effort to combat distracted driving, sponsored a pilot program in Hartford, Connecticut, and Syracuse, New York, which tested whether increased law enforcement efforts lead distracted drivers to put down their cell phones and focus on the road. During a year long pilot program in Hartford, police cited 9,500 drivers for talking on mobile telephones or texting while driving. Similar results were noted in Syracuse. Enforcement of this rule will involve a period of familiarization with the requirements for both Federal and State enforcement agencies. Therefore, FMCSA believes enforcement officials will be prepared to enforce the rule and be mindful of the factors needed to bring forward a case that would withstand legal challenges.

Research Methodology

Based on the available research, the United Motorcoach Association (UMA) felt that the Agency underestimated cognitive distraction and urged FMCSA to continue to study this issue. Advocates, NTSB, and a few other commenters suggested that research supports extending the Agency's prohibition to the hands-free operation of mobile telephones, as well as other electronic devices and technologies capable of causing distraction while driving. Advocates commented that the data in the Hickman, *et al.* (2010) study came from more safety conscious fleets during a period of elevated focus on the issue of distracted driving. They, therefore, felt that this data should be viewed cautiously since it likely represents a ''best case scenario'' population for study of distracted driving and may not accurately reflect real-world experience among the majority of commercial drivers who engage in hands-free mobile telephone conversations.

FMCSA Response. The Agency reviewed research on cognitive distraction and determined that existing research results vary. FMCSA did not receive any significant new research reports from the commenters that would influence our decision on this rule.

Hickman, *et al.* (2010) is the largest and most relevant study on distraction related to CMV drivers. In response to Advocates' comment on whether the fleets in the study represent a ''best case scenario'' population, the safety consciousness of a fleet could certainly influence the prevalence of tertiary tasks, but it would not influence the risk in performing these tasks while driving. Thus, we disagree with Advocates. The results of the study represent an accurate assessment of the risks associated with distracted driving regardless of the population used.

Emergencies

Some commenters thought that the NPRM prohibited CMV drivers from making emergency calls. Commenters believed that calls could *not* be made to law enforcement to report vehicle accidents, drunk drivers, or other roadside emergencies.

UMA noted that its members have largely responded to its advisory on the inherent risks of using cellular phones, and have developed and enforced

policies that direct drivers to restrict their use of cellular phones to emergency and security purposes only.

FMCSA Response. The Agency agrees with the UMA and the many companies whose cell-phone policies continue to allow the use of mobile telephones to contact law enforcement in cases of emergency and for security purposes. The Agency, however, did not propose to prohibit CMV drivers from placing emergency calls. In the NPRM, the Agency said in § 392.82: ''*Emergencies.* Using a hand-held mobile telephone is permissible by drivers of a CMV when necessary to communicate with law enforcement officials or other emergency services'' (75 FR 80033, Dec. 21, 2010). This final rule allows a CMV driver to use either a hand-held or hands-free mobile telephone to contact law enforcement or other emergency services for such purposes as reporting an accident or drunk driver.

Exceptions to the Hand-Held Ban

Some industries requested that their drivers be given a blanket exception to the restriction on using hand-held mobile telephones while operating CMVs in interstate commerce. For example, the National Rural Electric Cooperative Association, Southern Company, and other utility companies requested that their business operations be classified as emergency services. Specialty and heavyweight hauling operations, utility companies, and associations representing them also requested exemptions for their respective industries. The Minnesota Department of Transportation requested an exemption for their non-urban area formula transportation providers to allow hand-held mobile telephone use when communicating with other vehicle operators nearby, as well as with dispatch services.

FMCSA Response. Previous Agency decisions support the premise that the CMV operations of utility companies cannot be classified as emergency services.[14] They are subject to varying degrees of regulation by Federal, State, and local authorities and do not specifically deal with the protection of life and property. Public utility employees operate large or hazardous-material-laden vehicles both day and night throughout the year, sometimes under the most adverse weather conditions. During declarations of emergency, drivers may be eligible for exemptions from some regulations under 390.23.

Regarding the concerns of the Minnesota non-urban formula transportation program (which receives financial assistance under the Federal Transit Administration's formula grant program for other than urbanized areas in accordance with 49 U.S.C. 5311), if such service providers are State-owned, then the Federal hand-held mobile telephone restriction will not apply to them; but if the providers are contracted private transportation companies, they will be covered by the restriction. Regardless of whether operators are government-owned or private, the operators may use hands-free mobile telephone communication, including speakerphone or earphone functions, and still abide by the restriction on use of a hand-held phone while operating CMVs.

Accordingly, FMCSA is unable to conclude that granting an exception or waiver to these groups is necessary at this time.

Outreach

The Agency received several comments regarding outreach. Commenters suggested that early driver education is needed because young CMV drivers are operating their vehicles and are using their phones as if they were driving a car (*e.g.,* texting, dialing, *etc.*). Therefore, commenters recommended that the Agency require CDL schools to educate students on the dangers of cell phone use while driving CMVs.

FMCSA Response. The Agency agrees that enforcement and outreach efforts are essential to increase public awareness. Previous DOT campaigns, such as those addressing safety belt use and drinking and driving, have proven to reduce injuries and fatalities. DOT already has in place distracted driving campaigns to educate all vehicle drivers on distracted driving. The Agency believes that many of these efforts are reaching the CMV driver population, both experienced and new drivers. Platforms for sharing distracted driving information include the Web site, *http://www.Distraction.gov,* as well as outreach on radio and television, which have generally reduced unsafe driver behaviors and boosted compliance awareness.

For more information on research, outreach, and education, the reader may reference NHTSA's Driver Distraction Program. This program is a plan to communicate NHTSA's priorities to the public with regard to driver distraction safety challenges, focusing on the long-term goal of eliminating crashes that are attributable to distraction. The complete overview can be found at *http://www.distraction.gov/files/dot/6835_DriverDistractionPlan_4-14_v6_tag.pdf.* The Secretary considers preventing distracted driving a priority for the Department and has promoted funding for education, awareness, and outreach on this initiative.

Non-CMV Drivers

Many commenters suggested that a mobile telephone prohibition be applied to all vehicle drivers, including passenger car drivers, law enforcement, hazardous materials transporters, and government employees, among them publicly-employed school bus drivers.

FMCSA Response. The Agency does not have statutory authority to regulate non-CMV drivers. As noted above, other than transportation covered by statutory exemptions, FMCSA has authority to restrict the use of mobile telephones by drivers operating CMVs in interstate commerce.

Hand Off the Wheel

The New England Fuel Institute, Werner Enterprises, the Alliance of Automobile Manufacturers, and others commented on the language used in the NPRM preamble that stated: ''The Agency is proposing to allow hands-free mobile telephone use as long as it does not require the driver to reach for, dial, or hold a mobile telephone, taking the driver's eyes off the forward roadway and a hand off the wheel.'' The commenters felt that the Agency's use of the phrase ''a hand off the wheel'' was too restrictive and that it sounded as if FMCSA was implying that drivers maintain both hands on the wheel at all times.

FMCSA Response. The Agency understands that drivers often take a hand off the steering wheel to operate the many controls located in a CMV, including the many instrument panel functions, and to shift a manual transmission. It was not the intent of the Agency to prevent a driver from doing necessary tasks required to safely operate the vehicle. FMCSA has not repeated the referenced discussion in the final rule. This clarification will correct any misperception the previous discussion may have created.

Full Compliance

FMCSA received one comment regarding the analytical treatment of driver compliance in the Agency's Preliminary Regulatory Evaluation. The commenter argued that the Agency's assumption of 100 percent compliance overstates the potential benefits of the rule. The commenter further argued that

[14] See the Federal Highway Administration's Notice of Final Disposition entitled, ''Commercial Driver's License Program; Waivers; Final Disposition,'' at 53 FR 37313, Sept. 26, 1988.

monitoring and enforcing the rule would be problematic and imperfect, which would further make compliance inconsistent.

FMCSA Response. When FMCSA conducts regulatory evaluations for rulemakings, the Agency must establish a baseline for its analysis, which essentially describes the current state of the regulatory conditions involved. A baseline, according to the Office of Management and Budget (OMB) guidance, is ''the best assessment of the way the world would look absent the proposed regulation.'' [15]

The purpose of a regulatory evaluation is to provide decision makers with the estimated costs and benefits associated with the rule. Sometimes the goal of regulation is to correct a deficiency in existing rules manifested, for example, by excessive enforcement violations. In developing the regulatory evaluation, the Agency assumes complete compliance and attempts to show the impact of the provision once it is implemented. When estimating the costs and benefits of rules, the analysis must therefore assume complete (100%) compliance in its hypothetical depiction of various options. This approach creates an ''all things equal'' relationship between the multiple options within a given rule, as well as between the various rules.

Generally speaking, a reduction in compliance, theoretical or actual, reduces not only the associated benefits of a rule, but also the associated costs. Departures from the assumption of full compliance (an accounting of all costs and benefits) removes some costs and some benefits, and therefore, does not result in an overstatement of the potential benefits (or costs) of the rule.

Costs and Benefits

FMCSA received one comment concerning its estimation of costs and benefits in the Agency's Preliminary Regulatory Evaluation. Advocates argued that the FMCSA's cost/benefit analysis shows that the highest net benefit would result from adopting a cell phone restriction that applies to all commercial drivers and to both hand-held and hands-free use of cell phones. Advocates further stated that implementing the lower cost requirement in the final rule would be the better choice.

FMCSA Response. The FMCSA agrees with Advocates' comment that the Agency's cost/benefit analysis shows that the highest net benefit would result from adopting a complete cell phone ban for all CMV drivers. The commenters, however, did not recognize the distinction between a cost/benefit analysis and a threshold analysis, which are both used in the Agency's analysis for this rule. OMB recognizes that it will not always be possible to express in monetary units all of the important benefits and costs of rules. If the non-quantified benefits and costs are likely to be important, OMB guidance [16] requires that a threshold analysis be carried out in order to evaluate their significance. A threshold or a break-even analysis answers the question, ''how small could the value of the non-quantified benefits be (or how large would the value of the non-quantified costs need to be) before the rule would yield zero net benefits''?

The Agency is not required to choose the regulatory option with the highest net benefit. In the NPRM, FMCSA offered its preference for Option Four (a restriction on the use of hand-held mobile telephones by all interstate CMV drivers) because it minimizes (for an entire CMV population) the costs of restricting mobile telephone use, including costs associated with inconvenience, disruption of patterns of business operations, and stifling technological innovations. Furthermore, it is not clear whether talking on a mobile telephone presents a significant risk while driving.

In the final Regulatory Evaluation, the Agency recalculated the estimated costs in order to incorporate a more recent price of diesel fuel. The recalculation affected Options Two (a restriction on the use of all mobile telephones while operating a CMV for all interstate drivers) and Three (a restriction on the use of all mobile telephones while operating a passenger carrying CMV for all interstate drivers). The revised estimated net benefits of Option Two are negative.

B. PHMSA Comments

Security Concerns

PHMSA received one comment from the Chemical Facility Security News concerning the reporting of security incidents. The commenter was concerned that a ban on the use of cell phones may prevent drivers from reporting potential security threats while en route to their destination. The commenter noted that over the road truck drivers were one of the first groups that the Department of Homeland Security (DHS) targeted in its ''If You See Something, Say Something™'' Campaign. DHS recognized that truck drivers would be seeing many things in operation of their commercial vehicles that might be indicators of potential terrorist activities, including attempts at hijacking hazardous materials. The commenter recognizes that this rule would not stop those reports from being made, but would require the delay of those reports until the vehicle was parked off the roadway.

PHMSA Response. As noted above in the FMCSA response, this final rule allows a CMV driver to use either a hand-held or hands-free mobile telephone to contact law enforcement or other emergency services for such purposes as reporting potential terrorist activities, including attempts to hijack hazardous materials.

Complete Mobile Telephone Ban

A few commenters, including API, NTSB, and Advocates thought that PHMSA should ban both hand-held and hands-free mobile telephone use. The ATA strongly opposed banning of hands-free devices.

PHMSA Response. See FMCSA response above.

CB Radios

API also suggested that PHMSA ban the use of CB radios for drivers of CMVs. The commenter suggests adding regulatory language to include restricting the use of ''CB radios or other headset devices.''

PHMSA Response. The use of CB radios by CMV drivers is outside the scope of this rulemaking.

Employer Liability

ATA stated that employers should not be held responsible for a driver's use of a hand-held mobile telephone. ATA suggested the Agency add the word ''knowingly'' to § 392.82 so that it would read as follows: ''No motor carrier shall knowingly allow or require its drivers to use a hand-held mobile telephone while driving a CMV.''

PHMSA Response. See FMCSA response above.

Law Enforcement

Robert Baldwin is concerned that state police and other law enforcement officials will not be held to the same standard as CMV drivers.

PHMSA Response. The use of mobile communications devices by law enforcement officials is outside the scope of this rulemaking.

IV. Discussion of the Rule

This rule amends regulations in 49 CFR parts 177, pertaining to carriage of hazardous materials by public highway;

[15] OMB Circular A–4, Regulatory Analysis (09/17/2003), p. 11.

[16] Office of Management and Budget Circular A–4, Sept. 17, 2003, p. 2.

parts 383 and 384, concerning the Agency's CDL regulations; part 390, general applicability of the FMCSRs; part 391, driver qualifications and disqualifications; and part 392, driving rules. In general, this rule reduces the risks of distracted driving by restricting hand-held mobile telephone use by drivers who operate CMVs.

This rulemaking restricts a CMV driver from holding a mobile telephone to conduct a voice communication, dialing a mobile telephone by pressing more than a single button, or reaching for a mobile phone in an unacceptable and unsafe manner (*e.g.* reaching for any mobile telephone on the passenger seat, under the driver's seat, or into the sleeper berth). Thus, a driver of a CMV who desires to use a mobile phone while driving will need to use a compliant mobile telephone (such as hands-free) located in close proximity to the driver that can be operated in compliance with this rule. Thus, the ease of ''reach'' or accessibility of the phone is relevant only when a driver chooses to have access to a mobile telephone while driving. Essentially, the CMV driver must be ready to conduct a voice communication on a compliant mobile telephone, before driving the vehicle. The rule includes definitions related to the hand-held mobile telephone restriction.

The rule adds a driver disqualification provision for: (1) Interstate CMV drivers convicted of using a hand-held mobile telephone, and (2) CDL holders convicted of two or more serious traffic violations of State or local laws or ordinances on motor vehicle traffic control, including using a hand-held mobile telephone. The rule also requires interstate motor carriers to ensure compliance by their drivers with the restrictions on use of a hand-held mobile telephone while driving a CMV. Finally, the rule prohibits motor carriers and employers from requiring or allowing a CMV driver to use a hand-held mobile telephone while operating in interstate commerce.

There is a limited exception to the hand-held mobile telephone restriction. This exception allows CMV drivers to use their hand-held mobile telephones if necessary to communicate with law enforcement officials or other emergency services.

This rulemaking also amends the authority citations for 49 CFR parts 177, 383, 384, 390, 391, and 392 to correct statutory references and eliminate references that are either erroneous or unnecessary.

Section 177.804

PHMSA adds a new paragraph (c) to prohibit the use of hand-held mobile telephones by any CMV driver transporting a quantity of hazardous materials requiring placarding under Part 172 of the 49 CFR or any quantity of a material listed as a select agent or toxin in 42 CFR Part 73. As such, motor carriers and drivers who engage in the transportation of covered materials must comply with the distracted driving requirements in § 392.82 of the FMCSRs. This ensures that the FMCSA restriction on a driver's use of hand-held mobile telephones applies to both intrastate and interstate motor carriers operating CMVs as defined in 49 CFR 390.5.

Section 383.5

FMCSA adds a new definition for the term ''mobile telephone.'' The Agency adopts a definition of ''mobile telephone'' based on the FCC regulations to cover the multitude of devices that allow users to send or receive voice communication while driving. It identifies the type of activity that is restricted by this rule.

The definition of ''mobile telephone'' reflects the wide variety of radio telephone services, in addition to cell phone services, that are licensed by FCC and might be available for use in a CMV. ''Mobile telephone'' could include, for example, a satellite telephone service or a broadband radio service. Using such wireless communication services is just as distracting to a CMV driver as using a cell phone. FCC classifies these services as ''commercial mobile radio services,'' which are incorporated into the definition of mobile telephone. The FCC definition for mobile telephone does not include two-way or Citizens Band radio services.

To be consistent and to address commenters' concerns, FMCSA modified the existing definition of ''texting'' in 49 CFR 390.5 to reflect the Agency's restriction on a driver's use of a hand-held mobile telephone in this rule. FMCSA eliminated the dialing exception, as it would now be considered texting. Under the provisions implemented in this rule, the driver can press a single button to initiate or terminate a call. The Agency also removed the proposed definition of ''using a hand-held mobile telephone'' from § 383.5. Part 383 establishes the disqualification of CDL drivers that is defined by State or local law or ordinance on motor vehicle traffic control that restricts or prohibits the use of hand-held mobile telephones. In contrast, the Federal disqualification standards and definitions are contained in §§ 391.15 and 390.5.

Section 383.51

In Table 2 to 49 CFR 383.51, FMCSA adds a new serious traffic violation that would result in a CDL driver being disqualified. This serious traffic violation is a conviction for violating a State or local law or ordinance on motor vehicle traffic control restricting or prohibiting hand-held mobile telephone use while driving a CMV. The Agency modified the definition of ''driving'' in footnote 2, removing the phrase ''with the motor running'' and replacing it with ''on the highway'' (consistent with our definition of ''highway'' in 49 CFR 390.5), to clarify the scope of the restriction. The modified definition now reflects the use of hybrid vehicles on the highways, which can be operated without the motor running. Our definition for ''driving'' now reads as follows: ''*Driving, for the purpose of this disqualification,* means operating a commercial motor vehicle on a highway, including while temporarily stationary because of traffic, a traffic control device, or other momentary delays. Driving does not include operating a commercial motor vehicle when the driver has moved the vehicle to the side of, or off, a highway and has halted in a location where the vehicle can safely remain stationary.'' The Agency's decision to change the definition of driving is consistent with the provisions of 49 U.S.C. 31310(e), which indicates the serious traffic violation must occur while the driver is operating a CMV that requires a CDL; the operative provisions in the revised table 2 of § 383.51(c) limit the types of violations that could result in a disqualification accordingly.

States must disqualify a CDL driver whenever that driver is convicted of the triggering number of violations while operating in any State where such conduct is restricted or prohibited by a State or local law or ordinance on motor vehicle traffic control.

Section 384.301

Due to intervening amendments (76 FR 39019, July 5, 2011; 76 FR 68332, November 4, 2011), FMCSA redesignates proposed paragraph (f) as paragraph (h). It requires all States that issue CDLs to implement the new provisions in part 383 that relate to disqualifying CDL drivers for violating the new serious traffic violation of using a hand-held mobile telephone while driving a CMV. States are required to implement these provisions as soon as practical, but not later than 3 years after this rule is effective.

Section 390.3

FMCSA modifies several discretionary regulatory exemptions concerning the applicability of the existing FMCSRs, including one for school bus operations and one for CMVs designed or used to transport between 9 and 15 passengers (including the driver), not for direct compensation (49 CFR 390.3(f)(1) and (6)). The Agency finds that this action is necessary for public safety regarding school bus transportation by interstate motor carriers, a finding required by the applicable statutory provisions, as explained above in the legal authority section. In addition, the Agency determined that, in order to enhance public safety to the greatest extent possible, the rule will apply to the operation by drivers of small, passenger-carrying vehicles (designed to transport 9–15 passengers), not for direct compensation, who are otherwise exempt from most of the FMCSRs under 49 CFR 390.3(f)(6).

Section 390.5

FMCSA amends 49 CFR 390.5 by adding new definitions for the terms ''mobile telephone'' and ''use a hand-held mobile telephone,'' for general application. In this rulemaking, FMCSA defines ''use a hand-held mobile telephone'' to clarify that certain uses of a hand-held mobile telephone are restricted, including holding, dialing, and reaching in a proscribed manner for the mobile telephone to conduct voice communication. (That is, if a compliant mobile telephone is close to the driver and operable by the driver while restrained by properly installed and adjusted seat belts, then the driver would not be considered to be reaching. Reaching for any mobile telephone on the passenger seat, under the driver's seat, or into the sleeper berth are not acceptable actions.) As stated above in § 383.5, FMCSA also modified the definition of ''texting.''

FMCSA recognizes that mobile telephones often have multi-functional capability and is not prohibiting the use of mobile telephones for other uses. Of course, other types of activities using a mobile telephone might be covered by other rules, such as those addressing texting while driving a CMV.

Section 391.2

FMCSA amends 49 CFR 391.2, which provides certain exceptions to the requirements of part 391 for custom farm operations, apiarian industries, and specific farm vehicle drivers, to enable the Agency to make violations of the Federal mobile telephone restriction a disqualifying offense for such drivers. While the explicit Federal restriction against hand-held mobile telephone use applies directly to these drivers, the disqualification provision in § 391.15(g) below would not apply without this amendment to the current exceptions under 49 CFR 391.2.

Section 391.15

FMCSA adds a new paragraph (f) to 49 CFR 391.15 entitled, ''Disqualification for violation of restriction on using a hand-held mobile telephone while driving a commercial motor vehicle.'' This provision provides for the disqualification from operating a CMV in interstate commerce of any driver convicted of two or more violations within a 3-year period of the new hand-held mobile telephone use restriction while operating a CMV as set forth in § 392.82. For the driver's first hand-held mobile telephone use conviction, the Agency could assess a civil penalty against the driver. If a driver is convicted of committing a second hand-held mobile telephone use violation within 3 years, he or she would be disqualified for 60 days, in addition to being subject to the applicable civil penalty. For three or more hand-held mobile telephone use convictions for violations committed within 3 years, a driver would be disqualified for 120 days, in addition to being subject to the applicable civil penalty.

This change to the disqualifying offenses for interstate drivers mirrors the Agency's corresponding new provisions governing the disqualification offenses for CDL drivers in § 383.51(c). The required number of convictions to cause a disqualification by FMCSA and the period of disqualification is the same: 60 days for the second offense within 3 years and 120 days for three or more offenses within 3 years. In addition, the first and each subsequent violation of such a restriction or prohibition by a driver are subject to civil penalties imposed on such drivers, in an amount up to $2,750 (49 U.S.C. 521(b)(2)(A), 49 CFR 386.81 and Appendix B, A(4)).

Section 392.80

FMCSA eliminates the exception pertaining to school bus drivers as a necessary change in light of § 390.3 (f)(1) and (6).

Section 392.82

In § 392.82(a), FMCSA adds a new restriction on use of a hand-held mobile telephone while driving a CMV. This section also states that motor carriers must not allow or require CMV drivers to use a hand-held mobile telephone while driving. Any violation by an employer would subject the employer to civil penalties in an amount up to $11,000 (49 U.S.C. 521(b)(2)(A), 49 CFR 386.81 and part 386 Appendix B, paragraph (a)(3)).

In § 392.82(b), a definition of ''driving a commercial motor vehicle'' is incorporated into the restriction on use of a hand-held mobile telephone while driving, in order to confine the use of that term to the restriction and the related disqualification. We also seek to avoid limiting the scope of the same term as used in other provisions of the FMCSRs.

FMCSA has eliminated the exception pertaining to school bus drivers as a necessary change in light of § 390.3 (f)(1) and (6).

FMCSA adds a limited exception to the hand-held mobile telephone restriction to allow CMV drivers to use their hand-held mobile telephones if necessary to communicate with law enforcement officials or other emergency services. Emergency services are not limited to traditional emergency responders. It may include those who provide security and protection in the special environments in which CMV drivers operate. CMV drivers are always encouraged to report incidents that may threaten national security in a manner consistent with safety.'' [17]

V. Regulatory Analyses

The rule adopted here restricts the use of hand-held mobile telephones by drivers of CMVs. FMCSA adds new driver disqualification sanctions for: (1) Interstate drivers of CMVs who fail to comply with this Federal restriction and (2) CDL holders who have multiple convictions for violating a State or local law or ordinance on motor vehicle traffic control that restricts the use of hand-held mobile telephones. Additionally, motor carriers operating CMVs are prohibited from requiring or allowing a CMV driver to engage in the use of a hand-held mobile telephone. This rulemaking improves safety on the Nation's highways by reducing the prevalence of distracted driving-related crashes, fatalities, and injuries involving

[17] The Department of Homeland Security (DHS) encourages everyone to report suspicious observations under the ''See Something, Say Something™'' brand to a regional or local number. The Transportation Security Administration (TSA) has ambitiously recruited active participation from the commercial motor carrier community for both its Highway Watch® and First Observer™ programs, encouraging commercial drivers to ''observe, assess, and report'' suspicious activity and to report such activity to a national call center ((888) 217–5902) in a manner consistent with safety.

drivers of CMVs. In addition, the rulemaking reduces the financial and environmental burden associated with these crashes and promotes the efficient movement of traffic and commerce on the Nation's highways. The National Highway Traffic Safety Administration reports that, in 2009, 5,474 people were killed on U.S. roadways in motor vehicle crashes that were reported to have involved distracted driving.[18] These fatalities impose a considerable monetary cost to society estimated to be approximately $32.8 billion.[19] In the regulatory evaluation (in the docket for this rule), FMCSA estimates the benefits and costs of implementing a restriction on the use of hand-held mobile telephones while driving a CMV.

FMCSA and PHMSA's threshold analysis for this rule shows that restricting hand-held mobile telephones would lead to an estimated one-year cost of $12.1 million. Current guidance from DOT's Office of the Secretary places the value of a statistical life at $6.0 million. Consequently, this rule will need to eliminate any combination of crash types equivalent to two fatalities per year in order for the benefits of this rule to equal the costs. These results are summarized below in Table 1.

TABLE 1—THRESHOLD ANALYSIS RESULTS

	Total estimated annual costs *	Annual break-even number of fatalities prevented **
Restriction on Use of Hand-Held Mobile Telephones—All CMV Drivers.	$12.1 Million ***	Approximately 2. Fatalities.

* This cost estimate does not include a one-time cost to the States of $2.2 million.
** A statistical life is valued at $6 million.
*** This is a worst case annual cost as it would apply only if 100% of CMV drivers were theoretically replaced every year.

Because FMCSA and PHMSA are addressing two of the risky activities—reaching for and dialing on a hand-held mobile telephone—cited in the Olson, *et al.* (2009) study, restricting the use (including holding) of hand-held mobile telephones is expected to prevent more than two fatalities and the benefits to justify the cost.

Executive Order 12866 (Regulatory Planning and Review), Executive Order 13563 (Improving Regulation and Regulatory Review), and DOT Regulatory Policies and Procedures

FMCSA and PHMSA have determined that this rulemaking action is a significant regulatory action under Executive Order 12866, Regulatory Planning and Review, as supplemented by Executive Order 13563 (76 FR 3821, Jan. 21, 2011), and that it is significant under DOT regulatory policies and procedures because of the substantial Congressional and public interest concerning the crash risks associated with distracted driving. However, the estimated economic costs do not exceed the $100 million annual threshold.

Regulatory Flexibility Act

The Regulatory Flexibility Act of 1980 (5 U.S.C. 601–612) requires Federal agencies to consider the effects of the regulatory action on small business and other small entities and to minimize any significant economic impact. The term ''small entities'' comprises small businesses and not-for-profit organizations that are independently owned and operated and are not dominant in their fields and governmental jurisdictions with populations of less than 50,000. Accordingly, DOT policy requires an analysis of the impact of all regulations on small entities and mandates that agencies strive to lessen any adverse effects on these businesses.

FMCSA

Carriers are not required to report revenue to the Agency, but are required to provide the Agency with the number of power units (PUs) they operate when they register with the Agency and to update this figure biennially. Because FMCSA does not have direct revenue figures, PUs serve as a proxy to determine the carrier size that would qualify as a small business given the SBA's revenue threshold. In order to produce this estimate, it is necessary to determine the average revenue generated by a PU.

With regard to truck PUs, the Agency determined in the 2003 Hours-of-Service Rulemaking RIA[20] that a PU produces about $172,000 in revenue annually (adjusted for inflation).[21] According to the SBA, motor carriers with annual revenue of $25.5 million are considered small businesses.[22] This equates to 148 PUs (25,500,000/172,000). Thus, FMCSA considers motor carriers of property with 148 PUs or fewer to be small businesses for purposes of this analysis. The Agency then looked at the number and percentage of property carriers with recent activity that would have 148 PUs or fewer. The results show that at least 99 percent of all interstate property carriers with recent activity have 148 PUs or fewer.[23] This amounts to 481,788 carriers. Therefore, the overwhelming majority of interstate carriers of property are considered small entities.

With regard to passenger carriers, the Agency conducted a preliminary analysis to estimate the average number of PUs for a small entity earning $7 million annually, based on an assumption that a passenger-carrying PU generates annual revenues of $150,000. This estimate compares reasonably to the estimated average annual revenue per PU for the trucking industry ($172,000). The Agency used a lower estimate because passenger carriers generally do not accumulate as many vehicle miles traveled (VMT) per PU as carriers of property;[24] and it is assumed, therefore, that they would generate less revenue on average. The analysis concludes that passenger carriers with 47 PUs or fewer ($7,000,000 divided by $150,000/PU = 46.7 PU) are considered small entities. The Agency then looked at the number and percentage of passenger carriers registered with FMCSA that have 47 PUs or fewer. The results show that at least 96 percent of all interstate

[18] National Highway Traffic Safety Administration Traffic Safety Facts, Research Note, DOT HS 811 379, September 2010.

[19] This cost assumes a value of statistical life equal to $6 million.

[20] FMCSA Regulatory Analysis, ''Hours-of-Service of Drivers; Driver Rest and Sleep for Safe Operations,'' Final Rule (68 FR 22456, Apr. 23, 2003).

[21] The 2000 *TTS Blue Book of Trucking Companies,* number adjusted to 2008 dollars for inflation.

[22] U.S. Small Business Administration Table of Small Business Size Standards matched to North American Industry Classification (NAIC) System codes, effective August 22, 2008. See NAIC subsector 484, Truck Transportation.

[23] Motor Carrier Management Information System (MCMIS) as of June 17, 2010.

[24] FMCSA Large Truck and Bus Crash Facts 2008, Tables 1 and 20; *http://fmcsa.dot.gov/facts-research/LTBCF2008/Index-2008.*

passenger carriers with recent activity have 47 PUs or fewer.[25] This amounts to 11,338 carriers. Therefore, the overwhelming majority of interstate passenger carriers are considered small entities.

In order to estimate the economic impact of the rule on small entities, FMCSA computed a total annual cost per carrier for each industry segment. First, FMCSA allocated the total cost [26] of the rule in the first year among property and passenger carriers according to their respective shares of total carrier population.[27] Interstate property carriers constitute 98 percent of the total of interstate carriers, whereas interstate passenger carriers constitute 2 percent. The total annual cost of the rule ($12,095,948) [28] was thus weighted by 98 percent for property carriers, leading to a total cost of $11,854,036, and by 2 percent for passenger carriers, leading to a total cost of $241,919. Next, FMCSA divided the two weighted costs by their respective number of small carriers, as described above, arriving at a cost-per-carrier for each segment: $11,854,029/481,788 = $24.60 for property carriers; and $241,919/11,338 = $21.33 for passenger carriers, for a weighted average of $24.50 per small entity.

While this rule clearly impacts a substantial number of small entities, the Agency does not consider a weighted average cost of approximately $24.50 per entity per year to be economically significant in light of the estimated average annual revenue of $172,000.[29] [30]

PHMSA

Similarly, PHMSA has conducted an economic analysis of the impact of this rule on small entities. PHMSA's incorporation of the FMCSA restriction into the HMR may affect nearly 1,490 small entities; however, the direct costs of this rule that small entities may incur are only expected to be minimal. PHMSA relied on the cost estimates for property carriers identified by FMCSA above since these costs were higher than PHMSA found in its regulatory flexibility analysis conducted in support of its April 29, 2011 NPRM. While the final rule will clearly impact a substantial number of small entities, the Agency did not consider an average annual cost of $24.50 per entity to be economically significant.

Accordingly, FMCSA and PHMSA Administrators certify that a regulatory flexibility analysis is not necessary.

Assistance for Small Entities

Under section 213(a) of the Small Business Regulatory Enforcement Fairness Act of 1996 (Pub. L. 104–121), FMCSA and PHMSA seek to assist small entities in their understanding of this rule so they can better evaluate its effects on them. If the rule affects your small business, organization, or governmental jurisdiction and you have questions concerning its provisions or options for compliance, please consult the FMCSA personnel listed in the **FOR FURTHER INFORMATION CONTACT** section of this rule. FMCSA will not retaliate against small entities that question or complain about this rule or any policy or action of the Agency.

Small businesses may send comments on the actions of Federal employees who enforce, or otherwise determine compliance with, Federal regulations to the Small Business and Agriculture Regulatory Enforcement Ombudsman and the Regional Small Business Regulatory Fairness Boards. The Ombudsman evaluates these actions annually and rates each agency's responsiveness to small business. If you wish to comment on actions by employees of FMCSA, call 1–(888) REG–FAIR (1–(888) 734–3247).

Unfunded Mandates Reform Act of 1995

The Unfunded Mandates Reform Act of 1995 (2 U.S.C. 1531–1538) requires Federal agencies to assess the effects of their discretionary regulatory actions. In particular, the Act addresses actions that may result in the expenditure by a State, local, or Tribal government, in the aggregate, or by the private sector, of $ 143.1 million (which is the value of $100 million in 2010 after adjusting for inflation) or more in any 1 year. Though this rule will not result in such expenditure, FMCSA and PHMSA discuss the effects of this rule elsewhere in this preamble.

Paperwork Reduction Act

This rule calls for no new collection of information under the Paperwork Reduction Act of 1995 (44 U.S.C. 3501–3520).

Privacy Impact Assessment

FMCSA and PHMSA conducted a Privacy Threshold Analysis for the rule on restricting the use of hand-held mobile telephones by drivers of CMVs and determined that it is not a privacy-sensitive rulemaking because the rule does not require any collection, maintenance, or dissemination of Personally Identifiable Information from or about members of the public.

Executive Order 13132 (Federalism)

A rule has implications for federalism under Executive Order 13132 entitled, ''Federalism,'' if it has a substantial direct effect on State or local governments, on the relationship between the national government and the States, or on the distribution of powers and responsibilities among the various levels of government. FMCSA and PHMSA recognize that, as a practical matter, this rule may have some impact on the States. None of the State interests contacted by FMCSA, however, or any other commenter expressed concerns to the FMCSA or PHMSA dockets pertaining to the Federalism implications of this rulemaking initiative.

In the most general sense, under long-standing principles, the FMCSRs establish minimum safety regulations that may be supplemented by the States, as long as they are consistent with the regulations. The NPRM described the effect of the proposed rules in accordance with provisions already set forth in the FMCSRs, which establish the basis for the scope of any preemption (75 FR 16398, Apr. 1, 2010). Specifically, 49 CFR 390.9 states that except as otherwise specifically indicated, subchapter B of this chapter [III of Title 49, CFR] is not intended to preclude States or subdivisions thereof from establishing or enforcing State or local laws relating to safety, the compliance with which would not prevent full compliance with these regulations by the persons subject thereto.

This provision allows the States and their subdivisions to enforce their laws and regulations relating to safety, as long as that would not preclude persons subject to the FMCSRs from fully complying with them. This provision satisfies the requirements of 49 U.S.C. 31136(c)(2)(B) by minimizing unnecessary preemption and allowing the States to establish additional regulations that do not prevent full compliance with the FMCSRs. (*See also* 49 U.S.C. 31141(c)).

Executive Order 12630 (Taking of Private Property)

This rule will not effect a taking of private property or otherwise have taking implications under Executive Order 12630 entitled, ''Governmental

[25] MCMIS, as of June 17, 2010.

[26] The total cost in this section does not include costs to the States.

[27] The actual cost burden may not necessarily be proportionate to the carrier segment's share in the industry. Absent information on this distribution, FMCSA applied the above assumption.

[28] Excluding costs to the States.

[29] Regulatory Analysis for: Hours-of-Service of Drivers; Driver Rest and Sleep for Safe Operations, Final Rule, FMCSA (68 FR 22456; Apr. 23, 2003).

[30] The 2000 TTS Blue Book of Trucking Companies, number adjusted to 2008 dollars for inflation.

Actions and Interference with Constitutionally Protected Property Rights.''

Executive Order 12988 (Civil Justice Reform)

This rule meets applicable standards in sections 3(a) and 3(b)(2) of Executive Order 12988 entitled, ''Civil Justice Reform,'' to minimize litigation, eliminate ambiguity, and reduce burden.

Executive Order 13045 (Protection of Children)

FMCSA and PHMSA analyzed this rule under Executive Order 13045 entitled, ''Protection of Children from Environmental Health Risks and Safety Risks.'' This rule is not an economically significant rule and will not create an environmental risk to health or risk to safety that might disproportionately affect children.

Executive Order 13211 (Energy Supply, Distribution, or Use)

FMCSA and PHMSA analyzed this rule under Executive Order 13211 entitled, ''Actions Concerning Regulations That Significantly Affect Energy Supply, Distribution, or Use.'' The agencies determined that it is not a ''significant energy action'' under that order. Though it is nonetheless a potentially ''significant regulatory action'' under Executive Order 12866, it is not likely to have a significant adverse effect on the supply, distribution, or use of energy. The Administrator of the Office of Information and Regulatory Affairs, OMB, has not designated it as a significant energy action. Therefore, it does not require a Statement of Energy Effects under Executive Order 13211.

Technical Standards

The National Technology Transfer and Advancement Act (15 U.S.C. 272 note) directs agencies to use voluntary consensus standards in their regulatory activities unless the agency provides Congress, through OMB, with an explanation of why using these standards would be inconsistent with applicable law or otherwise impractical. Voluntary consensus standards are technical standards (*e.g.,* specifications of materials, performance, design, or operation; test methods; sampling procedures; and related management systems practices) that are developed or adopted by voluntary consensus standards bodies.

FMCSA and PHMSA are not aware of any technical standards used to address mobile telephone use by CMV drivers and, therefore, did not consider any such standards.

National Environmental Policy Act

FMCSA analyzed this rule for the purpose of the National Environmental Policy Act of 1969 (NEPA) (42 U.S.C. 4321 *et seq.*), determined under our environmental procedures Order 5610.1, published March 1, 2004, in the **Federal Register** (69 FR 9680), and preliminarily assessed that this action requires an Environmental Assessment (EA) to determine if a more extensive Environmental Impact Statement (EIS) is required. The findings in the Final EA indicate there are no significant positive or negative impacts to the environment expected from the various options in the rule though there could be minor impacts on emissions, hazardous materials spills, solid waste, socioeconomics, and public health and safety. Thus, FMCSA, as the lead agency in this initiative, issues a Finding of No Significant Impact (FONSI) and will not perform an EIS.

PHMSA discussed NEPA requirements in its April 29, 2011 NPRA (76 FR 23929). Specifically, PHMSA indicated that it did not anticipate any significant positive or negative impacts on the environment expected to result from the rulemaking action. In the NPRM, PHMSA requested comments regarding safety and security measures that would provide greater benefit to the human environment or on alternative actions the agency could take that would provide beneficial impacts. PHMSA did not receive any comments on this matter.

In addition, the FMCSA prepared an Environmental Assessment for this rulemaking, and will sign a Finding of No Significant Impact (FONSI). As is noted in 40 CFR 1506.3, it is appropriate for an agency to accept an environmental document in part or in whole, as long as the actions covered by the original NEPA analysis are substantially the same. PHMSA hereby states that the rulemakings are substantially similar, and adopts the Final Environmental Assessment (FEA) as prepared by FMCSA, as well as the conclusions the FEA reaches. The FMCSA FEA has been used to support a FONSI, which has been prepared and signed by the appropriate decision maker within PHMSA. No further NEPA analysis will be performed.

FMCSA also analyzed this rule under the Clean Air Act, as amended (CAA), section 176(c), (42 U.S.C. 7401 *et seq.*) and implementing regulations promulgated by the Environmental Protection Agency. Approval of this action is exempt from the CAA's general conformity requirement since it will not result in any potential increase in emissions that are above the general conformity rule's *de minimis* emission threshold levels (40 CFR 93.153(c)(2)). Moreover, based on our analysis, it is reasonably foreseeable that the rule will not significantly increase total CMV mileage, nor will it significantly change the routing of CMVs, how CMVs operate, or the CMV fleet-mix of motor carriers. The action merely establishes requirements to restrict a driver's use of a hand-held mobile telephone while operating a CMV.

List of Subjects

49 CFR Part 177

Hazardous materials transportation, Motor carriers, Radioactive materials, Reporting and recordkeeping requirements.

49 CFR Part 383

Administrative practice and procedure, Alcohol abuse, Drug abuse, Highway safety, Motor carriers.

49 CFR Part 384

Administrative practice and procedure, Alcohol abuse, Drug abuse, Highway safety, Motor carriers.

49 CFR Part 390

Highway safety, Intermodal transportation, Motor carriers, Motor vehicle safety, Reporting and recordkeeping requirements.

49 CFR Part 391

Alcohol abuse, Drug abuse, Drug testing, Highway safety, Motor carriers, Reporting and recordkeeping requirements, Safety, Transportation.

49 CFR Part 392

Alcohol abuse, Drug abuse, Highway safety, Motor carriers.

For the reasons discussed in the preamble, FMCSA and PHMSA amend 49 CFR parts 177, 383, 384, 390, 391, and 392 as follows:

PART 177—CARRIAGE BY PUBLIC HIGHWAY

■ 1. The authority citation for part 177 continues to read as follows:

Authority: 49 U.S.C. 5101–5128; 49 CFR 1.53.

■ 2. Amend § 177.804 by adding a new paragraph (c) to read as follows:

§ 177.804 Compliance with Federal Motor Carrier Safety Regulations.

* * * * *

(c) *Prohibition against the use of hand-held mobile telephones.* In accordance with § 392.82 of this

chapter, a person transporting a quantity of hazardous materials requiring placarding under Part 172 of this chapter or any quantity of a material listed as a select agent or toxin in 42 CFR part 73 may not engage in, allow, or require use of a hand-held mobile telephone while driving.

PART 383—COMMERCIAL DRIVER'S LICENSE STANDARDS; REQUIREMENTS AND PENALTIES

■ 3. The authority citation for part 383 is revised to read as follows:

Authority: 49 U.S.C. 521, 31136, 31301 *et seq.,* and 31502; secs. 214 and 215, Pub. L. 106–159, 113 Stat. 1748, 1766, 1767; sec. 4140, Pub. L. 109–59, 119 Stat. 1144, 1746; and 49 CFR 1.73.

■ 4. Amend § 383.5 by adding the definition ''mobile telephone'' in alphabetical order and revising the definition of ''texting'' to read as follows:

§ 383.5 Definitions.

* * * * *

Mobile telephone means a mobile communication device that falls under or uses any commercial mobile radio service, as defined in regulations of the Federal Communications Commission, 47 CFR 20.3. It does not include two-way or Citizens Band Radio services.

* * * * *

Texting means manually entering alphanumeric text into, or reading text from, an electronic device.

(1) This action includes, but is not limited to, short message service, emailing, instant messaging, a command or request to access a World Wide Web page, pressing more than a single button to initiate or terminate a voice communication using a mobile telephone, or engaging in any other form of electronic text retrieval or entry, for present or future communication.

(2) Texting does not include:

(i) Inputting, selecting, or reading information on a global positioning system or navigation system; or

(ii) Pressing a single button to initiate or terminate a voice communication using a mobile telephone; or

(iii) Using a device capable of performing multiple functions (*e.g.,* fleet management systems, dispatching devices, smart phones, citizens band radios, music players, *etc.*) for a purpose that is not otherwise prohibited in this part.

* * * * *

■ 5. Amend § 383.51 by adding a new paragraph (c)(10) to Table 2 and revising footnote 2 to read as follows:

§ 383.51 Disqualifications of drivers.

* * * * *

(c) * * *

TABLE 2 TO § 383.51

If the driver operates a motor vehicle and is convicted of:	For a second conviction of any combination of offenses in this Table in a separate incident within a 3-year period while operating a CMV, a person required to have a CLP or CDL and a CLP or CDL holder must be disqualified from operating a CMV for . . .	For a second conviction of any combination of offenses in this Table in a separate incident within a 3-year period while operating a non-CMV, a CLP or CDL holder must be disqualified from operating a CMV, if the conviction results in the revocation, cancellation, or suspension of the CLP or CDL holder's license or non-CMV driving privileges, for . . .	For a third or subsequent conviction of any combination of offenses in this Table in a separate incident within a 3-year period while operating a CMV, a person required to have a CLP or CDL and a CLP or CDL holder must be disqualified from operating a CMV for . . .	For a third or subsequent conviction of any combination of offenses in this Table in a separate incident within a 3-year period while operating a non-CMV, a CLP or CDL holder must be disqualified from operating a CMV, if the conviction results in the revocation, cancellation, or suspension of the CLP or CDL holder's license or non-CMV driving privileges, for . . .
*	*	*	*	*
(10) Violating a State or local law or ordinance on motor vehicle traffic control restricting or prohibiting the use of a hand-held mobile telephone while driving a CMV.[2]	60 days	Not applicable	120 days	Not applicable.
*	*	*	*	*

[2] *Driving, for the purpose of this disqualification,* means operating a commercial motor vehicle on a highway, including while temporarily stationary because of traffic, a traffic control device, or other momentary delays. Driving does not include operating a commercial motor vehicle when the driver has moved the vehicle to the side of, or off, a highway and has halted in a location where the vehicle can safely remain stationary.

* * * * *

PART 384—STATE COMPLIANCE WITH COMMERCIAL DRIVER'S LICENSE PROGRAM

■ 6. The authority citation for part 384 is revised to read as follows:

Authority: 49 U.S.C. 31136, 31301, *et seq.,* and 31502; secs. 103 and 215, Pub. L. 106–159, 113 Stat. 1748, 1753, 1767; and 49 CFR 1.73.

■ 7. Amend § 384.301 by adding a new paragraph (h) to read as follows:

§ 384.301 Substantial compliance—general requirements.

* * * * *

(h) A State must come into substantial compliance with the requirements of subpart B of this part in effect as of January 3, 2012) as soon as practical, but not later than January 3, 2015.

PART 390—FEDERAL MOTOR CARRIER SAFETY REGULATIONS; GENERAL

■ 8. The authority citation for part 390 is revised to read as follows:

Authority: 49 U.S.C. 504, 508, 31132, 31133, 31136, 31144, 31151, and 31502; sec. 114, Pub. L. 103–311, 108 Stat. 1673, 1677–1678; secs. 212 and 217, Pub. L. 106–159, 113 Stat. 1748, 1766, 1767; sec. 229, Pub. L. 106–159 (as transferred by sec. 4115 and amended by secs. 4130–4132, Pub. L. 109–59, 119 Stat.

1144, 1726, 1743–1744); sec. 4136, Pub. L. 109–59, 119 Stat. 1144, 1745; and 49 CFR 1.73.

■ 9. Amend § 390.3 by revising paragraphs (f)(1) and (f)(6) to read as follows:

§ 390.3 General applicability.

* * * * *

(f) * * *

(1) All school bus operations as defined in § 390.5, except for the provisions of §§ 391.15(f), 392.80, and 392.82 of this chapter.

* * * * *

(6) The operation of commercial motor vehicles designed or used to transport between 9 and 15 passengers (including the driver), not for direct compensation, provided the vehicle does not otherwise meet the definition of a commercial motor vehicle, except that motor carriers and drivers operating such vehicles are required to comply with §§ 390.15, 390.19, 390.21(a) and (b)(2), 391.15(f), 392.80 and 392.82 of this chapter.

* * * * *

■ 10. Amend § 390.5 by adding the definitions ''mobile telephone'' and ''use a hand-held mobile telephone'' in alphabetical order and revising the definition of ''texting'' to read as follows:

§ 390.5 Definitions.

* * * * *

Mobile telephone means a mobile communication device that falls under or uses any commercial mobile radio service, as defined in regulations of the Federal Communications Commission, 47 CFR 20.3. It does not include two-way or Citizens Band Radio services.

* * * * *

Texting means manually entering alphanumeric text into, or reading text from, an electronic device.

(1) This action includes, but is not limited to, short message service, emailing, instant messaging, a command or request to access a World Wide Web page, pressing more than a single button to initiate or terminate a voice communication using a mobile telephone, or engaging in any other form of electronic text retrieval or entry, for present or future communication.

(2) Texting does not include:

(i) Inputting, selecting, or reading information on a global positioning system or navigation system; or

(ii) Pressing a single button to initiate or terminate a voice communication using a mobile telephone; or

(iii) Using a device capable of performing multiple functions (*e.g.,* fleet management systems, dispatching devices, smart phones, citizens band radios, music players, *etc.*) for a purpose that is not otherwise prohibited in this part.

* * * * *

Use a hand-held mobile telephone means:

(1) Using at least one hand to hold a mobile telephone to conduct a voice communication;

(2) Dialing or answering a mobile telephone by pressing more than a single button, or

(3) Reaching for a mobile telephone in a manner that requires a driver to maneuver so that he or she is no longer in a seated driving position, restrained by a seat belt that is installed in accordance with 49 CFR 393.93 and adjusted in accordance with the vehicle manufacturer's instructions.

PART 391—QUALIFICATION OF DRIVERS AND LONGER COMBINATION VEHICLE (LCV) DRIVER INSTRUCTIONS

■ 11. The authority citation for part 391 is revised to read as follows:

Authority: 49 U.S.C. 504, 508, 31133, 31136, and 31502; sec. 4007(b), Pub. L. 102–240, 105 Stat, 1914, 2152; sec. 114, Pub. L. 103–311, 108 Stat. 1673, 1677; sec. 215, Pub. L. 106–159, 113 Stat. 1748, 1767; and 49 CFR 1.73.

■ 12. Revise § 391.2 to read as follows:

§ 391.2 General exceptions.

(a) *Farm custom operation.* The rules in this part, except for § 391.15(e) and (g), do not apply to a driver who drives a commercial motor vehicle controlled and operated by a person engaged in custom-harvesting operations, if the commercial motor vehicle is used to—

(1) Transport farm machinery, supplies, or both, to or from a farm for custom-harvesting operations on a farm; or

(2) Transport custom-harvested crops to storage or market.

(b) *Apiarian industries.* The rules in this part, except for § 391.15(e) and (g), do not apply to a driver who is operating a commercial motor vehicle controlled and operated by a beekeeper engaged in the seasonal transportation of bees.

(c) *Certain farm vehicle drivers.* The rules in this part, except for § 391.15(e) and (g), do not apply to a farm vehicle driver except a farm vehicle driver who drives an articulated (combination) commercial motor vehicle, as defined in § 390.5 of this chapter. For limited exemptions for farm vehicle drivers of articulated commercial motor vehicles, see § 391.67.

■ 13. Amend § 391.15 by adding a new paragraph (f) to read as follows:

§ 391.15 Disqualification of drivers.

* * * * *

(f) Disqualification for violation of a restriction on using a hand-held mobile telephone while driving a commercial motor vehicle—

(1) *General rule.* A driver who is convicted of violating the restriction on using a hand-held mobile telephone in § 392.82(a) of this chapter is disqualified from driving a commercial motor vehicle for the period of time specified in paragraph (g)(2) of this section.

(2) *Duration.* Disqualification for violation of a restriction on using a hand-held mobile telephone while driving a commercial motor vehicle—

(i) *Second violation.* A driver is disqualified for 60 days if the driver is convicted of two violations of § 392.82(a) of this chapter in separate incidents committed during any 3-year period.

(ii) *Third or subsequent violation.* A driver is disqualified for 120 days if the driver is convicted of three or more violations of § 392.82(a) of this chapter in separate incidents committed during any 3-year period.

PART 392—DRIVING OF COMMERCIAL MOTOR VEHICLES

■ 14. The authority citation for part 392 is revised to read as follows:

Authority: 49 U.S.C. 504, 13902, 31136, 31151, 31502; and 49 CFR 1.73.

■ 15. Amend § 392.80 by revising paragraph (d) to read as follows:

§ 392.80 Prohibitions against texting.

* * * * *

(d) *Emergency exception.* Texting while driving is permissible by drivers of a commercial motor vehicle when necessary to communicate with law enforcement officials or other emergency services.

■ 16. Amend part 392, subpart H, by adding a new § 392.82 to read as follows:

§ 392.82 Using a hand-held mobile telephone.

(a)(1) No driver shall use a hand-held mobile telephone while driving a CMV.

(2) No motor carrier shall allow or require its drivers to use a hand-held mobile telephone while driving a CMV.

(b) *Definitions.* For the purpose of this section only, *driving* means operating a commercial motor vehicle on a highway, including while temporarily stationary because of traffic, a traffic control device, or other momentary delays. Driving does not include

operating a commercial motor vehicle when the driver has moved the vehicle to the side of, or off, a highway and has halted in a location where the vehicle can safely remain stationary.

(c) Emergency exception. Using a hand-held mobile telephone is permissible by drivers of a CMV when necessary to communicate with law enforcement officials or other emergency services.

Issued on: November 22, 2011.

William Bronrott,

Deputy Administrator, Federal Motor Carrier Safety Administration.

Cynthia L. Quarterman,

Administrator, Pipeline and Hazardous Materials Safety Administration.

[FR Doc. 2011–30749 Filed 12–1–11; 8:45 am]

BILLING CODE 4910–EX–P

DEPARTMENT OF COMMERCE

National Oceanic and Atmospheric Administration

50 CFR Parts 622 and 640

[Docket No. 100305126–1576–04]

RIN 0648–AY72

Fisheries of the Caribbean, Gulf of Mexico, and South Atlantic; Spiny Lobster Fishery of the Gulf of Mexico and South Atlantic; Amendment 10

AGENCY: National Marine Fisheries Service (NMFS), National Oceanic and Atmospheric Administration (NOAA), Commerce.

ACTION: Final rule.

SUMMARY: NMFS issues this final rule to implement Amendment 10 to the Fishery Management Plan for the Spiny Lobster Fishery of the Gulf of Mexico and South Atlantic (FMP), as prepared and submitted by the Gulf of Mexico and South Atlantic Fishery Management Councils (Councils). This rule revises the lobster species contained within the fishery management unit; establishes an annual catch limit (ACL) for Caribbean spiny lobster; revises the Federal spiny lobster tail-separation permit requirements; revises the regulations specifying the condition of spiny lobster landed during a fishing trip; modifies the undersized attractant regulations; modifies the framework procedures and the protocol for cooperative management with Florida; and authorizes the removal of derelict traps in Federal waters off Florida through Florida's trap cleanup program. Additionally, this rule revises codified text to reflect updated contact information for the state of Florida and regulatory references for the Florida Administrative Code. The intent of this final rule is to specify ACLs for spiny lobster while maintaining catch levels consistent with achieving optimum yield (OY) for the resource.

DATES: This rule is effective January 3, 2012. The incorporation by reference of certain publications listed in the rule is approved by the Director of the Federal Register as of January 3, 2012.

ADDRESSES: Electronic copies of the amendment, which includes an environmental impact statement, a regulatory impact review, and the initial regulatory flexibility analysis (IRFA), may be obtained from the Southeast Regional Office Web site at *http://sero.nmfs.noaa.gov/sf/pdfs/Spiny_Lobster_Amendment_10_August2011.pdf.*

FOR FURTHER INFORMATION CONTACT: Susan Gerhart, telephone: (727) 824–5305, or email: *Susan.Gerhart@noaa.gov.*

SUPPLEMENTARY INFORMATION: The spiny lobster fishery of the Gulf of Mexico (Gulf) and the South Atlantic is managed under the FMP. The FMP was prepared by the Councils and implemented through regulations at 50 CFR parts 622 and 640 under the authority of the Magnuson-Stevens Fishery Conservation and Management Act (Magnuson-Stevens Act).

On September 2, 2011, NMFS published a notice of availability for Amendment 10 and requested public comment (76 FR 54227). On September 23, 2011, NMFS published a proposed rule for Amendment 10 and requested public comment (76 FR 59102). The proposed rule and Amendment 10 outline the rationale for the actions contained in this final rule. A summary of the actions implemented by this final rule are provided below.

This final rule will remove all species from the FMP except the Caribbean spiny lobster (spiny lobster). The Councils and NMFS have determined the four other lobster species currently in the FMP are not in need of Federal management at this time. If landings or effort change for the lobster species being removed from the FMP and the Councils determine management at the Federal level is needed, these species could be added back into the FMP at a later date.

This rule will establish an ACL, an annual catch target (ACT) and an AM for spiny lobster. For the recreational and commercial spiny lobster sectors combined, the ACL is 7.32 million lb (3.32 million kg), whole weight. The combined ACT is 6.59 million lb, (2.99 million kg) whole weight. The ACT will serve as the AM for the spiny lobster stock. If the ACT is exceeded in any year, the Councils will convene a scientific panel to review the ACL and ACT, and determine if additional AMs are needed.

This final rule revises the Federal spiny lobster tail-separation permit requirements to ensure permit issuance is limited to commercial fishermen. This rule requires applicants for a Federal spiny lobster tail-separation permit to possess either (1) a Federal spiny lobster permit or (2) a valid Florida Restricted Species Endorsement and a valid Crawfish Endorsement associated with a valid Florida Saltwater Products License.

This rule also requires lobster to be landed either all whole or all tailed during a single fishing trip to discourage selective tailing of potentially undersized lobsters and thereby aid the enforcement of the minimum size limit.

This rule revises Federal regulations specific to the use of undersized attractants to be consistent with current Florida regulations, which allow the retention of as many as 50 spiny lobsters less than the minimum size limit and one per trap.

To facilitate timely adjustments to harvest parameters and other management measures, this final rule revises the current framework procedures. This revision gives the Councils and NMFS greater flexibility to more promptly alter harvest parameters and other management measures as new scientific information becomes available.

An Endangered Species Act (ESA) biological opinion, completed on August 27, 2009, evaluated the impacts of the continued authorization of the spiny lobster fishery on ESA-listed species. The biological opinion required the consideration of alternatives to allow the public to remove trap-related marine debris in the exclusive economic zone (EEZ) off Florida. This rule authorizes the removal of traps in Federal waters off Florida through Florida's trap cleanup program, as provided in existing Florida regulations. Florida's trap cleanup program includes provisions for public participation.

Additionally, this rule includes new incorporations by reference and revises a number of references within the Federal regulations for spiny lobster. Specifically, this rule updates the spiny lobster regulations with the contact information for the state of Florida administrative offices and the relevant references within the Florida statutes and administrative code that are contained within the Federal regulations at 50 CFR parts 622 and 640.

New material that is incorporated by reference includes Florida Administrative Code Rules 68B–55.002 (Retrieval of Trap Debris) and 68B–55.004 (Retrieval of Derelict and Traps Located in Areas Permanently Closed to Trapping). These additional revisions are unrelated to the actions contained in Amendment 10.

Comments and Responses

NMFS received nine public comment submissions on Amendment 10 and the proposed rule, including two comments from individuals, four copies of a form letter sent by individuals, and two comments from non-governmental organizations. A Federal agency also submitted a letter stating they had no comment on the rule. Comments related to the actions contained in the amendment or the proposed rule are summarized and responded to below.

Comment 1: New regulations on recreational lobster fishermen will not help protect lobster and corals because commercial fishing has a bigger impact on these resources than the recreational sector.

Response: The Magnuson-Stevens Act requires ACLs and AMs for most federally managed species. Both the commercial and recreational sectors must be accountable. This rule sets a single ACL and a single ACT that apply to both sectors. The ACT of 6.59 million lb (2.99 million kg) is higher than the recent 10-year average of landings for the commercial and recreational sectors combined, and has only been exceeded once in the past 10 years. Therefore, this ACT is not expected to be exceeded and AMs are not expected to be triggered, resulting in no change to how commercial or recreational lobster fishing is prosecuted.

Comment 2: The use of undersized attractants in the lobster commercial sector should be prohibited.

Response: Although the use of undersized lobsters as attractants results in increased confinement mortality, to prohibit their use may actually increase total bycatch because traps with alternate types of bait need to soak longer to achieve the same catch levels as traps with undersized attractants. Additionally, recent information shows the majority of recruits do not come from within the United States, suggesting that the use of undersized Caribbean spiny lobsters and other management measures for the Caribbean spiny lobster fishery would have negligible biological impacts on the lobster population within the United States. Based in part on these findings, it is unlikely that the continued use of undersized Caribbean spiny lobsters as attractants would have significant adverse effects on the biological environment.

Comment 3: Actions to remove species from the FMP, set an ACL and AM, update the framework procedures, and give authority to Florida to clean up traps in the EEZ were supported.

Response: NMFS agrees these actions are necessary and appropriate.

Comment 4: Allocations between the lobster commercial and recreational sectors should be set with at least 26 percent of the stock allocated to the recreational sector.

Response: Allocations would be necessary if sector ACLs were set. However, the Councils chose to set a single stock ACL and ACT. The Councils chose not to designate sector allocations to minimize the administrative burden of tracking separate landings for each sector. Also, because the ACL will likely not be exceeded under the current fishery conditions, which will allow both sectors to harvest what they have in past years, thereby avoiding the need to specifically allocate the resource. The Councils may review the decision for sector allocations if landings increase in the future.

Comment 5: Federal tailing permits should be eliminated and lobster should be landed all whole.

Response: The ability to tail spiny lobsters is important to fishermen who do not have the storage capacity to hold large amounts of whole spiny lobster onboard over long trip durations. Tailing allows such fishermen to safely store more product in coolers without compromising quality, thus maximizing the profitability of each trip. A Federal spiny lobster tail-separation permit is required to possess spiny lobsters that have been tailed, and the trips must be 48 hours or longer in duration. The regulations implemented through this rule require permits designating the entity as a commercial fisher to obtain a tail-separation permit.

Comment 6: Do not finalize Amendment 10 until the supplemental environmental impact statement for Amendment 11 to the Spiny Lobster FMP is completed and impacts to *Acropora* are analyzed.

Response: Delaying implementation of Amendment 10 would produce no benefit to *Acropora.* The impacts of spiny lobster trapping on *Acropora* were analyzed in the biological opinion. The measures to protect *Acropora* will be addressed in Amendment 11, which is currently being developed and is expected to be implemented before the beginning of the next fishing season, which begins August 6, 2012.

Comment 7: Lobster traps should be prohibited in all areas with *Acropora,* cumulative impacts to *Acropora* should be analyzed, and the benefits to marine mammals and other imperiled species should be considered when establishing closed areas.

Response: The impacts of lobster trap fishing on protected species, including cumulative impacts, were analyzed in the 2009 biological opinion, which can be found in Appendix I of Amendment 10. Amendment 11 will address closing areas with *Acropora* to lobster fishing.

Comment 8: NMFS should analyze the decision to take four spiny lobster species off the federally managed list under the ESA. The four species should be designated as ecosystem component species.

Response: The decision to remove species from the FMP was analyzed in Amendment 10. These species were originally added to the FMP for data collection purposes; however, even after these species are removed from the FMP, if they are landed and sold to a Federally permitted dealer, landings data will still be recorded for these species. Designation of these species as ecosystem component species provides no additional protection to these stocks. Additionally, these species are not listed under the ESA, as stated in one comment letter.

Comment 9: NMFS should ensure that the state management of the lobster fishery does not violate the ESA by strongly encouraging Florida to pursue an ESA Section 10 incidental take permit and to develop a conservation plan for the state's spiny lobster fishery.

Response: NMFS encourages states to ensure protection of threatened and endangered species, and will request affected states to enact compatible regulations for the spiny lobster fishery in state waters.

Comment 10: The AM implemented through this rule will not hold the fishery within its ACL.

Response: The AM is to have an ACT that is 90 percent of the ACL. The Councils determined an ACT that is 10 percent lower than the ACL would provide an adequate buffer between the target level of harvest and the annual limit on harvest. An overage of the ACT would trigger the Councils to convene a review panel to assess whether or not corrective action is needed to prevent the ACL from being exceeded. It is unlikely the ACL would be exceeded based on recent landings by the fishery; however, the updated framework procedures contained within Amendment 10 will facilitate timely adjustments to potential management measures in the future. The ability to

expeditiously implement framework modifications for Caribbean spiny lobster would limit any negative biological impact that could result from an ACT overage.

Classification

Pursuant to section 304(b)(1)(A) of the Magnuson-Stevens Act, the NMFS Assistant Administrator has determined that this final rule is consistent with Amendment 10 and the FMP subject to this rulemaking, other provisions of the Magnuson-Stevens Act, and other applicable law.

This final rule has been determined to be not significant for purposes of Executive Order 12866.

NMFS prepared an IRFA for the proposed rule that described the economic impact of the rule. As described in the IRFA, only the action addressing the possession and landing of tailed lobsters in or from the EEZ was expected to have any adverse economic effect on small entities, specifically for-hire vessels. Although the economic effects of this action could not be quantified because of an absence of data, the analysis concluded that because the majority of for-hire vessels are not expected to engage in the practice of landing tailed lobsters, or depend on extended trips on which tailing may be the more practical alternative for a significant portion of their revenues, this action would not be expected to affect a substantial number of entities in the for-hire fleet. As a result, the IRFA concluded that the actions in this rule would not be expected to significantly reduce profits for a substantial number of small entities. Because of the absence of data, however, public comment was requested on this determination and a certification was not prepared. No comments were received regarding the determination. Therefore, the Chief Counsel for Regulation of the Department of Commerce certified to the Chief Counsel for Advocacy of the Small Business Administration that this action will not have a significant economic impact on a substantial number of small entities. The factual basis for the certification was published in the proposed rule and is not repeated here. As a result, a final regulatory flexibility analysis was not required and none was prepared.

List of Subjects

50 CFR Part 622

Fisheries, Fishing, Incorporation by reference, Puerto Rico, Reporting and recordkeeping requirements, Virgin Islands.

50 CFR Part 640

Fisheries, Fishing, Incorporation by reference, Reporting and recordkeeping requirements.

Dated: November 29, 2011.

Samuel D. Rauch III,

Deputy Assistant Administrator for Regulatory Programs, National Marine Fisheries Service.

For the reasons set out in the preamble, 50 CFR parts 622 and 640 are amended as follows:

PART 622—FISHERIES OF THE CARIBBEAN, GULF, AND SOUTH ATLANTIC

■ 1. The authority citation for part 622 continues to read as follows:

Authority: 16 U.S.C. 1801 *et seq.*

■ 2. In § 622.2, the definition for ''Caribbean spiny lobster'' is removed and the definition for ''Caribbean spiny lobster or spiny lobster'' is added in alphabetical order to read as follows:

§ 622.2 Definitions and acronyms.

* * * * *

Caribbean spiny lobster or *spiny lobster* means the species *Panulirus argus,* or a part thereof.

* * * * *

■ 3. In § 622.6, paragraph (b)(1)(iv) is revised to read as follows:

§ 622.6 Vessel and gear identification.

* * * * *

(b) * * *

(1) * * *

(iv) *Unmarked traps, pots, or buoys.* An unmarked Caribbean spiny lobster trap, a fish trap, a golden crab trap, a sea bass pot, or a buoy deployed in the EEZ where such trap, pot, or buoy is required to be marked is illegal and may be disposed of in any appropriate manner by the Assistant Administrator or an authorized officer. In the EEZ off Florida, during times other than the authorized fishing season, a Caribbean spiny lobster trap, buoy, or any connecting lines will be considered derelict and may be disposed of in accordance with Florida Administrative Code Chapter 68B–55: Trap retrieval and trap debris removal, Rule 68B–55.002: Retrieval of Trap Debris and Chapter 68B–55: Trap retrieval and trap debris removal, Rule 68B–55.004: Retrieval of Derelict and Traps Located in Areas Permanently Closed to Trapping, both in effect as of October 15, 2007. This incorporation by reference was approved by the Director of the Office of the Federal Register in accordance with 5 U.S.C. 552(a) and 1 CFR part 51. These materials are incorporated as they exist on the date of approval and a notice of any change in these materials will be published in the **Federal Register**. All material incorporated by reference is available for inspection at the NMFS, Office of Sustainable Fisheries, Office of the Regional Administrator, 1315 East-West Highway, Silver Spring, MD; and the National Archives and Records Administration (NARA), Office of the Federal Register, 800 North Capitol Street NW., Suite 700, Washington, DC. For more information on the availability of this material at NARA, call (202) 741–6030 or go to *http://www.archives.gov/federal_register/code_of_federal_regulations/ibr_locations.html.* Copies of the incorporated material may be obtained from the Florida Division of Marine Fisheries Management, 620 South Meridian Street, Tallahassee, FL 32399; telephone: (850) 488–4676.

* * * * *

PART 640—SPINY LOBSTER FISHERY OF THE GULF OF MEXICO AND SOUTH ATLANTIC

■ 4. The authority citation for part 640 continues to read as follows:

Authority: 16 U.S.C. 1801 *et seq.*

■ 5. In § 640.1, paragraph (b) is revised to read as follows:

§ 640.1 Purpose and scope.

* * * * *

(b) This part governs the conservation and management of Caribbean spiny lobster (spiny lobster) in the EEZ in the Atlantic Ocean and Gulf of Mexico off the Atlantic and Gulf of Mexico states from the Virginia/North Carolina border south and through the Gulf of Mexico. This part also governs importation of spiny lobster into any place subject to the jurisdiction of the United States.

* * * * *

■ 6. In § 640.2, the definitions for ''slipper (Spanish) lobster'' and ''spiny lobster'' are removed and the definition for ''Caribbean spiny lobster or spiny lobster'' is added in alphabetical order to read as follows:

§ 640.2 Definitions.

* * * * *

Caribbean spiny lobster or *spiny lobster* means the species *Panulirus argus,* or a part thereof.

* * * * *

■ 7. In § 640.4, paragraphs (a)(1)(i) and (a)(2) are revised to read as follows:

§ 640.4 Permits and fees.

(a) * * *

(1) * * *

(i) *EEZ off Florida and spiny lobster landed in Florida.* For a person to sell, trade, or barter, or attempt to sell, trade, or barter, a spiny lobster harvested or possessed in the EEZ off Florida, or harvested in the EEZ other than off Florida and landed from a fishing vessel in Florida, or for a person to be exempt from the daily bag and possession limit specified in ''640.23(b)(1) for such spiny lobster, such person must have the licenses and certificates specified to be a ''commercial harvester,'' as defined in Rule 68B–24.002, Florida Administrative Code, in effect as of July 1, 2008 (incorporated by reference, see § 640.29).

* * * * *

(2) *Tail-separation permits.* For a person to possess aboard a fishing vessel a separated spiny lobster tail in or from the EEZ as defined in § 640.1(b), a valid Federal tail-separation permit must be issued to the vessel and must be on board. Permitting prerequisites for the tail-separation permit are either a valid Federal vessel permit for spiny lobster or a valid Florida Saltwater Products License with a valid Florida Restricted Species Endorsement and a valid Crawfish Endorsement.

* * * * *

■ 8. In § 640.6, paragraphs (a) and (c) are revised to read as follows:

§ 640.6 Vessel and gear identification.

(a) *EEZ off Florida.* (1) An owner or operator of a vessel that is used to harvest spiny lobster by traps in the EEZ off Florida must comply with the vessel and gear identification requirements specified in sections 379.367(2)(a)1 and 379.367(3), Florida Statutes, in effect as of July 1, 2009 and in Rule 68B–24.006(3), (4), and (5), Florida Administrative Code, in effect as of July 1, 2008 (incorporated by reference, see § 640.29).

(2) An owner or operator of a vessel that is used to harvest spiny lobsters by diving in the EEZ off Florida must comply with the vessel identification requirements applicable to the harvesting of spiny lobsters by diving in Florida's waters in Rule 68B–24.006(6), Florida Administrative Code, in effect as of July 1, 2008 (incorporated by reference, see § 640.29).

* * * * *

(c) *Unmarked traps and buoys.* An unmarked spiny lobster trap or buoy in the EEZ is illegal gear.

(1) *EEZ off Florida.* Such trap or buoy, and any connecting lines, during times other than the authorized fishing season, will be considered derelict and may be disposed of in accordance with Rules 68B–55.002 and 68B–55.004 of the Florida Administrative Code, in effect as of October 15, 2007 (incorporated by reference, see § 640.29). An owner of such trap or buoy remains subject to appropriate civil penalties.

(2) *EEZ other than off Florida.* Such trap or buoy, and any connecting lines, will be considered unclaimed or abandoned property and may be disposed of in any manner considered appropriate by the Assistant Administrator or an authorized officer. An owner of such trap or buoy remains subject to appropriate civil penalties.

■ 9. In § 640.7, paragraph (g) is revised to read as follows:

§ 640.7 Prohibitions.

* * * * *

(g) Fail to return immediately to the water a berried spiny lobster; strip eggs from or otherwise molest a berried spiny lobster; or possess a spiny lobster, or part thereof, from which eggs, swimmerettes, or pleopods have been removed or stripped; as specified in § 640.21(a).

* * * * *

■ 10. In § 640.20, paragraph (b)(3)(iii) is removed, and paragraphs (b)(3)(i) and (b)(3)(ii) are revised to read as follows:

§ 640.20 Seasons.

* * * * *

(b) * * *

(3) * * *

(i) In the EEZ off Florida, the rules and regulations applicable to the possession of spiny lobster traps in Florida's waters in Rule 68B–24.005(3), (4), and (5), Florida Administrative Code, in effect as of June 1, 1994 (incorporated by reference, see § 640.29), apply in their entirety to the possession of spiny lobster traps in the EEZ off Florida. A spiny lobster trap, buoy, or rope in the EEZ off Florida, during periods not authorized in this paragraph will be considered derelict and may be disposed of in accordance with Rules 68B–55.002 and 68B–55.004 of the Florida Administrative Code, in effect as of October 15, 2007 (incorporated by reference, see § 640.29). An owner of such trap, buoy, or rope remains subject to appropriate civil penalties.

(ii) In the EEZ off the Gulf states, other than Florida, a spiny lobster trap may be placed in the water prior to the commercial and recreational fishing season, which is specified in paragraph (b)(1) of this section, beginning on August 1 and must be removed from the water after such season not later than April 5. A spiny lobster trap, buoy, or rope in the EEZ off the Gulf states, other than Florida, during periods not authorized in this paragraph will be considered unclaimed or abandoned property and may be disposed of in any manner considered appropriate by the Assistant Administrator or an authorized officer. An owner of such trap, buoy, or rope remains subject to appropriate civil penalties.

* * * * *

■ 11. In § 640.21, paragraphs (a), (c), and (d) are revised to read as follows:

§ 640.21 Harvest limitations.

(a) *Berried lobsters.* A berried (egg-bearing) spiny lobster in or from the EEZ must be returned immediately to the water unharmed. If found in a trap in the EEZ, a berried spiny lobster may not be retained in the trap. A berried spiny lobster in or from the EEZ may not be stripped of its eggs or otherwise molested. The possession of a spiny lobster, or part thereof, in or from the EEZ from which eggs, swimmerettes, or pleopods have been removed or stripped is prohibited.

* * * * *

(c) *Undersized attractants.* A live spiny lobster under the minimum size limit specified in paragraph (b)(1) of this section that is harvested in the EEZ by a trap may be retained aboard the harvesting vessel for future use as an attractant in a trap provided it is held in a live well aboard the vessel. No more than fifty undersized spiny lobsters, and one per trap aboard the vessel, whichever is greater, may be retained aboard for use as attractants. The live well must provide a minimum of ¾ gallons (1.7 liters) of seawater per spiny lobster. An undersized spiny lobster so retained must be released to the water alive and unharmed immediately upon leaving the trap lines and prior to one hour after official sunset each day. No more than fifty undersized spiny lobsters and one per trap aboard the vessel, may be retained aboard for use as attractants.

(d) *Tail separation.* (1) The possession aboard a fishing vessel of a separated spiny lobster tail in or from the EEZ as defined in § 640.1(b), is authorized only when the possession is incidental to fishing exclusively in the EEZ on a trip of 48 hours or more and a valid Federal tail-separation permit, and either a valid Federal vessel permit for spiny lobster or a valid Florida Saltwater Products License with a valid Florida Restricted Species Endorsement and a valid Crawfish Endorsement, as specified in § 640.4(a)(2), has been issued to and are on board the vessel.

(2) Spiny lobster must be landed either all whole or all tailed on a single fishing trip.

■ 12. In § 640.22, paragraphs (a)(3) and (b)(3)(i) are revised to read as follows:

§ 640.22 Gear and diving restrictions.

(a) * * *

(3) Poisons and explosives may not be used to take a spiny lobster in the EEZ as defined in § 640.1(b). For the purposes of this paragraph (a)(3), chlorine, bleach, and similar substances, which are used to flush a spiny lobster out of rocks or coral, are poisons. A vessel in the spiny lobster fishery may not possess on board in the EEZ any dynamite or similar explosive substance.

* * * * *

(b) * * *

(3) * * *

(i) For traps in the EEZ off Florida, by the Division of Law Enforcement, Florida Fish and Wildlife Conservation Commission, in accordance with the procedures in Rule 68B–24.006(7), Florida Administrative Code, in effect as of July 1, 2008 (incorporated by reference, see § 640.29).

* * * * *

■ 13. Section 640.25 is revised to read as follows:

§ 640.25 Adjustment of management measures.

In accordance with the framework procedure of the Fishery Management Plan for the Spiny Lobster Fishery of the Gulf of Mexico and South Atlantic, the Regional Administrator may establish or modify the following items: Reporting and monitoring requirements, permitting requirements, bag and possession limits, size limits, vessel trip limits, closed seasons, closed areas, reopening of sectors that have been prematurely closed, annual catch limits (ACLs), annual catch targets (ACTs), quotas, accountability measures (AMs), maximum sustainable yield (or proxy), optimum yield, total allowable catch (TAC), management parameters such as overfished and overfishing definitions, gear restrictions, gear markings and identification, vessel identification requirements, allowable biological catch (ABC) and ABC control rule, rebuilding plans, and restrictions relative to conditions of harvested fish (such as tailing lobster, undersized attractants, and use as bait).

■ 14. Add § 640.28 to read as follows:

§ 640.28 Annual catch limits (ACLs) and accountability measures (AMs).

For recreational and commercial spiny lobster landings combined, the ACL is 7.32 million lb (3.32 million kg), whole weight. The ACT is 6.59 million lb, (2.99 million kg) whole weight.

■ 15. Add § 640.29 to read as follows:

§ 640.29 Incorporation by reference.

(a) Certain material is incorporated by reference into this part with the approval of the Director of the Federal Register under U.S.C. 552(a) and 1 CFR part 51. These materials are incorporated as they exist on the date of approval and a notice of any change in these materials will be published in the **Federal Register**. This incorporation by reference was approved by the Director of the Office of the Federal Register in accordance with 5 U.S.C. 552(a) and 1 CFR part 51. These materials are incorporated as they exist on the date of approval and a notice of any change in these materials will be published in the **Federal Register**. All material incorporated by reference is available for inspection at the NMFS, Office of Sustainable Fisheries, Office of the Regional Administrator, 1315 East-West Highway, Silver Spring, MD; and the National Archives and Records Administration (NARA), Office of the Federal Register, 800 North Capitol Street NW., Suite 700, Washington, DC. For more information on the availability of this material at NARA, call (202) 741–6030 or go to *http://www.archives.gov/federal_resister/code_of_federal_regulations/ibr_locations.html.*

(b) Florida Administrative Code (F.A.C.): Florida Division of Marine Fisheries Management, 620 South Meridian Street, Tallahassee, FL 32399; telephone: (850) 488–4676; *http://laws.flrules.org.*

(1) F.A.C., Chapter 68B–24: Spiny lobster (crawfish) and slipper lobster, Rule 68B–24.002: Definitions, in effect as of July 1, 2008, IBR approved for § 640.4.

(2) F.A.C., Chapter 68B–24: Spiny lobster (crawfish) and slipper lobster, Rule 68B–24.005: Seasons, in effect as of June 1, 2004, IBR approved for § 640.20.

(3) F.A.C., Chapter 68B–24: Spiny lobster (crawfish) and slipper lobster, Rule 68B–24.006: Gear: Traps, Buoys, Identification Requirements, Prohibited Devices, in effect as of July 1, 2008, IBR approved for § 640.6 and § 640.22.

(4) F.A.C., Chapter 68B–55: Trap retrieval and trap debris removal, Rule 68B–55.002: Retrieval of Trap Debris, in effect as of October 15, 2007, IBR approved for § 640.6 and § 640.20.

(5) F.A.C., Chapter 68B–55: Trap retrieval and trap debris removal, Rule 68B–55.004: Retrieval of Derelict and Traps Located in Areas Permanently Closed to Trapping, in effect as of October 15, 2007, IBR approved for § 640.6 and § 640.20.

(c) Florida Statute: Florida Division of Marine Fisheries Management, 620 South Meridian Street, Tallahassee, FL 32399; telephone: (850) 488–4676; *http://www.leg.state.fl.us/Statutes/index.cfm.*

(1) Florida Statutes, Chapter 379: Fish and Wildlife Conservation, Part VII: Nonrecreational Licenses, Section 379.367: Spiny lobster; regulation, 379.367, in effect as of June 1, 1994, IBR approved for § 640.6.

(2) [Reserved]

[FR Doc. 2011–31025 Filed 12–1–11; 8:45 am]

BILLING CODE 3510–22–P

DEPARTMENT OF COMMERCE

National Oceanic and Atmospheric Administration

50 CFR Part 635

[Docket No. 110520295–1659–02]

RIN 0648–BA64

Atlantic Highly Migratory Species; Vessel Monitoring Systems

AGENCY: National Marine Fisheries Service (NMFS), National Oceanic and Atmospheric Administration (NOAA), Commerce.

ACTION: Final rule.

SUMMARY: The National Marine Fisheries Service (NMFS) is finalizing requirements for fishermen to replace currently required Mobile Transmitting Unit (MTU) Vessel Monitoring System (VMS) units with Enhanced Mobile Transmitting Unit (E–MTU) VMS in Atlantic HMS fisheries. The key difference between MTU and E–MTU VMS units is that the E–MTU VMS units are capable of two-way communication. The purpose of this final action is to facilitate enhanced communication with HMS vessels at sea, provide HMS fishery participants with an additional means of sending and receiving information at sea, ensure that HMS VMS units are consistent with the current VMS technology and type approval requirements that apply to newly installed units, and to provide NMFS enforcement with additional information describing gear onboard and target species. This rule affects all HMS pelagic longline (PLL), bottom longline (BLL), and shark gillnet fishermen who are currently required to have VMS onboard their vessels.

DATES: This final rule is effective on January 1, 2012. *Implementation dates:* As of January 1, 2012, vessel owners

and/or operators must use a qualified marine electrician when installing an E–MTU VMS unit on a vessel. By March 1, 2012, vessel owners and/or operators must have an E–MTU VMS unit installed on their vessel and must use the unit to provide position reports, declare target species and fishing gear possessed onboard two hours prior to departing on a fishing trip, and provide notification of landing three hours in advance of returning to port.

ADDRESSES: Supporting documents, including the Regulatory Impact Review, Final Regulatory Flexibility Analysis (RIR/FRFA), and compliance guides are available from Michael Clark, Highly Migratory Species (HMS) Management Division, Office of Sustainable Fisheries (F/SF1), NMFS, 1315 East West Highway, Silver Spring, MD 20910. These documents and others, such as the Fishery Management Plans described below, also may be downloaded from the HMS Web site at *http://www.nmfs.noaa.gov/sfa/hms/.* A list of E–MTU VMS units that are currently type approved for use in Atlantic HMS fisheries is available on the NMFS Office of Law Enforcement Web site at *http://www.nmfs.noaa.gov/ole/docs/2011/07/noaa_fisheries_service_type_approved_vms_units.pdf.* A current list of type approved units and other information may also be obtained by contacting the VMS Support Center at (phone) (888) 219–9228, (fax) (301) 427–0049, *ole.helpdesk@noaa.gov*, or write to NMFS Office for Law Enforcement, VMS Support Center, 8484 Georgia Avenue, Suite 415, Silver Spring, MD 20910.

FOR FURTHER INFORMATION CONTACT: For information on this rule and requirements for Atlantic HMS fisheries contact, Michael Clark (phone: (301) 427–8503; fax: (301) 713–1917).

SUPPLEMENTARY INFORMATION: Atlantic HMS are managed under the dual authority of the Magnuson-Stevens Fishery Conservation and Management Act (MSA) and the Atlantic Tunas Convention Act (ATCA). Under the MSA, NMFS must ensure consistency with 10 National Standards and manage fisheries to maintain optimum yield, rebuild overfished fisheries, and prevent overfishing. Under ATCA, the Secretary of Commerce is required to promulgate regulations, as necessary and appropriate, to implement measures adopted by the International Commission for the Conservation of Atlantic Tunas (ICCAT). The implementing regulations for Atlantic HMS are at 50 CFR part 635.

Background

Prior to January 2008, NMFS approved for use several MTU Vessel Monitoring System (VMS) units for use in fisheries nationwide, including the HMS fishery (68 FR 11534; March 11, 2003). On January 31, 2008, NMFS published in the **Federal Register** (73 FR 5813) a type approval notice listing the specifications for approved MTU VMS, including a requirement for two-way communication. In that notice, NMFS stated that ''[p]reviously installed MTUs approved under prior notices will continue to be approved for the remainder of their service life'' and that new installations ''must comply with all of the requirements'' of the notice, including the requirement to have two-way communication capability.

On June 21, 2011, NMFS published a proposed rule (76 FR 36071) to require replacement of currently required Mobile Transmitting Unit (MTU) Vessel Monitoring System (VMS) units with Enhanced Mobile Transmitting Unit (E–MTU) VMS units in Atlantic HMS fisheries; implement a declaration system that requires vessels to declare target fishery and gear type(s) possessed on board; and require that a qualified marine electrician install all E–MTU VMS units.

NMFS considered two alternatives in the proposed rule. Alternative One, the no action alternative, would maintain the existing VMS requirements in Atlantic HMS fisheries. Under Alternative Two, vessels in the HMS fishery with an MTU (as opposed to an E–MTU) installed would not be allowed to wait until the end of the installed MTU's service life (as had been provided for in the January 31, 2008, **Federal Register** notice (73 FR 5813)) but instead, would be required to replace the MTU with a NMFS type approved E–MTU and to have the new unit installed by a qualified marine electrician. This alternative would also implement a fishery declaration system where vessels would declare their target species and gear type(s) possessed onboard, as well as require vessels to provide advanced notice of departure and landing. Vessels with type approved E–MTU units already installed would not need to take any action. The proposed rule contained details regarding the alternatives considered and a brief summary of the recent management history. Those details are not repeated here.

This final rule finalizes the provisions proposed in the June 21, 2011, rule. The purpose of this final action is to facilitate enhanced communication with HMS vessels at sea, provide HMS fishery participants with a means of sending and receiving information at sea, ensure that HMS VMS units are consistent with the current VMS technology and type approval requirements that apply to newly installed units, and to provide NMFS enforcement with additional information describing gear onboard and target species.

As of January 1, 2012, all E–MTU VMS units must be installed by a qualified marine electrician. This is to ensure that E–MTU VMS units are installed properly.

As of March 1, 2012, vessel owners and/or operators must have an E–MTU VMS unit installed on their vessel and must use the unit to provide position reports, declare target species and fishing gear possessed onboard two hours prior to departing on a fishing trip, and provide notification of landing three hours in advance of returning to port. The March 1, 2012, effective date provides about 90 days to have E–MTU VMS units installed and operational. NMFS extended the standard 30-day delay in effectiveness here to provide sufficient time for coming into compliance with the E–MTU VMS requirements while still providing an opportunity to take advantage of reimbursement funds.

Under the requirements of this final rule, VMS units that are approved by NMFS as meeting the E–MTU type approval specifications (73 FR 5813; January 31, 2008), including two-way communication and the ability to send and receive free-form Internet email text messages and electronic forms, will meet the requirements of this rule. Further, VMS units that were approved by NMFS prior to January 2008, but that comply with all of the requirements of the E–MTU type approval specifications notice (73 FR 5813; January 31, 2008), including two-way communication and the ability to send and receive free-form Internet email text messages and electronic forms, will meet the requirements of this rule. See **ADDRESSES** above for information about viewing or obtaining a list of E–MTU VMS units that are currently type approved for use in Atlantic HMS fisheries. With this final rule, three MTU VMS units approved by NMFS prior to January 2008 for use in the HMS fishery—Trimble Galaxy 7001 and 7005 and Thrane & Thrane Sailor VMS Silver (68 FR 11534; March 11, 2003)—will not meet the requirements of this rule because these units do not possess the capability for two-way communications or the ability to send and receive free-form Internet email text messages and electronic forms. Vessels with one of

these three units installed will be required to replace the unit with one of the approved E–MTUs by March 1, 2012.

Comments and Responses

NMFS received four written and numerous verbal comments from non-governmental organizations, fishermen, and other interested parties on the proposed rule. NMFS heard comments from constituents at five public hearings. A summary of the comments received on the proposed rule during the public comment period is provided below with NMFS' response. All written comments submitted during the comment period can be found at *http://www.regulations.gov/* by searching for RIN 0648–BA64.

E–MTU VMS Comments

Comment 1: The replacement of MTUs with E–MTUs will enhance enforcement by requiring the best available technologies for tracking and communicating with fishing vessels.

Response: Requiring that vessels use E–MTUs to provide information on the type of gear possessed onboard and the target species will provide valuable information to NMFS enforcement. This information will aid in determining which time/area closures and other regulations apply to a given vessel on a given trip and will reduce the need to send enforcement vessels or aircraft to discern an individual vessel's activity. Coupled with the hourly location reports and the ability to engage in two-way communication with vessels, E–MTU VMS will be a useful tool to track and communicate with vessels.

Comment 2: The proposed rule does not demonstrate a compelling need for requiring E–MTUs in the PLL fishery. E–MTUs are not needed as a safety tool because vessels already have electronic emergency communication equipment and MTUs already have the capability of sending distress messages. In contrast, NMFS also heard that the use of E–MTUs can increase safety and provide a way for owners to monitor what their boats are doing on the water.

Response: E–MTUs are needed to have reliable, enhanced communication with HMS vessels at sea, provide HMS fishery participants with a means of sending and receiving information at sea, ensure that all HMS VMS units are consistent with the current VMS technology and type approval requirements that apply to newly installed units, and provide NMFS enforcement with additional information describing gear onboard and target species onboard to support fishery management measures including compliance with time/area closures. Furthermore, one of the issues with existing MTU VMS units is their elevated ''failure'' rates. The two-way communication capability and improved reliability of E–MTUs provide the added benefits of being capable of sending distress messages and/or providing context and additional information prior to sending a distress message. Additionally, the new E–MTU units provide a way for the vessel owner and/or operator to determine if the unit is working; the previously required MTU VMS units did not have this functionality.

The E–MTU VMS units are not intended as a replacement for existing electronic emergency communication equipment, such as Emergency Position Indicating Radio Beacons (EPIRBs) or other emergency equipment that have the capability of sending a distress message. While some of the existing MTUs have the capability of sending distress messages, most do not have this capability. The ability to engage in two-way communication between vessel owners on shore and their operators at sea could facilitate troubleshooting mechanical issues, allow updates on market conditions/prices for seafood products, and could provide owners with additional peace of mind.

Comment 3: The proposed rule does not demonstrate a need for vessels to declare the target fishery and gears possessed onboard, and NMFS should not require these declarations because they are unnecessary and redundant with other reporting requirements.

Response: In HMS fisheries, many of the management measures, including closed areas, are applicable to certain gear types and some only apply at certain times of year. Providing a declaration that includes the gear possessed onboard prior to embarking on a fishing trip is useful for NMFS enforcement officials when they are evaluating which management measures apply to a particular vessel during a particular trip.

Comment 4: The need for requiring E–MTUs in the PLL fishery does not justify the financial expense and burden that the requirement will have on fishermen.

Response: The enhanced communication capability of E–MTUs will facilitate enhanced communication with HMS vessels at sea, provide HMS fishery participants with a means of sending and receiving information at sea, ensure that all HMS VMS units are consistent with the current VMS technology and type approval requirements that apply to newly installed units, and to provide NMFS enforcement with additional information describing gear onboard and target species onboard to support fishery management measures including compliance with time/area closures.

Fishing vessels possessing pelagic longline gear onboard are already required to have a functioning VMS onboard. Older MTUs are not supported by the current NMFS VMS type requirements, thus when units are replaced, they must be replaced with E–MTUs regardless of this final rule. Experience using E–MTU VMS units in other fisheries indicates that they require less maintenance than MTU VMS units. Installing the E–MTU VMS units may reduce maintenance costs and lost fishing time because of system failure compared to MTU VMS units.

Currently, the Agency has reimbursement funds available that vessel owners may receive to offset the costs of purchasing an E–MTU VMS unit. Reimbursement funds are subject to availability. The additional cost of two-way reporting and installation of E–MTUs by a qualified marine electrician on average is expected to equal $745/vessel (including $400 for installation) in the first year. Installation costs will vary depending on proximity to a qualified marine electrician. Estimates for transmission costs (declaration and location reports) represent the maximum financial burden that could be incurred by vessels because it is based on the maximum amount of fishing time vessels could be active. However, vessels often fish less frequently depending on seasons, fish availability, moon phase, and opportunities in other fisheries so actual costs may be less. The Agency is mitigating the economic impacts to participants by making some reimbursement funds available for E–MTU units and by delaying the implementation date to provide fishermen with additional time to comply with the requirements. Vessel owners that participate in other fisheries deploying the same fishing gear may already be required to use E–MTU VMS; therefore, the economic impacts to some participants may be negligible.

Comment 5: The requirement to use E–MTUs in the PLL fishery disadvantages U.S. fishermen compared to foreign competitors. The cumulative effect of this and other regulations on the PLL fishery will result in a bankrupt fishery.

Response: VMS requirements are currently in place in many U.S. fisheries and are also required by Regional Fisheries Management Organizations. In the United States, requirements to use VMS for PLL vessels were implemented

in response to requirements of other domestic laws, including the MSA, Endangered Species Act (ESA), and the Marine Mammal Protection Act (MMPA). In addition, ICCAT has a VMS requirement for contracting parties. The Agency is reducing the economic impacts of this rule on fishermen by delaying the implementation date and by providing some reimbursement funds for the E–MTU units.

Comment 6: Civil liberties are violated by mandating the use of vessel tracking devices and requiring a separate line of communication using E–MTUs only compounds that violation.

Response: VMS units are required only of people who have sought out an HMS permit, the possession and use of which comes with certain obligations and responsibilities under law. Maintaining a valid HMS permit requires vessel owners and operators to comply with all applicable regulations for participation in HMS fisheries. VMS units are a tool to ensure compliance with regulations in HMS fisheries and have been required since 2003. The position and certain other data collected from VMS are subject to MSA confidentiality provisions and protections, which prevent inappropriate disclosure (*see* 18 U.S.C. 1881a(b)). VMS requirements are currently in place in many U.S. fisheries and are also required by Regional Fisheries Management Organizations.

Comment 7: Some small vessels may not have enough room to mount an E–MTU.

Response: The Agency is aware of this issue, particularly for shark vessels fishing with bottom longline or gillnet gear that are subject to VMS requirements. There are several models of E–MTU VMS units available that range in size, some of which are quite small. Often the largest or most bulky part of the E–MTU VMS system is the screen or messaging terminal; however, this depends on the model. It may be possible to find a screen that is smaller in size and may be more appropriate for mounting on smaller vessels.

Comment 8: NMFS should allow the declaration of target species and fishing gears possessed to be made by phone. Some small fishing vessels remain within cell phone range throughout their fishing trip. Allowing declaration by phone could remove the need for E–MTUs for these vessels and could result in less additional burden than requiring E–MTUs.

Response: E–MTU VMS terminals represent a more reliable means of communication than cellular phones because they use satellites rather than cell towers as the principle means of transmitting data. Furthermore, vessels need to provide position reports every hour when they are away from port, and cell phones cannot consistently provide that capability. The E–MTU VMS units represent a more reliable means of providing position reports and also allow two-way communication in the event that NMFS enforcement needs to contact a vessel concerning an emergency closure, adverse weather, or other issue.

Comment 9: Gulf of Mexico reef fish vessels are already using E–MTUs; however, the Boatracs model is not authorized for use in HMS fisheries. Will vessels that also have shark permits need to replace these units? If so, the small businesses that own these vessels may have difficulty purchasing an additional E–MTU.

Response: NMFS administers a process for updating E–MTU type approval for specific fisheries. NMFS is investigating the possibility of Boatracs E–MTUs meeting NMFS type approval for Atlantic HMS fisheries. The Agency will provide updates regarding additional units being added to the list of type approved devices as necessary.

Comment 10: Will Gulf of Mexico vessels that have already been reimbursed for an E–MTU that is not type approved for Atlantic HMS fisheries be eligible for reimbursement when an E–MTU required for participation in Atlantic HMS fisheries is installed?

Response: Vessels currently are eligible to receive reimbursement for the costs of an E–MTU that satisfies the type approval requirements for the fishery. Some E–MTUs that are type approved for use in non-HMS Gulf of Mexico fisheries are also type approved for Atlantic HMS fisheries. Generally, the owner of a vessel is only eligible for reimbursement for one E–MTU per vessel. Vessel owners should contact NMFS enforcement if they have questions about VMS installation and reimbursement procedures.

Comment 11: The use of E–MTUs can increase safety and provide a way for owners to monitor what their boats are doing on the water.

Response: NMFS agrees for reasons outlined in the response to comment number 2 above, but reiterates that the E–MTU VMS units are not intended as a replacement for Emergency Position Indicating Radio Beacons (EPIRBs) or other emergency equipment that have the capability of sending a distress message.

Comment 12: NMFS should not have reporting requirements beyond those required by ICCAT.

Response: NMFS implements VMS requirements pursuant to federal laws, including the MSA, ESA, and MMPA, and also taking into consideration relevant ICCAT recommendations.

Comment 13: NMFS is displaying favoritism by requiring E–MTUs for the purpose of increasing safety if they do not implement similar requirements across all Atlantic HMS fisheries.

Response: NMFS is not requiring E–MTUs solely to increase safety. The purpose of this final rule is to enhance communication capability in the Atlantic HMS fisheries that are currently required to use VMS. When a vessel declares the type of gear possessed onboard and target species, useful information is provided to NMFS enforcement, which enables enforcement to determine which regulations apply. Other potential benefits of using E–MTU VMS at sea instead of MTUs include improved reliability, reduced maintenance costs, and two-way communication (email messages) if a vessel were experiencing conditions that may endanger the safety of the vessel or the crew during fishing activities. E–MTU VMS units are not intended to replace EPIRBs or other safety equipment that can be used to transmit a distress signal and vessel position information.

Comment 14: An upgrade to E–MTUs should only be required if the MTU on a vessel is old.

Response: E–MTUs provide enhanced communication that will support fishery management measures. When vessels declare the fishing gear onboard and target species using an E–MTU, NMFS enforcement officials will know which regulations apply to that particular vessel during that particular trip. MTUs do not provide this type of enhanced communication and are only capable of providing position information. The E–MTU VMS units also provide vessel operators with confirmation that the unit is functioning properly, which was not always possible with MTU VMS units.

Comment 15: The enhanced units have a level of complexity far exceeding the old systems. This may result in an increased rate of system failure. When E–MTUs fail, the cost of shipping them to service agents has been an economic and logistical burden. The lost fishing time while waiting for repairs has been costly.

Response: NMFS has not experienced increased system failures with the E–MTUs that are currently type approved in other fisheries. Rather, NMFS enforcement reports that the rate of system failure is less than that of MTUs. NMFS expects that there will be

a reduction in lost fishing time as a result of system failure at port or at sea by requiring that E–MTU VMS units be installed by a qualified marine electrician in HMS fisheries.

Hail-Out and Hail-In Declaration Comments

Comment 16: NMFS should require vessels in the Atlantic HMS fleet to declare their target fishery and gear two hours before leaving port and provide three hours of advanced notice of landing.

Response: NMFS agrees. Requiring the declaration of fishing gear possessed and target species facilitates enforcement and monitoring by allowing NMFS enforcement to know what fisheries regulations, such as closed areas, apply for the vessel during a given fishing trip. The final rule will require that vessels declare target species and fishing gear onboard two hours prior to leaving port and notify the Agency of their intended landing location three hours prior to returning to port.

Comment 17: Fishermen cannot declare their target catch two hours in advance of their fishing trip because they do not know what they are going to catch ahead of time. It should be sufficient that NMFS knows HMS are generally targeted by a PLL vessel that is permitted in Atlantic HMS fisheries when the vessel departs on a fishing trip. This basic information is known by the VMS track provided by a MTU.

Response: It is the Agency's intention for vessel operators to declare the type of fishing gear possessed and target catch by species groups to facilitate the effectiveness of fishery management measures through improved enforcement efforts. The Agency realizes that fishing is opportunistic and it may not be possible to list all species that may be encountered and retained on any particular trip. There may be instances where the vessel possesses multiple gear types and would target (and declare) multiple species groups, which would be acceptable. The E–MTU VMS units have the capability to report all of this information. This information will augment the location information provided by VMS units to discern which fisheries regulations are applicable.

Comment 18: It is not practical for fishing vessels that make trips less than three hours in length to hail in three hours in advance of landing.

Response: The hail-in requirement is necessary to facilitate enforcement of fishery regulations by providing adequate time for an enforcement agent to meet a vessel at the dock. Vessels that anticipate a fishing trip less than three hours in length must, prior to departure, provide a hail-in declaration stating where they intend to return to port at least three hours in advance of landing. If the vessel's fishing trip deviates from the original declaration, then a subsequent hail-in message can be sent using the E–MTU unit.

Comment 19: NMFS should keep the amount of required text characters in a message to a minimum because of the expense of these messages.

Response: NMFS anticipates that text messages will be minimal in length. Most, if not all communications, will occur via electronic forms that are filled with the use of inexpensive drop-down menus. Costs for transmitting information using the E–MTU are minimal and are approximately $0.06 per message (both sent and received). Messaging cost varies slightly by service provider.

Comment 20: If NMFS requires hail-in notification, any confirmation from NMFS back to the vessel needs to occur quickly. NMFS should not expect boats to sit at idle while waiting for a confirmation code before they can tie up to the dock. This situation currently occurs in southeast reef fish fisheries.

Response: This final rule does not require that vessels obtain a hail-in confirmation number from NMFS prior to landing and the vTrack system does not contain a mechanism to send back a specific confirmation number. Rather, vessels will receive an on-screen confirmation from the vendor that the prelanding notice was successfully transmitted, which should occur without delay.

Comment 21: NMFS should allow changes to the declaration because fishermen sometimes have incidental catches of species not listed on their initial declaration.

Response: Declaration of target species will be for species groups and is not intended to capture all species that a vessel lands. If the vessel switches to a gear type or species group not reported on the initial declaration, another declaration must be submitted before fishing begins.

E–MTU Reimbursement Comments

Comment 22: Requiring vessel owners to outlay the cost of an E–MTU (up to $3,100) before the money is reimbursed is a real hardship.

Response: NMFS understands that the initial outlay of the cost of an E–MTU and installation by a qualified marine electrician is burdensome for fishermen. In order to mitigate the economic impacts, NMFS is delaying implementation of the requirement to purchase and install an E–MTU until March 1, 2012, in order to provide time for fishermen to save for this initial outlay of money.

Comment 23: The allowable reimbursement amount of $3,100 is not enough money to reimburse fishermen fully for the total cost of this requirement. NMFS should make reimbursement funds available for any fees incurred by breaking existing contracts.

Response: The reimbursement amount of up to $3,100 should cover the cost of the least expensive E–MTU that meets the NMFS type approval. All of the costs associated with existing MTU units were incurred by PLL fishermen. Consistent with existing policy, NMFS will not pay for installation or any subsequent transmission costs. Reimbursement of the cost of an E–MTU will help fishermen with the rule's financial burden. Reimbursement is not available to cover any cost related to changes to contracts incurred by vessels transitioning to E–MTU VMS. NMFS is not aware of any fees being incurred by participants as a result of switching from MTU to E–MTU VMS units.

Comment 24: NMFS should ensure that sufficient funding is available to reimburse all eligible fishery participants for an E–MTU.

Response: Reimbursement funds are available on a first-come, first-served basis as long as the funds last. In recent years, the reimbursement fund has been adequately funded to cover all eligible requests; however, this funding level is not guaranteed.

Delayed Implementation of E–MTU Requirement

Comment 25: NMFS should make the rule effective at a time when fishing activity is slowest so the burden on fishermen is the least.

Response: This final rule is expected to publish and be implemented during the winter of 2012, which coincides with a period of reduced fishing activity for most Atlantic HMS fisheries affected by the regulation.

Comment 26: NMFS should allow up to 6-months for a phased-in period of implementation. Delayed implementation of the E–MTU requirement would ease the economic burden by allowing fishermen more time to save money for the unit and could prevent manufacturer's inventories of E–MTUs from becoming depleted and the filling of orders from being delayed. Delayed implementation would also allow existing MTU service contracts to expire.

Response: NMFS is issuing this final rule with a delayed effective date of

about 90-days in order to minimize the financial burden to fishermen as a result of compliance with the new regulation. The selected delayed effective dates coincide with a period of reduced fishing activity for many HMS participants affected by the new requirement. A delayed effective date balances the need for fishermen to save money for the initial outlay to procure the unit with the need to expedite the requirement so fishermen are ensured access to the reimbursement. A 6-month phase in period, as suggested by the public comment, would increase the likelihood that reimbursement funds are not available to fishermen, thus was not chosen. The delayed implementation date would also allow vendors of type approved E–MTUs to ensure they have an adequate supply of units in stock. NMFS has contacted vendors of type approved E–MTUs and an adequate supply exists for Atlantic HMS participants affected by this requirement.

Installation by a Qualified Marine Electrician Comments

Comment 27: Installation by a qualified marine electrician will minimize the chance of equipment failure at sea.

Response: NMFS agrees. One purpose of requiring installation by a qualified marine electrician is to ensure the reliability of E–MTUs and the information they provide to NMFS.

Comment 28: It is difficult to believe that self-installation has been a frequent cause of VMS unit failure instead of mechanical malfunction of the unit.

Response: NMFS enforcement has documented instances of VMS unit failure due to improper installation by an unqualified person. Not all persons associated with a vessel that might install an E–MTU are familiar with the specific electronic and mechanical requirements of E–MTU installation. Installation of E–MTUs by a qualified marine electrician is necessary to ensure the units function properly. Units that fail at sea may impact fishing activities and result in lost revenues because vessels may need to return to port during a fishing trip to deal with VMS issues.

Comment 29: Requiring that the enhanced units be installed by a qualified marine electrician is not practical because there are a limited number of qualified marine electricians with experience installing E–MTUs and because of the long distance that a qualified marine electrician would have to travel in some areas. The cost of travel for the installer will be more than the $200.00 estimated in the proposed rule. NMFS should consider having VMS units installed by a capable, but unspecified, technician.

Response: By requiring E–MTU installation by a qualified marine electrician, NMFS intends to provide some flexibility for fishermen in choosing a business that is relatively convenient while ensuring that it is someone qualified to install E–MTU VMS units. It is important that someone familiar with these units and marine electronics complete the installation and fill out the VMS installation checklist because the checklist provides NMFS enforcement with important information concerning the installation and results in improved troubleshooting capability should problems occur. NMFS revised the estimate for an average E–MTU installation by a qualified marine electrician to $400.00 instead of $200.00, which was originally analyzed in the Initial Regulatory Flexibility Analysis and proposed rule based on public comment.

General VMS Comments

Comment 30: Fishermen should not be held responsible for any VMS equipment failure because of the complexity of the units.

Response: NMFS disagrees. Fishermen that are required to use VMS are responsible for ensuring that their units are functioning properly during fishing activities just as they would be for any other fishing equipment on their vessels. Because of the complexity of the units and the problems that may occur subsequent to installation by an inexperienced person, NMFS is requiring that E–MTU units be installed by a qualified marine electrician.

Comment 31: NMFS should not increase use of electronics to enforce regulations.

Response: Enforcement of fisheries regulations using electronic tools such as VMS is a proven, cost effective method. The requirements of this final rule will enhance communication between fishing vessels and NMFS to strengthen VMS as an enforcement tool with benefits to both NMFS, through improved data availability, and fishermen, through increased reliability and increased ability to communicate with enforcement, thereby avoiding compliance issues. The enhanced reliability and two-way communication capabilities of E–MTU VMS may also be an effective tool for improving safety at sea because communication between fishing vessels and NMFS enforcement/and Coast Guard (describing the vessels' circumstances) can be initiated prior to the need to send a distress signal. However, E–MTU VMS units are not intended as a replacement for Emergency Position Indicating Radio Beacons (EPIRBs) or other emergency equipment that have the capability of sending a distress message.

Comment 32: VMS equipment is not made for boats and regularly fails at sea.

Response: The E–MTU units that are type approved for use in Atlantic HMS fisheries are designed and marketed exclusively for use in the marine environment. VMS has proven to be an effective tool for monitoring vessel position and two-way communication. VMS is used in many other federally managed fisheries in the United States and throughout the world. NMFS enforcement has documented numerous instances where the MTU VMS currently being used in HMS fisheries have failed at sea. The E–MTU units themselves have demonstrated that they are more reliable at sea than the MTU units. Furthermore, requiring that installation is conducted by a qualified marine electrician is also expected to improve performance.

Comment 33: Who is authorized to repair E–MTUs? Nearly all of the type approved units are manufactured abroad (Norway, Denmark, and Canada). Will fishermen be burdened by having to get their E–MTUs serviced at foreign locations?

Response: Specific information concerning E–MTU service and repair should be attained through the authorized dealer from which the original unit was purchased. The location and availability of service and repair companies varies by VMS manufacturer; however, the experience in other federally managed fisheries is that some units can be repaired by technicians within the United States without the need to send units to foreign locations. In some cases, E–MTUs may have software repairs conducted remotely via two-way communication, which can reduce cost and repair time. The Agency is preparing a compliance guide that will provide additional information on the locations of authorized dealers and service providers.

Comments Outside the Scope of the Rule

Comment 34: NMFS needs to re-examine the rationale for prohibiting fishing when a vessel's VMS unit is not working and the vessel is far from a closed area.

Response: A properly operating VMS is required and necessary to verify the location of a vessel, regardless of its location, to ensure that it is not fishing in closed areas.

Comment 35: NMFS should expand this rule to implement reporting requirements, observer coverage, increased enforcement, and VMS requirements in the Atlantic Tunas General category fishery commensurate with requirements and level of enforcement in the PLL fishery.

Response: Regulations are in place for the Atlantic Tunas General permit fishery including, but not limited to, permitting, authorized gears, retention and size limits, and reporting requirements. In the Gulf of Mexico, Atlantic Tunas General permit holders cannot engage in directed fishing for bluefin tuna and possession of bluefin tuna is not authorized. Therefore, NMFS determined that additional requirements for Atlantic Tunas General Category permitted vessels within the scope of this final rule are not necessary at this time.

Comment 36: ICCAT recommendations require VMS on vessels greater than 24 m Length Overall (LOA), yet NMFS requires VMS on vessels according to the gear they possess and not vessel length. Implementing VMS requirements in this way excludes the largest percentage of U.S. Atlantic HMS vessels and selectively enforces ICCAT VMS requirements on a small percentage of commercial HMS permit holders.

Response: VMS requirements, implemented under the authority of the MSA, facilitate enforcement of closed areas in the U.S. EEZ for certain gear types (PLL, BLL, and gillnet) at certain times of year (specific to gear type and location). These closed areas apply to vessels in possession of a certain gear type regardless of the vessel size or length. NMFS may consider additional monitoring requirements for Atlantic HMS fisheries in the future.

Comment 37: NMFS should require E–MTUs to be used by Atlantic HMS-permitted vessels that use gears other than PLL, BLL, and gillnet so that two-way communications and the ability for real-time reporting of landings will be in place throughout Atlantic HMS fisheries.

Response: NMFS is considering alternative methods for improving the timeliness and quality of information collected throughout Atlantic HMS fisheries.

Comment 38: In order to increase safety at sea, NMFS should allow PLL vessels to fish in closed areas along the east coast during winter months when sea conditions make fishing farther from shore more dangerous. NMFS should also make the PLL closed areas smaller so that they are easier to enforce.

Response: This comment is not germane to this rulemaking. However, NMFS continues to evaluate the effectiveness of time/area closures and their impacts, and may make changes, if appropriate.

Comment 39: NMFS should consider using E–MTUs in lieu of observer coverage in order to get better scientific data.

Response: VMS units and observers are both important tools in fisheries management; however, they provide different information to fishery managers and enforcement officials. VMS units are primarily an enforcement tool and provide important information about location and allow self-reported fisheries data from vessels to fisheries enforcement officers. Observers are not used for enforcement of fisheries regulations; rather, they provide valuable information about catch, discards, effort, and fishing gear (among other things) to fisheries managers. NMFS may consider options for using E–MTU VMS to report landings or discards in a future rulemaking.

Comment 40: NMFS should not have comment periods shorter than 60 days, with the exception of emergency actions, to allow fishermen ample time to participate in the regulatory process.

Response: NMFS strives to provide adequate time for fishermen to provide public comments consistent with legal obligations. Public hearings are scheduled at locations that are designed to be accessible to members of the public, including fishermen, who are interested in the subject matter. Comments may be submitted in person at public hearings, electronically via *http://www.regulations.gov,* via fax, or by mail.

Comment 41: NMFS should reduce the frequency of VMS reports from 24 to no more than six per day.

Response: The current frequency of VMS reports (1 per hour) has been implemented to monitor closed or gear-restricted areas. The required frequency is necessary to provide NMFS enforcement with enough information to substantiate what fishing gear is being used based on vessel track, location of the fishing gear, and location of the vessel in relation to closed areas. If the frequency of reporting is reduced, then it may limit NMFS enforcement's ability to monitor fishing activities adjacent to closed areas, thus compromising the effectiveness of closed areas.

Changes From the Proposed Rule

The estimates of costs associated with installation of E–MTU VMS units increased from $200 to $400 based on public comment on the Initial Regulatory Flexibility Analysis. A minor change to the paragraph at § 635.69(a) has been made to better describe what a NMFS-approved E–MTU VMS is and to reference the type approval requirements that were published in the **Federal Register.** A minor change to the paragraph at § 635.69 (a) has been made to clarify the implementation dates of this final rule.

Classification

The NMFS AA has determined that this final action is consistent with the Magnuson-Stevens Act, 2006 Consolidated Atlantic HMS FMP and its amendments, ATCA, and other applicable law.

This final rule has been determined to be not significant for purposes of Executive Order 12866.

This final rule would modify a collection-of-information requirement associated with VMS use in Atlantic HMS fisheries subject to the Paperwork Reduction Act (PRA), and that has been approved by the Office of Management and Budget (OMB) under control number (0648–0372). The modifications are subject to review and approval by OMB under the Paperwork Reduction Act (PRA). There would be 329 vessel owners (respondents) that may be affected by this collection. Public reporting burden for having the E–MTU VMS units installed by a qualified marine electrician (4 hours, one-time), submitting a checklist (completed by a qualified marine electrician) (5 minutes, one-time), and providing declaration reports before and after leaving port (5 minutes/declaration, ongoing) is estimated to result in an estimated total annual burden of 4,452 hours in the first year. A total of 48,358 responses (checklists and declaration reports) would be collected in the first year. The annual burden would decrease in subsequent years because the installation and submission of a completed checklist would be one-time burdens. Table 1 provides estimates of the number of participants affected by this collection and the financial burden associated with this action in year one and subsequent years.

Environmental impacts are not expected and the action is within the scope of that previously analyzed when existing VMS requirements were implemented (64 FR 29090; May 28, 1999; and 68 FR 74746; December 24, 2003). This action would not directly affect fishing effort, quotas, fishing gear, authorized species, or interactions with threatened or endangered species.

NMFS has prepared a Final Regulatory Flexibility Analysis (FRFA), as required by 5 U.S.C. Section 604 of

the Regulatory Flexibility Act, to analyze the economic impacts that this final rule will have on small entities. A description of the final action, why it is being implemented, and the legal basis for this action are contained in the preamble to this proposed rule. A summary of the analysis follows. A copy of the complete analysis is available from NMFS (see **ADDRESSES**).

Section 604(a)(1) of the Regulatory Flexibility Act requires that the Agency describe the need for, and objectives, of the final rule. The purpose of this final rule is, consistent with the Magnuson-Stevens Act and the 2006 Consolidated HMS FMP and its amendments, to aid NMFS in monitoring and enforcing fisheries regulations, including those implemented at 50 CFR part 635. Specifically, this final action will facilitate enhanced communication with HMS vessels at sea, provide HMS fishery participants with a means of sending and receiving information at sea, ensure that HMS VMS units are consistent with the current VMS technology and requirements used in other U.S. VMS monitored fisheries, and to provide NMFS enforcement with additional information describing gear onboard and target species.

Section 604(a)(2) requires a summary of the significant issues raised by the public comments in response to the Initial Regulatory Flexibility Analysis (IRFA) and a statement of any changes made in the proposed rule as a result of such comments. The Agency received comments concerning the Initial Regulatory Flexibility Analysis stating that the Agency's estimate of $200 for installation of E–MTU VMS units by a qualified marine electrician was not appropriate for vessels that may be docked at remote ports far from larger population centers because of the travel time necessary for a qualified marine electrician. As a result, the estimate for installation of E–MTU VMS units by a qualified marine electrician has been increased from $200 to $400 in response to these comments. Estimates of the economic impacts of compliance with the final regulations have been updated in the FRFA and final rule.

Comments were also received on the delayed implementation date discussed in the IRFA and proposed rule. The Agency is implementing a delayed implementation date to mitigate economic impacts and provide stakeholders with some additional time to get new E–MTU units installed and operating. Commenters asked for additional time, up to six months, to comply with the new requirements and for the effective date to coincide with a period of low fishing activity. NMFS is implementing this final rule with two effective dates. As of January 1, 2012, all E–MTU VMS units must be installed by a qualified marine electrician. As of March 1, 2012, vessel owners and/or operators must have an E–MTU VMS unit installed on their vessel and must use the unit to provide position reports, declare target species and fishing gear possessed onboard two hours prior to departing on a fishing trip, and provide notification of landing three hours in advance of returning to port. The selected delayed effective dates coincide with a period of reduced fishing activity for many HMS participants affected by the new requirement. This date also balances the need for fishermen to save money for the initial costs of buying the unit with the need to expedite the requirement so fishermen are ensured access to the reimbursement. A 6-month phase in period, as suggested by the public comment, would increase the likelihood that reimbursement funds are not available to fishermen, thus was not chosen. The delayed implementation date would also allow vendors of type approved E–MTUs to ensure they have an adequate supply of units in stock.

Under section 604(a)(3), Federal agencies must provide an estimate of the number of small entities to which the rule would apply. The Small Business Administration (SBA) standards for a ''small'' versus ''large'' business entity are entities that have average annual receipts less than $4.0 million for fish-harvesting; average annual receipts less than $6.5 million for charter/party boats; 100 or fewer employees for wholesale dealers; or 500 or fewer employees for seafood processors. Under these standards, NMFS considers all HMS permit holders subject to this rulemaking to be small entities. This action would apply to all 249 participants in the Atlantic HMS pelagic PLL fishery, 50 participants in the shark bottom longline (BLL) fishery, and 30 participants in the shark gillnet fishery. These permit estimates are based on October 2010 permit data and fishery-specific assumptions to determine the potential affected universe of participants. Atlantic HMS PLL vessels are required to use VMS year-round whenever they are away from port. The number of vessels was determined by adding the number of swordfish directed (177) and incidental (72) permit holders. One of these permits is required to retain swordfish with PLL gear and the majority of swordfish fishermen with those permits use PLL gear. The estimate for BLL participants was derived by adding the number of shark incidental and directed permit holders residing in states adjacent to the Mid-Atlantic closed areas, including: Virginia (3), North Carolina (28), and South Carolina (19). The estimate for shark gillnet vessels was based on recent analysis conducted in Amendment 3 to the Consolidated Atlantic HMS FMP, which determined that there were 30 directed permit holders fishing with shark gillnet gear. All of these vessel owners are commercial fishermen and considered small entities. Depending on the fishing gear possessed on board, vessels will continue to use VMS units when away from port to provide location reports consistent with existing regulations. These vessels will also be required to declare target species and gear types possessed on board to NMFS enforcement prior to leaving port and then provide NMFS enforcement advanced notice of landing. The position reports, fishery declaration, and return reports must be sent via an E–MTU VMS unit.

Under section 604(a)(4), Federal agencies must provide a description of the projected reporting, recordkeeping, and other compliance requirements of the rule. The final action will require that the small entities (commercial fishermen) procure an approved E–MTU VMS unit and have the new units installed by a qualified marine electrician. A form describing the technical specifications of the unit will be filled out by the qualified marine electrician and then submitted to NMFS enforcement by the vessel owner. This represents a slight deviation from existing protocols for installation of VMS units. Currently, vessel owners themselves are able to complete the installation and then submit the checklist.

The E–MTU VMS units allow for two-way communication, including the ability to send and receive electronic messages. Consistent with existing regulations, fishermen would be required to send hourly location reports while they are away from port using the VMS units. Additionally, the final rule contains some new reporting and compliance requirements using the E–MTU VMS units in addition to providing location reports. Vessels will be required to send an electronic message to NMFS enforcement two hours prior to departing the dock and describe target species and what fishing gear(s) will be possessed on board the vessel. Creating a fishery declaration system will allow NMFS enforcement officials to more accurately track and monitor vessels for compliance in specific fisheries. The new declaration system will be compatible with the

capabilities of newly required E–MTU VMS units. Additionally, the requirement to notify NMFS enforcement at least three hours prior to returning to port provides notification that fishing activities are being completed, and the vessel is transiting back to port.

Under section 604(a)(5), agencies are required to describe any alternatives to the rule which accomplish the stated objectives and which minimize any significant economic impacts. Economic impacts are discussed below and in the Environmental Assessment for the actions that initially established VMS requirements. Additionally, the Regulatory Flexibility Act (5 U.S.C. 603 (c)(1)–(4)) lists four general categories of significant alternatives that would assist an agency in the development of significant alternatives. These categories of alternatives are: (1) Establishment of differing compliance or reporting requirements or timetables that take into account the resources available to small entities; (2) clarification, consolidation, or simplification of compliance and reporting requirements under the rule for such small entities; (3) use of performance rather than design standards; and, (4) exemptions from coverage of the rule for small entities.

In order to meet the objectives of this final rule, consistent with the Magnuson-Stevens Act, NMFS cannot exempt small entities or change the reporting requirements only for small entities because all of the participants in Atlantic HMS fisheries are considered small entities. The requirements to have an updated E–MTU VMS unit installed by a qualified marine technician and expand reporting requirements to include a declaration system is expected to improve the reliability of VMS transmissions and provide NMFS enforcement with additional information to accurately monitor fishing activities. NMFS does not specify a particular manufacturer or model of VMS unit that vessel owners would need to procure to comply with the final action. As noted above, there are several models available that meet the specifications described in the latest type approval notice (73 FR 5813; January 31, 2008). A list of E–MTU VMS units that are currently type approved for use in Atlantic HMS fisheries is available on the NMFS Office of Law Enforcement Web site at *http://www.nmfs.noaa.gov/ole/docs/2011/07/noaa_fisheries_service_type_approved_vms_units.pdf.* Copies of this list and other information may be obtained by contacting the VMS Support Center at (phone) (888) 219–9228, (fax) (301) 427–0049, *ole.helpdesk@noaa.gov,* or write to NMFS Office for Law Enforcement, VMS Support Center, 8484 Georgia Avenue, Suite 415, Silver Spring, MD 20910.

NMFS considered two alternatives in compliance with the Regulatory Flexibility Act. Alternative one, the no action alternative, would maintain the existing VMS requirements in Atlantic HMS fisheries. Alternative two, the preferred alternative, would mandate that Atlantic HMS vessels that are required to use VMS replace their MTU VMS unit with an E–MTU VMS by March 1, 2012, and have the new unit installed by a qualified marine electrician. This alternative would also implement a fishery declaration system where vessels would declare their target species and gear type(s) possessed onboard, as well as require vessels to provide advanced notice of departure and landing. Alternative two is the preferred alternative.

Under the no action alternative, vessels that are required to use VMS would be able to continue to use the MTU VMS units currently being employed in the PLL, BLL, and gillnet fisheries or access reimbursement funds ($3,100 per VMS unit) to voluntarily replace these units with E–MTU VMS units. The decision to replace existing units with E–MTU VMS units would be at the discretion of individual vessel owners. In the event that existing units failed beyond repair, E–MTU VMS units would need to be installed, and owners would be eligible for reimbursement funds ($3,100 per VMS unit) to offset the initial costs of the unit. Costs for individual E–MTU VMS units that meet the type approval specifications start at approximately $3,100 per unit depending on the manufacturer, model, and additional features of the unit. NMFS expects that any vessel owner who applies for reimbursement funds will receive those funds; however, reimbursement funds are not guaranteed and are subject to limitations and distributed on a first-come, first-serve basis. In the event of necessary replacement, the E–MTU VMS units would need to be procured by vessel owners before returning to fishing activities, consistent with existing regulations, depending on the gear possessed onboard the vessel, timing, and location of the fishing activity. This alternative would not require that the new units be installed by a qualified marine electrician. Rather, the new units could be installed by vessel owners/operators and an installation checklist would need to be completed and sent to NMFS enforcement per existing requirements.

Under the no action alternative, vessel owners or operators would not be required to provide NMFS enforcement with information concerning target species and gear possessed on board prior to leaving port to engage in fishing activities. Furthermore, vessel owners or operators would not be required to provide NMFS enforcement with advanced notice of departure and landing. Vessels would still be required to provide hourly position reports, starting two hours before leaving port, when away from port. It is estimated that these reports would continue to cost $1.00 per day assuming 24 reports are sent. Maintenance costs for these units are estimated at $500 per vessel per year. Some vessels may be committed to long-term service contracts with communication service providers and maintaining the status quo would not require vessels to break these contracts, avoiding any early termination fees. Unlike the MTU VMS units, which could have maintenance costs of approximately $500 per year, E–MTU VMS units have very low to no maintenance costs.

Under the preferred alternative, fishery participants would be required to replace by March 1, 2012, MTU VMS units with E–MTU VMS units (including approximately 80 to 100 fishery participants that would replace MTUs with E–MTUs), however they would be able to access reimbursement funds ($3,100 per VMS unit) to offset the initial costs of the units. Reimbursement funds would be subject to limitations and distributed on a first-come, first-serve basis. Furthermore, individuals that have previously received reimbursement funds for an E–MTU VMS unit required in another fishery would not be eligible for additional funds. In the IRFA, the Agency estimated that the proposed action require that the units be installed by a qualified marine electrician ($200 per installation) to ensure that units are installed and operating properly to avoid transmission failures that may occur when vessels are away from port and subject to VMS requirements. The Agency received several public comments indicating that an estimate of $200 for installation may not be appropriate for vessels that are docked in remote ports that are far from large population centers. Therefore, the Agency has revised its estimate for installation by a qualified marine electrician from $200 to $400 consistent with public comments received. Marine electricians are also capable of providing information on E–MTU VMS

use and troubleshooting during the installation process.

NMFS is also planning on delaying the implementation date in order to allow vessel owners time to procure and have an E–MTU. The Agency received comments requesting that the effective date be delayed even further, to six months after publication of the final rule. The effective date also coincides with a period of reduced fishing activity for many HMS participants affected by the new requirement. A delayed effective date balances the need for fishermen to save money for the initial outlay to procure the unit with the need to expedite the requirement so fishermen may access the reimbursement funds. The extended implementation period would also allow vendors of type approved E–MTUs to ensure they have an adequate supply of units in stock.

Costs of compliance with the preferred alternative for vessel owners are estimated to be $3,971; $3,830; $3,737 per vessel for PLL, BLL, and shark gillnet vessels, respectively, in the first year (Table 1). These are the costs of compliance, pre-reimbursement. Reimbursement funds of $3,100 per VMS unit would reduce the costs to $745 per vessel, on average, across all fisheries. Costs in year two (and beyond) would be limited to the costs of sending/receiving declaration reports ($0.06 per report) and providing vessel location information on an hourly basis ($1.56 per vessel per day) and is estimated to be $471; $331; and $237 per vessel for PLL, BLL, and shark gillnet vessels, respectively.

Table 1 summarizes some of the costs associated with the final rule. A description of the figures and calculations used in Table 1 is provided below the table.

TABLE 1—COSTS OF COMPLIANCE EXPECTED AS A RESULT OF REQUIRING E–MTU VMS UNITS IN AFFECTED HMS FISHERIES

	Pelagic longline vessels	Shark bottom longline vessels	Shark gillnet vessels
E–MTU VMS Unit	$3,100	$3,100	$3,100.
Estimated Installation Costs (one-time)	$50–400 ($400 used for estimation purposes.	$50–400 ($400 used for estimation purposes).	$50–400 ($400 used for estimation purposes).
Daily Position Report Costs (Hourly, 24/day) ($0.06/report * 24 reports/day).	$1.44	$1.44	$1.44.
Estimated Days Fishing/Year	324	212	152.
Annual Position Report Costs/Vessel ($1.44/day * days fishing/year).	$466.56/vessel	$305.28/vessel	$218.88/vessel.
Annual Number of Fishing Trips	36	212	152.
Annual Gear/Spp. Declaration Costs ($0.12/trip)/Vessel ($0.12/trip * trips/year) **.	$4.32	$25.44	$18.24.
Total Estimated Costs/Vessel (Year 1) (VMS unit + installation + position reports + declaration reports).	$3,971	$3,830	$3,737.
Number of Affected Vessels	249	50	30.
Total Costs by Fishery (Year 1) (Total Estimated Costs/Vessel * Number of Affected Vessels).	$988,749	$191,536	$112,113.
Gross Cost of Compliance, Year One (all HMS vessels combined).	$1,292,398.		
Potential Reimbursement Funds ($3,100/vessel * Number of Affected Vessels).	$1,019,900.		
Compliance Costs (Year 1) (avg. cost/vessel) (installation + position reports + declaration reports).	$870/vessel	$730/vessel	$637/vessel.
Compliance Costs/Vessel (Year 2 and Beyond) (position reports + declaration reports).	$471/vessel	$331/vessel	$237/vessel.

** The declaration costs per trip will vary based upon the number of gear types possessed onboard as operators would be required to submit one declaration for each fishing gear possessed.

There are benefits associated with the final action relative to the no-action alternative. Requiring that an E–MTU VMS unit be installed by a qualified marine electrician would improve the reliability of VMS data transmitted from HMS vessels. Implementing a declaration system would enhance NMFS communication with HMS vessels at sea and provide valuable information concerning target species and gear type(s) possessed onboard vessels to ensure enforcement of closed areas and other regulations. Furthermore, the delayed implementation date associated with the preferred alternative would allow more time for fishermen to make the transition to the new VMS units and a declaration system coincides with a period of low fishing activity for many HMS permit holders. NMFS solicited comment from the public regarding the implementation date and costs for installation to ensure that economic impacts are accurate. Based on public comment, the estimate for installation by a qualified marine electrician was revised to $400 to reflect costs of installation at remote ports. Vessels at these ports would expect to pay more to cover costs of having a marine electrician travel to and from these areas. One of the objectives of this final action is to modify the requirements in order to ensure that small entities affected can access the reimbursement funds and make the transition to E–MTU VMS.

The preferred alternative was selected over the no action alternative even though it was not the lowest cost alternative because it will ensure that all Atlantic HMS vessels that are required to use VMS are using a more reliable type of unit that is also capable of two-way communication (E–MTU VMS). Under the no action alternative, the regulations require that these updated units are installed only in the event of the MTU VMS units failing. Once the MTU units fail, then individual vessels

would be required to install E–MTU VMS units. The preferred alternative would require that all vessels make the transition to E–MTU VMS at the same time to ensure that all vessels have the same capabilities.

The preferred alternative would also require that E–MTU VMS units are installed by a qualified marine electrician. Installation of these units can be complicated and improper installation has been responsible for VMS units failing at sea during fishing activities. Ensuring that the units are properly installed and that a qualified marine electrician provides valuable information about the unit and installation to NMFS enforcement will increase the reliability and functionality of the updated units.

One of the primary objectives of the rulemaking is to improve NMFS enforcement's ability to monitor fishing vessels and ensure compliance with fishery management measures. The preferred alternative implements a fishery declaration requirement where vessels would provide valuable information concerning fishing gear onboard and target species prior to leaving port. With this information, NMFS enforcement will know which regulations should apply to an individual vessel without having to dispatch an aircraft or enforcement vessel to board a fishing vessel to discern its activities.

This final action does not contain regulatory provisions with federalism implications sufficient to warrant preparation of a Federalism Assessment under E.O. 13132.

Small Entity Compliance Guide

Section 212 of the Small Business Regulatory Enforcement Fairness Act of 1996 states that, for each rule or group of related rules for which an agency is required to prepare a FRFA, the agency shall publish one or more guides to assist small entities in complying with the rule, and shall designate such publications as ''small entity compliance guides.'' The agency shall explain the actions a small entity is required to take to comply with a rule or group of rules. Copies of the compliance guide for this final rule are available (see **ADDRESSES**).

List of Subjects in 50 CFR Part 635

Fisheries, Fishing, Fishing vessels, Foreign relations, Imports, Penalties, Reporting and recordkeeping requirements, Treaties.

Dated: November 25, 2011.

Patricia A. Montanio,

Acting Deputy Assistant Administrator for Operations, National Marine Fisheries Service.

For the reasons set out in the preamble, 50 CFR part 635 is amended as follows:

PART 635—ATLANTIC HIGHLY MIGRATORY SPECIES

■ 1. The authority citation for part 635 continues to read as follows:

Authority: 16 U.S.C. 971 *et seq.;* 16 U.S.C. 1801 *et seq.*

■ 2. In § 635.69, paragraph (a) introductory text, and paragraphs (d), (e), and (g) are revised to read as follows:

§ 635.69 Vessel monitoring systems.

* * * * *

(a) *Applicability.* To facilitate enforcement of time/area and fishery closures, an owner or operator of a commercial vessel permitted, or required to be permitted, to fish for Atlantic HMS under § 635.4 and that fishes with pelagic or bottom longline or gillnet gear, is required to install a NMFS-approved enhanced mobile transmitting unit (E–MTU) vessel monitoring system (VMS) on board the vessel and operate the VMS unit under the circumstances listed in paragraphs (a)(1) thorugh (a)(4) of this section. For purposes of this section, a NMFS-approved E–MTU VMS is one that has been approved by NMFS as satisfying its type approval listing for E–MTU VMS units. Those requirements are published in the **Federal Register** and may be updated periodically.

* * * * *

(d) *Installation and activation.* As of March 1, 2012, only an E–MTU VMS that has been approved by NMFS for Atlantic HMS Fisheries may be used. As of January 1, 2012, any VMS unit must be installed by a qualified marine electrician. When any NMFS-approved E–MTU VMS is installed and activated or reinstalled and reactivated, the vessel owner or operator must—

(1) Follow procedures indicated on a NMFS-approved installation and activation checklist for the applicable fishery, which is available from NMFS;

(2) Submit to NMFS a statement certifying compliance with the checklist, as prescribed on the checklist; and,

(3) Submit to NMFS the checklist, completed by a qualified marine electrician. Vessels fishing prior to NMFS' receipt of the completed checklist and compliance certification statement will be in violation of the VMS requirement.

(e) *Operation.*—(1) Owners or operators of vessels subject to requirements specified in paragraph (a) of this section, must activate the VMS unit to submit automatic position reports at least 2 hours prior to leaving port and continuing until the vessel returns to port. While at sea, the unit must always be on, operating and reporting without interruption, and NMFS enforcement must receive position reports without interruption. No person may interfere with, tamper with, alter, damage, disable, or impede the operation of a VMS, or attempt any of the same. Vessels fishing outside the geographic area of operation of the installed VMS will be in violation of the VMS requirement.

(2) At least 2 hours prior to departure for each trip, a vessel owner or operator must initially report to NMFS any HMS the vessel will target on that trip and the specific type(s) of fishing gear, using NMFS-defined gear codes, that will be on board the vessel. If the vessel owner or operator participates in multiple HMS fisheries, or possesses multiple fishing gears on board the vessel, the vessel owner or operator must submit multiple electronic reports to NMFS. If, during the trip, the vessel switches to a gear type or species group not reported on the initial declaration, another declaration must be submitted before this fishing begins. This information must be reported to NMFS using an attached VMS terminal.

(3) A vessel owner or operator must report advance notice of landing to NMFS. For the purposes of this paragraph, landing means to arrive at a dock, berth, beach, seawall, or ramp. The vessel owner or operator is responsible for ensuring that NMFS is contacted at least 3 hours in advance of landing regardless of trip duration. This information must be reported to NMFS using an attached VMS terminal.

* * * * *

(g) *Repair and replacement.* After a fishing trip during which interruption of automatic position reports has occurred, the vessel's owner or operator must have a qualified marine electrician replace or repair the VMS unit prior to the vessel's next trip. Repair or reinstallation of a VMS unit or installation of a replacement, including change of communications service provider, shall be in accordance with the installation and activation

requirements specified at § 635.69(d) of this part.

* * * * *

[FR Doc. 2011–30956 Filed 12–1–11; 8:45 am]

BILLING CODE 3510–22–P

Proposed Rules

Federal Register
Vol. 76, No. 232
Friday, December 2, 2011

This section of the FEDERAL REGISTER contains notices to the public of the proposed issuance of rules and regulations. The purpose of these notices is to give interested persons an opportunity to participate in the rule making prior to the adoption of the final rules.

CONSUMER PRODUCT SAFETY COMMISSION

16 CFR Chapter II

[Docket No. CPSC–2011–0074]

Table Saw Blade Contact Injuries; Notice of Extension of Time for Comments

AGENCY: U.S. Consumer Product Safety Commission.

ACTION: Comment request.

SUMMARY: The Consumer Product Safety Commission (''CPSC'' or ''Commission'' or ''we'') is considering whether a new performance safety standard is needed to address an unreasonable risk of injury associated with table saws. We are conducting this proceeding under the authority of the Consumer Product Safety Act (''CPSA''), 15 U.S.C. 2051–2084. In the **Federal Register** of October 11, 2011 (76 FR 62678), we published an advance notice of proposed rulemaking (''ANPR''), inviting written comments concerning the risk of injury associated with table saw blade contact, regulatory alternatives, other possible means to address this risk, and other topics or issues. In response to a request from the Power Tool Institute, Inc., we are announcing an extension of the comment period for 60 days.

DATES: Submit comments by February 10, 2012.

ADDRESSES: You may submit comments, identified by Docket No. CPSC–2011–0074, by any of the following methods:

Electronic Submissions

Submit electronic comments in the following way: *Federal eRulemaking Portal: http://www.regulations.gov.* Follow the instructions for submitting comments.

To ensure timely processing of comments, the Commission is no longer accepting comments submitted by electronic mail (email), except through: *http://www.regulations.gov.*

Written Submissions

Submit written submissions in the following way:

Mail/Hand delivery/Courier (for paper, disk, or CD–ROM submissions), preferably in five copies, to: Office of the Secretary, U.S. Consumer Product Safety Commission, Room 502, 4330 East West Highway, Bethesda, MD 20814; telephone (301) 504–7923.

Instructions: All submissions received must include the agency name and petition number for this rulemaking. All comments received may be posted without change, including any personal identifiers, contact information, or other personal information provided, to: *http://www.regulations.gov.* Do not submit confidential business information, trade secret information, or other sensitive or protected information electronically. Such information should be submitted in writing.

Docket: For access to the docket to read background documents or comments received, go to: *http://www.regulations.gov.*

FOR FURTHER INFORMATION CONTACT: Caroleene Paul, Directorate for Engineering Sciences, U.S. Consumer Product Safety Commission, 5 Research Place, Rockville, Maryland 20850; telephone (301) 987–2225; fax (301) 869–0294; email *cpaul@cpsc.gov.*

SUPPLEMENTARY INFORMATION: On April 15, 2003, Stephen Gass, David Fanning, and James Fulmer, *et al.* (''petitioners'') requested that we require performance standards for a system to reduce or prevent injuries from contact with the blade of a table saw. The petitioners cited estimates of 30,000 annual injuries involving table saws, with approximately 90 percent of the injuries occurring to the fingers and hands, and 10 percent of the injuries resulting in amputation. The petitioners alleged that current table saws pose an unacceptable risk of severe injury because they are inherently dangerous and lack an adequate safety system to protect the user from accidental contact with the blade.

In the **Federal Register** of July 9, 2003 (68 FR 40912) and September 5, 2003 (68 FR 52753), we invited comments on the issues raised by the petition (Petition No. CP03–2). We received 69 comments. CPSC staff's initial briefing package regarding the petition is available on the CPSC Web site at: *http://www.cpsc.gov/library/foia/foia06/brief/tablesaw.pdf.* On July 11, 2006, the Commission voted (2–1) to grant the petition and directed CPSC staff to draft an ANPR. On July 15, 2006, the Commission lost its quorum and was unable to move forward with publication of an ANPR at that time. However, CPSC staff continued to evaluate table saws and initiated a special study from January 2007 to December 2008, to gather more accurate estimates on table saw injuries and hazard patterns related to table saw injuries. Based on CPSC staff's updated information on blade contact injuries associated with table saw use and CPSC staff's evaluation of current technologies on table saws, we issued an ANPR on table saw blade contact injuries in the **Federal Register** of October 11, 2011 (76 FR 62678). CPSC staff also updated its briefing package, which supplements the initial briefing package, and the updated briefing package is available on the CPSC Web site at: *http://www.cpsc.gov/library/foia/foia11/brief/tablesaw.pdf.*

The ANPR contained information describing the product, the market for table saws, the incident data, economic considerations, existing standards, and regulatory alternatives (76 FR at 62679 through 62683). The ANPR identified three regulatory alternatives: (1) A voluntary standard addressing risks associated with table saw blade contact injuries; (2) a mandatory rule establishing performance requirements that would address table saw blade contact injuries, or (3) a labeling rule requiring specified warnings and instructions to address table saw blade contact injuries (76 FR at 62683). The ANPR also invited comment on 25 topics or issues. For the reader's convenience, we list those topics or issues here:

1. Written comments with respect to the risk of injury identified by the Commission, the regulatory alternatives being considered, and other possible alternatives for addressing the risk;
2. Any existing standard or portion of a standard that could be issued as a proposed regulation;
3. A statement of intention to modify or develop a voluntary standard to address the risk of injury discussed in this notice, along with a description of a plan (including a schedule) to do so;
4. Studies, tests, or surveys that have been performed to analyze table saw

blade contact injuries, severity of injuries, and costs associated with the injuries;

5. Studies, tests, or surveys that analyze table saw use in relation to approach/feed rates, kickback, and blade guard use and effectiveness;

6. Studies, tests, or descriptions of new technologies, or new applications of existing technologies that can address blade contact injuries, and estimates of costs associated with incorporation of new technologies or applications;

7. Estimated manufacturing cost, per table saw, of new technologies or applications that can address blade contact injuries;

8. Expected impact of technologies that can address blade contact injuries on wholesale and retail prices of table saws;

9. Expected impact of technologies that can address blade contact injuries on utility and convenience of use;

10. Information on effectiveness or user acceptance of new blade guard designs;

11. Information on manufacturing costs of new blade guard designs;

12. Information on usage rates of new blade guard designs;

13. Information on U.S shipments of table saws prior to 2002, and between 2003 and 2005;

14. Information on differences between portable bench saws, contractor saws, and cabinet saws in frequency and duration of use;

15. Information on differences between saws used by consumers, saws used by schools, and saws used commercially in frequency and duration of use;

16. Studies, research, or data on entry information of materials being cut at blade contact (I.E., approach angle, approach speed, and approach force);

17. Information that supports or disputes preliminary economic analyses on the cost of employing technologies that reduce blade contact injuries on table saws;

18. Studies, research, or data on appropriate indicators of performance for blade-to-skin requirements that mitigate injury;

19. Studies, research, or data that validates human finger proxies for skin-to-blade tests;

20. Studies, research, or data on detection/reaction systems that have been employed to mitigate blade contact injuries;

21. Studies, research, or data on the technical challenges associated with developing new systems that could be employed to mitigate blade contact injuries;

22. Studies, research, or data on guarding systems that have been employed to prevent or mitigate blade contact injuries;

23. Studies, research, or data on kickback of a work piece during table saw use;

24. The costs and benefits of mandating a labeling or instructions requirement; and

25. Other relevant information regarding the addressability of blade contact injuries.

The ANPR requested comments by December 12, 2011.

On November 3, 2011, the Power Tool Institute, Inc. (''PTI'') requested a 60-day extension of the comment period. PTI explained that in March 2011, it had submitted a Freedom of Information Act request for all documents and materials related to and underlying the ''Table Saw Study'' conducted by CPSC staff. It further explained that:

> In the ANPR, CPSC makes it clear that it was this updated injury information upon which the Commission's decision to issue the proposed rule was based. The importance of this injury data, and the associated materials describing the context of the injuries, makes it vital that stakeholders have the ability to analyze this information prior to submitting comments on the ANPR.

Letter from Susan M. Young, Power Tool Institute, Inc., to Inez M. Tenenbaum, Chairman, Consumer Product Safety Commission, dated November 3, 2011, at 1. PTI further indicated that it had not received all materials relating to its FOIA request and, between September 29, 2011 and October 28, 2011, had submitted an additional three FOIA requests for other materials pertaining to the ''CPSC's development of a table saw standard.'' *Id.* at 1–2. PTI said that:

> A 60-day extension of the comment period would allow PTI the ability to adequately analyze the reports underlying the Table Saw Study, give CPSC staff time to respond to PTI's outstanding FOIA requests, and give PTI the opportunity to formulate an adequate analysis of the information received. With the additional time granted, PTI will be in a position to submit comments to CPSC in support of the Commission's goal of increasing public protection from unnecessary injuries.

Id. at 2.

The Commission has produced all underlying reports regarding the Table Saw Study to PTI, including more than 800 pages of information. While additional FOIA requests by PTI may be pending, the documents relevant to the Table Saw Study all have been produced, and PTI's other FOIA requests seek documents on different products or issues that are not relevant to the ANPR. Thus, the production of additional documents in response to PTI's outstanding FOIA requests does not justify a further extension of the comment date. However, to ensure that the public has an adequate opportunity to comment with regard to the underlying reports regarding the Table Saw Study that have been produced to PTI, the Commission will be posting those reports in its FOIA Reading Room on the CPSC Web site and will make them a part of the administrative record. Through this notice, we are announcing a 60-day extension of the comment period to give all interested parties additional time to prepare their responses to the ANPR. Thus, the comment period for the ANPR is extended to February 10, 2012.

Dated: November 29, 2011.

Todd A. Stevenson,

Secretary, U.S. Consumer Product Safety Commission.

[FR Doc. 2011–31008 Filed 12–1–11; 8:45 am]

BILLING CODE 6355–01–P

DEPARTMENT OF HOMELAND SECURITY

Coast Guard

33 CFR Part 117

[Docket No. USCG–2011–0959]

Drawbridge Operation Regulation; Gulf Intracoastal Waterway (Algiers Alternate Route), Belle Chasse, LA

AGENCY: Coast Guard, DHS.

ACTION: Notice of proposed rulemaking.

SUMMARY: The Coast Guard proposes to change the regulation governing the operation of the SR 23 bridge across the Gulf Intracoastal Waterway (Algiers Alternate Route), mile 3.8, at Belle Chasse, Plaquemines Parish, Louisiana. Due to increased vehicular traffic, the State of Louisiana requested a change to the operation schedule, allowing the bridge to open only on the hour during the day from Monday through Friday, while maintaining morning and afternoon maritime restrictions.

DATES: Comments and related material must reach the Coast Guard on or before January 31, 2012.

ADDRESSES: You may submit comments identified by docket number USCG–2011–0959 using any one of the following methods:

(1) *Federal eRulemaking Portal: http://www.regulations.gov.*

(2) *Fax:* (202) 493–2251.

(3) *Mail:* Docket Management Facility (M–30), U.S. Department of Transportation, West Building Ground Floor, Room W12–140, 1200 New Jersey

Avenue SE., Washington, DC 20590–0001.

(4) *Hand delivery:* Same as mail address above, between 9 a.m. and 5 p.m., Monday through Friday, except Federal holidays. The telephone number is (202) 355–9329.

To avoid duplication, please use only one of these four methods. See ''Public Participation and Request for Comments'' portion of the **SUPPLEMENTARY INFORMATION** section below for instructions on submitting comments.

FOR FURTHER INFORMATION CONTACT: If you have questions on this proposed rule, call Donna Gagliano, Bridge Administration Branch at (504) 671–2128, email *Donna.Gagliano@uscg.mil.* If you have questions on viewing or submitting material to the docket, call Renee V. Wright, Program Manager, Docket Operations, telephone (202) 366–9826.

SUPPLEMENTARY INFORMATION:

Public Participation and Request for Comments

We encourage you to participate in this rulemaking by submitting comments and related materials. All comments received will be posted, without change, to *http://www.regulations.gov* and will include any personal information you have provided.

Submitting Comments

If you submit a comment, please include the docket number for this rulemaking (USCG–2011–0959), indicate the specific section of this document to which each comment applies, and provide a reason for each suggestion or recommendation. You may submit your comments and material online (*http://www.regulations.gov*), or by fax, mail or hand delivery, but please use only one of these means. If you submit a comment online via *http://www.regulations.gov,* it will be considered received by the Coast Guard when you successfully transmit the comment. If you fax, hand delivery, or mail your comment, it will be considered as having been received by the Coast Guard when it is received at the Docket Management Facility. We recommend that you include your name and a mailing address, an email address, or a phone number in the body of your document so that we can contact you if we have questions regarding your submission.

To submit your comment online, go to *http://www.regulations.gov,* click on the ''submit a comment'' box, which will then become highlighted in blue. In the ''Document Type'' drop down menu select ''Proposed Rules'' and insert ''USCG–2011–0959'' in the ''Keyword'' box. Click ''Search'' then click on the balloon shape in the ''Actions'' column. If you submit your comments by mail or hand delivery, submit them in an unbound format, no larger than 8½ by 11 inches, suitable for copying and electronic filing. If you submit them by mail and would like to know that they reached the Facility, please enclose a stamped, self-addressed postcard or envelope. We will consider all comments and material received during the comment period and may change the rule based on your comment.

Viewing Comments and Documents

To view comments, as well as documents mentioned in this preamble as being available in the docket, go to *http://www.regulations.gov,* click on the ''read comments'' box, which will then become highlighted in blue. In the ''Keyword'' box insert ''USCG–2011–0959'' and click ''Search.'' Click the ''Open Docket Folder'' in the ''Actions'' column. You may also visit the Docket Management Facility in Room W12–140 on the ground floor of the Department of Transportation West Building, 1200 New Jersey Avenue SE., Washington, DC 20590, between 9 a.m. and 5 p.m., Monday through Friday, except Federal holidays. We have an agreement with the Department of Transportation to use the Docket Management Facility.

Privacy Act

Anyone can search the electronic form of comments received into any of our dockets by the name of the individual submitting the comment (or signing the comment, if submitted on behalf of an association, business, labor union, *etc.*). You may review a Privacy Act notice regarding our public dockets in the January 17, 2008, issue of the **Federal Register** (73 FR 3316).

Public Meeting

We do not now plan to hold a public meeting. But you may submit a request for one using one of the four methods specified under **ADDRESSES**. Please explain why a public meeting would be beneficial. If we determine that one would aid this rulemaking, we will hold one at a time and place announced by a later notice in the **Federal Register**.

Basis and Purpose

The Coast Guard, at the request of the State of Louisiana, proposes to change the existing operating schedule for the SR 23 vertical lift bridge across the Gulf Intracoastal Waterway (Algiers Alternate Route), mile 3.8, at Belle Chasse, Plaquemines Parish, Louisiana. Due to an increase in vehicle traffic, the State of Louisiana requested a change to the operation schedule. This change would allow the bridge to open only on the hour during the day from Monday through Friday, while maintaining morning and afternoon maritime restrictions. Bridge tender logs for the past 7-month period showed that approximately 560 vessels (19% of the vessels that transit under the bridge) requested an opening between the hours of 6 a.m. and 9 a.m. and between the hours of 3 p.m. and 6 p.m. Traffic counts were collected beginning September 26, 2011 for a 2-week period, during the average work week, and a 24-hour summary showed 7354 vehicles (40%) commuted across the bridge during the same times. Thus, a substantial delay can occur to vehicular traffic during the morning and afternoon heavy commute periods. The proposed change would allow for a set schedule of openings for vessels while minimally disrupting vehicular traffic during the morning and afternoon rush hours. Also, the proposed schedule would allow additional time to clear vehicular traffic from the roadways and reduce traffic backups caused by the bridge openings. It is expected that very few vessels will be impacted by this change, and reasonable alternative routes are available for vessels that must avoid delay. All vessels waiting during the closure will be allowed to pass at scheduled openings.

Presently, 33 CFR 117.451(b) states: The draw of the SR 23 Bridge, Algiers Alternate Route, mile 3.8 at Belle Chasse, shall open on signal; except that, from 6 a.m. to 8:30 a.m. and from 3:30 p.m. to 5:30 p.m. Monday through Friday, except Federal holidays, the draw need not be opened for the passage of vessels.

Discussion of Proposed Rule

The proposed change will allow the bridge to operate as follows: The bridge shall open on signal between 8 p.m. and 6:30 a.m. for the passage of vessels. From 6:30 a.m. until 8 p.m. Monday through Friday the bridge will only open on the hour for the passage of vessel traffic. However, to facilitate the movement of vehicular traffic during rush hour this change will continue to allow the bridge to remain closed to navigation from 6:30 a.m. until 9 a.m. and from 3:30 p.m. until 6 p.m. Monday through Friday, excluding Federal holidays. Specifically, the draw need not open at 7 a.m., 8 a.m., 4 p.m. and 5 p.m. weekdays, excluding Federal holidays. Hourly openings will allow the motorist to know when the bridge

may open. At all times on the weekend the bridge will open on signal.

The vertical clearance of the bridge is 40 feet above mean high water in the closed-to-navigation position, so only vessels with vertical clearance requirement of greater than 40 feet will be affected by the proposed change. An alternate route is available via Harvey Canal (GIWW), if such vessels do not wish to be delayed.

A Test Deviation, following the aforementioned operating schedule under docket number USCG–2011–0959, is being issued in conjunction with the Notice of Proposed Rulemaking to test the proposed schedules and to obtain data and public comments. The test period will be in effect from December 19, 2011 until January 17, 2012. The Coast Guard will review the logs of the drawbridge and evaluate public comments for this Notice of Proposed Rulemaking and the above referenced Temporary Deviation to determine if a permanent special drawbridge operating regulation is warranted.

Regulatory Analyses

We developed this proposed rule after considering numerous statutes and executive orders related to rulemaking. Below we summarize our analyses based on 13 of these statutes or executive orders.

Regulatory Planning and Review

This proposed rule is not a ''significant regulatory action'' under section 3(f) of Executive Order 12866, Regulatory Planning and Review, as supplemented by Executive Order 13563, Improving Regulation and Regulatory Review, and does not require an assessment of potential costs and benefits under section 6(a)(3) of that Order. The Office of Management and Budget has not reviewed it under that Order.

We expect the economic impact of this proposed rule to be so minimal that a full Regulatory Evaluation is unnecessary. Very few vessels will be impacted or backed up, and those few vessels should be able to modify their transit times and routes accordingly.

Small Entities

Under the Regulatory Flexibility Act (5 U.S.C. 601–612), we have considered whether this proposed rule would have a significant economic impact on a substantial number of small entities. The term ''small entities'' comprises small businesses, not-for-profit organizations that are independently owned and operated and are not dominant in their fields, and governmental jurisdictions with populations of less than 50,000.

The Coast Guard certifies under 5 U.S.C. 605(b) that this proposed rule would not have a significant economic impact on a substantial number of small entities. This proposed rule would affect the following entities, some of which might be small entities: the owners or operators of vessels needing to transit the bridge from 6:30 a.m. until 8 p.m. Monday through Friday. The proposed set schedule for the minimal time adjustment of each bridge closure would affect a small number of vessels impacted by the proposed rule.

This action will not have a significant economic impact on a substantial number of small entities for the following reasons. Vessels that can transit under the bridge may do so at any time. Although, the set closure of the drawbridge will effectively close that section of the waterway, an alternative route (Harvey Canal, GIWW) is available with little additional transit time. Before the effective period, we will issue maritime advisories which will be widely available to users of the waterway.

If you think that your business, organization, or governmental jurisdiction qualifies as a small entity and that this rule would have a significant economic impact on it, please submit a comment (see **ADDRESSES**) explaining why you think it qualifies and how and to what degree this rule would economically affect it.

Assistance for Small Entities

Under section 213(a) of the Small Business Regulatory Enforcement Fairness Act of 1996 (Pub. L. 104–121), we want to assist small entities in understanding this proposed rule so that they can better evaluate its effects on them and participate in the rulemaking. If the rule would affect your small business, organization, or governmental jurisdiction and you have questions concerning its provisions or options for compliance, please contact Donna Gagliano, Bridge Administration Branch, at (504) 671–2128. The Coast Guard will not retaliate against small entities that question or complain about this rule or any policy or action of the Coast Guard.

Collection of Information

This proposed rule would call for no new collection of information under the Paperwork Reduction Act of 1995 (44 U.S.C. 3501–3520.).

Federalism

A rule has implications for federalism under Executive Order 13132, Federalism, if it has a substantial direct effect on State or local governments and would either preempt State law or impose a substantial direct cost of compliance on them. We have analyzed this proposed rule under that Order and have determined that it does not have implications for federalism.

Unfunded Mandates Reform Act

The Unfunded Mandates Reform Act of 1995 (2 U.S.C. 1531–1538) requires Federal agencies to assess the effects of their discretionary regulatory actions. In particular, the Act addresses actions that may result in the expenditure by a State, local, or Tribal government, in the aggregate, or by the private sector of $100,000,000 (adjusted for inflation) or more in any one year. Though this proposed rule will not result in such an expenditure, we do discuss the effects of this rule elsewhere in this preamble.

Taking of Private Property

This proposed rule would not affect a taking of private property or otherwise have taking implications under Executive Order 12630, Governmental Actions and Interference with Constitutionally Protected Property Rights.

Civil Justice Reform

This proposed rule meets applicable standards in sections 3(a) and 3(b)(2) of Executive Order 12988, Civil Justice Reform, to minimize litigation, eliminate ambiguity, and reduce burden.

Protection of Children

We have analyzed this proposed rule under Executive Order 13045, Protection of Children from Environmental Health Risks and Safety Risks. This rule is not an economically significant rule and would not create an environmental risk to health or risk to safety that might disproportionately affect children.

Indian Tribal Governments

This proposed rule does not have Tribal implications under Executive Order 13175, Consultation and Coordination with Indian Tribal Governments, because it would not have a substantial direct effect on one or more Indian Tribes, on the relationship between the Federal Government and Indian Tribes, or on the distribution of power and responsibilities between the Federal Government and Indian Tribes.

Energy Effects

We have analyzed this proposed rule under Executive Order 13211, Actions Concerning Regulations That

Significantly Affect Energy Supply, Distribution, or Use. We have determined that it is not a ''significant energy action'' under that order because it is not a ''significant regulatory action'' under Executive Order 12866 and is not likely to have a significant adverse effect on the supply, distribution, or use of energy. The Administrator of the Office of Information and Regulatory Affairs has not designated it as a significant energy action. Therefore, it does not require a Statement of Energy Effects under Executive Order 13211.

Technical Standards

The National Technology Transfer and Advancement Act (NTTAA) (15 U.S.C. 272 note) directs agencies to use voluntary consensus standards in their regulatory activities unless the agency provides Congress, through the Office of Management and Budget, with an explanation of why using these standards would be inconsistent with applicable law or otherwise impractical. Voluntary consensus standards are technical standards (*e.g.,* specifications of materials, performance, design, or operation; test methods; sampling procedures; and related management systems practices) that are developed or adopted by voluntary consensus standards bodies.

This proposed rule does not use technical standards. Therefore, we did not consider the use of voluntary consensus standards.

Environment

We have analyzed this proposed rule under Department of Homeland Security Management Directive 023–01, and Commandant Instruction M16475.lD which guides the Coast Guard in complying with the National Environmental Policy Act of 1969 (NEPA) (42 U.S.C. 4321–4370f), and have made a preliminary determination that this action is one of a category of actions which do not individually or cumulatively have a significant effect on the human environment because it simply promulgates the operating regulations or procedures for drawbridges. We seek any comments or information that may lead to the discovery of a significant environmental impact from this proposed rule.

List of Subjects in 33 CFR Part 117

Bridges.

For the reasons discussed in the preamble, the Coast Guard proposes to amend 33 CFR part 117 as follows:

PART 117—DRAWBRIDGE OPERATION REGULATIONS

1. The authority citation for part 117 continues to read as follows:

Authority: 33 U.S.C. 499; 33 CFR 1.05–1; Department of Homeland Security Delegation No. 0170.1.

2. Section 117.451(b) is revised to read as follows:

§ 117.451 Gulf Intracoastal Waterway.

* * * * *

(b) The draw of the SR 23 Bridge, Algiers Alternate Route, mile 3.8 at Belle Chasse, shall open on signal; except that from 6:30 a.m. until 8 p.m. Monday through Friday, the draw need only open on the hour for the passage of vessels. The draw need not open at 7 a.m., 8 a.m., 4 p.m. and 5 p.m. Monday through Friday excluding Federal holidays.

* * * * *

Dated: November 3, 2011.

Roy A. Nash,

Rear Admiral, U.S. Coast Guard, Commander, Eighth Coast Guard District.

[FR Doc. 2011–30637 Filed 12–1–11; 8:45 am]

BILLING CODE 4910–15–P

DEPARTMENT OF DEFENSE

Department of the Army, Corps of Engineers

33 CFR Part 334

United States Navy Restricted Area, SUPSHIP Bath Maine Detachment Mobile at AUSTAL, USA, Mobile, AL; Restricted Area

AGENCY: U.S. Army Corps of Engineers, DoD.

ACTION: Notice of proposed rulemaking and request for comments.

SUMMARY: The U.S. Army Corps of Engineers (Corps) is proposing to amend an existing restricted area to reflect changes in responsible parties for the restricted area around the AUSTAL, USA shipbuilding facility located in Mobile, Alabama. The Supervisor of Shipbuilding, Conversion and Repair, United States Navy (USN), Gulf Coast (SUPSHIP Gulf Coast) assumed the duties of administering new construction contracts at AUSTAL USA in Mobile, Alabama, on October 9, 2011, replacing Supervisor of Shipbuilding, Conversion, and Repair, USN, Bath (SUPSHIP Bath). Therefore, the Department of the Navy has requested an amendment to the regulation to reflect the change in responsible parties. There are no other changes proposed for this restricted area.

DATES: Written comments must be submitted on or before January 3, 2012.

ADDRESSES: You may submit comments, identified by docket number COE–2011–0034, by any of the following methods:

Federal eRulemaking Portal: http://www.regulations.gov. Follow the instructions for submitting comments.

Email: david.b.olson@usace.army.mil. Include the docket number COE–2011–0034 in the subject line of the message.

Mail: U.S. Army Corps of Engineers, Attn: CECW–CO (David B. Olson), 441 G Street NW., Washington, DC 20314–1000.

Hand Delivery/Courier: Due to security requirements, we cannot receive comments by hand delivery or courier.

Instructions: Direct your comments to docket number COE–2011–0034. All comments received will be included in the public docket without change and may be made available on-line at *http://regulations.gov,* including any personal information provided, unless the commenter indicates that the comment includes information claimed to be Confidential Business Information (CBI) or other information whose disclosure is restricted by statute. Do not submit information that you consider to be CBI, or otherwise protected, through regulations.gov or email. The regulations.gov Web site is an anonymous access system, which means we will not know your identity or contact information unless you provide it in the body of your comment. If you send an email directly to the Corps without going through regulations.gov, your email address will be automatically captured and included as part of the comment that is placed in the public docket and made available on the Internet. If you submit an electronic comment, we recommend that you include your name and other contact information in the body of your comment and with any disk or CD–ROM you submit. If we cannot read your comment because of technical difficulties and cannot contact you for clarification, we may not be able to consider your comment. Electronic comments should avoid the use of any special characters, any form of encryption, and be free of any defects or viruses.

Docket: For access to the docket to read background documents or comments received, go to *http://www.regulations.gov.* All documents in the docket are listed. Although listed in the index, some information is not

publicly available, such as CBI or other information whose disclosure is restricted by statute. Certain other material, such as copyrighted material, is not placed on the Internet and will be publicly available only in hard copy form.

FOR FURTHER INFORMATION CONTACT: Mr. David Olson, Headquarters, Operations and Regulatory Community of Practice, Washington, DC at (202) 761–4922 or Mr. Donald E. Mroczko, U.S. Army Corps of Engineers, Mobile District, at (251) 690–3185.

SUPPLEMENTARY INFORMATION: The Supervisor of Shipbuilding, Conversion and Repair (SUPERVISOR), USN, Gulf Coast (SUPSHIP Gulf Coast) assumed the duties of administering new construction contracts at AUSTAL USA in Mobile, Alabama, on October 9, 2011, replacing Supervisor of Shipbuilding, Conversion, and Repair, USN, Bath (SUPSHIP Bath). The SUPERVISOR is responsible for United States Navy shipbuilding activities at AUSTAL, USA located in Mobile, Alabama. In accordance with Department of Defense and Department of the Navy guidance, the SUPERVISOR is responsible for the antiterrorism efforts and force protection of Department of the Navy assets under his or her charge. As such, the restricted area was established on September 22, 2009 (see 74 FR 48151). There are no proposed changes to the boundaries of the restricted area.

In response to a request by the United States Navy, and pursuant to its authorities in Section 7 of the Rivers and Harbors Act of 1917 (40 Stat 266; 33 U.S.C. 1) and Chapter XIX of the Army Appropriations Act of 1919 (40 Stat 892; 33 U.S.C. 3), the Corps is proposing to amend the regulation at 33 CFR 334.782 by changing the responsible party from SUPSHIP Bath to SUPSHIP Gulf Coast.

Procedural Requirements

a. *Review Under Executive Order 12866.* This proposed rule is issued with respect to a military function of the Defense Department and the provisions of Executive Order 12866 do not apply.

b. *Review Under the Regulatory Flexibility Act.* This proposed rule has been reviewed under the Regulatory Flexibility Act (Pub. L. 96–354) which requires the preparation of a regulatory flexibility analysis for any regulation that will have a significant economic impact on a substantial number of small entities (*i.e.,* small businesses and small governments). Unless information is obtained to the contrary during the public notice comment period, the Corps expects that the economic impact of the proposed rule would have practically no impact on the public or result in any anticipated navigational hazard or interference with existing waterway traffic. This proposed rule, if adopted, will not have a significant economic impact on small entities.

c. *Review Under the National Environmental Policy Act.* The Corps expects that the proposed rule will not have a significant impact to the quality of the human environment and, therefore, preparation of an environmental impact statement will not be required. An environmental assessment will be prepared after the public notice period is closed and all comments have been received and considered. After it is prepared, it may be reviewed at the District office listed at the end of the **FOR FURTHER INFORMATION CONTACT** section, above.

d. *Unfunded Mandates Act.* The proposed rule does not impose an enforceable duty among the private sector and, therefore, is not a Federal private sector mandate and is not subject to the requirements of Section 202 or 205 of the Unfunded Mandates Reform Act (Pub. L. 104–4, 109 Stat. 48, 2 U.S.C. 1501 *et seq.*). We have also found under Section 203 of the Act, that small governments will not be significantly or uniquely affected by this rulemaking.

List of Subjects in 33 CFR Part 334

Danger zones, Navigation (water), Restricted areas, Waterways.

For the reasons set out in the preamble, the Corps proposes to amend 33 CFR part 334 as follows:

PART 334—DANGER ZONE AND RESTRICTED AREA REGULATIONS

1. The authority citation for 33 CFR part 334 continues to read as follows:

Authority: 40 Stat. 266 (33 U.S.C. 1) and 40 Stat. 892 (33 U.S.C. 3).

2. Revise paragraphs (b) and (c) of § 334.782 to read as follows:

§ 334.782 SUPSHIP Gulf Coast, Pascagoula, MS Detachment Mobile, AL at AUSTAL, USA, Mobile, AL; restricted area.

* * * * *

(b) *The regulations:* (1) All persons, swimmers, vessels and other craft, except those vessels under the supervision or contract to local military or Naval authority, vessels of the United States Coast Guard, and local or state law enforcement vessels, are prohibited from entering the restricted area without permission from the Supervisor of Shipbuilding, Conversion and Repair, USN, Gulf Coast, Pascagoula, MS or his/her authorized representative.

(2) The restricted area is in effect twenty four hours per day and seven days a week (24/7).

(3) Should warranted access into the restricted navigation area be needed, all entities are to contact the Supervisor of Shipbuilding, Conversion and Repair, USN, Gulf Coast, Pascagoula, MS, or his/her authorized representative on Marine Communication Channel 16.

(c) *Enforcement:* The regulation in this section shall be enforced by the Supervisor of Shipbuilding, Conversion and Repair, USN, Gulf Coast, Pascagoula, MS and/or such agencies or persons as he/she may designate.

Dated: November 29, 2011.

Michael G. Ensch,

Chief, Operations and Regulatory Directorate of Civil Works.

[FR Doc. 2011–31018 Filed 12–1–11; 8:45 am]

BILLING CODE 3720–58–P

DEPARTMENT OF VETERANS AFFAIRS

38 CFR Part 17

RIN 2900–AO03

Autopsies at VA Expense

AGENCY: Department of Veterans Affairs.

ACTION: Proposed rule.

SUMMARY: The Department of Veterans Affairs (VA) proposes to amend its regulation that governs the performance of autopsies on veterans. The proposed rule would correct a cross-reference to VA regulations that authorize certain outpatient and ambulatory care. The proposed rule would also clarify that consent for an autopsy will be implied if 6 months has passed since the decedent's death and there are no objections from the decedent's surviving spouse or next of kin. The proposed rule would also modify current regulations to make the laws of the jurisdiction in which the autopsy will be performed the controlling laws for purposes of determining who has authority to grant permission for the autopsy. The proposed rule would also clarify the authorized purposes of a VA autopsy. Lastly, the proposed rule would clarify that the authority to order an autopsy includes transporting the body at VA's expense to the autopsy facility.

DATES: Comments must be received by VA on or before January 31, 2012.

ADDRESSES: Written comments may be submitted through *www.regulations.gov*; by mail or hand-delivery to the Director, Regulations Management (02REG), Department of Veterans Affairs, 810 Vermont Avenue NW., Room 1068,

Washington, DC 20420; or by fax to (202) 273–9026. Comments should indicate that they are submitted in response to ''RIN 2900–AO03, Autopsies at VA Expense.'' Copies of comments received will be available for public inspection in the Office of Regulation Policy and Management, Room 1063B, between the hours of 8 a.m. and 4:30 p.m., Monday through Friday (except holidays). Call (202) 461–4902 for an appointment. (This is not a toll-free number.) In addition, during the comment period, comments may be viewed online through the Federal Docket Management System (FDMS) at *http://www.regulations.gov*.

FOR FURTHER INFORMATION CONTACT: Kristin J. Cunningham, Director, Business Policy, Chief Business Office, Department of Veterans Affairs, 810 Vermont Ave. NW., Washington, DC 20420; (202) 461–1599. (This is not a toll-free number).

SUPPLEMENTARY INFORMATION: Pursuant to 38 CFR 17.170, under certain specified circumstances, ''[t]he Director of a [VA] facility is authorized to cause an autopsy to be performed on a veteran who dies outside of a [VA] facility while undergoing post-hospital care under the provisions of 38 U.S.C. 1712 and 38 CFR 17.93.'' When this regulatory provision was originally promulgated, 38 U.S.C. 1712 served as the authority for certain outpatient and ambulatory care and, therefore, it also served as the authority for our post-hospitalization autopsy regulation. However, in 1996, section 1712 was amended by the Veterans' Health Care Eligibility Reform Act of 1996, Public Law 104–262, sec. 101. The amendment moved from section 1712 to 38 U.S.C. 1710 the authority to provide outpatient and ambulatory care. In accordance with that amendment, VA promulgated 38 CFR 17.38, on October 6, 1999, 64 FR 54212. Section 17.38, inter alia, implemented the revised statutory authority, in 38 U.S.C. 1710, that authorizes VA to provide hospital and outpatient care to veterans.

We also note that 38 U.S.C. 1703 authorizes VA under specified circumstances to contract with non-VA facilities to furnish hospital care and medical services to certain veterans in non-VA facilities. VA implemented this authority with respect to individuals who died while receiving hospital and medical care in non-VA facilities in 38 CFR 17.52. Limiting autopsies to individuals who are only receiving VA medical care under § 17.38 would exclude the individuals who are receiving fee-basis care under § 17.52, and would, therefore, be inconsistent with current § 17.170. This proposed rule would update the statutory and regulatory cross-references in § 17.170 accordingly. These are overdue technical revisions that would not affect VA's authority to authorize autopsies.

38 CFR 17.170(a), (b)

This rulemaking would also amend current paragraphs (a) and (b) of § 17.170 by reorganizing and clarifying the provisions governing whether an autopsy should be performed. Current paragraphs (a) and (b) state:

(a) Except as provided in this section, no autopsy will be performed by the Department of Veterans Affairs unless there is no known surviving spouse or known next of kin; or without the consent of the surviving spouse or, in a proper case, the next of kin, unless the patient or domiciled person was abandoned by the spouse, if any, or, if no spouse, by the next of kin for a period of not less than 6 months next preceding death. Where no inquiry has been made for or in regard to the decedent for a period of 6 months next preceding his death, he or she shall be deemed to have been abandoned.

(b) If there is no known surviving spouse or known next of kin, or if the decedent shall have been abandoned or if the request is sent and the spouse or, in proper cases, the next of kin fails to reply within the reasonable time stated in such request of the Department of Veterans Affairs for permission to perform the autopsy, the Director is hereby authorized to cause an autopsy to be performed if in the Director's discretion he or she concludes that such autopsy is reasonably required for any necessary purpose of the Department of Veterans Affairs, including the completion of official records and advancement of medical knowledge.

Current paragraphs (a) and (b) use the term ''abandoned'' to effectively establish implied consent for an autopsy on the part of a known surviving spouse or next of kin and to effectively establish that there is no surviving spouse or next of kin to provide consent in cases where VA is unaware that such a person exists. This proposed rule would be clearer, and would retain the same substantive meaning, if it was revised to avoid using the term ''abandoned.'' We would state in new paragraphs (a)(2)(ii) and (iii), respectively, that VA is authorized to perform an autopsy if a known surviving spouse or next of kin has either not responded to a VA request for permission or has not inquired as to the decedent for a period of 6 months prior to death. This would accomplish the same effect as the current language, but would do so in plainer, more direct language. We would also clarify that the consent to grant an autopsy is either directly granted by the surviving spouse or next of kin, or the consent is implied. The implied consent gives VA the authority to perform an autopsy in situations where there is no known surviving spouse or next of kin, where the known surviving spouse or next of kin has not inquired as to the decedent for a period of 6 months prior to death, or where such persons have not responded to VA's request for permission to perform an autopsy. This clarifying language allows for ease of interpretation of the methods used to obtain consent for autopsy.

We also propose to state that the surviving spouse/next of kin must respond to VA's request for authorization to perform an autopsy ''within a specified period of time'' rather than within a ''reasonable time stated in such request.'' Such requests clearly specify the applicable time period, which is typically short and based on the specific facts concerning the decedent's body and/or cause of death. There is no reason to include a ''reasonable'' modifier in these situations; it is more direct to simply require a response within the time period specified in the request.

Finally, we would reorganize the provisions of current paragraphs (a) and (b) to improve readability. In so doing, we would, in proposed paragraph (a)(1), authorize the Director of the VA facility to order an autopsy if ''required for VA purposes for the following reasons: (i) Completion of official records; or (ii) Advancement of medical knowledge.'' The current rule is overly broad as it implies that there may be more than two circumstances in which VA may order an autopsy. All autopsy requests fall under the advancement of medical knowledge or the completion of medical records. This proposed rule would clarify this point. Proposed paragraph (a)(1) would restate the current rule, with the changes noted above.

38 CFR 17.170(d)

Current paragraph (e) states that ''[t]he laws of the decedent's domicile are determinative as to whether the spouse or the next of kin is the proper person to grant permission to perform an autopsy and of the question as to the order of preference among such persons.'' We note that readers may have interpreted this sentence to mean that if the decedent dies in a State where the decedent did not reside, we would apply the law of the State where the decedent resided in order to establish the proper person to grant permission for an autopsy. Laws on this issue may vary between States, and it is administratively burdensome—and unnecessary—to require VA medical center directors to determine the decedent's domicile and then to compare and contrast the laws of the

various States that may be involved. In order to avoid potential confusion and administrative difficulties, particularly in autopsy situations where time is usually of the essence, we have determined that the laws of the jurisdiction in which the autopsy would be performed should be used to determine the proper person to grant permission for the autopsy. We propose such a rule in paragraph (d)(1).

The current regulation also describes the typical hierarchy for those who may grant permission for an autopsy, but the language is hortatory and nonbinding (''[u]sually the spouse is first entitled,'' etc.). We believe that this is not only unhelpful but is also potentially misleading if it is relied upon by a VA facility director in a State in which this typical hierarchy is not in fact law. Thus, we would remove this list. This change will emphasize the need for each local VA facility to establish its own local guidance based on the applicable law of the State in which the autopsy will be performed. We also propose to reorganize and clarify the provisions of current paragraph (e) in proposed paragraph (d).

38 CFR 17.170(e)

Under current paragraph (f) the Director of a VA facility ''is authorized to cause an autopsy to be performed on a veteran who dies outside of a Department of Veterans Affairs facility while undergoing post-hospital care under the provisions of 38 U.S.C. 1712 and 38 CFR 17.93.'' As noted previously, these authorities have been revised. We would amend the regulation accordingly. In addition, current paragraph (f) states that the Director of the VA facility's authority to order an autopsy also includes authority to furnish transportation of the body at VA expense to the VA facility where the autopsy would be performed. However, an autopsy would not necessarily be performed in a VA facility. VA may use a contract provider to perform the autopsy outside of a VA facility, or utilize a regional autopsy center. We, therefore, propose to state in paragraph (e) that the authority to order an autopsy ''also includes transporting the body at VA's expense to the facility where the autopsy will be performed.''

We also propose to add an authority citation, 38 U.S.C. 501, 1703, and 1710, after § 17.170.

Paperwork Reduction Act

This document contains no provisions constituting a collection of information under the Paperwork Reduction Act of 1995 (44 U.S.C. 3501–3521).

Regulatory Flexibility Act

The Secretary hereby certifies that this proposed rule would not have a significant economic impact on a substantial number of small entities as they are defined in the Regulatory Flexibility Act, 5 U.S.C. 601–612. This proposed rule would not cause a significant economic impact on health care providers, suppliers, or entities since only a small portion of the business of such entities concerns VA beneficiaries. Therefore, pursuant to 5 U.S.C. 605(b), this proposed rule is exempt from the initial and final regulatory flexibility analysis requirements of §§ 603 and 604.

Executive Orders 12866 and 13563

Executive Orders 12866 and 13563 direct agencies to assess the costs and benefits of available regulatory alternatives and, when regulation is necessary, to select regulatory approaches that maximize net benefits (including potential economic, environmental, public health and safety effects, and other advantages; distributive impacts; and equity). Executive Order 13563 (Improving Regulation and Regulatory Review) emphasizes the importance of quantifying both costs and benefits, reducing costs, harmonizing rules, and promoting flexibility. Executive Order 12866 (Regulatory Planning and Review) defines a ''significant regulatory action,'' which requires review by the Office of Management and Budget (OMB), as ''any regulatory action that is likely to result in a rule that may: (1) Have an annual effect on the economy of $100 million or more or adversely affect in a material way the economy, a sector of the economy, productivity, competition, jobs, the environment, public health or safety, or State, local, or Tribal governments or communities; (2) Create a serious inconsistency or otherwise interfere with an action taken or planned by another agency; (3) Materially alter the budgetary impact of entitlements, grants, user fees, or loan programs or the rights and obligations of recipients thereof; or (4) Raise novel legal or policy issues arising out of legal mandates, the President's priorities, or the principles set forth in this Executive Order.''

The economic, interagency, budgetary, legal, and policy implications of this regulatory action have been examined and it has been determined not to be a significant regulatory action under Executive Order 12866.

Unfunded Mandates

The Unfunded Mandates Reform Act of 1995 requires, at 2 U.S.C. 1532, that agencies prepare an assessment of anticipated costs and benefits before issuing any rule that may result in expenditure by State, local, or Tribal governments, in the aggregate, or by the private sector, of $100 million or more (adjusted annually for inflation) in any given year. This proposed rule would have no such effect on State, local, or Tribal governments, or on the private sector.

Catalog of Federal Domestic Assistance

The Catalog of Federal Domestic Assistance program number and title for this rule are as follows: 64.005, Grants to States for Construction of State Home Facilities; 64.007, Blind Rehabilitation Centers; 64.008, Veterans Domiciliary Care; 64.009, Veterans Medical Care Benefits; 64.010, Veterans Nursing Home Care; 64.014, Veterans State Domiciliary Care; 64.015, Veterans State Nursing Home Care; 64.018, Sharing Specialized Medical Resources; 64.019, Veterans Rehabilitation Alcohol and Drug Dependence; 64.022, Veterans Home Based Primary Care; and 64.024, VA Homeless Providers Grant and Per Diem Program.

Signing Authority

The Secretary of Veterans Affairs, or designee, approved this document and authorized the undersigned to sign and submit the document to the Office of the Federal Register for publication electronically as an official document of the Department of Veterans Affairs. John R. Gingrich, Chief of Staff, Department of Veterans Affairs, approved this document on November 21, 2011, for publication.

List of Subjects in 38 CFR Part 17

Administrative practice and procedure; Alcohol abuse; Alcoholism; Claims; Day care; Dental health; Drug abuse; Government contracts; Grant programs—health; Grant programs—veterans; Health care; Health facilities; Health professions; Health records; Homeless; Mental health programs; Nursing homes; Philippines, Reporting and recordkeeping requirements; Veterans.

Dated: November 29, 2011.

Robert C. McFetridge,

Director of Regulation Policy and Management, Office of the General Counsel, Department of Veterans Affairs.

For the reasons set forth in the preamble, VA proposes to amend 38 CFR part 17 as follows:

PART 17—MEDICAL

1. The authority citation for part 17 continues to read as follows:

Authority: 38 U.S.C. 501, and as noted in specific sections.

2. Amend § 17.170 by:

a. Revising paragraph (a).

b. Removing paragraph (b).

c. Redesignating paragraph (c) as new paragraph (b) and adding a paragraph heading.

d. Redesignating paragraph (d) as new paragraph (c) and adding a paragraph heading.

e. In newly redesignated paragraph (c), removing ''paragraph (c)'' each time it appears and adding, in its place, ''paragraph (b)''.

d. Redesignating paragraph (e) as new paragraph (d) and revising newly redesignated paragraph (d).

e. Redesignating paragraph (f) as new paragraph (e) and revising newly redesignated paragraph (e).

f. Adding an authority citation at the end of the section.

The revisions and addition read as follows:

§ 17.170 Autopsies.

(a) *General.* (1) Except as otherwise provided in this section, the Director of a VA facility may order an autopsy on a decedent who died while undergoing VA care authorized by § 17.38, ''Medical Benefits Package'', or § 17.52, ''Hospital care and medical services in non-VA facilities'', if the Director determines that an autopsy is required for VA purposes for the following reasons:

(i) Completion of official records; or

(ii) Advancement of medical knowledge.

(2) VA may order an autopsy to be performed only if consent is first obtained under one of the following circumstances:

(i) Consent is granted by the surviving spouse or next of kin of the decedent;

(ii) Consent is implied where a known surviving spouse or next of kin does not respond within a specified period of time to VA's request for permission to conduct an autopsy;

(iii) Consent is implied where a known surviving spouse or next of kin does not inquire after the well-being of the deceased veteran for a period of at least 6 months before the date of the veteran's death; or

(iv) Consent is implied where there is no known surviving spouse or next of kin of the deceased veteran.

(b) *Death resulting from crime.* * * *

(c) *Jurisdiction.* * * *

(d) *Applicable law.* (1) The laws of the state where the autopsy will be performed are to be used to identify the person who is authorized to grant VA permission to perform the autopsy and, if more than one person is identified, the order of precedence among such persons.

(2) When the next of kin, as defined by the laws of the state where the autopsy will be performed, consists of a number of persons such as children, parents, brothers and sisters, etc., permission to perform an autopsy may be accepted when granted by the person in the appropriate class who assumes the right and duty of burial.

(e) *Death outside a VA facility.* The Director of a VA facility may order an autopsy on a veteran who was undergoing VA care authorized by §§ 17.38 or 17.52, and whose death did not occur in a VA facility. Such authority also includes transporting the body at VA's expense to the facility where the autopsy will be performed, and the return of the body. Consent for the autopsy will be obtained as stated in paragraph (d) of this section. The Director must determine that such autopsy is reasonably required for VA purposes for the following reasons:

(1) The completion of official records; or

(2) Advancement of medical knowledge.

(Authority: 38 U.S.C. 501, 1703, 1710)

[FR Doc. 2011–31031 Filed 12–1–11; 8:45 am]

BILLING CODE 8320–01–P

DEPARTMENT OF DEFENSE

Defense Acquisition Regulations System

48 CFR Parts 215 and 252

RIN 0750–AH47

Defense Federal Acquisition Regulation Supplement: Proposal Adequacy Checklist (DFARS Case 2011–D042)

AGENCY: Defense Acquisition Regulations System, Department of Defense (DoD).

ACTION: Proposed rule.

SUMMARY: DoD is proposing to amend the Defense Federal Acquisition Regulation Supplement to incorporate a proposal adequacy checklist for proposals in response to solicitations that require submission of certified cost or pricing data.

DATES: Comments on the proposed rule should be submitted in writing to the address shown below on or before January 31, 2012, to be considered in the formation of a final rule.

ADDRESSES: Submit comments identified by DFARS Case 2011–D042, using any of the following methods:

○ *Regulations.gov: http://www.regulations.gov.* Submit comments via the Federal eRulemaking portal by entering ''DFARS Case 2011–D042 under the heading ''Enter keyword or ID'' and selecting ''Search.'' Select the link ''Submit a Comment'' that corresponds with ''DFARS Case 2011–D042.'' Follow the instructions provided at the ''Submit a Comment'' screen. Please include your name, company name (if any), and ''DFARS Case 2011–D011'' on your attached document.

○ *E-mail: dfars@osd.mil.* Include DFARS Case 2011–D011 in the subject line of the message.

○ *Fax:* 703–614–1254.

○ *Mail:* Defense Acquisition Regulations System, Attn: Dustin Pitsch, OUSD (AT&L) DPAP/DARS, Room 3B855, 3060 Defense Pentagon, Washington, DC 20301–3060.

Comments received generally will be posted without change to *http://www.regulations.gov*, including any personal information provided. To confirm receipt of your comment(s), please check *http://www.regulations.gov*, approximately two to three days after submission to verify posting (except allow 30 days for posting of comments submitted by mail).

FOR FURTHER INFORMATION CONTACT: Mr. Dustin Pitsch, telephone 703–602–0289.

SUPPLEMENTARY INFORMATION:

I. Background

This proposed rule supports one of DoD's Better Buying Power initiatives by incorporating the requirement for a proposal adequacy checklist into the Defense Federal Acquisition Regulation Supplement (DFARS) at section 215.408, and an associated solicitation provision at DFARS 252.215–70XX, to ensure offerors take responsibility for submitting thorough, accurate, and complete proposals. The provision should be included in solicitations that require the submission of certified cost or pricing data.

II. Executive Orders 12866 and 13563

Executive Orders (E.O.s) 12866 and 13563 direct agencies to assess all costs and benefits of available regulatory alternatives and, if regulation is necessary, to select regulatory approaches that maximize net benefits (including potential economic, environmental, public health and safety effects, distributive impacts, and equity). E.O. 13563 emphasizes the importance of quantifying both costs

and benefits, of reducing costs, of harmonizing rules, and of promoting flexibility. This is a significant regulatory action and, therefore, was subject to review under section 6(b) of E.O. 12866, Regulatory Planning and Review, dated September 30, 1993. This rule is not a major rule under 5 U.S.C. 804.

III. Regulatory Flexibility Act

DoD does not expect this proposed rule to have a significant economic impact on a substantial number of small entities within the meaning of the Regulatory Flexibility Act, 5 U.S.C. 601, *et seq.* However, an Initial Regulatory Flexibility Analysis has been performed and is summarized as follows:

This proposed rule amends the DFARS to add a checklist for DoD contractors to complete under solicitations that require the submission of certified cost or pricing data, if the contracting officer chooses to use the provision. This rule will implement one of DoD's Better Buying Power initiatives.

The objective of the rule is to ensure that offerors submit thorough, accurate, and complete proposals. By completing the checklist, offerors will be able to self validate the adequacy of their proposals. The legal basis for the rule is 41 U.S.C. 1303.

The rule will apply to actions where cost and pricing data is required, at the discretion of the contracting officer. Based on data collected in FPDS–NG for FY2008–FY2010, there are on average 905 actions per year that met the criteria where the proposal adequacy checklist could be utilized. On average, 420 of those actions were with small business concerns.

The rule imposes no new reporting requirements. The rule does not duplicate, overlap, or conflict with any other Federal rules.

No alternatives were identified that would meet the objectives of the rule. Excluding the small number of small business concerns that may be subject to the rule would not be in the best interest of the small business concerns or the Government, because the proposal adequacy checklist was created directly from requirements already in the Federal Acquisition Regulation. While the checklist does not add burden, it provides a useful tool for ensuring proposal adequacy.

DoD invites comments from small business concerns and other interested parties on the expected impact of this rule on small entities.

DoD will also consider comments from small entities concerning the existing regulations in subparts affected by this rule in accordance with 5 U.S.C. 610. Interested parties must submit such comments separately and should cite 5 U.S.C. 610 (DFARS Case 2011–D042), in correspondence.

IV. Paperwork Reduction Act

The rule contains information collection requirements that require the approval of the Office of Management and Budget under the Paperwork Reduction Act (44 U.S.C. chapter 35; however, these changes to the DFARS do not impose additional information collection requirements to the paperwork burden previously approved under OMB Control Number 9000–0013, entitled ''Cost or Pricing Data Exemption Information.''

List of Subjects in 48 CFR Parts 215 and 252

Government procurement.

Mary Overstreet,

Editor, Defense Acquisition Regulations System.

Therefore, 48 CFR parts 215 and 252 are proposed to be amended as follows:

1. The authority citation for 48 CFR parts 215 and 252 continues to read as follows:

Authority: 41 U.S.C. 1303 and 48 CFR chapter 1.

PART 215—CONTRACTING BY NEGOTIATION

2. Amend Section 215.408 to add new paragraph (3) to read as follows:

215.408 Solicitation provisions and contract clauses.

* * * * *

(3) When the solicitation requires the submission of certified cost and pricing data, the contracting officer should include 252.215–70XX, Proposal Adequacy Checklist, in the solicitation.

PART 252—SOLICITATION PROVISIONS AND CONTRACT CLAUSES

3. Add section 252.215–70XX to read as follows:

252.215–70XX Proposal Adequacy Checklist.

As prescribed in 215.408(3), use the following provision:

PROPOSAL ADEQUACY CHECKLIST (DATE)

The offeror shall complete the following checklist, providing location of requested information, or an explanation of why the requested information is not provided. Completion of this checklist in no way reduces the responsibility to fully comply with all of the requirements of 41 U.S.C. chapter 35, Truthful Cost or Pricing Data, and any other special requirements of the solicitation.

PROPOSAL ADEQUACY CHECKLIST

References	Submission item	Proposal page No.	If not provided EXPLAIN (may use continuation pages)
GENERAL INSTRUCTIONS			
1. Paragraph A(1) FAR 15.408, Table 15–2, Section I.	Is there a properly completed first page of the proposal per FAR 15.408 Table 15–2 I.A or as specified in the solicitation?		
2. Paragraph A(7) FAR 15.408, Table 15–2, Section I.	Does the proposal identify the need for Government-furnished material/tooling/test equipment? Include the lending contract number and Contracting Officer contact information if known.		

PROPOSAL ADEQUACY CHECKLIST—Continued

References	Submission item	Proposal page No.	If not provided EXPLAIN (may use continuation pages)
3. Paragraph A(8) FAR 15.408, Table 15–2, Section I.	Does the proposal include identification of any CAS non-compliances, or other estimating deficiencies that may impact the proposed price?		
4. Paragraph A(8) FAR 15.408, Table 15–2, Section I.	Does the proposal disclose any other known activity that could materially impact the costs; such as, existing excess material, changes in production methods, make-or-buy decisions, company re-organizations, new business, or new technology?		
5. Paragraph B FAR 15.408, Table 15–2, Section I.	Is an Index of all certified cost or pricing data and information accompanying or identified in the proposal provided and appropriately referenced?		
6. FAR 15.403–1(b)	Are there any exceptions to submission of certified cost or pricing data pursuant to FAR 15.403–1(b)? If so, is supporting documentation included in the proposal?		
7. Paragraph C(2)(i) FAR 15.408, Table 15–2, Section I.	Does the proposal disclose the judgmental factors applied and the mathematical or other methods used in the estimate, including those used in projecting from known data?		
8. Paragraph C(2)(ii) FAR 15.408, Table 15–2, Section I.	Does the proposal disclose the nature and amount of any contingencies included in the proposed price?		
9. Paragraph D FAR 15.408, Table 15–2, Section I.	Does the proposal explain the basis of all cost estimating relationships (CERs) (labor hours or material) proposed on other than a discrete basis?		
10. Paragraphs D and E FAR 15.408, Table 15–2, Section I.	Is there a summary of total cost by element of cost and are the elements of cost cross-referenced to the supporting cost or pricing data? (Breakdowns for each cost element must be consistent with your cost accounting system.)		
11. Paragraph D FAR 15.408, Table 15–2, Section I.	Is total price by cost element provided by year? Identify if by Calendar Year (CY) or Government Fiscal Year (GFY) or both, as required.		
12. Paragraphs D and E FAR 15.408, Table 15–2, Section I.	If more than one Contract Line Item Number (CLIN) or sub Contract Line Item Number (sub-CLIN) is proposed as required by the RFP, are there summary total amounts covering all line items for each element of cost and is it cross-referenced to the supporting cost or pricing data?		
13. Paragraph E FAR 15.408, Table 15–2, Section I.	Are CLIN prices by cost element provided by year? Identify if by CY or GFY or both, as required.		
14. Paragraph E FAR 15.408, Table 15–2, Section I.	Are recurring and non-recurring costs segregated at both the CLIN/sub-CLIN and total cost levels?		
15. Paragraph F FAR 15.408, Table 15–2, Section I.	Does the proposal identify any incurred costs for work performed before the submission of the proposal?		
16. Paragraph G FAR 15.408, Table 15–2, Section I.	Is there a Government forward pricing rate agreement (FPRA)? If so, identify and include.		
COST ELEMENTS MATERIALS AND SERVICES			
17. Paragraph AFAR 15.408, Table 15–2, Section II.	Does the proposal include a description of supplies or services and the basis on which the supply or service meets the Government's requirements?		
18. Paragraph A FAR 15.408, Table 15–2, Section II.	Does the proposal include a consolidated summary of individual material and services to include the basis for pricing? The offeror's consolidated summary shall include raw materials, parts, components, assemblies, subcontracts and services to be produced or performed by others, identifying as a minimum the item, source, quantity, and price.		

PROPOSAL ADEQUACY CHECKLIST—Continued

References	Submission item	Proposal page No.	If not provided EXPLAIN (may use continuation pages)
SUBCONTRACTS (Purchased materials or services)			
19.	Does the proposal identify those actions for which assist audits have been requested by the contractor or a subcontractor and identify the request date and scheduled receipt date?		
20. FAR 15.404–3(c)	Per the thresholds of FAR 15.404–3(c), Subcontract Pricing Considerations, does the proposal include a copy of the applicable subcontractor's proposal(s)?		
21. Paragraph A FAR 15.408, Table 15–2, Section II.	Is the subcontractor Price/Cost Analysis establishing the reasonableness of each proposed subcontract included with the proposal?		
22.	If the offeror's Price/Cost Analyses are not provided with the proposal, does the proposal include a matrix identifying dates for receipt of subcontractor proposal, completion of fact finding for purposes of Price/Cost Analysis, and submission of the Price/Cost Analysis?		
COMMERCIAL ITEM DETERMINATIONS			
23. FAR 2.101 FAR 15.403–1 (b)(3) or (b)(5).	Are commercial items being proposed either at the prime or subcontractor level that would be exempt from certified cost or pricing data requirements?		
24. FAR 2.101	Has the contractor specifically identified the type of commercial item claim (FAR 2.101 commercial item definition, paragraphs (1) through (8)), and the basis on which the item meets the definition?		
25. FAR 2.101 FAR 15.403–1	For modified commercial items (FAR 2.101 commercial item definition paragraph (3)); did the contractor classify the modification(s) as either— • A modification of a type customarily available in the commercial marketplace (paragraph (3)(i)); or • A minor modification (paragraph (3)(ii)) of a type not customarily available in the commercial marketplace made to meet Federal Government requirements not exceeding the thresholds in FAR 15.403–1(c)(3)(iii)(B)? (see note below)		
26. FAR 2.101	For proposed commercial items "of a type", or "evolved" or modified (FAR 2.101 commercial item definition paragraphs (1) through (3)), did the contractor provide a technical description of the differences between the proposed item and the comparison item(s)?		
27. FAR 15.402(a)(2) FAR 15.403–1(c)(3)(ii) FAR 15.403–3(c) FAR 15.404–3(b) FAR 15.404–3(c) FAR 15.406–2.	Does the proposal include a determination of price reasonableness for all commercial items offered?		
ADEQUATE PRICE COMPETITION			
28. Paragraph A(1) FAR 15.408, Table 15–2, Section II.	Does the proposal support the degree of competition and the basis for establishing the source and reasonableness of price for each subcontract or purchase order priced on a competitive basis exceeding the threshold for certified cost or pricing data?		
INTERORGANIZATIONAL TRANSFERS			
29. Paragraph A.(2) FAR 15.408, Table 15–2, Section II.	For inter-organizational transfers proposed at cost, does the proposal include a complete cost proposal in compliance with Table 15–2?		

PROPOSAL ADEQUACY CHECKLIST—Continued

References	Submission item	Proposal page No.	If not provided EXPLAIN (may use continuation pages)
30. FAR 31.205–26(e) FAR 15.403–1	For inter-organizational transfers proposed at price in accordance with FAR 31.205–26(e), does the proposal provide an analysis by the prime that supports the exception from certified cost or pricing data in accordance with FAR 15.403–1?		
DIRECT LABOR			
31. Paragraph B FAR 15.408, Table 15–2, Section II.	Does the proposal include a time phased (*i.e.*; monthly, quarterly) breakdown of labor hours, rates and costs by category or skill level? If labor is the allocation base for indirect costs, the labor cost must be summarized in order that the applicable overhead rate can be applied.		
32. Paragraph B FAR 15.408, Table 15–2, Section II.	For labor Basis of Estimates (BOEs), does the proposal include labor categories, labor hours, task descriptions, Statement of Work reference, applicable CLIN, Work Breakdown Structure, rationale for estimate, applicable history, and time-phasing?		
33. Paragraphs B and C, FAR 15.408, Table 15–2, Section II.	Does the proposal include all rates and factors by year that are utilized in the development of the proposal and the basis of those rates and factors (FPRA/FPRP)? The Offeror shall identify the official submittal of such rate and factor data.		
34. FAR subpart 22.10	If covered by the Service Contract Labor Standards statute (41 U.S.C. chapter 67), are the rates in the proposal in compliance with the minimum rates specified in the statute?		
INDIRECT COSTS			
35. Paragraph C FAR 15.408, Table 15–2, Section II.	Does the proposal indicate the basis of estimate for proposed indirect costs? (Support for the indirect rates could consist of cost breakdowns, trends, and budgetary data.)		
OTHER COSTS			
36. Paragraph D FAR 15.408, Table 15–2, Section II.	Does the proposal include other direct costs and the basis for pricing? If travel is included does the proposal include number of trips, number of people, number of days per trip, locations, and rates (*e.g.* airfare, per diem, hotel, car rental, etc)?		
37. Paragraph E FAR 15.408, Table 15–2, Section II.	If royalties exceed $1,500 does the proposal provide the information/data identified by Table 15–2?		
38. Paragraph F FAR 15.408, Table 15–2, Section II.	When facilities capital cost of money is proposed, does the proposal include submission of Form CASB-CMF or reference to an FPRP/FPRA and show the calculation of the proposed amount?		
FORMATS FOR SUBMISSION OF LINE ITEM SUMMARIES			
39. FAR 15.408, Table 15–2, Section III	Are all cost element breakdowns provided using the applicable format prescribed in FAR 15.408, Table 15–2 III? (or alternative format if specified in the RFP)		
40. Paragraph B FAR 15.408, Table 15–2, Section III.	If the proposal is for a modification or change order, have cost of work deleted (credits) and cost of work added (debits) been provided in the format described in FAR 15.408, Table 15–2.III.B?		
41. Paragraph C FAR 15.408, Table 15–2, Section III.	For price revisions/redeterminations, does the proposal follow the format in FAR 15.408, Table 15–2.III.C?		

PROPOSAL ADEQUACY CHECKLIST—Continued

References	Submission item	Proposal page No.	If not provided EXPLAIN (may use continuation pages)
	OTHER		
42. FAR 16.4	If an incentive contract type, does the proposal include offeror proposed target cost, target profit or fee, share ratio, and, when applicable, minimum/maximum fee, ceiling price?		
43. FAR 15.404–4(c)(4)(i)	Is proposed fee in accordance with statutory guidance?		
44. FAR 16.203–4(a)(1)	If Economic Price Adjustments are being proposed, does the proposal show the rationale and application for the proposed indices?		
45. FAR 32.1000	If the offeror is proposing Performance-Based Payments have they provided an expenditure profile, proposed events and their projected dates, proposed values for each event, completion criteria, and identification of which events are severable or cumulative?		
46. FAR 15.408(n)	Excessive Pass-through Charges—Identification of Subcontract Effort: If the offeror intends to subcontract more than 70% of the total cost of work to be performed, does the proposal identify: (i) The amount of the offeror's indirect costs and profit applicable to the work to be performed by the proposed subcontractor(s); and (ii) a description of the added value provided by the offeror as related to the work to be performed by the proposed subcontractor(s)?		
47.	Does the proposal identify the location and point of contact for any certified cost or pricing data referenced in, but not provided with, the proposal?		

(End of provision)

[FR Doc. 2011–30907 Filed 12–1–11; 8:45 am]

BILLING CODE 5001–06–P

Notices

Federal Register

Vol. 76, No. 232

Friday, December 2, 2011

This section of the FEDERAL REGISTER contains documents other than rules or proposed rules that are applicable to the public. Notices of hearings and investigations, committee meetings, agency decisions and rulings, delegations of authority, filing of petitions and applications and agency statements of organization and functions are examples of documents appearing in this section.

DEPARTMENT OF AGRICULTURE

Submission for OMB Review; Comment Request

November 29, 2011.

The Department of Agriculture has submitted the following information collection requirement(s) to OMB for review and clearance under the Paperwork Reduction Act of 1995, Public Law 104–13. Comments regarding (a) whether the collection of information is necessary for the proper performance of the functions of the agency, including whether the information will have practical utility; (b) the accuracy of the agency's estimate of burden including the validity of the methodology and assumptions used; (c) ways to enhance the quality, utility and clarity of the information to be collected; (d) ways to minimize the burden of the collection of information on those who are to respond, including through the use of appropriate automated, electronic, mechanical, or other technological collection techniques or other forms of information technology should be addressed to: Desk Officer for Agriculture, Office of Information and Regulatory Affairs, Office of Management and Budget (OMB), *OIRA_Submission@OMB.EOP.GOV* or fax (202) 395–5806 and to Departmental Clearance Office, USDA, OCIO, Mail Stop 7602, Washington, DC 20250–7602. Comments regarding these information collections are best assured of having their full effect if received within 30 days of this notification. Copies of the submission(s) may be obtained by calling (202) 720–8958.

An agency may not conduct or sponsor a collection of information unless the collection of information displays a currently valid OMB control number and the agency informs potential persons who are to respond to the collection of information that such persons are not required to respond to the collection of information unless it displays a currently valid OMB control number.

Animal and Plant Health Inspection Service

Title: Importation of Tomatoes From Souss-Massa-Draa, Morocco.

OMB Control Number: 0579–0345.

Summary of Collection: Under the Plant and Protection Act (7 U.S.C. 7701), the Secretary of Agriculture is authorized to carry out operation or measures to detect, eradicate, suppress, control, prevent, or retard the spread of plant pests new to the United States not known to be widely distributed throughout the United States. Currently, the regulations in 319.56–28(c) authorized the importation of pink tomatoes from the provinces of El Jadida and Safi in Morocco, and the province of Dahkla in Western Sahara into the United States subject to a systems approach. This approach requires pest-free growing structures, growth in specified regions, shipping date restrictions, packinghouse safeguards, and the export of only pink tomatoes.

Need and Use of the Information: The Animal and Plant Health Inspection Service (APHIS) will use the following information activity to allow for the importation of commercial consignments of tomatoes from the Souss-Massa-Draa region of Morocco into the United States while continuing to provide protection against the introduction of quarantine pests: Phytosanitary Certificate (foreign) with Declaration, Records of Trap Placement and Medfly Captures, Inspection of Traps, and Labeling Identifying Production Site. If this information is not collected, APHIS' ability to protect the United States from exotic insect pests would be severely compromised.

Description of Respondents: Foreign Government, Business or other for-profit.

Number of Respondents: 10.

Frequency of Responses: Reporting: On occasion.

Total Burden Hours: 391.

Animal and Plant Health Inspection Service

Title: Importation of Eggplant From Israel.

OMB Control Number: 0579–0350.

Summary of Collection: Under the Plant and Protection Act (7 U.S.C. 7701), the Secretary of Agriculture is authorized to carry out operation or measures to detect, eradicate, suppress, control, prevent, or retard the spread of plant pests new to the United States not known to be widely distributed throughout the United States. The Israeli National Plant Protection Organization (NPPO) has requested that the Animal and Plant Health Inspection Service (APHIS) amend the regulations to allow fresh eggplant (*Solanum Melongena L.*) to be imported from Israel into the continental United States. APHIS' fruits and vegetables regulations allow the importation of commercial shipments of fresh eggplant from Israel. As a condition of entry, the eggplant must be grown under a system approach that would include requirements for pest exclusion at the production site, fruit fly trapping inside and outside the production site, and pest-excluding packinghouse procedures.

Need and Use of the Information: APHIS will use the following information activities to allow for the importation of commercial consignments of fresh eggplant from Israel into the United States while continuing to provide protection against the introduction of quarantine pests: Phytosanitary Certificate (foreign) Trapping Records; Inspection of Pest-Exclusionary Structures by Israel NPPO's, and Labeling of Boxes. Failure to collect this information would cripple APHIS' ability to ensure that eggplant from Israel is not carrying plant pests.

Description of Respondents: Foreign Government, Business or other for-profit.

Number of Respondents: 2.

Frequency of Responses: Reporting: On occasion.

Total Burden Hours: 4.

Ruth Brown,

Departmental Information Collection Clearance Officer.

[FR Doc. 2011–31033 Filed 12–1–11; 8:45 am]

BILLING CODE 3410–34–P

DEPARTMENT OF AGRICULTURE

Submission for OMB Review; Comment Request

November 29, 2011.

The Department of Agriculture has submitted the following information collection requirement(s) to OMB for

review and clearance under the Paperwork Reduction Act of 1995, Public Law 104–13. Comments regarding (a) whether the collection of information is necessary for the proper performance of the functions of the agency, including whether the information will have practical utility; (b) the accuracy of the agency's estimate of burden including the validity of the methodology and assumptions used; (c) ways to enhance the quality, utility and clarity of the information to be collected; (d) ways to minimize the burden of the collection of information on those who are to respond, including through the use of appropriate automated, electronic, mechanical, or other technological collection techniques or other forms of information technology should be addressed to: Desk Officer for Agriculture, Office of Information and Regulatory Affairs, Office of Management and Budget (OMB), New Executive Office Building, Washington, DC; *OIRA_Submission@OMB.EOP.GOV* or fax (202) 395–5806 and to Departmental Clearance Office, USDA, OCIO, Mail Stop 7602, Washington, DC 20250–7602. Comments regarding these information collections are best assured of having their full effect if received within 30 days of publication of this notification. Copies of the submission(s) may be obtained by calling (202) 720–8681.

An agency may not conduct or sponsor a collection of information unless the collection of information displays a currently valid OMB control number and the agency informs potential persons who are to respond to the collection of information that such persons are not required to respond to the collection of information unless it displays a currently valid OMB control number.

National Agriculture Statistics Service

Title: Childhood Injury and Adult Occupational Survey.

OMB Control Number: 0535–0235.

Summary of Collection: Primary function of the National Agricultural Statistics Services (NASS) is to prepare and issue state and national estimates of crop and livestock production under the authority of 7 U.S.C 2204(a). NASS has been asked by the National Institute of Occupational Safety Health (NIOSH) to conduct a childhood injury and adult occupational injury survey. Together the survey's are designed to: (1) Provide estimates of childhood nonfatal injury incidence rates, annual injury frequencies, and descriptive injury information for children under the age of 20 living on, working on, or visiting on farming operations in the U.S.; and (2) provide estimates of the annual occupational adult nonfatal injury incidence rates, annual occupational injury frequencies and descriptive injury information for farm operators and their employees 20 years of age or older.

Need and Use of the Information: Data from these survey's will provide a source of consistent information that NIOSH can use to target funds appropriated by Congress for the prevention of childhood agricultural injuries and adult occupational injuries. No source of data on childhood injuries or adult occupational farm injuries exists that covers all aspects of the agricultural production sector.

Description of Respondents: Farms.

Number of Respondents: 25,000.

Frequency of Responses: Reporting: Annually.

Total Burden Hours: 7,667.

Charlene Parker,

Departmental Information Collection Clearance Officer.

[FR Doc. 2011–31037 Filed 12–1–11; 8:45 am]

BILLING CODE 3410–20–P

DEPARTMENT OF AGRICULTURE

Submission for OMB Review; Comment Request

November 29, 2011.

The Department of Agriculture has submitted the following information collection requirement(s) to OMB for review and clearance under the Paperwork Reduction Act of 1995, Public Law 104–13. Comments regarding (a) whether the collection of information is necessary for the proper performance of the functions of the agency, including whether the information will have practical utility; (b) the accuracy of the agency's estimate of burden including the validity of the methodology and assumptions used; (c) ways to enhance the quality, utility and clarity of the information to be collected; (d) ways to minimize the burden of the collection of information on those who are to respond, including through the use of appropriate automated, electronic, mechanical, or other technological collection techniques or other forms of information technology should be addressed to: Desk Officer for Agriculture, Office of Information and Regulatory Affairs, Office of Management and Budget (OMB), *OIRA_Submission@OMB.EOP.GOV* or fax (202) 395–5806 and to Departmental Clearance Office, USDA, OCIO, Mail Stop 7602, Washington, DC 20250–7602. Comments regarding these information collections are best assured of having their full effect if received within 30 days of this notification. Copies of the submission(s) may be obtained by calling (202) 720–8958.

An agency may not conduct or sponsor a collection of information unless the collection of information displays a currently valid OMB control number and the agency informs potential persons who are to respond to the collection of information that such persons are not required to respond to the collection of information unless it displays a currently valid OMB control number.

Foreign Agricultural Service

Title: Sugar Imported for Exports as Refined Sugar or as a Sugar-Containing Product, or Used in Production of Certain Polyhydric Alcohols.

OMB Control Number: 0551–0015.

Summary of Collection: Regulation 7 CFR Part 1530 authorizes the Foreign Agricultural Service (FAS) to issue import licenses to enter raw cane sugar exempt from the tariff-rate quota (TRQ) for the raw cane sugar imports and related requirements on the condition that an equivalent quantity of refined sugar be: (1) Exported as refined sugar; (2) exported as an ingredient in sugar containing products; or (3) used in production of certain polyhydric alcohols. The purpose of the sugar import-licensing program is to assist U.S. sugar manufacturers, refiners, and processors in making U.S. products price competitive on the world market; and facilitate the use of domestic refining capacity.

Need and Use of the Information: FAS will collect information to verify that the world-priced sugar is actually exported and not diverted onto the domestic market, thereby undermining the objectives of politically sensitive U.S. sugar policies. This collection enables USDA to monitor participants in an effort to ensure compliance with Program parameters. Without the collection, there would be increased opportunity to purposely divert sugar onto the domestic market.

Description of Respondents: Business or other for-profit.

Number of Respondents: 202.

Frequency of Responses: Reporting; Quarterly; Annually.

Total Burden Hours: 410.

Foreign Agricultural Service

Title: Specialty Sugar Certificate Application.

OMB Control Number: 0551–0025.

Summary of Collection: The collection of information is necessary to fulfill the legal obligations of the

regulation at 15 CFR 2011 subpart B to issue specialty sugar certificates, letters to importers signed by the Foreign Agricultural Service (FAS) Certifying Authority, and ensuring that U.S. importers comply with the program's requirements. The regulation sets forth the terms and conditions under which the Certifying Authority in FAS issues certificates to importers allowing them to enter specialty sugars under the tariff-rate quota (TRQ) for refined sugar.

Need and Use of the Information: The collected information will be used to: (1) Determine whether applicants for the program meet the regulation's eligibility criteria; (2) ensure that sugar to be imported is specialty sugar and meets the requirements of the regulation; (3) audit participants' compliance with the regulation; and (4) prevent entry of world-priced program sugar from entering the domestic commercial market instead of domestic specialty sugar market. The Certifying Authority needs the information to manage, plan, evaluate, and account for program activities.

Description of Respondents: Business or other for-profit.

Number of Respondents: 41.

Frequency of Responses: Reporting: Annually.

Total Burden Hours: 45.

Ruth Brown,

Departmental Information Collection Clearance Officer.

[FR Doc. 2011–31039 Filed 12–1–11; 8:45 am]

BILLING CODE 3410–10–P

DEPARTMENT OF AGRICULTURE

Submission for OMB Review; Comment Request

November 29, 2011.

The Department of Agriculture has submitted the following information collection requirement(s) to OMB for review and clearance under the Paperwork Reduction Act of 1995, Public Law 104–13. Comments regarding (a) whether the collection of information is necessary for the proper performance of the functions of the agency, including whether the information will have practical utility; (b) the accuracy of the agency's estimate of burden including the validity of the methodology and assumptions used; (c) ways to enhance the quality, utility and clarity of the information to be collected; (d) ways to minimize the burden of the collection of information on those who are to respond, including through the use of appropriate automated, electronic, mechanical, or other technological collection techniques or other forms of information technology should be addressed to: Desk Officer for Agriculture, Office of Information and Regulatory Affairs, Office of Management and Budget (OMB), *OIRA_Submission@OMB.EOP.GOV* or fax (202) 395–5806 and to Departmental Clearance Office, USDA, OCIO, Mail Stop 7602, Washington, DC 20250–7602. Comments regarding these information collections are best assured of having their full effect if received within 30 days of this notification. Copies of the submission(s) may be obtained by calling (202) 720–8958.

An agency may not conduct or sponsor a collection of information unless the collection of information displays a currently valid OMB control number and the agency informs potential persons who are to respond to the collection of information that such persons are not required to respond to the collection of information unless it displays a currently valid OMB control number.

Office of Procurement and Property Management

Title: Guidelines for Designating Biobased Products for Federal Procurement.

OMB Control Number: 0503–0011.

Summary of Collection: Section 9002 of the Farm Security and Rural Investment Act (FSRIA) of 2002, as amended by the Food, Conservation, and Energy Act (FCEA) of 2008, provides for a preferred procurement program under which Federal agencies are required to purchase biobased products, with certain exceptions. Items (which are generic groupings of products) are designated by rulemaking for preferred procurement. To qualify items for procurement under this program, the statute requires that the Secretary of Agriculture consider information on the availability of items, the economic and technological feasibility of using such items and the life cycle costs of using such items. In addition, the Secretary is required to provide information on designated items to Federal agencies about the availability, relative price, performance, and environmental and public health benefits of such items and where appropriate shall recommend the level of biobased material to be contained in the procured product.

Need and Use of the Information: The Office of Procurement and Property Management (OPPM) and the Center for Industrial Research and Service at Iowa State University will interact with manufacturers and venders to gather such information and material for testing, as may be required for designation of items for preferred procurement by Federal agencies. The information collected will be gathered using a variety of methods, including face to face visits with a manufacturer or vendor, submission by manufacturers and vendors of information electronically to OPPM, and survey instruments filled out by manufacturers and vendors and submitted to OPPM.

Description of Respondents: Business or other for-profit.

Number of Respondents: 75.

Frequency of Responses: Reporting: Other (once).

Total Burden Hours: 7,800.

Ruth Brown,

Departmental Information Collection Clearance Officer.

[FR Doc. 2011–31038 Filed 12–1–11; 8:45 am]

BILLING CODE 3410–TX–P

DEPARTMENT OF AGRICULTURE

Agricultural Research Service

Notice of Intent To Grant Exclusive License

AGENCY: Agricultural Research Service, USDA.

ACTION: Notice of intent.

SUMMARY: Notice is hereby given that the U.S. Department of Agriculture, Agricultural Research Service, intends to grant to DICKEY-john Corporation of Auburn, Illinois, an exclusive license to U.S. Patent No. 6,691,563, ''Universal Dielectric Calibration Method and Apparatus for Moisture Content Determination in Particulate and Granular Materials,'' issued on February 17, 2004 and to U.S. Patent Application Serial No. 12/782,079, ''Microwave Sensor and Algorithm for Moisture and Density Determination,'' filed on May 18, 2010.

DATES: Comments must be received on or before January 3, 2012.

ADDRESSES: Send comments to: USDA, ARS, Office of Technology Transfer, 5601 Sunnyside Avenue, Rm. 4–1174, Beltsville, Maryland 20705–5131.

FOR FURTHER INFORMATION CONTACT: June Blalock of the Office of Technology Transfer at the Beltsville address given above; telephone: (301) 504–5989.

SUPPLEMENTARY INFORMATION: The Federal Government's patent rights in these inventions are assigned to the United States of America, as represented by the Secretary of Agriculture. It is in the public interest to so license this invention as DICKEY-john Corporation of Auburn, Illinois has submitted a complete and sufficient application for

a license. The prospective exclusive license will be royalty-bearing and will comply with the terms and conditions of 35 U.S.C. 209 and 37 CFR 404.7. The prospective exclusive license may be granted unless, within thirty (30) days from the date of this published Notice, the Agricultural Research Service receives written evidence and argument which establishes that the grant of the license would not be consistent with the requirements of 35 U.S.C. 209 and 37 CFR 404.7.

Richard J. Brenner,

Assistant Administrator.

[FR Doc. 2011–30967 Filed 12–1–11; 8:45 am]

BILLING CODE 3410–03–P

DEPARTMENT OF AGRICULTURE

Economic Research Service

Notice of Intent To Request New Information Collection

AGENCY: Economic Research Service, USDA.

ACTION: Notice and request for comments.

SUMMARY: In accordance with the Paperwork Reduction Act of 1995, this notice invites the general public and other public agencies to send comments regarding any aspect of this proposed information collection. This is a new collection for a generic clearance that will allow the Economic Research Service to conduct a variety of quantitative data collections.

DATES: Written comments on this notice must be received on or before January 31, 2012 to be assured of consideration.

ADDRESSES: Address all comments concerning this notice to Nathaniel Higgins, Resource and Rural Economics Division, Economic Research Service, U.S. Department of Agriculture, 355 E St. SW., Room 6S-18, Washington, DC 20472. Comments may also be submitted via fax to the attention of Nathaniel Higgins at (202) 694–5602 or via email to *nhiggins@ers.usda.gov*. Comments will also be accepted through the Federal eRulemaking Portal. Go to *http://www.regulations.gov*, and follow the online instructions for submitting comments electronically.

FOR FURTHER INFORMATION CONTACT: For further information contact Nathaniel Higgins at the address in the preamble. Tel. (202) 694–5602.

SUPPLEMENTARY INFORMATION: All written comments will be open for public inspection at the office of the Economic Research Service during regular business hours (8:30 a.m. to 5 p.m., Monday through Friday) at 355 E St. SW., Room 6S–18, Washington, DC 20472.

All responses to this notice will be summarized and included in the request for Office of Management and Budget approval. All comments and replies will be a matter of public record. Comments are invited on: (a) Whether the proposed collection of information is necessary for the proper performance of the functions of the agency, including whether the information shall have practical utility; (b) the accuracy of the agency's estimate of the burden of the proposed collection of information, including the validity of the methodology and assumptions used; (c) ways to enhance the quality, utility, and clarity of the information to be collected; and (d) ways to minimize the burden of the collection of information on those who are to respond, including use of appropriate automated, electronic, mechanical, or other technological collection techniques or other forms of information technology.

Title: Formative Data Collections for Informing Policy Research.

OMB Number: 0536–XXXX.

Expiration Date: Three years from the date of approval.

Type of Request: New collection.

Abstract: The anticipated generic clearance will authorize research in furtherance of an ongoing initiative to use insights from behavioral economics to provide economic intelligence, research, and analysis to inform agricultural resource and conservation policies, including those related to development of markets and incentives for environmental services, reduced greenhouse gas emissions and renewable energy production, and to improve food choices and weight outcomes, particularly among children and low income adults.

The specific purpose of this generic clearance is to allow ERS to develop and implement state-of-the-art research methodologies to evaluate policies for its customers in response to both specific requests and in anticipation of future need. This generic clearance will be particularly useful when ERS is tasked with evaluating prospective policies.

ERS envisions using a number of research techniques, as appropriate to the individual investigation. These include laboratory and field techniques, exploratory interviews, pilot experiments, and respondent debriefing. In all cases, participation will be voluntary and time commitments will be minimal (10–90 minutes). Laboratory and field techniques are two methodologies based on comparison of outcomes over groups that have been randomized into different treatments.

Information obtained from randomized comparison studies (lab and field techniques) will be used to develop and calibrate models of behavior. ERS uses behavioral models to estimate a variety of policy outcomes, for instance the level of farmer participation in voluntary conservation programs under alternative contract terms or changes in the nutritional quality of meals chosen when healthy items are displayed more prominently. Variation in behavioral response can have important implications for performance measures such as economic efficiency and effectiveness, and can help predict unintended consequences of policy-design options. Improved models of behavior will help policymakers and program managers as they face decisions that affect agriculture, nutrition and the environment.

Authority: These data will be collected under the authority of 7 U.S.C. 2204(a) and sec. 501 of the Rural Development Act of 1972 (7 U.S.C. 2661). Individually identifiable data collected under this authority are governed by 7 U.S.C. 2276, which requires USDA to afford strict confidentiality to non-aggregated data provided by respondents. This Notice is submitted in accordance with the Paperwork Reduction Act of 1995, Public Law 104–13 (44 U.S.C. 3501, *et seq.*) and Office of Management and Budget regulations at 5 CFR part 1320. ERS also complies with OMB Implementation Guidance, ''Implementation Guidance for Title V of the E–Government Act, Confidential Information Protection and Statistical Efficiency Act of 2002 (CIPSEA)'', 72 FR 33362, June 15, 2007.

Affected Public: Respondents will include Individuals and households.

Estimated Number of Respondents and Respondent Burden

The proposed generic clearance will enable a number of separate data collections. No data collection is estimated to take longer than 90 minutes per respondent, including the time required for respondents and non-respondents to review instructions and participate in the data collection.

The estimated number of respondents participating in data collections under this generic clearance over a three year period is 1,800. The maximum total estimated response burden for all of those participating in the study is 2,300 hours.

Dated: November 9, 2011.

Mary Bohman,

Acting Administrator, Economic Research Service.

[FR Doc. 2011–30969 Filed 12–1–11; 8:45 am]

BILLING CODE 3410–18–P

COMMISSION ON CIVIL RIGHTS

Notice of a Public Meeting of the Wyoming Advisory Committee to the U.S. Commission on Civil Rights

Notice is hereby given, pursuant to the provisions of the rules and regulations of the U.S. Commission on Civil Rights (Commission) and the Federal Advisory Committee Act (FACA) that a planning meeting of the Wyoming Advisory Committee to the Commission (Committee) will convene by conference call at 10 a.m. (MDT) on Monday, December 19, 2011. The purpose of the meeting is to discuss next steps after project selection.

This meeting is available to the public through the following toll-free call-in number: (800) 516–9896, conference ID: 8334. Any interested member of the public may call this number and listen to the meeting. Callers can expect to incur charges for calls they initiate over wireless lines, and the Commission will not refund any incurred charges. Callers will incur no charge for calls they initiate over land-line connections to the toll-free telephone number. Persons with hearing impairments may also follow the proceedings by dialing 711 for relay services and 1-(800) 516–9896, followed by Conference ID: 8334.

Members of the public are entitled to submit written comments; the comments must be received in the regional office by January 19, 2012. Comments may be mailed to the Rocky Mountain Regional Office, U.S. Commission on Civil Rights, 999 - 18th Street, Suite 1380 South, Denver, CO 80202, faxed to (303) 866–1050, or emailed to *ebohor@usccr.gov.* Persons who desire additional information may contact the Rocky Mountain Regional Office by email at *ebohor@usccr.gov* or by phone at (303) 866–1040.

Records generated from this meeting may be inspected and reproduced at the Rocky Mountain Regional Office, as they become available, both before and after the meeting. Persons interested in the work of the Committee are directed to the Commission's Web site, *http://www.usccr.gov,* or may contact the Rocky Mountain Regional Office at the above email or street address.

To ensure that the Commission secures an appropriate number of telephone lines for the public, persons are asked to contact the Rocky Mountain Regional Office 10 days before the meeting date either by email at *ebohor@usccr.gov,* or by phone at (303) 866–1040.

The meeting will be conducted pursuant to the rules and regulations of the Commission and FACA.

Dated in Washington, DC, November 28, 2011.

Peter Minarik,

Acting Chief, Regional Programs Coordination Unit.

[FR Doc. 2011–30979 Filed 12–1–11; 8:45 am]

BILLING CODE 6335–01–P

DEPARTMENT OF COMMERCE

Submission for OMB Review; Comment Request

The Department of Commerce will submit to the Office of Management and Budget (OMB) for clearance the following proposal for collection of information under the provisions of the Paperwork Reduction Act (44 U.S.C. chapter 35).

Agency: U.S. Census Bureau.

Title: 2012 Survey of Income and Program Participation Computer Audio Recorded Interviewing Field Test.

OMB Control Number: None.

Form Number(s): SIPP–CARI 2012 DR 105(L)—Director's Letter English; SIPP–CARI 2012 DR 105(L)(SP) 2012—Director's Letter Spanish; SIPP–EHC 4006A Brochure ''SIPP You Represent Your Nation;'' SIPP/CARI Automated Instrument.

Type of Request: New collection.

Burden Hours: 1,890.

Number of Respondents: 1,890.

Average Hours per Response: 1 hour.

Needs and Uses: The U.S. Census Bureau requests authorization from the Office of Management and Budget (OMB) to conduct a Computer Audio Recorded Interviewing (CARI) technology field test using the 2012 Survey of Income and Program Participation Event History Calendar (SIPP–EHC) Field Test questionnaire.

Computer Audio Recorded Interviewing is a data collection method that captures audio along with response data during computer-assisted personal and telephone interviews (CAPI & CATI). A portion of each interview is recorded unobtrusively, with the respondent's consent, and the sound file is returned with the response data to a central location. By reviewing the recorded portions of the interview, quality assurance (QA) analysts can evaluate the likelihood that the exchange between the field representative (FR) and respondent is authentic and follows critical survey protocol as defined by the sponsor and based on best practices.

The Census Bureau will conduct the SIPP CARI test using the 2012 SIPP–EHC automated instrument and computer-assisted personal interviewing (CAPI) in 6 of the 12 Regional Offices. The SIPP CARI questionnaire will have the recording capability in use during the interview. The only content change to the instrument is the addition of a consent question which will record the respondent's permission to audio record responses. Additionally, approximately 25 specific questions are programmed for recording for each person's interview.

This is the second CARI field test conducted by the Census Bureau. The first CARI field test was used to conduct behavior coding for the 2010 American Community Survey Content Test in late 2010. The Census Bureau is conducting this test to determine if the deployment of CARI will have any significant impact on response rates and item level responses. Previous tests for CARI have proven the capability of the technology. Other tests have also been conducted on non-voluntary surveys and proved promising. However, it is important for the Census Bureau to obtain information on the impact of this technology on data quality indicators for voluntary demographic surveys. If the test proves successful, this technology would be a major asset for all programs using computer assisted personal and telephone modes of data collection to assist in meeting quality objectives.

The 2012 SIPP CARI test will be conducted between May and June 2012. We will implement the CARI technology on a portion of the 2012 SIPP–EHC data collection instrument. This test will be conducted on a separate sample than that of the 2012 SIPP–EHC field test.

In addition to the actual recording capability, the CARI Interactive Data Access System has been developed as a monitoring system that allows for the analysis of audio and image files to be conducted immediately after completion and transmission of the interview. The system is an innovative, integrated, multifaceted monitoring system that features a configurable web-based interface for behavior-coding, quality assurance and coaching. The system assists in coding interviews for measuring question and interviewer performance and the interaction between interviewers and respondents.

The 2012 SIPP CARI field test instrument will be evaluated in several domains including field implementation issues and data quality vis-à-vis the SIPP 2011 and 2012 field test results.

Household non-response rates and item non-response rates will be compared to the 2011 and 2012 SIPP tests. The primary focus will be to examine the impact recording has on the quality of data. In general, we will use the following methodology to evaluate the impact on data quality:

We will compare overall and item non response rates to parallel sample areas from the 2011 and 2012 SIPP evaluations. We will also recalculate and compare key estimates such as participation in Food Stamps, TANF, SSI, WIC, and Medicaid to parallel sample areas from the 2011 and 2012 SIPP evaluations. Tests of significance will be conducted for the differences in response rates and estimates and patterns of significance will be identified and analyzed further. In addition, paradata related to interview performance (length and non-response) by region, interviewer and household characteristics, and training performance will be measured to assist in the interpretation of the impact on data quality.

Results from the 2012 field test will be used to inform and make final decisions regarding the implementation of CARI as a part of the quality assurance strategy for the SIPP instrument for production beginning in 2014 as well as other reimbursable demographic surveys.

Affected Public: Individuals or households.

Frequency: One-time.

Respondent's Obligation: Voluntary.

Legal Authority: Title 13 U.S.C., Section 182.

OMB Desk Officer: Brian Harris-Kojetin, (202) 395–7314.

Copies of the above information collection proposal can be obtained by calling or writing Diana Hynek, Departmental Paperwork Clearance Officer, (202) 482–0266, Department of Commerce, Room 6616, 14th and Constitution Avenue NW., Washington, DC 20230 (or via the Internet at *dhynek@doc.gov).*

Written comments and recommendations for the proposed information collection should be sent within 30 days of publication of this notice to Brian Harris-Kojetin, OMB Desk Officer either by fax ((202) 395–7245) or email (*bharrisk@omb.eop.gov*).

Dated: November 29, 2011.

Glenna Mickelson,

Management Analyst, Office of the Chief Information Officer.

[FR Doc. 2011–31015 Filed 12–1–11; 8:45 am]

BILLING CODE 3510–07–P

DEPARTMENT OF COMMERCE

National Oceanic and Atmospheric Administration

RIN 0648–XA844

Vessel Monitoring Systems; Approved Mobile Transmitting Units and Communications Service Providers for Use in Atlantic Highly Migratory Species (HMS) Fisheries

AGENCY: National Marine Fisheries Service (NMFS), National Oceanic and Atmospheric Administration (NOAA), Commerce.

ACTION: Notice of vessel monitoring systems; type approval.

SUMMARY: This document provides notice that three mobile transmitting unit (MTU) vessel monitoring systems (VMS) that were previously approved for use in Atlantic highly migratory species (HMS) fisheries are no longer approved for use. This document also provides a list and describes relevant features of the enhanced mobile transmitting unit (E–MTU) VMS and communications service providers that are currently approved by NMFS for use by vessels participating in Atlantic HMS fisheries.

ADDRESSES: To obtain copies of the list of NMFS-approved VMS mobile transmitting units and NMFS-approved VMS communications service providers (including specifications), please contact the VMS Support Center at phone (888) 219–9228, fax (301) 427–0049, or write to NMFS Office for Law Enforcement (OLE), VMS Support Center, 8484 Georgia Avenue, Suite 415, Silver Spring, MD 20910. For more addresses regarding approved VMS, see the **SUPPLEMENTARY INFORMATION** section, under the heading VMS Provider Addresses.

FOR FURTHER INFORMATION CONTACT: The public may acquire this notice and relevant updates by calling the VMS support center, email: *ole.helpdesk@noaa.gov,* phone (888) 219–9228, fax (301) 427–0049. For questions regarding the status of VMS provider evaluations, contact Kelly Spalding, VMS Management Analyst, phone (301) 427–2300; fax (301) 427–0049. For questions regarding Atlantic HMS fisheries VMS requirements, contact Pat O'Shaughnessy, Southeast Division VMS Program Manager, at phone (727) 824–5358; fax (727) 824–5318.

SUPPLEMENTARY INFORMATION: Prior to January 2008, NMFS Office for Law Enforcement (OLE) approved for use several MTU VMS for use in fisheries nationwide, including HMS fisheries (68 FR 11534; March 11, 2003). On January 31, 2008, NMFS published in the **Federal Register** (73 FR 5813) a type approval notice listing the specifications for approved E–MTU VMS, including a requirement for two-way communication. An E–MTU is ''a transceiver or communications device, including antennae, dedicated message terminal and display, and an input device such as a keyboard installed on fishing vessels participating in the VMS requirement'' (subject to any future superseding authority) (January 31, 2008; 73 FR 5813).

In the notice at 73 FR 5813, OLE stated that ''previously installed MTUs approved under prior notices will continue to be approved for the remainder of their service life'' and that new installations ''must comply with all of the requirements'' of the notice, including the requirement to have two-way communication capability. In this issue of the **Federal Register**, NMFS published a final rule that requires fishermen to replace their previously installed MTU VMS with E–MTU VMS in Atlantic HMS fisheries by March 1, 2012. As a result of the final rule, on March 1, 2012, the following MTU VMS will no longer be approved for use in Atlantic HMS fisheries: Are Trimble Galaxy 7001 and 7005 and Thrane & Thrane Sailor VMS Silver.

Approved E–MTU VMS and Communications Service Providers

The following type-approved E–MTU VMS are approved for use in Atlantic HMS Fisheries. The list of approved E–MTU VMS and communications service providers may be updated in the future through publication of a notice in the **Federal Register**.

A. Faria WatchDog 750VMS With VTERM

The Faria WatchDog 750VMS with VTERM Features a transceiver consisting of an integrated dual model GPS/GSM/GPRS/Iridium Satellite Communicator or a single mode GPS/Iridium Satellite Communicator mounted in the wheelhouse and antennas mounted atop the vessel. The Faria VTERM is a 7 inch color touch screen display and provides the capability (if so configured) to process electronic forms, declarations, and to send email. The unit is pre-configured and tested for NOAA Fisheries Service VMS Operations.

Automatic GPS position reporting starts after transceiver installation and power activation onboard the vessel. The unit is a car-radio-sized transceiver powered by a 9.5 to 36 VDC power

supply. The unit can be configured for automatic reduced position transmissions when the vessel is stationary (*i.e.,* in port) which allows for port stays in a reduced power state and without the need for unit shut down. The unit restarts normal position transmission automatically when the vessel goes to sea.

The Faria WatchDog 750VMS has omni-directional Iridium, GPS, and GSM/GPRS antennas, providing operation from +/− 5 degrees above or below the horizon anywhere on earth. The GSM/GPRS capability (if activated) gives the system the additional ability to communicate through the AT&T GPRS wireless network where available.

A configuration option is available to automatically send daily status reports to a private email address and position reports to a secure Web site where the data is provided on a map and in tabular form. A 2-inch LCD user interface is also included with this system that displays if the MTU is operating properly and can send emergency notification messages to up to four email addresses and/or telephone numbers. A complete list of options is available from the VMS provider.

The Faria WatchDog 750VMS must be bundled with the Iridium/GSM communications service.

Faria can be contacted at (860) 608–5875 and *mark@fariawatchdog.net.*

B. Thrane & Thrane Sailor (TT–3026D) Gold VMS

The TT–3026D Gold VMS features an integrated GPS/Inmarsat-C unit. The unit is factory pre-configured for NMFS VMS operations (non-Global Maritime Distress & Safety System (non-GMDSS)). The Thrane and Thrane Gold VMS includes a marine grade monitor with keyboard and integrated mouse. Satellite commissioning services are provided by GMPCS Personal Communications Inc. personnel.

Automatic GPS position reporting starts after transceiver installation and power activation onboard the vessel. The unit is an integrated transceiver/antenna/GPS design using a floating 10 to 32 VDC power supply. The unit is configured for automatic reduced position transmissions when the vessel is stationary (*i.e.,* in port). It allows for port stays without power drain or power shut down. The unit restarts normal position transmission automatically when the vessel goes to sea.

The TT–3026D provides operation down to +/− 15 degree angles. The unit has the capability (if so configured) of two-way communications to send electronic forms and to receive email and other messages. A configuration option is available to automatically send position reports to a private address, such as a fleet management company.

The TT–3026D must be bundled with the Inmarsat-C communications service. The vessel owner will need to establish an Inmarsat-C system use contract with an approved Inmarsat-C communications service provider. The owner will be required to complete the GMPCS SERVICE AGREEMENT FOR INMARSAT VMS—NMFS SERVICES form. The owner should consult with GMPCS when completing this form.

GMPCS Personal Communications Inc. personnel will perform the following services before shipment: (1) Configure the transceiver according to OLE specifications for vessels issued permits to operate in Atlantic HMS fisheries; (2) download the predetermined NMFS position reporting and broadcast command identification numbers into the unit; (3) test the unit to ensure operation when installation has been completed on the vessel; and (4) forward the Inmarsat service provider and the transceiver identifying information to OLE.

GMPCS can be contacted at 1–(888) 664–6727 and *Contact@gmpcs-us.com.*

C. CLS America Thorium VMS TST–100

The approved configuration consists of the CLS America Thorium VMS TST–100 Transceiver and the Data Terminal Equipment (DTE) version 1.0. The DTE software is version 1.0. The CLS Thorium VMS unit and the DTE must be bundled with Halios communications (email, eforms) and position services. This configuration is enabled through the Iridium Short Burst Data (SBD) service, and is accessed through the CLS Iridium Web Portal (IWP) or machine-to-machine interface (IWS). CLS can be contacted at 1 (301) 925–4411 and *info@cls-halios.net.*

D. Stellar ST2500–G

The approved Skymate E–MTU consists of the Stellar 2500–G satellite communicator version 1.12 with MDA version 2.52, April 27, 2007, Comrod AV–57, May 2005 VHF antenna, SA–700 GPS antenna, a dedicated Dell Latitude ATG D620 PP18L modified to meet the requirements of 73 FR 5813, and when bundled with the Orbcomm mobile communications provider service.

Skymate can be reached at 866–SKYMATE and *sales@skymate.com.*

Dated: November 25, 2011.

Alan D. Risenhoover,

Director, Office of Sustainable Fisheries, National Marine Fisheries Service.

[FR Doc. 2011–30957 Filed 12–1–11; 8:45 am]

BILLING CODE 3510–22–P

DEPARTMENT OF COMMERCE

National Oceanic and Atmospheric Administration

RIN 0648–XO45

[File No. 14241]

Marine Mammals

AGENCY: National Marine Fisheries Service (NMFS), National Oceanic and Atmospheric Administration (NOAA), Commerce.

ACTION: Notice; receipt of application for permit amendment.

SUMMARY: Notice is hereby given that Dr. Peter Tyack, Woods Hole Oceanographic Institution, Woods Hole, MA has applied for an amendment to Permit No. 14241–02 to conduct research on marine mammals.

ADDRESSES: The application and related documents are available for review by selecting ''Records Open for Public Comment'' from the *Features* box on the Applications and Permits for Protected Species home page, *https://apps.nmfs.noaa.gov,* and then selecting File No. 14241 from the list of available applications.

These documents are also available upon written request or by appointment in the following office(s):

Permits, Conservation and Education Division, Office of Protected Resources, NMFS, 1315 East-West Highway, Room 13705, Silver Spring, MD 20910; phone (301) 427–8401; fax (301) 713–0376;

Northeast Region, NMFS, 55 Great Republic Drive, Gloucester, MA 01930; phone (978) 281–9300; fax (978) 281–9333; and

Southeast Region, NMFS, 263 13th Avenue South, Saint Petersburg, Florida 33701; phone (727) 824–5312; fax (727) 824–5309.

FOR FURTHER INFORMATION CONTACT: Tammy Adams or Carrie Hubard, (301) 427–8401.

SUPPLEMENTARY INFORMATION: The subject amendment to Permit No. 14241–02 is requested under the authority of the Marine Mammal Protection Act of 1972, as amended (16 U.S.C. 1361 *et seq.*), and the regulations governing the taking and importing of marine mammals (50 CFR part 216).

Permit No. 14241, issued on July 15, 2009 (74 FR 3668), authorizes the permit holder to conduct research on cetacean behavior, sound production, and responses to sound. The research methods include tagging marine mammals with an advanced digital sound recording tag that records the acoustic stimuli an animal hears and measures vocalization, behavior, and physiological parameters. Research also involves conducting sound playbacks in a carefully controlled manner and measuring animals' responses. The principal study species are beaked whales, especially Cuvier's beaked whale (*Ziphius cavirostris*), and large delphinids such as long-finned pilot whales (*Globicephala melas*), although other small cetacean species may also be studied. The locations for the field work are the Mediterranean Sea, waters off of the mid-Atlantic United States, and Cape Cod Bay. The permit has been amended twice since issuance. Amendment number 1 (Permit No. 14241–01) issued on July 27, 2010 (75 FR 47779): (1) Included authorization for collection of a skin and blubber biopsy sample from animals that are already authorized to be tagged; (2) added new species for existing projects involving tagging, playbacks, and behavioral observations; and (3) modified and clarified tagging and playback protocols and mitigation for when dependent calves are present. Amendment number 2 (Permit No. 14241–02), a minor amendment, issued on April 4, 2011, modified the sound source protocols and added zinc oxide marking for animals being tagged or biopsied. The permit, as amended, is valid through July 31, 2014.

The permit holder is requesting the permit be amended to: (1) Add one new species, Atlantic spotted dolphin (*Stenella frontalis*), for field work in waters off Georgia, North Carolina, South Carolina, and Virginia; (2) add a new project to Dtag the following species in waters off the west coast of North America: Baird's beaked whale (*Berardius bairdii*), Cuvier's beaked whale, Risso's dolphin (*Grampus griseus*), killer whale (*Orcinus orca*) and Mesoplodont beaked whales (*Mesoplodon* spp); (3) add a new procedure for marking cetaceans with zinc oxide; (4) add satellite tagging to long-finned pilot whales in approaches to the Mediterranean; and (5) switch some of the playback takes initially located in the Mediterranean and eastern North Atlantic to the same stocks of long-finned and short-finned (*G. macrorhynchus*) pilot whales in a subset of a location that is already part of the permit in waters near Cape Hatteras. The amendment would not change the expiration date of the permit.

In compliance with the National Environmental Policy Act of 1969 (42 U.S.C. 4321 *et seq.*), an initial determination has been made that the activity proposed is categorically excluded from the requirement to prepare an environmental assessment or environmental impact statement.

Concurrent with the publication of this notice in the **Federal Register**, NMFS is forwarding copies of this application to the Marine Mammal Commission and its Committee of Scientific Advisors.

Dated: November 28, 2011.

Tammy C. Adams,

Acting Chief, Permits, Conservation and Education Division, Office of Protected Resources, National Marine Fisheries Service.

[FR Doc. 2011–31036 Filed 12–1–11; 8:45 am]

BILLING CODE 3510–22–P

DEPARTMENT OF COMMERCE

National Oceanic and Atmospheric Administration

RIN 0648–XA808

Takes of Marine Mammals Incidental to Specified Activities; Marine Geophysical Survey in the Central Pacific Ocean, November, 2011 Through January, 2012

AGENCY: National Marine Fisheries Service (NMFS), National Oceanic and Atmospheric Administration (NOAA), Commerce.

ACTION: Notice; issuance of an incidental take authorization.

SUMMARY: In accordance with the Marine Mammal Protection Act (MMPA) regulation, notification is hereby given that NMFS has issued an Incidental Harassment Authorization (IHA) to Lamont-Doherty Earth Observatory (L–DEO), a part of Columbia University, for an Incidental Harassment Authorization (IHA) to take marine mammals, by harassment, incidental to conducting a marine geophysical survey in the central Pacific Ocean, November, 2011 through January, 2012.

DATES: Effective November 26, 2011 through January 19, 2012.

ADDRESSES: A copy of the IHA and application are available by writing to P. Michael Payne, Chief, Permits and Conservation Division, Office of Protected Resources, National Marine Fisheries Service, 1315 East-West Highway, Silver Spring, MD 20910–3225.

An electronic copy of the application containing a list of the references used in this document may be obtained by writing to the above address, telephoning the contact listed here (see **FOR FURTHER INFORMATION CONTACT**) or visiting the Internet at: *http://www.nmfs.noaa.gov/pr/permits/incidental.htm#applications*.

The following associated documents are also available at the same Internet address: the National Science Foundation's (NSF) final Environmental Analysis (Analysis) pursuant to Executive Order 12114, which incorporates an ''Environmental Assessment of a Marine Geophysical Survey by the R/V *Marcus G. Langseth* in the Central Pacific Ocean, November–December 2011,'' prepared by LGL Limited, on behalf of NSF and L–DEO; and a finding of no significant impact (FONSI) prepared by the NSF. NMFS prepared its own EA and FONSI, which is available at the same Internet address. Documents cited in this notice may be viewed, by appointment, during regular business hours, at the aforementioned address.

The NMFS Biological Opinion will be available online at: *http://www.nmfs.noaa.gov/pr/consultation/opinions.htm*.

FOR FURTHER INFORMATION CONTACT: Jeannine Cody, Office of Protected Resources, NMFS, (301) 427–8401.

SUPPLEMENTARY INFORMATION:

Background

Section 101(a)(5)(D) of the Marine Mammal Protect Act of 1972, as amended (MMPA; 16 U.S.C. 1361 *et seq.*) directs the Secretary of Commerce to authorize, upon request, the incidental, but not intentional, taking of small numbers of marine mammals of a species or population stock, by United States citizens who engage in a specified activity (other than commercial fishing) within a specified geographical region if certain findings are made and, if the taking is limited to harassment, a notice of a proposed authorization is provided to the public for review.

Authorization for the incidental taking of small numbers of marine mammals shall be granted if NMFS finds that the taking will have a negligible impact on the species or stock(s), and will not have an unmitigable adverse impact on the availability of the species or stock(s) for subsistence uses (where relevant). The authorization must set forth the permissible methods of taking, other means of effecting the least practicable adverse impact on the species or stock and its habitat, and requirements

pertaining to the mitigation, monitoring and reporting of such takings. NMFS has defined ''negligible impact'' in 50 CFR 216.103 as ''* * * an impact resulting from the specified activity that cannot be reasonably expected to, and is not reasonably likely to, adversely affect the species or stock through effects on annual rates of recruitment or survival.''

Section 101(a)(5)(D) of the MMPA established an expedited process by which citizens of the United States can apply for an authorization to incidentally take small numbers of marine mammals by harassment. Section 101(a)(5)(D) of the MMPA establishes a 45-day time limit for NMFS' review of an application followed by a 30-day public notice and comment period on any proposed authorizations for the incidental harassment of small numbers of marine mammals. Within 45 days of the close of the public comment period, NMFS must either issue or deny the authorization. NMFS must publish a notice in the **Federal Register** within 30 days of its determination to issue or deny the authorization.

Except with respect to certain activities not pertinent here, the MMPA defines ''harassment'' as:

> any act of pursuit, torment, or annoyance which (i) has the potential to injure a marine mammal or marine mammal stock in the wild [Level A harassment]; or (ii) has the potential to disturb a marine mammal or marine mammal stock in the wild by causing disruption of behavioral patterns, including, but not limited to, migration, breathing, nursing, breeding, feeding, or sheltering [Level B harassment].

Summary of Request

NMFS received an application on June 17, 2011, from L–DEO for the taking by harassment, of marine mammals, incidental to conducting a marine geophysical survey in the central tropical Pacific Ocean in international waters. L–DEO, with research funding from the U.S. National Science Foundation (NSF), plans to conduct the survey from November 26, 2011, through December 29, 2011. Upon receipt of additional information, NMFS determined the application complete and adequate on August 26, 2011. NMFS made the complete application available for public comment (see **ADDRESSES**) for this IHA.

L–DEO plans to use one source vessel, the R/V *Marcus G. Langseth* (*Langseth*) and a seismic airgun array to image the structure of the oceanic lithosphere (*i.e.,* the Earth's crust and the uppermost mantle) in the Central Pacific using three-dimensional (3–D) seismic reflection techniques. The *Langseth* would deploy a single hydrophone streamer and approximately 34 short-period Ocean Bottom Seismometers (OBS) to collect geophysical data. After completion of the seismic survey, the *Langseth* will recover the 34 seismometers and deploy 27 broad-band OBSs and five magneto-telluric instruments on the seafloor. These instruments will remain on the seafloor for 12 months and the scientists will recover these instruments in 2012.

In addition to the operations of the seismic airgun array, L–DEO intends to operate a multibeam echosounder (MBES) and a sub-bottom profiler (SBP) continuously throughout the survey.

Acoustic stimuli (*i.e.,* increased underwater sound) generated during the operation of the seismic airgun array, may have the potential to cause a short-term behavioral disturbance for marine mammals in the survey area. This is the principal means of marine mammal taking associated with these activities and L–DEO has requested an authorization to take 20 species of marine mammals by Level B harassment. Take is not expected to result from the use of the MBES, the SBP, the OBSs, or the magneto-telluric instruments for reasons discussed in this notice. Also, NMFS does not expect take to result from collision with the *Langseth* because it is a single vessel moving at relatively slow speeds during seismic acquisition within the survey, for a relatively short period of time. It is likely that any marine mammal would be able to avoid the vessel.

Description of the Specified Activity

L–DEO's seismic survey is scheduled to commence on November 26, 2011, and continue for approximately 35 days ending on December 29, 2011. Some minor deviation from these dates is possible, depending on logistics, weather conditions, and the need to repeat some lines if data quality is substandard. Therefore, NMFS proposes to issue an authorization that extends to January 19, 2012.

Within this time period, the *Langseth* will conduct seismic operations deploying a 36-airgun array, a 6-kilometer (km) hydrophone streamer, and 34 OBSs. The *Langseth* will depart from Honolulu, Hawai'i on November 26, 2011 and transit to the survey area in the central Pacific Ocean, approximately 1,300 km (808 mi) south of Hawai'i.

Geophysical survey activities will involve 3–D seismic methodologies to define the detailed structure of the oceanic lithosphere and to develop a comprehensive theory on its formation and evolution. To obtain 3–D images of the lithosphere in the survey area, the *Langseth* will deploy a 36-airgun array as an energy source. The receiving system consists of one 6-km-long hydrophone streamer and approximately 34 OBSs. As the airgun array is towed along the survey lines, the hydrophone streamers will receive the returning acoustic signals and transfer the data to the on-board processing system. The OBSs will receive the returning acoustic signals and record them internally for later analysis after retrieval from the seafloor.

The study (*e.g.,* equipment testing, startup, line changes, repeat coverage of any areas, and equipment recovery) will take place in water depths of approximately 5,000 meters (m) (3.1 mi). The survey will require approximately 11 days (d) to complete approximately 2,120 km (1,317.3 mi) of transect lines. The *Langseth* will shoot a 600-km-long transect line twice; once using the hydrophone streamer as the receiver and once again using the OBSs. Subsequent seismic operations will occur along two semi-circular arcs (180 degrees) centered at the mid-point of the 600-km-long transect line with radii of 50 and 150 km, respectively. The *Langseth* will conduct additional seismic operations in the survey area associated with turns, airgun testing, and repeat coverage of any areas where the initial data quality is sub-standard. Data acquisition will include approximately 264 hours (hr) of airgun operation (11 d × 24 hr).

The scientific team for this survey consists of Drs. J.B. Gaherty (L–DEO); D. Lizarralde, J.A. Collins, and R. Evans (Woods Hole Oceanographic Institution); and G. Hirth (Brown University).

NMFS expects that acoustic stimuli resulting from the operation of the single airgun or the 36-airgun array has the potential to harass marine mammals, incidental to the conduct of the seismic survey. NMFS expects these disturbances to be temporary and result in a temporary modification in behavior and/or low-level physiological effects (Level B harassment only) of small numbers of certain species of marine mammals. NMFS does not expect that the movement of the *Langseth,* during the conduct of the seismic survey, has the potential to harass marine mammals because of the relatively slow operation speed of the vessel (4.6 kts; 8.5 km/hr; 5.3 mph) during seismic acquisition.

NMFS outlined the purpose of the program in a previous notice for the proposed IHA (76 FR 57959, September 19, 2011). The activities to be conducted have not changed between the proposed IHA notice and this final notice

announcing the issuance of the IHA. For a more detailed description of the authorized action, including vessel and acoustic source specifications, the reader should refer to the proposed IHA notice (76 FR 57959, September 19, 2011), the application and associated documents referenced above this section.

Description of the Specified Geographic Region

The survey will encompass the area bounded by 7–12° N and 148–142° W in international waters in the central Pacific Ocean (see Figure 1 in L–DEO's application). Water depth in the survey area is approximately 5,000 m (3.1 mi).

Comments and Responses

A notice of receipt of the L–DEO application and proposed IHA was published in the **Federal Register** on September 19, 2011 (76 FR 57959). During the 30-day public comment period, NMFS received comments from the Marine Mammal Commission (Commission) only. The Commission's comments are online at: *http://www.nmfs.noaa.gov/pr/permits/incidental.htm*. Following are their comments and NMFS' responses.

Comment 1: The Commission recommends that the NMFS require L–DEO to re-estimate the proposed exclusion (EZs) and buffer zones and associated takes of marine mammals using site-specific information.

Response: The *Langseth* will conduct the survey in water depths where site-specific source signature requirements are neither warranted nor practical. Site signature measurements are normally conducted commercially by shooting a test pattern over an ocean bottom instrument in shallow water. This method is neither practical nor valid in water depths as great as 3,000 m (9,842.5 ft). The alternative method of conducting site-specific attenuation measurements would require a second vessel, which is impractical both logistically and financially. Sound propagation varies noticeably less between deep water sites than between shallow water sites (because of the reduced significance of bottom interaction), thus decreasing the importance of site-specific estimates.

Based on these reasons, and the information provided by USGS in their application and environmental analysis, NMFS is satisfied that the data supplied are sufficient for NMFS to conduct its analysis and make any determinations and therefore no further effort is needed by the applicant. While exposures of marine mammals to acoustic stimuli are difficult to estimate, NMFS is confident that the levels of take provided by L–DEO in their IHA application and EA, and authorized herein are estimated based upon the best available scientific information and estimation methodology. The 160 dB zone used to estimate exposure is appropriate and sufficient for purposes of supporting NMFS's analysis and determinations required under section 101(a)(5)(D) of the MMPA and its implementing regulations. See NMFS's response to Comment 2 (below) for additional details.

Comment 2: The Commission recommends that NMFS require L–DEO, if the exclusion zones (EZ) and buffer zones and takes are not re-estimated, to provide a detailed justification: (1) For basing the EZs and buffer zones for the proposed survey in the central Pacific Ocean on empirical data collected in the Gulf of Mexico (GOM) or on modeling that relies on measurements from the GOM; and (2) that explains why simple ratios were used to adjust for tow depth and median values were applied to intermediate water depths rather than using empirical measurements.

Response: Appendix A in the environmental analysis includes information from the calibration study conducted on the Langseth in 2007 and 2008. This information is now available in the final environmental assessment on NSF's Web site at *http://www.nsf.gov/geo/oce/envcomp/index.jsp*. The revised Appendix A describes the modeling process and compares the model results with empirical results of the 2007 to 2008 Langseth calibration experiment in shallow, intermediate, and deep water. The conclusions identified in Appendix A show that the model represents the actual produced levels, particularly within the first few kilometers, where the predicted exclusion zones (EZs, *i.e.,* safety radii) lie. At greater distances, local oceanographic variations begin to take effect, and the model tends to over predict. Further, since the modeling matches the observed measurement data, the authors have concluded that the models can continue to be used for defining EZs, including for predicting mitigation radii for various tow depths. The data results from the studies were peer reviewed and the calibration results, viewed as conservative, were used to determine the cruise-specific EZs.

At present, the L–DEO model does not account for site-specific environmental conditions. The calibration study of the L–DEO model predicted that using site-specific information may actually provide less conservative EZ radii at greater distances. The Draft Programmatic Environmental Impact Statement for Marine Seismic Research Funded by the National Science Foundation or Conducted by the U.S. Geological Survey (DPEIS) prepared pursuant to the National Environmental Policy Act (NEPA; 42 U.S.C. 4321 *et seq.*) did incorporate various site-specific environmental conditions in the modeling of the Detailed Analysis Areas.

The IHA issued to L–DEO, under section 101(a)(5)(D) of the MMPA provides monitoring and mitigation requirements that will protect marine mammals from injury, serious injury, or mortality. USGS is required to comply with the IHA's requirements. These analyses are supported by extensive scientific research and data. NMFS is confident in the peer-reviewed results of the L–DEO seismic calibration studies which, although viewed as conservative, are used to determine cruise-specific EZs and which factor into exposure estimates. NMFS has determined that these reviews are the best scientific data available for review of the IHA application and to support the necessary analyses and determinations under the MMPA, Endangered Species Act (ESA; 16 U.S.C. 1531 *et seq.*) and NEPA.

Based on NMFS's analysis of the likely effects of the specified activity on marine mammals and their habitat, NMFS has determined that the EZs identified in the IHA are appropriate for the survey and that additional field measurement is not necessary at this time. While exposures of marine mammals to acoustic stimuli are difficult to estimate, NMFS is confident that the levels of take authorized have been estimated based upon the best available scientific information and estimation methodology. The 160-dB zone used to estimate exposure is appropriate and sufficient for purposes of supporting NMFS's analysis and determinations required under section 101(a)(5)(D) of the MMPA and its implementing regulations.

Comment 3: The Commission recommends that NMFS require that L–DEO use species-specific maximum densities rather than best densities to re-estimate the anticipated number of takes.

Response: For purposes of this IHA, NMFS is using the best (*i.e.,* average or mean) densities to estimate the number of authorized takes for L–DEO's seismic survey in the central Pacific Ocean as NMFS is confident in the assumptions and calculations used to estimate density for this survey area. NMFS makes decisions on whether to use maximum or best densities on a case-by-case basis, depending on the nature and

robustness of existing data. Contrary to the Commission's comment in their October 19, 2011 letter to NMFS on the proposed IHA, NMFS has used best densities to estimate the number of incidental takes in IHAs for several seismic surveys in the past. The results of the associated monitoring reports show that the use of the best estimates is appropriate for and does not refute NMFS's determinations.

Comment 4: The Commission recommends that if NMFS is planning to allow the applicant to resume full power after eight minutes (min) under certain circumstances, specify in the authorization in all conditions under which an eight min period could be followed by a full-power resumption of the airguns.

Response: The IHA specifies the conditions under which the *Langseth* will resume full-power operations of the airguns. During periods of active seismic operations, there are occasions when the airguns need to be temporarily shut-down (for example due to equipment failure, maintenance, or shut-down) or a power-down is necessary (for example when a marine mammal is seen to either enter or about to enter the EZ). In these instances, should the airguns be inactive or powered-down for more than eight min, then L–DEO would follow the ramp-up procedures identified in the Mitigation section (see below) where airguns will be re-started beginning with the smallest airgun in the array and increase in steps not to exceed 6 dB per 5 min over a total duration of approximately 30 min. NMFS and NSF believe that the eight min period in question is an appropriate minimum amount of time to pass after which a ramp-up process should be followed. In these instances, should it be possible for the airguns to be re-activated without exceeding the eight min period (for example equipment is fixed or a marine mammal is visually observed to have left the EZ for the full source level), then the airguns would be reactivated to the full operating source level identified for the survey (in this case, 6,600 in ^{3}) without need for initiating ramp-up procedures. In the event a marine mammal enters the EZ and a power-down is initiated, and the marine mammal is not visually observed to have left the EZ, then L–DEO must wait 15 min (for species with shorter dive durations—small odontocetes and pinnipeds) or 30 min (for species with longer dive durations—mysticetes and large odontocetes) after the last sighting before initiating a 30-min ramp-up. However, ramp-up will not occur as long as a marine mammal is detected within the EZ, which provides more time for animals to leave the EZ, and accounts for the position, swim speed, and heading of marine mammals within the EZ.

Comment 5: The Commission recommends that NMFS extend the 30 min period following a marine mammal sighting in the EZ to cover the full dive times of all species likely to be encountered.

Response: NMFS recognizes that several species of deep-diving cetaceans are capable of remaining underwater for more than 30 min (*e.g.,* sperm whales and several types of beaked whales); however, for the following reasons NMFS believes that 30 min is an adequate length of the monitoring period prior to the ramp-up of airguns:

(1) Because the *Langseth* is required to monitor before ramp-up of the airgun array, the time of monitoring prior to the start-up of any but the smallest array is effectively longer than 30 min (ramp-up will begin with the smallest airgun in the array and airguns will be added in sequence such that the source level of the array will increase in steps not exceeding approximately 6 dB per 5-min period over a total duration of 20 to 30 min;

(2) In many cases PSVOs are observing during times when L–DEO is not operating the seismic airguns and would observe the area prior to the 30 min observation period;

(3) The majority of the species that may be exposed do not stay underwater more than 30 min; and

(4) All else being equal and if deep-diving individuals happened to be in the area in the short time immediately prior to the pre-ramp up monitoring, if an animal's maximum underwater dive time is 45 min, then there is only a one in three chance that the last random surfacing would occur prior to the beginning of the required 30 min monitoring period and that the animal would not be seen during that 30 min period.

Finally, seismic vessels are moving continuously (because of the long, towed array and streamer) and NMFS believes that unless the animal submerges and follows at the speed of the vessel (highly unlikely, especially when considering that a significant part of their movement is vertical [deep-diving]), the vessel will be far beyond the length of the EZ within 30 min, and therefore it will be safe to start the airguns again.

Under the MMPA, incidental take authorizations must include means of effecting the least practicable adverse impact on marine mammal species and their habitat. Monitoring and mitigation measures are designed to comply with this requirement. NMFS believes that the framework for visual monitoring will: (1) Be effective at spotting almost all species for which take is requested; and (2) that imposing additional requirements, such as those suggested by the Commission, would not meaningfully increase the effectiveness of observing marine mammals approaching or entering the EZs and thus further minimize the potential for take.

Comment 6: The Commission recommends that NMFS, prior to granting the requested authorization, provide additional justification for its preliminary determination that the proposed monitoring program will be sufficient to detect, with a high level of confidence, all marine mammals within or entering the identified EZs and buffer zones, including:

(1) Identifying those species that it believes can be detected with a high degree of confidence using visual monitoring only;

(2) Describing detection probability as a function of distance from the vessel;

(3) Describing changes in detection probability under various sea state and weather conditions and light levels; and

(4) Explaining how close to the vessel marine mammals must be for Protected Species Observers (PSOs) to achieve high nighttime detection rates.

Response: NMFS believes that the planned monitoring program will be sufficient to detect (using visual monitoring and passive acoustic monitoring (PAM)), with reasonable certainty, marine mammals within or entering identified EZs. This monitoring, along with the required mitigation measures, will result in the least practicable adverse impact on the affected species or stocks and will result in a negligible impact on the affected species or stocks of marine mammals. Also, NMFS expects some animals to avoid areas around the airgun array ensonified at the level of the EZ.

NMFS acknowledges that the detection probability for certain species of marine mammals varies depending on animal's size and behavior as well as sea state and weather conditions and light levels. The detectability of marine mammals likely decreases in low light (*i.e.,* darkness), higher Beaufort sea states and wind conditions, and poor weather (*e.g.,* fog and/or rain). However, at present, NMFS views the combination of visual monitoring and PAM as the most effective monitoring and mitigation techniques available for detecting marine mammals within or entering the EZ. The final monitoring and mitigation measures are the most effective feasible measures and NMFS is

not aware of any additional measures which could meaningfully increase the likelihood of detecting marine mammals in and around the EZ. Further, public comment has not revealed any additional monitoring or mitigation measures that could be feasibly implemented to increase the effectiveness of detection.

NSF and L–DEO are receptive to incorporating proven technologies and techniques to enhance the current monitoring and mitigation program. Until proven technological advances are made, nighttime mitigation measures during operations include combinations of the use of PSVOs for ramp-ups, PAM, night vision devices (NVDs), and continuous shooting of a mitigation airgun. Should the airgun array be powered-down, the operation of a single airgun would continue to serve as a sound source deterrent to marine mammals. In the event of a complete shut-down of the airgun array at night for mitigation or repairs, L–DEO suspends the data collection until one-half hour after nautical twilight-dawn (when PSVO's are able to clear the EZ). L–DEO will not activate the airguns until the entire EZ is visible for at least 30 min.

In cooperation with NMFS, L–DEO will be conducting efficacy experiments of NVDs during a future *Langseth* cruise. In addition, in response to a recommendation from NMFS, L–DEO is evaluating the use of handheld forward-looking thermal imaging cameras to supplement nighttime monitoring and mitigation practices. During other low power seismic and seafloor mapping surveys, L–DEO successfully used these devices while conducting nighttime seismic operations.

Comment 7: The Commission recommends that NMFS consult with the funding agency (*i.e.,* NSF) and individual applicants (*e.g.,* L–DEO and U.S. Geological Survey (USGS)) to develop, validate, and implement a monitoring program that provides a scientifically sound, reasonably accurate assessment of the types of marine mammal taking and number of marine mammals taken.

Response: Numerous studies have reported on the abundance and distribution of marine mammals inhabiting the central and eastern tropical Pacific Ocean, which overlaps with the seismic survey area, and L–DEO has incorporated this data into their analyses used to predict marine mammal take in their application. NMFS believes that L–DEO's current approach for estimating abundance in the survey area (prior to the survey) is the best available approach.

There will be significant amounts of transit time during the cruise, and PSVOs will be on watch prior to and after the seismic portions of the survey, in addition to during the survey. The collection of this visual observational data by PSVOs may contribute to baseline data on marine mammals (presence/absence) and provide some generalized support for estimated take numbers, but it is unlikely that the information gathered from this single cruise alone would result in any statistically robust conclusions for any particular species because of the small number of animals typically observed.

NMFS acknowledges the Commission's recommendations and is open to further coordination with the Commission, NSF (the vessel owner), and L–DEO (the ship operator on behalf of NSF), to develop, validate, and implement a monitoring program that will provide or contribute towards a more scientifically sound and reasonably accurate assessment of the types of marine mammal taking and the number of marine mammals taken. However, the cruise's primary focus is marine geophysical research and the survey may be operationally limited due to considerations such as location, time, fuel, services, and other resources.

Comment 8: The Commission recommends that NMFS require the applicant to:

(1) Report on the number of marine mammals that were detected acoustically and for which a power-down or shut-down of the airguns was initiated;

(2) Specify if such animals also were detected visually; and

(3) Compare the results from the two monitoring methods (visual versus acoustic) to help identify their respective strengths and weaknesses.

Response: The IHA requires that PSAOs on the *Langseth* do and record the following when a marine mammal is detected by the PAM:

(i) Notify the on-duty PSVO(s) immediately of a vocalizing marine mammal so a power-down or shut-down can be initiated, if required;

(ii) Enter the information regarding the vocalization into a database. The data to be entered include an acoustic encounter identification number, whether it was linked with a visual sighting, date, time when first and last heard and whenever any additional information was recorded, position, and water depth when first detected, bearing if determinable, species or species group (*e.g.,* unidentified dolphin, sperm whale), types and nature of sounds heard (*e.g.,* clicks, continuous, sporadic, whistles, creaks, burst pulses, strength of signal, *etc.*), and any other notable information.

L–DEO reports on the number of acoustic detections made by the PAM system within the post-cruise monitoring reports as required by the IHA. The report also includes a description of any acoustic detections that were concurrent with visual sightings, which allows for a comparison of acoustic and visual detection methods for each cruise. The post-cruise monitoring reports also include the following information: the total operational effort in daylight (hrs), the total operational effort at night (hrs), the total number of hours of visual observations conducted, the total number of sightings, and the total number of hours of acoustic detections conducted.

LGL Ltd., Environmental Research Associates (LGL), a contractor for L–DEO, has processed sighting and density data, and their publications can be viewed online at: *http://www.lgl.com/index.php?option=com_content&view=article&id=69&Itemid=162&lang=en*. Post-cruise monitoring reports are currently available on the NMFS's MMPA Incidental Take *Program Web site on the NSF Web site (http://www.nsf.gov/geo/oce/envcomp/index.jsp*) should there be interest in further analysis of this data by the public.

Comment 9: The Commission recommends that NMFS condition the authorization to require the L–DEO to monitor, document, and report observations during all ramp-up procedures.

Response: The IHA requires that PSVOs on the *Langseth* make observations for 30 min prior to ramp-up, during all ramp-ups, and during all daytime seismic operations and record the following information when a marine mammal is sighted:

(i) Species, group size, age/size/sex categories (if determinable), behavior when first sighted and after initial sighting, heading (if consistent), bearing and distance from seismic vessel, sighting cue, apparent reaction of the airguns or vessel (*e.g.,* none, avoidance, approach, paralleling, *etc.,* and including responses to ramp-up), and behavioral pace; and

(ii) Time, location, heading, speed, activity of the vessel (including number of airguns operating and whether in state of ramp-up or power-down), Beaufort wind force and sea state, visibility, and sun glare.

Comment 10: The Commission recommends that NMFS work with NSF to analyze these monitoring data to help determine the effectiveness of ramp-up

procedures as a mitigation measure for geophysical surveys after the data are compiled and quality control measures have been completed.

Response: One of the primary purposes of monitoring is to result in ''increased knowledge of the species'' and the effectiveness of monitoring and mitigation measures; the effectiveness of ramp-up as a mitigation measure and marine mammal reaction to ramp-up would be useful information in this regard. NMFS has asked NSF and L–DEO to gather all data that could potentially provide information regarding the effectiveness of ramp-ups as a mitigation measure. However, considering the low numbers of marine mammal sightings and low numbers of ramp-ups, it is unlikely that the information will result in any statistically robust conclusions for this particular seismic survey. Over the long term, these requirements may provide information regarding the effectiveness of ramp-up as a mitigation measure, provided animals are detected during ramp-up.

Description of the Marine Mammals in the Area of the Specified Activity

Twenty-six marine mammal species may occur in the survey area, including 19 odontocetes (toothed cetaceans), 6 mysticetes (baleen whales) and one species of pinniped during November through January. Six of these species are listed as endangered under the ESA, including the humpback (*Megaptera novaeangliae*), sei (*Balaenoptera borealis*), fin (*Balaenoptera physalus*), blue (*Balaenoptera musculus*), and sperm (*Physeter macrocephalus*) whale and the Hawaiian monk seal (*Monachus schauinslandi*).

Based on available data, it is unlikely that six out of the 26 marine mammal species would occur in the survey area, including the: Humpback, minke (*Balaenoptera acutorostrata*), fin, pygmy killer (*Feresa attenuata*), pygmy sperm (*Kogia breviceps*), or sei whale and the Hawaiian monk seal. Hawaiian monk seals have the potential to transit in the vicinity of the seismic survey, although any occurrence would be rare as they are vagrants to the area. Based on available data, L–DEO does not expect to encounter Hawaiian monk seals within the survey area and does not present analysis for these species. Accordingly, NMFS did not consider this pinniped species in greater detail. The species of marine mammals expected to be most common in the survey area (all delphinids) include the pantropical spotted dolphin (*Stenella attenuata*) and spinner dolphin (*Stenella longirostris*).

NMFS has presented a more detailed discussion of the status of these stocks and their occurrence in the central Pacific Ocean in the notice of the proposed IHA (76 FR 57959, September 19, 2011).

Potential Effects on Marine Mammals

Acoustic stimuli generated by the operation of the airguns, which introduce sound into the marine environment, may have the potential to cause Level B harassment of marine mammals in the survey area. The effects of sounds from airgun operations might include one or more of the following: Tolerance, masking of natural sounds, behavioral disturbance, temporary or permanent impairment, or non-auditory physical or physiological effects (Richardson *et al.,* 1995; Gordon *et al.,* 2004; Nowacek *et al.,* 2007; Southall *et al.,* 2007).

Permanent hearing impairment, in the unlikely event that it occurred, would constitute injury, but temporary threshold shift (TTS) is not an injury (Southall *et al.,* 2007). Although the possibility cannot be entirely excluded, it is unlikely that the project would result in any cases of temporary or permanent hearing impairment, or any significant non-auditory physical or physiological effects. Based on the available data and studies described here, some behavioral disturbance is expected, but NMFS expects the disturbance to be localized and short-term.

The notice of the proposed IHA (76 FR 57959, September 19, 2011) included a discussion of the effects of sounds from airguns on mysticetes and odontocetes including tolerance, masking, behavioral disturbance, hearing impairment, and other non-auditory physical effects. NMFS refers the reader to L–DEO's application, environmental analysis and NMFS' EA for additional information on the behavioral reactions (or lack thereof) by all types of marine mammals to seismic vessels.

Anticipated Effects on Marine Mammal Habitat

NMFS included a detailed discussion of the potential effects of this action on marine mammal habitat, including physiological and behavioral effects on marine fish and invertebrates in the notice of the proposed IHA (76 FR 57959, September 19, 2011). While NMFS anticipates that the specified activity may result in marine mammals avoiding certain areas due to temporary ensonification, this impact to habitat is temporary and reversible which NMFS considered in further detail in the notice of the proposed IHA (76 FR 57959, September 19, 2011) as behavioral modification. The main impact associated with the activity would be temporarily elevated noise levels and the associated direct effects on marine mammals.

Mitigation

In order to issue an incidental take authorization (ITA) under section 101(a)(5)(D) of the MMPA, NMFS must set forth the permissible methods of taking pursuant to such activity, and other means of effecting the least practicable adverse impact on such species or stock and its habitat, paying particular attention to rookeries, mating grounds, and areas of similar significance, and the availability of such species or stock for taking for certain subsistence uses.

L–DEO has based the mitigation measures described herein, to be implemented for the seismic survey, on the following:

(1) Protocols used during previous L–DEO seismic research cruises as approved by NMFS;

(2) Previous IHA applications and IHAs approved and authorized by NMFS; and

(3) Recommended best practices in Richardson *et al.* (1995), Pierson *et al.* (1998), and Weir and Dolman, (2007).

To reduce the potential for disturbance from acoustic stimuli associated with the activities, L–DEO and/or its designees would implement the following mitigation measures for marine mammals:

(1) Proposed exclusion zones (EZ);

(2) Power-down procedures;

(3) Shutdown procedures; and

(4) Ramp-up procedures.

Exclusion Zones—L–DEO uses safety radii to designate EZs and to estimate take for marine mammals. Table 1 shows the distances at which two sound levels (160- and 180-dB) are expected to be received from the 36-airgun array and a single airgun. The 180-dB level shut-down criterion is applicable to cetaceans, as specified by NMFS (2000); and L–DEO used these levels to establish the EZs. If the protected species visual observer (PSVO) detects marine mammal(s) within or about to enter the appropriate EZ, the *Langseth* crew will immediately power down the airgun array, or perform a shut down if necessary (see Shut-down Procedures).

Table 1 summarizes the predicted distances at which sound levels (160- and 180-dB) are expected to be received from the 36-airgun array and a single airgun operating in deep water.

TABLE 1—MEASURED (ARRAY) OR PREDICTED (SINGLE AIRGUN) DISTANCES TO WHICH SOUND LEVELS GREATER THAN OR EQUAL TO 160 AND 180 dB RE: 1 μPa_{rms} THAT COULD BE RECEIVED IN DEEP WATER USING A 36-AIRGUN ARRAY, AS WELL AS A SINGLE AIRGUN TOWED AT A DEPTH OF 9 M (29.5 FT) DURING THE SURVEY IN THE CENTRAL PACIFIC OCEAN, DURING NOVEMBER, 2011–JANUARY, 2012

[Distances are based on model results provided by L–DEO]

Source and volume	Water depth	Predicted RMS distances (m)	
		160 dB	180 dB
Single Bolt airgun (40 in^3)	Deep (> 1,000 m)	385	40
36-Airgun Array		3,850	940

Power-down Procedures—A power-down involves decreasing the number of airguns in use such that the radius of the 180-dB zone is decreased to the extent that marine mammals are no longer in or about to enter the EZ. A power down of the airgun array can also occur when the vessel is moving from one seismic line to another. During a power-down for mitigation, L–DEO will operate one airgun. The continued operation of one airgun is intended to alert marine mammals to the presence of the seismic vessel in the area. In contrast, a shut down occurs when the *Langseth* suspends all airgun activity.

If the PSVO detects a marine mammal outside the EZ, which is likely to enter the EZ, L–DEO will power down the airguns before the animal enters the EZ. Likewise, if a mammal is already within the EZ, when first detected L–DEO will power down the airguns immediately. During a power down of the airgun array, L–DEO will operate the 40-cubic inch (in^3) airgun. If a marine mammal is detected within or near the smaller EZ around that single airgun (Table 1), L–DEO will shut down the airgun (see next section).

Following a power-down, L–DEO will not resume airgun activity until the marine mammal has cleared the safety zone. L–DEO will consider the animal to have cleared the EZ if—

- A PSVO has visually observed the animal leave the EZ; or
- A PSVO has not sighted the animal within the EZ for 15 min for small odontocetes, or 30 min for mysticetes and large odontocetes, including sperm, pygmy sperm, dwarf sperm, and beaked whales; or
- The vessel has moved outside the EZ (*e.g.,* if a marine mammal is sighted close to the vessel and the ship speed is 8.5 km/h (5.3 mph), it would take the vessel approximately eight minutes to leave the vicinity of the marine mammal).

During airgun operations following a power-down (or shut-down) whose duration has exceeded the time limits specified previously, L–DEO will ramp-up the airgun array gradually (see Shut-down Procedures).

Shut-down Procedures—L–DEO will shut down the operating airgun(s) if a marine mammal is seen within or approaching the EZ for the single airgun. L–DEO will implement a shut-down:

(1) If an animal enters the EZ of the single airgun after L–DEO has initiated a power down; or

(2) If an animal is initially seen within the EZ of the single airgun when more than one airgun (typically the full airgun array) is operating.

L–DEO will not resume airgun activity until the marine mammal has cleared the EZ, or until the PSVO is confident that the animal has left the vicinity of the vessel. Criteria for judging that the animal has cleared the EZ will be as described in the preceding section.

Ramp-up Procedures—L–DEO will follow a ramp-up procedure when the airgun subarrays begin operating after a specified period without airgun operations or when a power down has exceeded that period. For the present cruise, this period will be approximately eight minutes. This period is based on the 180-dB radius for the 36-airgun array towed at a depth of nine m (29.5 ft) in relation to the minimum planned speed of the Langseth while shooting (8.5 km/h; 5.3 mph; 4.6 kts). L–DEO has used similar periods (8–10 min) during previous L–DEO surveys. L–DEO will not resume operations if a marine mammal has not cleared the EZ as described earlier.

Ramp-up will begin with the smallest airgun in the array (40-in^3). Airguns will be added in a sequence such that the source level of the array will increase in steps not exceeding six dB per five-minute period over a total duration of approximately 30 min. During ramp-up, the PSVOs will monitor the EZ, and if he/she sights a marine mammal, L–DEO will implement a power down or shut down as though the full airgun array were operational.

If the complete EZ is not visible to the PSVO for at least 30 min prior to the start of operations in either daylight or nighttime, L–DEO will not commence the ramp-up unless at least one airgun (40-in^3 or similar) has been operating during the interruption of seismic survey operations. Given these provisions, it is likely that L–DEO will not ramp up the airgun array from a complete shut-down at night or in thick fog, because the outer part of the EZ for that array will not be visible during those conditions. If one airgun has operated during a power-down period, ramp-up to full power will be permissible at night or in poor visibility, on the assumption that marine mammals will be alerted to the approaching seismic vessel by the sounds from the single airgun and could move away. L–DEO will not initiate a ramp-up of the airguns if a marine mammal is sighted within or near the applicable EZs during the day or close to the vessel at night.

NMFS carefully evaluated the applicant's proposed mitigation measures and considered a range of other measures in the context of ensuring that NMFS prescribed the means of effecting the least practicable adverse impact on the affected marine mammal species and stocks and their habitat. Our evaluation of potential measures included consideration of the following factors in relation to one another: (1) The manner in which, and the degree to which, the successful implementation of the measure is expected to minimize adverse impacts to marine mammals; (2) the proven or likely efficacy of the specific measure to minimize adverse impacts as planned; and (3) the practicability of the measure for applicant implementation.

Based on our evaluation of the applicant's proposed measures, NMFS determined that the mitigation measures provide the means of effecting the least practicable adverse impacts on marine mammals species or stocks and their habitat, paying particular attention to rookeries, mating grounds, and areas of similar significance.

Monitoring and Reporting

In order to issue an ITA for an activity, section 101(a)(5)(D) of the MMPA states that NMFS must set forth ''requirements pertaining to the monitoring and reporting of such taking.'' The MMPA implementing regulations at 50 CFR 216.104(a)(13) indicate that requests for IHAs must include the suggested means of accomplishing the necessary monitoring and reporting that will result in increased knowledge of the species and of the level of taking or impacts on populations of marine mammals that are expected to be present in the action area.

Monitoring

L–DEO will sponsor marine mammal monitoring during the present project, in order to implement the mitigation measures that require real-time monitoring, and to satisfy the monitoring requirements of the IHA. L–DEO's Monitoring Plan is described below this section. L–DEO understands that this monitoring plan will be subject to review by NMFS, and that refinements may be required. The monitoring work described here has been planned as a self-contained project independent of any other related monitoring projects that may be occurring simultaneously in the same regions. L–DEO is prepared to discuss coordination of its monitoring program with any related work that might be done by other groups insofar as this is practical and desirable.

Vessel-Based Visual Monitoring

L–DEO will position PSVOs aboard the seismic source vessel to watch for marine mammals near the vessel during daytime airgun operations and during any start-ups at night. PSVOs will also watch for marine mammals near the seismic vessel for at least 30 min prior to the start of airgun operations after an extended shut down. PSVOs will conduct observations during daytime periods when the seismic system is not operating for comparison of sighting rates and behavior with and without airgun operations and between acquisition periods.

Based on PSVO observations, the *Langseth* will power down or shut down the airguns when marine mammals are observed within or about to enter a designated EZ. The EZ is a region in which a possibility exists of adverse effects on animal hearing or other physical effects.

During seismic operations, at least four PSVOs will be based aboard the *Langseth.* L–DEO will appoint the PSVOs with NMFS' concurrence. During all daytime periods, two PSVOs will be on duty from the observation tower to monitor and PSVOs will be on duty in shifts of duration no longer than four hours. During mealtimes it is sometimes difficult to have two PSVOs on effort, but at least one PSVO will be on watch during bathroom breaks and mealtimes. Use of two simultaneous observers increases the effectiveness of detecting animals near the source vessel.

L–DEO will also instruct other crew to assist in detecting marine mammals and implementing mitigation requirements (if practical). Before the start of the seismic survey, L–DEO will give the crew additional instruction regarding how to accomplish this task.

The *Langseth* is a suitable platform for marine mammal observations. When stationed on the observation platform, the eye level will be approximately 21.5 m (70.5 ft) above sea level, and the observer will have a good view around the entire vessel. During daytime, the PSVOs will scan the area around the vessel systematically with reticle binoculars (*e.g.,* 7 × 50 Fujinon), Big-eye binoculars (25 × 150), and with the naked eye. During darkness, night vision devices (NVDs) will be available (ITT F500 Series Generation 3 binocular-image intensifier or equivalent), when required. Laser range-finding binoculars (Leica LRF 1200 laser rangefinder or equivalent) will be available to assist with distance estimation. Those are useful in training observers to estimate distances visually, but are generally not useful in measuring distances to animals directly; that is done primarily with the reticles in the binoculars.

Passive Acoustic Monitoring

Passive Acoustic Monitoring (PAM) will complement the visual monitoring program, when practicable. Visual monitoring typically is not effective during periods of poor visibility or at night, and even with good visibility, is unable to detect marine mammals when they are below the surface or beyond visual range.

Besides the four PSVOs, an additional Protected Species Acoustic Observer (PSAO) with primary responsibility for PAM will also be aboard the vessel. L–DEO can use acoustical monitoring in addition to visual observations to improve detection, identification, and localization of cetaceans. The acoustic monitoring will serve to alert visual observers (if on duty) when vocalizing cetaceans are detected. It is only useful when marine mammals call, but it can be effective either by day or by night, and does not depend on good visibility. It will be monitored in real time so that the visual observers can be advised when cetaceans are detected. When bearings (primary and mirror-image) to calling cetacean(s) are determined, the bearings will be relayed to the visual observer to help him/her sight the calling animal(s).

The PAM system consists of hardware (*i.e.,* hydrophones) and software. The ''wet end'' of the system consists of a towed hydrophone array that is connected to the vessel by a cable. The tow cable is 250 m (820.2 ft) long, and the hydrophones are fitted in the last 10 m (32.8 ft) of cable. A depth gauge is attached to the free end of the cable, and the cable is typically towed at depths less than 20 m (65.6 ft). The array will be deployed from a winch located on the back deck. A deck cable will connect the tow cable to the electronics unit in the main computer lab where the acoustic station, signal conditioning, and processing system will be located. The acoustic signals received by the hydrophones are amplified, digitized, and then processed by the Pamguard software. The system can detect marine mammal vocalizations at frequencies up to 250 kHz.

The PSAO will monitor the towed hydrophones 24 h per day during airgun operations and during most periods when the *Langseth* is underway while the airguns are not operating. However, PAM may not be possible if damage occurs to both the primary and back-up hydrophone arrays during operations. The primary PAM streamer on the *Langseth* is a digital hydrophone streamer. Should the digital streamer fail, back-up systems should include an analog spare streamer and a hull-mounted hydrophone. Every effort would be made to have a working PAM system during the cruise. In the unlikely event that all three of these systems were to fail, L–DEO would continue science acquisition with the visual-based observer program. The PAM system is a supplementary enhancement to the visual monitoring program. If weather conditions were to prevent the use of PAM, then conditions would also likely prevent the use of the airgun array.

The PSAO will monitor the acoustic detection system at any one time, by listening to the signals from two channels via headphones and/or speakers and watching the real-time spectrographic display for frequency ranges produced by cetaceans. PSAOs monitoring the acoustical data will be on shift for one to six hours at a time. Besides the PSAO, all PSVOs are expected to rotate through the PAM

position, although the most experienced with acoustics will be on PAM duty more frequently.

When a vocalization is detected while visual observations are in progress, the PSAO on duty will contact the visual PSVO immediately, to alert him/her to the presence of cetaceans (if they have not already been seen), and to allow a power down or shut down to be initiated, if required. The information regarding the call will be entered into a database. Data entry will include an acoustic encounter identification number, whether it was linked with a visual sighting, date, time when first and last heard and whenever any additional information was recorded, position and water depth when first detected, bearing if determinable, species or species group (*e.g.,* unidentified dolphin, sperm whale), types and nature of sounds heard (*e.g.,* clicks, continuous, sporadic, whistles, creaks, burst pulses, strength of signal, *etc.*), and any other notable information. The acoustic detection can also be recorded for further analysis.

PSVO Data and Documentation

PSVOs will record data to estimate the numbers of marine mammals exposed to various received sound levels and to document apparent disturbance reactions or lack thereof. Data will be used to estimate numbers of animals potentially 'taken' by harassment (as defined in the MMPA). They will also provide information needed to order a power down or shut down of the airguns when a marine mammal is within or near the EZ.

When a sighting is made, the following information about the sighting will be recorded:

1. Species, group size, age/size/sex categories (if determinable), behavior when first sighted and after initial sighting, heading (if consistent), bearing and distance from seismic vessel, sighting cue, apparent reaction to the airguns or vessel (*e.g.,* none, avoidance, approach, paralleling, *etc.*), and behavioral pace.

2. Time, location, heading, speed, activity of the vessel, sea state, visibility, and sun glare.

The data listed under (2) will also be recorded at the start and end of each observation watch, and during a watch whenever there is a change in one or more of the variables.

All observations and power downs or shut downs will be recorded in a standardized format. Data will be entered into an electronic database. The accuracy of the data entry will be verified by computerized data validity checks as the data are entered and by subsequent manual checking of the database. These procedures will allow initial summaries of data to be prepared during and shortly after the field program, and will facilitate transfer of the data to statistical, graphical, and other programs for further processing and archiving.

Results from the vessel-based observations will provide:

1. The basis for real-time mitigation (airgun power down or shut down).

2. Information needed to estimate the number of marine mammals potentially taken by harassment, which must be reported to NMFS.

3. Data on the occurrence, distribution, and activities of marine mammals and turtles in the area where the seismic study is conducted.

4. Information to compare the distance and distribution of marine mammals and turtles relative to the source vessel at times with and without seismic activity.

5. Data on the behavior and movement patterns of marine mammals seen at times with and without seismic activity.

Reporting

L–DEO will submit a report to NMFS and NSF within 90 days after the end of the cruise. The report will describe the operations that were conducted and sightings of marine mammals and turtles near the operations. The report will provide full documentation of methods, results, and interpretation pertaining to all monitoring. The 90-day report will summarize the dates and locations of seismic operations, and all marine mammal sightings (dates, times, locations, activities, associated seismic survey activities). The report will also include estimates of the number and nature of exposures that could result in ''takes'' of marine mammals by harassment or in other ways.

In the unanticipated event that the specified activity clearly causes the take of a marine mammal in a manner prohibited by the IHA (if issued), such as an injury (Level A harassment), serious injury or mortality (*e.g.,* ship-strike, gear interaction, and/or entanglement), L–DEO shall immediately cease the specified activities and immediately report the incident to the Chief of the Permits and Conservation Division, Office of Protected Resources, NMFS, at (301) 427–8401 and/or by email to *Michael.Payne@noaa.gov* and *ITP.Cody@noaa.gov* and the Pacific Islands Regional Stranding Coordinator at (808) 944–2269 (*David.Schofield@noaa.gov*). The report must include the following information:

- Time, date, and location (latitude/longitude) of the incident;
- Name and type of vessel involved;
- Vessel's speed during and leading up to the incident;
- Description of the incident;
- Status of all sound source use in the 24 hours preceding the incident;
- Water depth;
- Environmental conditions (*e.g.,* wind speed and direction, Beaufort sea state, cloud cover, and visibility);
- Description of all marine mammal observations in the 24 hours preceding the incident;
- Species identification or description of the animal(s) involved;
- Fate of the animal(s); and
- Photographs or video footage of the animal(s) (if equipment is available).

Activities will not resume until NMFS is able to review the circumstances of the prohibited take. NMFS will work with L–DEO to determine what is necessary to minimize the likelihood of further prohibited take and ensure MMPA compliance. L–DEO may not resume their activities until notified by NMFS via letter, email, or telephone.

In the event that L–DEO discovers an injured or dead marine mammal, and the lead PSVO determines that the cause of the injury or death is unknown and the death is relatively recent (*i.e.,* in less than a moderate state of decomposition as described in the next paragraph), L–DEO will immediately report the incident to the Chief of the Permits and Conservation Division, Office of Protected Resources, NMFS, at (301) 427–8401 and/or by email to *Michael.Payne@noaa.gov* and *ITP.Cody@noaa.gov* and the Pacific Islands Regional Stranding Coordinator at (808) 944–2269 (*David.Schofield@noaa.gov*). The report must include the same information identified in the paragraph above. Activities may continue while NMFS reviews the circumstances of the incident. NMFS will work with L–DEO to determine whether modifications in the activities are appropriate.

In the event that L–DEO discovers an injured or dead marine mammal, and the lead PSVO determines that the injury or death is not associated with or related to the activities authorized in the IHA (*e.g.,* previously wounded animal, carcass with moderate to advanced decomposition, or scavenger damage), L–DEO will report the incident to the Chief of the Permits and Conservation Division, Office of Protected Resources, NMFS, at (301) 427–8401 and/or by email to *Michael.Payne@noaa.gov* and *ITP.Cody@noaa.gov* and the Pacific Islands Regional Stranding Coordinator at (808) 944–2269

(*David.Schofield@noaa.gov*), within 24 hours of the discovery. L–DEO will provide photographs or video footage (if available) or other documentation of the stranded animal sighting to NMFS.

Estimated Take by Incidental Harassment

Except with respect to certain activities not pertinent here, the MMPA defines ''harassment'' as:

> any act of pursuit, torment, or annoyance which (i) has the potential to injure a marine mammal or marine mammal stock in the wild [Level A harassment]; or (ii) has the potential to disturb a marine mammal or marine mammal stock in the wild by causing disruption of behavioral patterns, including, but not limited to, migration, breathing, nursing, breeding, feeding, or sheltering [Level B harassment].

Only take by Level B harassment is authorized as a result of the marine geophysical survey in the central Pacific Ocean. Acoustic stimuli (*i.e.,* increased underwater sound) generated during the operation of the seismic airgun array may have the potential to cause marine mammals in the survey area to be exposed to sounds at or greater than 160 dB or cause temporary, short-term changes in behavior. There is no evidence that the planned activities could result in injury, serious injury or mortality within the specified geographic area for which L–DEO seeks the IHA. Take by injury, serious injury, or mortality is thus neither anticipated nor authorized. NMFS has determined that the required mitigation and monitoring measures will minimize any potential risk for injury or mortality.

NMFS included an in-depth discussion of the methods used to calculate the densities of the marine mammals in the area of the seismic survey in a previous notice for the proposed IHA (76 FR 57959, September 19, 2011). A summary is included here.

L–DEO's estimates are based on a consideration of the number of marine mammals that could be disturbed appreciably by operations with the 36-airgun array to be used during approximately 2,120 km (1,317.3 mi) of survey lines in the central Pacific Ocean. Density data on the marine mammal species in the survey area were available from two sources: (1) The NMFS Southwest Fishery Science Center (SWFSC) habitat model (Barlow *et al.,* 2009b); and (2) densities from the offshore stratum of the surveys of Hawaiian waters conducted in August–November 2002 (Barlow, 2006). L–DEO incorporated the models into a web-based Geographic Information System (GIS) developed by Duke University's Department of Defense Strategic Environmental Research and Development Program (SERDP) team in close collaboration with the SWFSC SERDP team (Read *et al.,* 2009). For the cetacean species in the model, L–DEO used the GIS to obtain mean densities in the survey area, (*i.e.,* in a rectangle bounded by 150 and 156 °W and 5 and 10 °N).

L–DEO's estimates of exposures to various sound levels assume that the survey would be completed. As is typical during offshore ship surveys, inclement weather and equipment malfunctions are likely to cause delays and may limit the number of useful line-kilometers of seismic operations that can be undertaken. L–DEO has included an additional 25 percent of line transects to account for mission uncertainty; accommodate turns and lines that may need to be repeated; and to follow a precautionary approach. Furthermore, any marine mammal sightings within or near the designated exclusion zones will result in the power down or shut down of seismic operations as a mitigation measure. Thus, the following estimates of the numbers of marine mammals potentially exposed to sound levels of 160 dB re: 1 μPa are precautionary and probably overestimate the actual numbers of marine mammals that might be involved. These estimates also assume that there will be no weather, equipment, or mitigation delays, which is highly unlikely.

L–DEO estimated the number of different individuals that may be exposed to airgun sounds with received levels greater than or equal to 160 dB re: 1 μPa on one or more occasions by considering the total marine area that would be within the 160-dB radius around the operating airgun array on at least one occasion and the expected density of marine mammals. The number of possible exposures (including repeated exposures of the same individuals) can be estimated by considering the total marine area that would be within the 160-dB radius around the operating airguns, including areas of overlap. In the survey, the seismic lines are parallel and in close proximity; thus individuals could be exposed on two or more occasions. The area including overlap is 1.5 times the area excluding overlap. Thus a marine mammal that stayed in the survey area during the entire survey could be exposed two times, on average. Given the pattern of the seismic lines, it is unlikely that a particular animal would stay in the area during the entire survey.

The number of different individuals potentially exposed to received levels greater than or equal to 160 re: 1 μPa was calculated by multiplying:

(1) The expected species density (in this case, the mean estimate), times;

(2) The anticipated area to be ensonified to that level during airgun operations excluding overlap, which is approximately 10,971 square kilometers (km^2) (4,235.9 square miles (mi^2)).

The area expected to be ensonified was determined by entering the planned survey lines into a MapInfo GIS, using the GIS to identify the relevant areas by ''drawing'' the applicable 160-dB buffer (see Table 1) around each seismic line, and then calculating the total area within the buffers. Areas of overlap were included only once when estimating the number of individuals exposed. Applying this approach, approximately 13,714 km^2 (5,295 mi^2) would be within the 160-dB isopleth on one or more occasions during the survey. Because this approach does not allow for turnover in the mammal populations in the study area during the course of the survey, the actual number of individuals exposed could be underestimated. However, the approach assumes that no cetaceans will move away from or toward the trackline as the *Langseth* approaches in response to increasing sound levels prior to the time the levels reach 160 dB, which will result in overestimates for those species known to avoid seismic vessels.

The total estimate of the number of individual cetaceans that could be exposed to seismic sounds with received levels greater than or equal to 160 dB re: 1 μPa during the survey is 5,124 (see Table 2). That total includes: eight Bryde's whales or 0.6 percent of the regional population; two blue whales (endangered under the ESA) or less than 0.01 percent of the regional population); and 41 sperm whales (also listed as endangered) or 2.97 percent of the regional population could be exposed during the survey. In addition, 110 beaked whales (91 Cuvier's, six Longman's, 14 Longman's beaked whales, and five *Mesoplodon* spp.) could be exposed during the survey. Most (94.8 percent) of the cetaceans that could be potentially exposed are delphinids (*e.g.,* spinner, pantropical spotted, and striped dolphins are estimated to be the most common species in the area) with maximum estimates ranging from five to 2,516 species exposed to levels greater than or equal to 160 dB re:1 μPa.

TABLE 2—ESTIMATES OF THE POSSIBLE NUMBERS OF MARINE MAMMALS EXPOSED TO DIFFERENT SOUND LEVELS DURING L–DEO'S SEISMIC SURVEY IN THE CENTRAL PACIFIC OCEAN DURING NOVEMBER, 2011 THROUGH JANUARY, 2012

Species	Estimated number of individuals exposed to sound levels ≥160 dB re: 1 μPa [1]	Approximate percent of regional population [2]	Authorized take authorization
Bryde's whale	8	0.06	8
Blue whale	0	<0.01	[4] 2
Sperm whale	41	0.17	41
Dwarf sperm whale	105	0.94	105
Cuvier's beaked whale	91	0.46	91
Longman's beaked whale	6	2.07	[4] 14
Mesoplodon spp. [3]	5	0.02	5
Rough-toothed dolphin	17	0.02	17
Bottlenose dolphin	68	0.02	68
Pantropical spotted dolphin	1,651	0.13	1,651
Spinner dolphin	2,516	0.14	2,516
Striped dolphin	226	0.02	226
Fraser's dolphin	61	0.02	[4] 182
Risso's dolphin	11	0.01	[4] 14
Melon-headed whale	18	0.04	[4] 101
False killer whale	1	< 0.01	[4] 9
Killer whale	2	0.02	[4] 5
Short-finned pilot whale	69	0.01	69

[1] Estimates are based on densities from Table 3 and an ensonified area (including 25 percent contingency) of 13,714 km^2.
[2] Regional population size estimates are from Table 3 in L–DEO's application.
[3] Includes unidentified, ginkgo-toothed or Blainville's beaked whales.
[4] Requested take authorization increased to mean group size.

Encouraging and Coordinating Research

L–DEO and NSF will coordinate the planned marine mammal monitoring program associated with the seismic survey in the central Pacific Ocean with other parties that may have interest in the area and/or be conducting marine mammal studies in the same region during the seismic survey.

Negligible Impact and Small Numbers Analysis and Determination

NMFS has defined ''negligible impact'' in 50 CFR 216.103 as ''* * * an impact resulting from the specified activity that cannot be reasonably expected to, and is not reasonably likely to, adversely affect the species or stock through effects on annual rates of recruitment or survival.'' In making a negligible impact determination, NMFS considers:

(1) The number of anticipated mortalities;

(2) The number and nature of anticipated injuries;

(3) The number, nature, and intensity, and duration of Level B harassment; and

(4) The context in which the takes occur.

As mentioned previously, NMFS estimates that 20 species of marine mammals could be potentially affected by Level B harassment over the course of the IHA. NMFS anticipates impacts to marine mammals to be in the form of Level B behavioral harassment only, due to the brief duration and sporadic nature of the survey. Certain species may have a behavioral reaction (*e.g.,* increased swim speed, avoidance of the area, *etc.*) to the sound emitted during the marine seismic survey. Behavioral modifications, including temporarily vacating the area during the operation of the airgun(s), may be made by these species to avoid the resultant acoustic disturbance. However, alternate areas are available to these species.

The survey would not occur in any areas designated as critical habitat for ESA-listed species; will not adversely impact marine mammal habitat; and would not occur in known feeding grounds, breeding grounds, or nursing areas for these species.

For reasons stated previously in this document and in the proposed notice of an IHA (76 FR 57959, September 19, 2011), the specified activities associated with the survey are not likely to cause temporary threshold shift, permanent threshold shift, or other non-auditory injury, serious injury, or death to affected marine mammals because:

(1) The likelihood that, given sufficient notice through relatively slow ship speed, marine mammals are expected to move away from a noise source that is annoying prior to its becoming potentially injurious;

(2) The potential for temporary or permanent hearing impairment is very low and would likely be avoided through the implementation of the monitoring and mitigation measures;

(3) The fact that cetaceans would have to be closer than 940 m (3,084 ft) in deep water when the 36-airgun array is in use at a 9 m (29.5 ft) tow depth from the vessel to be exposed to levels of sound believed to have even a minimal chance of causing permanent threshold shift;

(4) The fact that marine mammals would have to be closer than 3,850 m (2.4 mi) in deep water when the full array is in use at a 9 m (29.5 ft) tow depth from the vessel to be exposed to levels of sound (160 dB) believed to have even a minimal chance at causing hearing impairment; and

(5) The likelihood that marine mammal detection ability by trained observers is high at that short distance from the vessel.

Table 2 in this document outlines the number of Level B harassment takes that are anticipated as a result of the activities. Of the marine mammal species likely to occur in the survey area, six are listed as endangered under the ESA: the humpback, sei, fin, blue, and sperm whale and the Hawaiian monk seal. These species are also considered depleted under the MMPA. However, no take of endangered humpback, sei, or fin whales was

requested because of the low likelihood of encountering these species during the cruise. As mentioned previously, the survey would not occur in any areas designated as critical habitat for ESA-listed species and would not adversely impact marine mammal habitat.

For the 20 species for which take was requested, the requested take numbers are small (each, less than two and one-half percent) relative to the population size. The population estimates for the species that may potentially be taken as a result of L–DEO's seismic survey were presented earlier in this document. For reasons described earlier in this document, the maximum calculated number of individual marine mammals for each species that could potentially be taken by harassment is small relative to the overall population sizes (0.06 percent for Bryde's whales, less than 0.01 percent for the endangered blue whale, 0.17 percent for the endangered sperm whale, and less than 2.5 percent of the other 15 mammal populations or stocks).

Based on the analysis contained herein of the likely effects of the specified activity on marine mammals and their habitat, and taking into consideration the implementation of the mitigation and monitoring measures, NMFS finds that L–DEO's planned research activities (and the resultant total taking from the marine geophysical survey): (1) Will result in the incidental take of small numbers of marine mammals, by Level B harassment only; (2) will have a negligible impact on the affected species or stocks; and (3) will have mitigated impacts to affected species or stocks of marine mammals to the lowest level practicable.

Impact on Availability of Affected Species or Stock for Taking for Subsistence Uses

There are no relevant subsistence uses of marine mammals implicated by this action.

Endangered Species Act

Of the species of marine mammals that may occur in the survey area, six are listed as endangered under the ESA, including the humpback, sei, fin, blue, and sperm whales and the Hawaiian monk seal. However, L–DEO only requested Level B incidental harassment of two listed species: the humpback and sperm whales. L–DEO did not request take of endangered humpback, sei, or fin, whales because of the low likelihood of encountering these species during the cruise. Under section 7 of the ESA, NSF had initiated formal consultation with the NMFS, Office of Protected Resources, Endangered Species Act Interagency Cooperation Division, on this seismic survey. Because the actions of conducting the seismic survey and issuing the IHA are interrelated, NMFS' Office of Protected Resources, Permits and Conservation Division, had initiated formal consultation under section 7 of the ESA with NMFS' Office of Protected Resources, Endangered Species Act Interagency Cooperation Division, to obtain a BiOp evaluating the effects of issuing the IHA on threatened and endangered marine mammals and, if appropriate, authorizing incidental take.

November, 2011 NMFS issued a BiOp and concluded that the action and issuance of the IHA are not likely to jeopardize the continued existence of the humpback and sperm whales. The BiOp also concluded that designated critical habitat for these species does not occur in the survey area and would not be affected by the survey. L–DEO must also comply with the Relevant Terms and Conditions of the Incidental Take Statement (ITS) corresponding to NMFS' Biological Opinion issued to both NSF and NMFS' Office of Protected Resources. L–DEO must also comply with the mitigation and monitoring requirements included in the IHA in order to be exempt under the ITS in the BiOp from the prohibition on take of listed endangered marine mammal species otherwise prohibited by Section 9 of the ESA.

National Environmental Policy Act (NEPA)

To meet NMFS' NEPA requirements for the issuance of an IHA to L–DEO, NMFS has prepared an Environmental Assessment (EA) titled ''Issuance of an Incidental Harassment Authorization to the Lamont-Doherty Earth Observatory to Take Marine Mammals by Harassment Incidental to a Marine Geophysical Survey in the Central Pacific Ocean, November, 2011 through January, 2012.'' This EA incorporates the NSF's Environmental Analysis Pursuant to Executive Order 12114 (NSF, 2010) and an associated report (Report) prepared by LGL Limited Environmental Research Associates (LGL) for NSF, titled, ''Environmental Assessment of a Marine Geophysical Survey by the R/V *Marcus G. Langseth* in the Central Pacific Ocean, November–December 2011,'' by reference pursuant to 40 CFR 1502.21 and NOAA Administrative Order (NAO) 216–6 § 5.09(d). NMFS provided relevant environmental information to the public through the notice for the proposed IHA (76 FR 57959, September 19, 2011) and has considered public comments received in response prior to finalizing its EA and deciding whether or not to issue a Finding of No Significant Impact (FONSI).

NMFS has concluded that issuance of an IHA would not significantly affect the quality of the human environment and has issued a FONSI. Because the NMFS has made a FONSI, it is not necessary to prepare an environmental impact statement for the issuance of an IHA to L–DEO for this activity. The EA and FONSI for this activity are available upon request (see **ADDRESSES**).

Authorization

As a result of these determinations, NMFS has issued an IHA to L–DEO for the take of small numbers of marine mammals, by Level B harassment, incidental to conducting a marine geophysical survey in the central Pacific Ocean, November 2011 through January 2012, provided the previously mentioned mitigation, monitoring, and reporting requirements are incorporated.

Dated: November 28, 2011.

Angela Somma,

Acting Office Director, Office of Protected Resources, National Marine Fisheries Service.

[FR Doc. 2011–31056 Filed 12–1–11; 8:45 am]

BILLING CODE 3510–22–P

COMMITTEE FOR PURCHASE FROM PEOPLE WHO ARE BLIND OR SEVERELY DISABLED

Procurement List; Proposed Addition

AGENCY: Committee for Purchase From People Who Are Blind or Severely Disabled.

ACTION: Proposed Addition to the Procurement List.

SUMMARY: The Committee is proposing to add a service to the Procurement List that will be provided by a nonprofit agency employing persons who are blind or have other severe disabilities.

Comments Must Be Received on or Before: 1/2/2012.

ADDRESSES: Committee for Purchase From People Who Are Blind or Severely Disabled, Jefferson Plaza 2, Suite 10800, 1421 Jefferson Davis Highway, Arlington, Virginia 22202–3259.

FOR FURTHER INFORMATION OR TO SUBMIT COMMENTS CONTACT: Patricia Briscoe, *Telephone:* (703) 603–7740, *Fax:* (703) 603–0655, or email *CMTEFedReg@AbilityOne.gov*.

SUPPLEMENTARY INFORMATION: This notice is published pursuant to 41 U.S.C 47(a)(2) and 41 CFR 51–2.3. Its purpose is to provide interested persons an opportunity to submit comments on the proposed actions.

Addition

If the Committee approves the proposed addition, the entities of the Federal Government identified in this notice will be required to furnish the service listed below from the nonprofit agency employing persons who are blind or have other severe disabilities.

Regulatory Flexibility Act Certification

I certify that the following action will not have a significant impact on a substantial number of small entities. The major factors considered for this certification were:

1. If approved, the action will not result in any additional reporting, recordkeeping or other compliance requirements for small entities other than the small organization that will provide the service to the Government.

2. If approved, the action will result in authorizing small entities to provide the service to the Government.

3. There are no known regulatory alternatives which would accomplish the objectives of the Javits-Wagner-O'Day Act (41 U.S.C. 46–48c) in connection with the service proposed for addition to the Procurement List.

Comments on this certification are invited. Commenters should identify the statement(s) underlying the certification on which they are providing additional information.

End of Certification

The following service is proposed for addition to the Procurement List for production by the nonprofit agency listed:

Service

Service Type/Location: Grounds Maintenance, Beale AFB, CA.
NPA: Crossroads Diversified Service, Inc., Sacramento, CA.
Contracting Activity: 9th Contracting Squadron, Beale AFB, CA.

Patricia Briscoe,

Deputy Director, Business Operations, Pricing and Information Management.

[FR Doc. 2011–30988 Filed 12–1–11; 8:45 am]

BILLING CODE 6353–01–P

CONSUMER PRODUCT SAFETY COMMISSION

Notice of Teleconference of the Chronic Hazard Advisory Panel on Phthalates and Phthalate Substitutes

AGENCY: Consumer Product Safety Commission.

ACTION: Notice of meeting.

SUMMARY: The Consumer Product Safety Commission (''CPSC'' or ''Commission'') is announcing a teleconference of the Chronic Hazard Advisory Panel (CHAP) on phthalates and phthalate substitutes. The Commission appointed this CHAP on April 14, 2010, to study the effects on children's health of all phthalates and phthalate alternatives, as used in children's toys and child care articles, pursuant to section 108 of the Consumer Product Safety Improvement Act of 2008 (CPSIA) (Pub. L. 110–314). The CHAP will discuss its progress toward completing its analysis of potential risks from phthalates and phthalate substitutes.

DATES: The teleconference will take place from 11:30 a.m. to 1 p.m. EST (15:30 to 17:00 GMT) on Monday, December 19, 2011. Interested members of the public may listen to the CHAP's discussion. Members of the public will not have the opportunity to ask questions, comment, or otherwise participate in the teleconference. Interested parties should contact the CPSC project manager, Michael Babich, by email (*mbabich@cpsc.gov*) for call-in instructions no later than Wednesday, December 14, 2011.

FOR FURTHER INFORMATION CONTACT: To request access to the teleconference, contact the project manager by email at *mbabich@cpsc.gov,* no later than Wednesday, December 14, 2011. For all other questions, contact: Michael Babich, Directorate for Health Sciences, Consumer Product Safety Commission, Bethesda, MD 20814; telephone (301) 504–7253; email *mbabich@cpsc.gov.*

SUPPLEMENTARY INFORMATION: Section 108 of the CPSIA permanently prohibits the sale of any ''children's toy or child care article'' containing more than 0.1 percent of each of three specified phthalates: Di- (2-ethylhexyl) phthalate (DEHP), dibutyl phthalate (DBP), and benzyl butyl phthalate (BBP). Section 108 of the CPSIA also prohibits, on an interim basis, the sale of any ''children's toy that can be placed in a child's mouth'' or ''child care article'' containing more than 0.1 percent of each of three additional phthalates: diisononyl phthalate (DINP), diisodecyl phthalate (DIDP), and di-*n*-octyl phthalate (DnOP).

Moreover, section 108 of the CPSIA requires the Commission to convene a CHAP ''to study the effects on children's health of all phthalates and phthalate alternatives as used in children's toys and child care articles.'' The CPSIA requires the CHAP to complete an examination of the full range of phthalates that are used in products for children and:

- Examine all of the potential health effects (including endocrine-disrupting effects) of the full range of phthalates;
- Consider the potential health effects of each of these phthalates, both in isolation and in combination with other phthalates;
- Examine the likely levels of children's, pregnant women's, and others' exposure to phthalates, based upon a reasonable estimation of normal and foreseeable use and abuse of such products;
- Consider the cumulative effect of total exposure to phthalates, both from children's products and from other sources, such as personal care products;
- Review all relevant data, including the most recent, best-available, peer-reviewed, scientific studies of these phthalates and phthalate alternatives that employ objective data-collection practices or employ other objective methods;
- Consider the health effects of phthalates not only from ingestion, but also as a result of dermal, hand-to-mouth, or other exposure;
- Consider the level at which there is a reasonable certainty of no harm to children, pregnant women, or other susceptible individuals and their offspring, considering the best available science, and using sufficient safety factors to account for uncertainties regarding exposure and susceptibility of children, pregnant women, and other potentially susceptible individuals; and
- Consider possible similar health effects of phthalate alternatives used in children's toys and child care articles.

The CPSIA contemplates completion of the CHAP's examination within 18 months of the panel's appointment on April 14, 2010. The CHAP must review prior work on phthalates by the Commission, but it is not to be considered determinative because the CHAP's examination must be conducted de novo.

The CHAP must make recommendations to the Commission regarding any phthalates (or combinations of phthalates), in addition to those identified in section 108 of the CPSIA or phthalate alternatives that the panel determines should be prohibited from use in children's toys or child care articles or otherwise restricted. The CHAP members were selected by the Commission from scientists nominated by the National Academy of Sciences. *See* 15 U.S.C. 2077, 2030(b).

The CHAP met previously in April, July, and December 2010, and in March, July, and November 2011, at the CPSC's offices in Bethesda, MD, and by teleconference in November 2010 and September 2011. The CHAP heard

testimony from interested parties at the July 2010 and the November 2011 meetings. The December 2011 conference call will include discussion of the CHAP's progress in preparing a final report. There will not be any opportunity for public comment during the conference call.

Dated: November 29, 2011.

Todd A. Stevenson,

Secretary, Consumer Product Safety Commission.

[FR Doc. 2011–31007 Filed 12–1–11; 8:45 am]

BILLING CODE 6355–01–P

CONSUMER PRODUCT SAFETY COMMISSION

Sunshine Act Meeting Notice

TIME AND DATE: Wednesday, December 7, 2011; 10 a.m.–11 a.m.

PLACE: Hearing Room 420, Bethesda Towers, 4330 East West Highway, Bethesda, Maryland.

STATUS: Closed to the Public.

MATTER TO BE CONSIDERED: *Compliance Status Report.*

The Commission staff will brief the Commission on the status of compliance matters.

For a recorded message containing the latest agenda information, call (301) 504–7948.

FOR FURTHER INFORMATION CONTACT: Todd A. Stevenson, Office of the Secretary, U.S. Consumer Product Safety Commission, 4330 East West Highway, Bethesda, MD 20814, (301) 504–7923.

Dated: November 30, 2011.

Todd A. Stevenson,

Secretary.

[FR Doc. 2011–31078 Filed 11–30–11; 11:15 am]

BILLING CODE 6355–01–P

DEPARTMENT OF DEFENSE

Office of the Secretary

Notice of Closed Meetings of the Department of Defense Wage Committee

AGENCY: Department of Defense (DoD).

ACTION: Notice of closed meetings.

SUMMARY: Pursuant to the provisions of section 10 of Public Law 92–463, the Federal Advisory Committee Act, notice is hereby given that closed meeting of the Department of Defense Wage Committee will be held:

DATES: Tuesday, January 24, 2012, at 10 a.m.

ADDRESSES: 1400 Key Boulevard, Level A, Room A101, Rosslyn, Virginia 22209.

FOR FURTHER INFORMATION CONTACT: Additional information concerning the meetings may be obtained by writing to the Chairman, Department of Defense Wage Committee, 4000 Defense Pentagon, Washington, DC 20301–4000.

SUPPLEMENTARY INFORMATION: Under the provisions of section 10(d) of Public Law 92–463, the Department of Defense has determined that the meetings meet the criteria to close meetings to the public because the matters to be considered are related to internal rules and practices of the Department of Defense and the detailed wage data to be considered were obtained from officials of private establishments with a guarantee that the data will be held in confidence.

However, members of the public who may wish to do so are invited to submit material in writing to the chairman concerning matters believed to be deserving of the Committee's attention.

Dated: November 29, 2011.

Morgan F. Park,

Alternate OSD Federal Register Liaison Officer, Department of Defense.

[FR Doc. 2011–30985 Filed 12–1–11; 8:45 am]

BILLING CODE 5001–06–P

DEPARTMENT OF DEFENSE

Office of the Secretary

Notice of Closed Meetings of the Department of Defense Wage Committee

AGENCY: Department of Defense (DoD).

ACTION: Notice of closed meetings.

SUMMARY: Pursuant to the provisions of section 10 of Public Law 92–463, the Federal Advisory Committee Act, notice is hereby given that closed meeting of the Department of Defense Wage Committee will be held.

DATES: Tuesday, February 21, 2012, at 10 a.m.

ADDRESSES: 1400 Key Boulevard, Level A, Room A101, Rosslyn, Virginia 22209.

FOR FURTHER INFORMATION CONTACT: Additional information concerning the meetings may be obtained by writing to the Chairman, Department of Defense Wage Committee, 4000 Defense Pentagon, Washington, DC 20301–4000.

SUPPLEMENTARY INFORMATION: Under the provisions of section 10(d) of Public Law 92–463, the Department of Defense has determined that the meetings meet the criteria to close meetings to the public because the matters to be considered are related to internal rules and practices of the Department of Defense and the detailed wage data to be considered were obtained from officials of private establishments with a guarantee that the data will be held in confidence.

However, members of the public who may wish to do so are invited to submit material in writing to the chairman concerning matters believed to be deserving of the Committee's attention.

Dated: November 29, 2011.

Morgan F. Park,

Alternate OSD Federal Register Liaison Officer.

[FR Doc. 2011–30987 Filed 12–1–11; 8:45 am]

BILLING CODE 5001–06–P

DEPARTMENT OF DEFENSE

Office of the Secretary

Notice of Closed Meetings of the Department of Defense Wage Committee

AGENCY: Department of Defense (DoD).

ACTION: Notice of closed meetings.

SUMMARY: Pursuant to the provisions of section 10 of Public Law 92–463, the Federal Advisory Committee Act, notice is hereby given that closed meeting of the Department of Defense Wage Committee will be held.

DATES: Tuesday, February 7, 2012, at 10 a.m.

ADDRESSES: 1400 Key Boulevard, Level A, Room A101, Rosslyn, Virginia 22209.

FOR FURTHER INFORMATION CONTACT: Additional information concerning the meetings may be obtained by writing to the Chairman, Department of Defense Wage Committee, 4000 Defense Pentagon, Washington, DC 20301–4000.

SUPPLEMENTARY INFORMATION: Under the provisions of section 10(d) of Public Law 92–463, the Department of Defense has determined that the meetings meet the criteria to close meetings to the public because the matters to be considered are related to internal rules and practices of the Department of Defense and the detailed wage data to be considered were obtained from officials of private establishments with a guarantee that the data will be held in confidence.

However, members of the public who may wish to do so are invited to submit material in writing to the chairman concerning matters believed to be deserving of the Committee's attention.

Dated: November 29, 2011.

Morgan F. Park,

Alternate OSD Federal Register Liaison Officer.

[FR Doc. 2011–30986 Filed 12–1–11; 8:45 am]

BILLING CODE 5001–06–P

DEPARTMENT OF DEFENSE

Department of the Army, Corps of Engineers

Intent To Prepare an Environmental Impact Statement for the Central Everglades Planning Project, Okeechobee, Glades, Martin, Palm Beach, Broward, Miami-Dade and Monroe Counties, FL

AGENCY: Department of the Army, U.S. Army Corps of Engineers, DOD.

ACTION: Notice of intent.

SUMMARY: The Everglades ecosystem encompasses a system of diverse wetland landscapes that are hydrologically and ecologically connected across more than 200 miles from north to south and across 18,000 square miles of southern Florida. In 2000, the U.S. Congress authorized the Federal government, in partnership with the State of Florida, to embark upon a multi-decade, multi-billion dollar Comprehensive Everglades Restoration Plan (CERP) to further protect and restore the remaining Everglades ecosystem while providing for other water-related needs of the region. CERP involves modification of the existing network of drainage canals and levees that make up the Central and Southern Florida Flood Control Project.

Since 2000, much progress has been made. Construction has begun on the first generation of CERP project modifications already authorized by Congress. These include the Picayune Strand Restoration, the Indian River Lagoon South and Site 1 Impoundment projects. Project Implementation Reports have been completed, or are nearing completion, for the second generation of CERP projects for Congressional authorization, including Biscayne Bay Coastal Wetlands—Phase 1, the Broward County Water Preserve Areas, the Caloosahatchee River (C–43) West Basin Storage Reservoir, and the C–111 Spreader Canal Western Project. All of these CERP projects utilize lands that were acquired by the State and Federal government to meet CERP goals of increasing the extent of wetlands, reducing damaging freshwater discharges to the coastal estuaries, and reducing seepage losses from the natural system. These projects contribute significant ecological benefits to the system and the specific regional habitats in which they are located. These initial CERP projects were intended to provide initial and immediate ecological benefits and set the conditions along the margins of the system that help ensure increased water flows to the interior of the system will not cause adverse effects.

The next step for implementation of CERP is to redirect water that is currently discharged to the east and west coast estuaries from Lake Okeechobee and restore water flow to the south, allowing for restoration of natural habitat conditions and water flow in the central Everglades and re-connecting the ecosystem from Lake Okeechobee to Everglades National Park and Florida Bay. The Central Everglades Planning Project will develop the initial increment of project features that provide for storage, treatment and conveyance south of Lake Okeechobee, removal of canals and levees within Water Conservation Area 3 and seepage management features to retain water within the natural system. The CERP projects identified to accomplish this include the Everglades Agricultural Storage Reservoirs, Water Conservation Area 3 Decompartmentalization and Sheetflow Enhancement, Everglades National Park (ENP) Seepage Management, and Everglades Rain-Driven Operations. These projects make up the heart of CERP aimed at restoring more natural quantity, quality, timing and distribution of water flows to the remaining portions of the river of grass. An integrated study effort on these projects is needed to set the direction for the next decade of CERP implementation.

ADDRESSES: U.S. Army Corps of Engineers, Planning Division, Environmental Branch, P.O. Box 4970, Jacksonville, FL 32232–0019.

FOR FURTHER INFORMATION CONTACT: Dr. Gina Ralph at (904) 232–2336 or email at *Gina.P.Ralph@usace.army.mil.*

SUPPLEMENTARY INFORMATION:

a. The goal of the Central Everglades Planning Project effort would be to develop an integrated, comprehensive technical plan, including the first increment of projects, for delivering the right quantity, quality, timing and distribution of water needed to restore and reconnect the central Everglades ecosystem.

b. A scoping letter will be used to invite comments from Federal, State, and local agencies, affected Indian Tribes, and other interested private organizations and individuals.

c. A scoping meeting will be held December 14, 2011 from 6:30 to 9 p.m. at the Sheraton Suites Plantation, Plantation I/II Room, 311 North University Drive, Plantation, Florida and December 15, 2011 from 6:30 to 9 p.m. at the John Boy Auditorium, 1200 South W.C. Owen Avenue, Clewiston, FL. Assistance for individuals with special needs or language translation will be available as needed by calling (904) 232–1613.

d. All alternative plans will be reviewed under provisions of appropriate laws and regulations, including the Endangered Species Act, Fish and Wildlife Coordination Act, Clean Water Act, and Farmland Protection Policy Act.

e. The Draft Environmental Impact Assessment is expected to be available for public review in the 1st quarter of 2013.

Brenda S. Bowen,

Army Federal Register Liaison Officer.

[FR Doc. 2011–31010 Filed 12–1–11; 8:45 am]

BILLING CODE 3720–58–P

DEPARTMENT OF ENERGY

Federal Energy Regulatory Commission

Combined Notice of Filings #1

Take notice that the Commission received the following electric corporate filings:

Docket Numbers: EC12–38–000.

Applicants: TPW Petersburg, LLC, Gestamp Eolica S.L.

Description: Application of TPW Petersburg, LLC and Gestamp Eolica S.L. for Authorization Pursuant to Section 203 of the Federal Power Act and Request for Confidential Treatment, Expedited Consideration and Waivers.

Filed Date: 11/21/11.

Accession Number: 20111121–5279.

Comments Due: 5 p.m. ET 12/12/11.

Take notice that the Commission received the following electric rate filings:

Docket Numbers: ER11–4674–001.

Applicants: Midwest Independent Transmission System Operator, Inc.

Description: Vectren-IMPA FCA Amendment to be effective 9/29/2011.

Filed Date: 11/21/11.

Accession Number: 20111121–5193.

Comments Due: 5 p.m. ET 12/12/11.

Docket Numbers: ER12–351–001.

Applicants: Midwest Independent Transmission System Operator, Inc.

Description: 11–21–11 MRES Attachment O, GG, and MM Amendment to be effective 1/1/2012.

Filed Date: 11/21/11.

Accession Number: 20111121–5234.

Comments Due: 5 p.m. ET 12/12/11.

Docket Numbers: ER12–447–000.

Applicants: Connecticut Central Energy, LLC.

Description: Connecticut Central Energy, LLC request to cancel its market-based rate tariff.

Filed Date: 11/21/11.

Accession Number: 20111121–5045.

Comments Due: 5 p.m. ET 12/12/11.

Docket Numbers: ER12–448–000.

Applicants: PJM Interconnection, L.L.C.

Description: Original Service Agreement No. 3145; Queue No. V4–006, V4–007, V4–030, V4–031 to be effective 10/20/2011.

Filed Date: 11/21/11.

Accession Number: 20111121–5079.

Comments Due: 5 p.m. ET 12/12/11.

Docket Numbers: ER12–449–000.

Applicants: PJM Interconnection, L.L.C.

Description: Original Service Agreement No. 3128; Queue No. W3–139 to be effective 10/24/2011.

Filed Date: 11/21/11.

Accession Number: 20111121–5096.

Comments Due: 5 p.m. ET 12/12/11.

Docket Numbers: ER12–450–000.

Applicants: Midwest Independent Transmission System Operator, Inc.

Description: 11–21–11 MVP Compliance to be effective 7/28/2010.

Filed Date: 11/21/11.

Accession Number: 20111121–5099.

Comments Due: 5 p.m. ET 12/12/11.

Docket Numbers: ER12–451–000.

Applicants: Midwest Independent Transmission System Operator, Inc.

Description: 11–21–11 Att FF & X_Option 1 Removal to be effective 3/22/2011.

Filed Date: 11/21/11.

Accession Number: 20111121–5107.

Comments Due: 5 p.m. ET 12/12/11.

Docket Numbers: ER12–452–000.

Applicants: Calpine Energy Services, L.P.

Description: Revision to Tariff for the Sale, Assignment, or Transfer of BPA Trans. Rights to be effective 11/22/2011.

Filed Date: 11/21/11.

Accession Number: 20111121–5163.

Comments Due: 5 p.m. ET 12/12/11.

Docket Numbers: ER12–453–000.

Applicants: Hermiston Power, LLC.

Description: Revision to Tariff for the Sale, Assignment, or Transfer of BPA Trans. Rights to be effective 11/22/2011.

Filed Date: 11/21/11.

Accession Number: 20111121–5164.

Comments Due: 5 p.m. ET 12/12/11.

Docket Numbers: ER12–454–000.

Applicants: ReEnergy Sterling CT Limited Partnership.

Description: ReEnergy Sterling Change in Seller Category Tariff Filing to be effective 11/21/2011.

Filed Date: 11/21/11.

Accession Number: 20111121–5211.

Comments Due: 5 p.m. ET 12/12/11.

Docket Numbers: ER12–455–000.

Applicants: Southwest Power Pool, Inc.

Description: Revisions to Grandfathering of Service and Rate Provisions Between SPS and PSCo to be effective 1/17/2012.

Filed Date: 11/21/11.

Accession Number: 20111121–5216.

Comments Due: 5 p.m. ET 12/12/11.

Docket Numbers: ER12–456–000.

Applicants: Lyonsdale Biomass LLC.

Description: Lyonsdale Biomass Change in Seller Category Tariff Filing to be effective 11/21/2011.

Filed Date: 11/21/11.

Accession Number: 20111121–5233.

Comments Due: 5 p.m. ET 12/12/11.

Docket Numbers: ER12–457–000.

Applicants: Southwest Power Pool, Inc.

Description: Compliance Filing in Order ER11–3627—Revisions to Attachment AE Section 4.4 to be effective 7/24/2011.

Filed Date: 11/21/11.

Accession Number: 20111121–5249.

Comments Due: 5 p.m. ET 12/12/11.

Docket Numbers: ER12–458–000.

Applicants: Quantum Choctaw Power, LLC.

Description: Quantum Choctaw Power, LLC to be effective 11/21/2011.

Filed Date: 11/21/11.

Accession Number: 20111121–5254.

Comments Due: 5 p.m. ET 12/12/11.

Docket Numbers: ER12–459–000.

Applicants: Sunoco Power Generation LLC.

Description: Eagle Point Rate Schedule to be effective 11/21/2011.

Filed Date: 11/21/11.

Accession Number: 20111121–5258.

Comments Due: 5 p.m. ET 12/12/11.

The filings are accessible in the Commission's eLibrary system by clicking on the links or querying the docket number.

Any person desiring to intervene or protest in any of the above proceedings must file in accordance with Rules 211 and 214 of the Commission's Regulations (18 CFR 385.211 and 385.214) on or before 5 p.m. Eastern time on the specified comment date. Protests may be considered, but intervention is necessary to become a party to the proceeding.

eFiling is encouraged. More detailed information relating to filing requirements, interventions, protests, service, and qualifying facilities filings can be found at: *http://www.ferc.gov/docs-filing/efiling/filing-req.pdf.* For other information, call (866) 208–3676 (toll free). For TTY, call (202) 502–8659.

Dated: November 22, 2011.

Nathaniel J. Davis, Sr.,

Deputy Secretary.

[FR Doc. 2011–31026 Filed 12–1–11; 8:45 am]

BILLING CODE 6717–01–P

DEPARTMENT OF ENERGY

Federal Energy Regulatory Commission

Combined Notice of Filings #2

Take notice that the Commission received the following electric corporate filings:

Docket Numbers: EC12–39–000.

Applicants: Choctaw Gas Generation, LLC, Quantum Choctaw Power, LLC.

Description: Application For Authorization Under Section 203 Of The Federal Power Act And Request For Confidential Treatment And Waivers And For Expedited Action of Choctaw Gas Generation, LLC and Quantum Choctaw Power, LLC.

Filed Date: 11/22/11.

Accession Number: 20111122–5043.

Comments Due: 5 p.m. ET 12/13/11.

Take notice that the Commission received the following electric rate filings:

Docket Numbers: ER12–186–001.

Applicants: PNE Energy Supply, LLC.

Description: Amended Tariff Filing to be effective 1/30/2012.

Filed Date: 11/22/11.

Accession Number: 20111122–5052.

Comments Due: 5 p.m. ET 12/13/11.

Docket Numbers: ER12–460–000.

Applicants: CPV Liberty, LLC.

Description: Notice of Cancellation of Market-Based Rate Tariff to be effective 11/24/2011.

Filed Date: 11/22/11.

Accession Number: 20111122–5050.

Comments Due: 5 p.m. ET 12/13/11.

Docket Numbers: ER12–461–000.

Applicants: Southwestern Electric Power Company.

Description: 20111122 NTEC Amended PSA to be effective 12/17/2010.

Filed Date: 11/22/11.

Accession Number: 20111122–5066.

Comments Due: 5 p.m. ET 12/13/11.

Docket Numbers: ER12–462–000.

Applicants: California Independent System Operator Corporation.

Description: California Independent System Operator Corporation submits tariff filing per 35.13(a)(2)(iii: 2011–11–22 CAISO SCA with Bonneville Power Administration to be effective 11/25/2011.

Filed Date: 11/22/11.
Accession Number: 20111122–5102.
Comments Due: 5 p.m. ET 12/13/11.

The filings are accessible in the Commission's eLibrary system by clicking on the links or querying the docket number.

Any person desiring to intervene or protest in any of the above proceedings must file in accordance with Rules 211 and 214 of the Commission's Regulations (18 CFR 385.211 and 385.214) on or before 5 p.m. Eastern time on the specified comment date. Protests may be considered, but intervention is necessary to become a party to the proceeding.

eFiling is encouraged. More detailed information relating to filing requirements, interventions, protests, service, and qualifying facilities filings can be found at: *http://www.ferc.gov/docs-filing/efiling/filing-req.pdf.* For other information, call (866) 208–3676 (toll free). For TTY, call (202) 502–8659.

Dated: November 22, 2011.

Nathaniel J. Davis, Sr.,

Deputy Secretary.

[FR Doc. 2011–31027 Filed 12–1–11; 8:45 am]

BILLING CODE 6717–01–P

DEPARTMENT OF ENERGY

Federal Energy Regulatory Commission

Combined Notice of Filings #1

Take notice that the Commission received the following electric corporate filings:

Docket Numbers: EC12–25–000.
Applicants: Avenal Park LLC, Sand Drag LLC, Sun City Project LLC, Eurus Combine Hills II LLC.
Description: Eurus Combine Hills II LLC, *et al.* Second Supplement to Application for Authorization of Transaction Pursuant to Section 203 of the Federal Power Act and Request for Expedited Consideration.
Filed Date: 11/23/11.
Accession Number: 20111123–5145.
Comments Due: 5 p.m. ET 12/5/11.

Docket Numbers: EC12–41–000.
Applicants: Sandy Ridge Wind, LLC, Pocahontas Prairie Wind, LLC
Description: Application for Authorization for Disposition of Jurisdictional Facilities and Request for Expedited Action of Sandy Ridge Wind, LLC, *et al.*
Filed Date: 11/23/11.
Accession Number: 20111123–5080.
Comments Due: 5 p.m. ET 12/14/11.

Docket Numbers: EC12–42–000.
Applicants: Mountain Wind Power, LLC, Mountain Wind Power II, LLC
Description: Application for Authorization for Disposition of Jurisdictional Facilities and Request for Expedited Action of Mountain Wind Power, LLC, *et al.*
Filed Date: 11/23/11.
Accession Number: 20111123–5171.
Comments Due: 5 p.m. ET 12/14/11.

Take notice that the Commission received the following electric rate filings:

Docket Numbers: ER10–3260–002.
Applicants: Granite Ridge Energy, LLC.
Description: Supplemental Filing for Triennial Market Power Analysis of Granite Ridge Energy, LLC under ER10–3260.
Filed Date: 11/23/11.
Accession Number: 20111123–5092.
Comments Due: 5 p.m. ET 12/14/11.

Docket Numbers: ER11–3576–005; ER11–3401–006; ER10–3138–005.
Applicants: Golden Spread Electric Cooperative, Inc., GS Electric Generating Cooperative Inc, Denver City Energy Associates, L.P.
Description: Notice of Change in Status of Golden Spread Electric Cooperative, Inc. *et al.*
Filed Date: 11/23/11.
Accession Number: 20111123–5035.
Comments Due: 5 p.m. ET 12/14/11.

Docket Numbers: ER11–3859–001; ER11–3863–001; ER11–3861–001; ER11–3864–001; ER11–3866–001; ER11–3867–001; ER11–3857–001.
Applicants: Milford Power Company, LLC, MASSPOWER, Lake Road Generating Company, L.P., EquiPower Resources Management, LLC, Dighton Power, LLC, Empire Generating Co, LLC, ECP Energy I, LLC.
Description: ECP MBR Sellers Clarification Letter in ER11–3859.
Filed Date: 11/22/11.
Accession Number: 20111122–5205.
Comments Due: 5 p.m. ET 12/13/11.

Docket Numbers: ER12–171–001.
Applicants: PJM Interconnection, L.L.C.
Description: Errata to Original Service Agreement No. 3080 under Docket No. ER12–171–000 to be effective 9/22/2011.
Filed Date: 11/23/11.
Accession Number: 20111123–5138.
Comments Due: 5 p.m. ET 12/14/11.

Docket Numbers: ER12–470–000.
Applicants: PJM Interconnection, L.L.C.
Description: Amended ISA and ICSA—First Revised Service Agreement Nos. 2960 & 2972 to be effective 7/21/2011.
Filed Date: 11/23/11.
Accession Number: 20111123–5083.
Comments Due: 5 p.m. ET 12/14/11.

Docket Numbers: ER12–471–000.
Applicants: Northern States Power Company, a Wisconsin corporation
Description: 2011_11–23_DPC Const Agrmt_290–NSPW to be effective 3/31/2011.
Filed Date: 11/23/11.
Accession Number: 20111123–5141.
Comments Due: 5 p.m. ET 12/14/11.

Docket Numbers: ER12–472–000.
Applicants: Calpine Corporation.
Description: Request for Waiver of CAISO Tariff Appendix Y To Permit Full Recovery of Interconnection Financial Security of Calpine Corporation.
Filed Date: 11/23/11.
Accession Number: 20111123–5166.
Comments Due: 5 p.m. ET 12/14/11.

Docket Numbers: ER12–473–000.
Applicants: Commonwealth Edison Company.
Description: Commonwealth Edison Co. submits Notices of Cancellation.
Filed Date: 11/23/11.
Accession Number: 20111123–5169.
Comments Due: 5 p.m. ET 12/14/11.

The filings are accessible in the Commission's eLibrary system by clicking on the links or querying the docket number.

Any person desiring to intervene or protest in any of the above proceedings must file in accordance with Rules 211 and 214 of the Commission's Regulations (18 CFR 385.211 and 385.214) on or before 5 p.m. Eastern time on the specified comment date. Protests may be considered, but intervention is necessary to become a party to the proceeding.

eFiling is encouraged. More detailed information relating to filing requirements, interventions, protests, service, and qualifying facilities filings can be found at: *http://www.ferc.gov/docs-filing/efiling/filing-req.pdf.* For other information, call (866) 208–3676 (toll free). For TTY, call (202) 502–8659.

Dated: November 25, 2011.

Nathaniel J. Davis, Sr.,

Deputy Secretary.

[FR Doc. 2011–31003 Filed 12–1–11; 8:45 am]

BILLING CODE 6717–01–P

DEPARTMENT OF ENERGY

Federal Energy Regulatory Commission

[Docket No. EL12–11–000]

Rail Splitter Wind Farm, LLC v. Ameren Services Company Midwest Independent Transmission, System Operator, Inc.; Notice of Complaint

Take notice that on November 23, 2011, pursuant to section 206 of the Federal Power Act (FPA), 16 U.S.C. 824e, and Rule 206 of the Federal Energy Regulatory Commission's (Commission) Rules of Practice and Procedures, 18 CFR 385.206, Rail Splitter Wind Farm, LLC (Rail Splitter or Complainant) filed a formal complaint against Ameren Services Company (Ameren) and the Midwest Independent Transmission System Operator, Inc. (collectively, Respondents) challenging the rate under the Facilities Services Agreement between Rail Splitter and Ameren dated January 10, 2010 as unjust and unreasonable, in violation of sections 205 and 206 of the FPA.

The Complainant certifies that copies of the complaint were served upon Respondents.

Any person desiring to intervene or to protest this filing must file in accordance with Rules 211 and 214 of the Commission's Rules of Practice and Procedure (18 CFR 385.211 and 385.214). Protests will be considered by the Commission in determining the appropriate action to be taken, but will not serve to make protestants parties to the proceeding. Any person wishing to become a party must file a notice of intervention or motion to intervene, as appropriate. The Respondent's answer and all interventions, or protests must be filed on or before the comment date. The Respondent's answer, motions to intervene, and protests must be served on the Complainants.

The Commission encourages electronic submission of protests and interventions in lieu of paper using the ''eFiling'' link at *http://www.ferc.gov.* Persons unable to file electronically should submit an original and 14 copies of the protest or intervention to the Federal Energy Regulatory Commission, 888 First Street, NE., Washington, DC 20426.

This filing is accessible on-line at *http://www.ferc.gov,* using the ''eLibrary'' link and is available for review in the Commission's Public Reference Room in Washington, DC. There is an ''eSubscription'' link on the web site that enables subscribers to receive email notification when a document is added to a subscribed docket(s). For assistance with any FERC Online service, please email *FERCOnlineSupport@ferc.gov,* or call (866) 208–3676 (toll free). For TTY, call (202) 502–8659.

Comment Date: 5 p.m. Eastern Time on December 13, 2011.

Dated: November 25, 2011.

Kimberly D. Bose,

Secretary.

[FR Doc. 2011–30970 Filed 12–1–11; 8:45 am]

BILLING CODE 6717–01–P

DEPARTMENT OF ENERGY

Federal Energy Regulatory Commission

[Docket No. ID–6729–000]

Hermance, Frank S.; Notice of Filing

Take notice that on November 23, 2011, Frank S. Hermance submitted for filing, an application for authority to hold interlocking positions, pursuant to section 305(b) of the Federal Power Act, 16 U.S.C. 825d (b) and Part 45 of Title 18 of the Code of Federal Regulations, 18 CFR part 45.

Any person desiring to intervene or to protest this filing must file in accordance with Rules 211 and 214 of the Commission's Rules of Practice and Procedure (18 CFR 385.211, 385.214). Protests will be considered by the Commission in determining the appropriate action to be taken, but will not serve to make protestants parties to the proceeding. Any person wishing to become a party must file a notice of intervention or motion to intervene, as appropriate. Such notices, motions, or protests must be filed on or before the comment date. On or before the comment date, it is not necessary to serve motions to intervene or protests on persons other than the Applicant.

The Commission encourages electronic submission of protests and interventions in lieu of paper using the ''eFiling'' link at *http://www.ferc.gov.* Persons unable to file electronically should submit an original and 14 copies of the protest or intervention to the Federal Energy Regulatory Commission, 888 First Street, NE., Washington, DC 20426.

This filing is accessible on-line at *http://www.ferc.gov,* using the ''eLibrary'' link and is available for review in the Commission's Public Reference Room in Washington, DC. There is an ''eSubscription'' link on the web site that enables subscribers to receive email notification when a document is added to a subscribed docket(s). For assistance with any FERC Online service, please email *FERCOnlineSupport@ferc.gov,* or call (866) 208–3676 (toll free). For TTY, call (202) 502–8659.

Comment Date: 5 p.m. Eastern Time on December 14, 2011.

Dated: November 25, 2011.

Kimberly D. Bose,

Secretary.

[FR Doc. 2011–30971 Filed 12–1–11; 8:45 am]

BILLING CODE 6717–01–P

DEPARTMENT OF ENERGY

Federal Energy Regulatory Commission

[Project No. 14290–000]

Porcupine Dam Hydropower Project; Notice of Preliminary Permit Application Accepted for Filing and Soliciting Comments, Motions To Intervene, and Competing Applications

On September 20, 2011, Porcupine Reservoir Company, Utah, filed an application for a preliminary permit, pursuant to section 4(f) of the Federal Power Act (FPA), proposing to study the feasibility of the Porcupine Dam Hydropower Project to be located on the East Fork of the Little Bear River near the town of Avon, the county of Cache, Utah. The sole purpose of a preliminary permit, if issued, is to grant the permit holder priority to file a license application during the permit term. A preliminary permit does not authorize the permit holder to perform any land-disturbing activities or otherwise enter upon lands or waters owned by others without the owners' express permission.

The proposed project would consist of the existing Porcupine reservoir, powerhouse with three turbines, and a 12.5-kilovolt transmission line. The reservoir, formed by a 181-foot-high by 665-foot-long, earth-filled embankment, has a total storage capacity of 13,000 acre-feet and a water surface area of 190 acres at full pool elevation of 5,383 feet above mean sea level. The turbines total 560 kilowatts (kW) (2 units x 235 kW and 1 unit x 90 kW) of generating capacity producing roughly 2,500 megawatt-hours per year.

The proposed penstock would be located within a close proximity to the original penstock, which was removed in 1999. The turbines would be evaluated to determine feasibility of increasing energy production capacity to 750 kW.

Applicant Contact: Phil Olson, Porcupine Reservoir Company, 9808 S 280 E, Paradise, UT 84328; phone (435) 245–3326.

FERC Contact: Brian Csernak; phone: (202) 502–6144.

Deadline for filing comments, motions to intervene, competing applications (without notices of intent), or notices of intent to file competing applications: 60 days from the issuance of this notice. Competing applications and notices of intent must meet the requirements of 18 CFR 4.36. Comments, motions to intervene, notices of intent, and competing applications may be filed electronically via the Internet. See 18 CFR 385.2001(a)(1)(iii) and the instructions on the Commission's Web site *http://www.ferc.gov/docs-filing/efiling.asp.* Commenters can submit brief comments up to 6,000 characters, without prior registration, using the eComment system at *http://www.ferc.gov/docs-filing/ecomment.asp.* You must include your name and contact information at the end of your comments. For assistance, please contact FERC Online Support at *FERCOnlineSupport@ferc.gov* or toll free at 1–(866) 208–3676, or for TTY, (202) 502–8659. Although the Commission strongly encourages electronic filing, documents may also be paper-filed. To paper-file, mail an original and seven copies to: Kimberly D. Bose, Secretary, Federal Energy Regulatory Commission, 888 First Street NE., Washington, DC 20426.

More information about this project, including a copy of the application, can be viewed or printed on the ''eLibrary'' link of Commission's Web site at *http://www.ferc.gov/docs-filing/efiling.asp.* Enter the docket number (P–14290–000) in the docket number field to access the document. For assistance, contact FERC Online Support.

Dated: November 25, 2011.

Kimberly D. Bose,

Secretary.

[FR Doc. 2011–30968 Filed 12–1–11; 8:45 am]

BILLING CODE 6717–01–P

DEPARTMENT OF ENERGY

Federal Energy Regulatory Commission

[Project No. 13254–001]

Castle Creek Hydroelectric Project; Notice of Preliminary Permit Application Accepted for Filing and Soliciting Comments, Motions To Intervene, and Competing Applications

On November 1, 2011, the City of Aspen, Colorado, filed an application for a successive preliminary permit, pursuant to section 4(f) of the Federal Power Act (FPA), proposing to study the feasibility of the Castle Creek Hydroelectric Project to be located on Castle Creek, near the town of Aspen, Pitkin County, Colorado. The project would affect federal lands administered by the Forest Service. The sole purpose of a preliminary permit, if issued, is to grant the permit holder priority to file a license application during the permit term. A preliminary permit does not authorize the permit holder to perform any land-disturbing activities or otherwise enter upon lands or waters owned by others without the owners' express permission.

The proposed project would consist of the existing Thomas reservoir, Castle Creek and Maroon Creek diversions, a recently constructed penstock, and a 25-kilovolt transmission line. The reservoir, formed by a 13-foot-high upstream heel and 30-foot-high downstream toe, has a total storage capacity of 15 acre-feet and a water surface area of 0.6 acre at full pool elevation of 8,175 feet above mean sea level. The penstock consists of a 42-inch-diameter, 4,000-foot-long pipeline connecting the reservoir to the proposed powerhouse.

The proposed powerhouse would be located adjacent to the original hydroelectric plant, with a single shaft Pelton turbine, producing 1.175 megawatts of generating capacity. The annual energy output would be approximately 7.7 gigawatthours.

Applicant Contact: David Hornbacher, The City of Aspen, 130 South Galena Street, Aspen, CO 81611; phone (970) 429–1983.

FERC Contact: Brian Csernak; phone: (202) 502–6144.

Deadline for filing comments, motions to intervene, competing applications (without notices of intent), or notices of intent to file competing applications: 60 days from the issuance of this notice. Competing applications and notices of intent must meet the requirements of 18 CFR 4.36. Comments, motions to intervene, notices of intent, and competing applications may be filed electronically via the Internet. See 18 CFR 385.2001(a)(1)(iii) and the instructions on the Commission's Web site *http://www.ferc.gov/docs-filing/efiling.asp.* Commenters can submit brief comments up to 6,000 characters, without prior registration, using the eComment system at *http://www.ferc.gov/docs-filing/ecomment.asp.* You must include your name and contact information at the end of your comments. For assistance, please contact FERC Online Support at *FERCOnlineSupport@ferc.gov* or toll free at 1–(866) 208–3676, or for TTY, (202) 502–8659. Although the Commission strongly encourages electronic filing, documents may also be paper-filed. To paper-file, mail an original and seven copies to: Kimberly D. Bose, Secretary, Federal Energy Regulatory Commission, 888 First Street NE., Washington, DC 20426.

More information about this project, including a copy of the application, can be viewed or printed on the ''eLibrary'' link of Commission's Web site at *http://www.ferc.gov/docs-filing/elibrary.asp.* Enter the docket number (P–13254–001) in the docket number field to access the document. For assistance, contact FERC Online Support.

Dated: November 25, 2011.

Kimberly D. Bose,

Secretary.

[FR Doc. 2011–30972 Filed 12–1–11; 8:45 am]

BILLING CODE 6717–01–P

DEPARTMENT OF ENERGY

Federal Energy Regulatory Commission

[Project No. 10172–038]

Missisquoi River Technologies; Missisquoi River Hydro LLC; Notice of Transfer of Exemption

1. By letter filed November 16, 2011, Missisquoi River Technologies informed the Commission that its exemption from licensing for the North Troy Hydroelectric Project No. 10172, originally issued June 29, 1989,[1] has been transferred to Missisquoi River Hydro LLC. The project is located on the Missisquoi River in Orleans County, Vermont. The transfer of an exemption does not require Commission approval.

2. Missisquoi River Hydro LLC, located at 453 East Hill Rd., Middlesex, VT 05602, is now the exemptee of the North Troy Hydroelectric Project No. 10172.

Dated: November 28, 2011.

Kimberly D. Bose,

Secretary.

[FR Doc. 2011–31029 Filed 12–1–11; 8:45 am]

BILLING CODE 6717–01–P

ENVIRONMENTAL PROTECTION AGENCY

[ER–FRL–9000–3]

Environmental Impacts Statements; Notice of Availability

Responsible Agency: Office of Federal Activities, General Information (202)

[1] 47 FERC ¶ 62,284 (1989).

564–1399 or *http://www.epa.gov/compliance/nepa/*.

Weekly receipt of Environmental Impact Statements

Filed 11/14/2011 through 11/18/2011

Pursuant to 40 CFR 1506.9.

Notice

Section 309(a) of the Clean Air Act requires that EPA make public its comments on EISs issued by other Federal agencies. EPA's comment letters on EIS are available at: *http://www.epa.gov/compliance/nepa/eisdata.html*.

EIS No. 20110402, Draft EIS, USAF, OH, Wright-Patterson Air Force Base (WPAFB) Project, Reconfigure and Relocate Facilities and Base Perimeter Fence Relocation Area, OH, *Comment Period Ends:* 01/17/2012, *Contact:* Karen Beason (937) 257–5899.

EIS No. 20110403, Draft EIS, USFS, CA, Creeks II Forest Restoration Project, Proposal to Protect Rural Communities from Fire Hazards by Constructing Fuel Breaks Known as Defensible Fuel Profile Zones (DFPZs), Lassen National Forest, Almanor Ranger District, Plumas County, CA, *Comment Period Ends:* 01/17/2012, *Contact:* Blair Halbrooks (530) 258–5160.

EIS No. 20110404, Draft EIS, BLM, NV, Mount Hope Project, Molybdenum Mining and Processing Operation in Eureka County, NV, *Comment Period Ends:* 03/07/2012, *Contact:* Angelica Rose (775) 635–4000.

EIS No. 20110405, Third Final Supplement, USFS, MT, Bozeman Municipal Watershed Project, Minor Changes to FSEIS of May 2011, to Address New Additions to the Sensitive Species List, to Implement Fuel Reduction Activities, Bozeman Ranger District, Gallatin National Forest, City of Bozeman Municipal Watershed, Gallatin County, MT, *Review Period Ends:* 01/03/2012, *Contact:* Teri Seth (406) 522–2539.

EIS No. 20110406, Draft EIS, USN, CA, Marine Corps Base Camp Pendleton Project, Basewide Water Infrastructure and Stuart Mesa Bridge Replacement, Implementation, San Diego County, CA, *Comment Period Ends:* 01/17/2012, *Contact:* Jesse Martinez (619) 532–3844.

EIS No. 20110407, Draft Supplement, USFS, ID, Lakeview-Reeder Fuels Reduction Project, Proposed Fuels Reduction and Road Treatment Activities, Updated and New Information, Idaho Panhandle National Forests, Priest Lake Ranger District, Bonner County, ID, *Comment Period Ends:* 01/17/2012, *Contact:* Albert Helgenberg (208) 265–6643.

EIS No. 20110408, Final EIS, USFS, ID, Lower Orogrande Project, Proposes Watershed Improvement Timber Harvest and Wildlife Habitat Enhancement Activities, North Fork Ranger District, Clearwater National Forest, Clearwater County, ID, *Review Period Ends:* 01/03/2012, *Contact:* Kathy Rodriguez (208) 476–4541.

Amended Notices

EIS No. 20110327, Draft EIS, BR, 00, Klamath Facilities Removal Project, Advance Restoration of the Salmonid Fisheries Klamath Basin, Siskiyou County, CA and Klamath County, OR, *Comment Period Ends:* 12/30/2011, *Contact:* Elizabeth Vasqueuz (916) 978–5055. Revision to FR Notice 09/30/2011: Extending Comment Period from 11/29/2011 to 12/30/2011.

Dated: November 29, 2011.

Cliff Rader,

Acting Director, NEPA Compliance Division, Office of Federal Activities.

[FR Doc. 2011–31032 Filed 12–1–11; 8:45 am]

BILLING CODE 6560–50–P

ENVIRONMENTAL PROTECTION AGENCY

[FRL–9497–4]

Proposed Consent Decree, Clean Air Act Citizen Suit

AGENCY: Environmental Protection Agency (EPA).

ACTION: Notice of Proposed Consent Decree; Request for Public Comment.

SUMMARY: In accordance with section 113(g) of the Clean Air Act, as amended (''CAA'' or the ''Act''), 42 U.S.C. 7413(g), notice is hereby given of a proposed consent decree to address a lawsuit filed by National Parks Conservation Association, Montana Environmental Information Center, Grand Canyon Trust, San Juan Citizens Alliance, Our Children's Earth Foundation, Plains Justice, Powder River Basin Resource Council, Sierra Club, and Environmental Defense Fund (collectively ''Plaintiffs'') in the United States District Court for the District of Columbia: *National Parks Conservation Association, et al.* v. *Jackson,* No. 1:11–cv–1548 (D.D.C.). Plaintiffs filed a complaint alleging that EPA failed to promulgate regional haze federal implementation plans (FIPs) or approve regional haze state implementation plans (SIPs) for 34 states, as required by section 110(c) of the CAA. The complaint further alleges that EPA has also failed to act on ten regional haze SIPs submissions, as required by section 110(k) of the CAA. The proposed consent decree establishes proposed and final promulgation deadlines for EPA for meeting these obligations.

DATES: Written comments on the proposed consent decree must be received by *January 3, 2012.*

ADDRESSES: Submit your comments, identified by Docket ID number EPA–HQ–OGC–2011–0929, online at *http://www.regulations.gov* (EPA's preferred method); by email to *oei.docket@epa.gov;* by mail to EPA Docket Center, Environmental Protection Agency, Mailcode: 2822T, 1200 Pennsylvania Ave. NW., Washington, DC 20460–0001; or by hand delivery or courier to EPA Docket Center, EPA West, Room 3334, 1301 Constitution Ave. NW., Washington, DC, between 8:30 a.m. and 4:30 p.m. Monday through Friday, excluding legal holidays. Comments on a disk or CD–ROM should be formatted in Word or ASCII file, avoiding the use of special characters and any form of encryption, and may be mailed to the mailing address above.

FOR FURTHER INFORMATION CONTACT: Lea Anderson, Air and Radiation Law Office (2344A), Office of General Counsel, U.S. Environmental Protection Agency, 1200 Pennsylvania Ave. NW., Washington, DC 20460; *telephone:* (202) 564–5571; fax number (202) 564–5603; email address: *anderson.lea@epa.gov.*

SUPPLEMENTARY INFORMATION:

I. Additional Information About the Proposed Consent Decree

Under section 110(c) of the CAA, EPA has a mandatory duty to promulgate a federal implementation plan (''FIP'') within two years of a finding that a state has failed to make a required state implementation plan (''SIP'') submittal. EPA is not required to promulgate a FIP, however, if the state submits the required SIP and EPA approves the plan within the two years of EPA's finding. On January 15, 2009, EPA found that 37 states, the District of Columbia, and the U.S. Virgin Islands had failed to submit CAA SIPs for improving visibility in mandatory Federal Class I areas.

Where a state has submitted a SIP and the SIP has been deemed complete, section 110(k)(2) of the CAA requires EPA to act on the SIP within twelve months. EPA has received regional haze SIP submissions from a number of states but has not yet taken action on these SIPs.

The proposed consent decree would resolve a deadline suit filed by Plaintiffs for EPA to take action on a number of regional haze SIPs. The proposed consent decree would address EPA's failure to promulgate regional haze FIPs

or approve regional haze SIPs for 34 of the states that the Agency found on January 15, 2009 had failed to submit SIPs addressing the requirements of the regional haze program. These 34 states are Alaska, California, Connecticut, District of Columbia, Florida, Georgia, Hawaii, Idaho, Illinois, Indiana, Kansas, Maine, Maryland, Massachusetts, Minnesota, Montana, Nebraska, Nevada, New Hampshire, New Jersey, New York, North Dakota, Ohio, Oklahoma, Oregon, Pennsylvania, Rhode Island, South Dakota, Texas, Vermont, U.S. Virgin Islands, Virginia, Washington, and Wisconsin. The proposed consent decree would also address EPA's failure to act on ten regional haze SIPs that have been submitted to EPA and deemed complete. These SIPs were submitted by Alabama, Albuquerque, NM, Iowa, Louisiana, Mississippi, Missouri, North Carolina, South Carolina, Tennessee, and West Virginia.

The proposed consent decree establishes proposed and final promulgation deadlines for EPA for meeting these obligations. It further requires that, within ten (10) business days of signing a proposed or final rulemaking, EPA shall deliver a notice of such rulemaking to the Office of the Federal Register for prompt publication and shall provide a copy of the notice to Plaintiffs within five (5) days. After EPA fulfills its obligations under the proposed consent decree, EPA may move to have this decree terminated.

For a period of thirty (30) days following the date of publication of this notice, the Agency will accept written comments relating to the proposed consent decree from persons who were not named as parties or intervenors to the litigation in question. EPA or the Department of Justice may withdraw or withhold consent to the proposed consent decree if the comments disclose facts or considerations that indicate that such consent is inappropriate, improper, inadequate, or inconsistent with the requirements of the Act. Unless EPA or the Department of Justice determines that consent to this consent decree should be withdrawn, the terms of the proposed consent decree will be affirmed.

II. Additional Information About Commenting on the Proposed Consent Decree

A. How can I get a copy of the consent decree?

The official public docket for this action (identified by Docket ID No. EPA–HQ–OGC–2011–0929) contains a copy of the proposed consent decree. The official public docket is available for public viewing at the Office of Environmental Information (OEI) Docket in the EPA Docket Center, EPA West, Room 3334, 1301 Constitution Ave. NW., Washington, DC. The EPA Docket Center Public Reading Room is open from 8:30 a.m. to 4:30 p.m., Monday through Friday, excluding legal holidays. The telephone number for the Public Reading Room is (202) 566–1744, and the telephone number for the OEI Docket is (202) 566–1752.

An electronic version of the public docket is available through *http://www.regulations.gov.* You may use *http://www.regulations.gov* to submit or view public comments, access the index listing of the contents of the official public docket, and to access those documents in the public docket that are available electronically. Once in the system, key in the appropriate docket identification number then select ''search''.

It is important to note that EPA's policy is that public comments, whether submitted electronically or in paper, will be made available for public viewing online at *http://www.regulations.gov* without change, unless the comment contains copyrighted material, CBI, or other information whose disclosure is restricted by statute. Information claimed as CBI and other information whose disclosure is restricted by statute is not included in the official public docket or in the electronic public docket. EPA's policy is that copyrighted material, including copyrighted material contained in a public comment, will not be placed in EPA's electronic public docket but will be available only in printed, paper form in the official public docket. Although not all docket materials may be available electronically, you may still access any of the publicly available docket materials through the EPA Docket Center.

B. How and to whom do I submit comments?

You may submit comments as provided in the **ADDRESSES** section. Please ensure that your comments are submitted within the specified comment period. Comments received after the close of the comment period will be marked ''late.'' EPA is not required to consider these late comments.

If you submit an electronic comment, EPA recommends that you include your name, mailing address, and an email address or other contact information in the body of your comment and with any disk or CD ROM you submit. This ensures that you can be identified as the submitter of the comment and allows EPA to contact you in case EPA cannot read your comment due to technical difficulties or needs further information on the substance of your comment. Any identifying or contact information provided in the body of a comment will be included as part of the comment that is placed in the official public docket, and made available in EPA's electronic public docket. If EPA cannot read your comment due to technical difficulties and cannot contact you for clarification, EPA may not be able to consider your comment.

Use of the *http://www.regulations.gov* Web site to submit comments to EPA electronically is EPA's preferred method for receiving comments. The electronic public docket system is an ''anonymous access'' system, which means EPA will not know your identity, email address, or other contact information unless you provide it in the body of your comment. In contrast to EPA's electronic public docket, EPA's electronic mail (email) system is not an ''anonymous access'' system. If you send an email comment directly to the Docket without going through *http://www.regulations.gov,* your email address is automatically captured and included as part of the comment that is placed in the official public docket, and made available in EPA's electronic public docket.

Dated: November 22, 2011.

Kevin McLean,

Acting Associate General Counsel.

[FR Doc. 2011–31019 Filed 12–1–11; 8:45 am]

BILLING CODE 6560–50–P

ENVIRONMENTAL PROTECTION AGENCY

[FRL–9497–3]

Proposed Consent Decree, Clean Air Act Citizen Suit

AGENCY: Environmental Protection Agency (EPA).

ACTION: Notice of proposed consent decree; request for public comment.

SUMMARY: In accordance with section 113(g) of the Clean Air Act, as amended (''CAA'' or the ''Act''), 42 U.S.C. 7413(g), notice is hereby given of a proposed consent decree to address a lawsuit filed by El Comité para el Bienestar de Earlimart and Association of Irritated Residents (collectively ''Plaintiffs'') in the United States District Court for the Northern District of California: *El Comité para el Bienestar de Earlimart, et al.* v. *Jackson,* No. 11–cv–3779 (N.D. Cal). On August 1, 2011, Plaintiffs filed a complaint alleging that EPA failed to perform a mandatory duty under section 110(k)(2) of the CAA, 42

U.S.C. 7410(k)(2) to take timely final action to approve, disapprove, or partially approve/disapprove the proposed state implementation plan commitment for the San Joaquin Valley, as well as regulations pertaining to field fumigation methods, pesticide emission inventory, and field fumigation limits. The proposed consent decree establishes a deadline for EPA to take action.

DATES: Written comments on the proposed consent decree must be received by *January 3, 2012.*

ADDRESSES: Submit your comments, identified by Docket ID number EPA–HQ–OGC–2011–0930, online at *http://www.regulations.gov* (EPA's preferred method); by email to *oei.docket@epa.gov;* by mail to EPA Docket Center, Environmental Protection Agency, Mailcode: 2822T, 1200 Pennsylvania Ave. NW., Washington, DC 20460–0001; or by hand delivery or courier to EPA Docket Center, EPA West, Room 3334, 1301 Constitution Ave. NW., Washington, DC, between 8:30 a.m. and 4:30 p.m. Monday through Friday, excluding legal holidays. Comments on a disk or CD–ROM should be formatted in Word or ASCII file, avoiding the use of special characters and any form of encryption, and may be mailed to the mailing address above.

FOR FURTHER INFORMATION CONTACT: Jan Tierney, Air and Radiation Law Office (2344A), Office of General Counsel, U.S. Environmental Protection Agency, 1200 Pennsylvania Ave. NW., Washington, DC 20460; *telephone:* (202) 564–5598; *fax number* (202) 564–5603; email address: *tierney.jan@epa.gov.*

SUPPLEMENTARY INFORMATION:

I. Additional Information About the Proposed Consent Decree

The proposed consent decree would resolve a lawsuit seeking to compel the Administrator to take timely final action under section 110(k) of the CAA to approve, disapprove, or partially approve/disapprove the proposed state implementation plan commitment for the San Joaquin Valley (Pesticide Element SIP Submittal), as well as regulations pertaining to field fumigation methods, pesticide emission inventory, and field fumigation limits (Fumigant Rules SIP Submittal), which were submitted to EPA on October 12, 2009. The proposed consent decree requires that no later than April 15, 2012, EPA shall sign a notice or notices of the Agency's proposed action or actions on the Revised Pesticide Element SIP Submittal and the Fumigant Rules SIP Submittal pursuant to Section 110(k) of the CAA, 42 U.S.C. 7410(k). The proposed consent decree further provides that no later than August 15, 2012, EPA shall sign a notice or notices of the Agency's final action or actions on the Revised Pesticide Element SIP Submittal and the Fumigant Rules SIP Submittal pursuant to Section 110(k) of the CAA, 42 U.S.C. 7410(k). No later than 15 business days following signature, EPA shall send the notice or notices to the Office of the Federal Register for review and publication in the **Federal Register**. After EPA fulfills its obligations under the decree, the parties shall file a joint request to the Court to dismiss this matter with prejudice.

For a period of thirty (30) days following the date of publication of this notice, the Agency will accept written comments relating to the proposed consent decree from persons who were not named as parties or intervenors to the litigation in question. EPA or the Department of Justice may withdraw or withhold consent to the proposed consent decree if the comments disclose facts or considerations that indicate that such consent is inappropriate, improper, inadequate, or inconsistent with the requirements of the Act. Unless EPA or the Department of Justice determines that consent to this consent decree should be withdrawn, the terms of the decree will be affirmed.

II. Additional Information About Commenting on the Proposed Consent Decree

A. How can I get a copy of the consent decree?

The official public docket for this action (identified by Docket ID No. EPA–HQ–OGC–2011–0930) contains a copy of the proposed consent decree. The official public docket is available for public viewing at the Office of Environmental Information (OEI) Docket in the EPA Docket Center, EPA West, Room 3334, 1301 Constitution Ave. NW., Washington, DC. The EPA Docket Center Public Reading Room is open from 8:30 a.m. to 4:30 p.m., Monday through Friday, excluding legal holidays. The telephone number for the Public Reading Room is (202) 566–1744, and the telephone number for the OEI Docket is (202) 566–1752.

An electronic version of the public docket is available through *http://www.regulations.gov.* You may use *http://www.regulations.gov* to submit or view public comments, access the index listing of the contents of the official public docket, and to access those documents in the public docket that are available electronically. Once in the system, key in the appropriate docket identification number then select ''search''.

It is important to note that EPA's policy is that public comments, whether submitted electronically or in paper, will be made available for public viewing online at *http://www.regulations.gov* without change, unless the comment contains copyrighted material, CBI, or other information whose disclosure is restricted by statute. Information claimed as CBI and other information whose disclosure is restricted by statute is not included in the official public docket or in the electronic public docket. EPA's policy is that copyrighted material, including copyrighted material contained in a public comment, will not be placed in EPA's electronic public docket but will be available only in printed, paper form in the official public docket. Although not all docket materials may be available electronically, you may still access any of the publicly available docket materials through the EPA Docket Center.

B. How and to whom do I submit comments?

You may submit comments as provided in the **ADDRESSES** section. Please ensure that your comments are submitted within the specified comment period. Comments received after the close of the comment period will be marked ''late.'' EPA is not required to consider these late comments.

If you submit an electronic comment, EPA recommends that you include your name, mailing address, and an email address or other contact information in the body of your comment and with any disk or CD ROM you submit. This ensures that you can be identified as the submitter of the comment and allows EPA to contact you in case EPA cannot read your comment due to technical difficulties or needs further information on the substance of your comment. Any identifying or contact information provided in the body of a comment will be included as part of the comment that is placed in the official public docket, and made available in EPA's electronic public docket. If EPA cannot read your comment due to technical difficulties and cannot contact you for clarification, EPA may not be able to consider your comment.

Use of the *http://www.regulations.gov* Web site to submit comments to EPA electronically is EPA's preferred method for receiving comments. The electronic public docket system is an ''anonymous access'' system, which means EPA will not know your identity, email address, or other contact information unless you provide it in the body of your comment.

In contrast to EPA's electronic public docket, EPA's electronic mail (email) system is not an ''anonymous access'' system. If you send an email comment directly to the Docket without going through *http://www.regulations.gov,* your email address is automatically captured and included as part of the comment that is placed in the official public docket, and made available in EPA's electronic public docket.

Kevin McLean,

Acting Associate General Counsel.

[FR Doc. 2011–31028 Filed 12–1–11; 8:45 am]

BILLING CODE 6560–50–P

FEDERAL COMMUNICATIONS COMMISSION

[CC Docket No. 92–237; DA 11–1917]

Next Meeting of the North American Numbering Council

AGENCY: Federal Communications Commission.

ACTION: Notice.

SUMMARY: In this document, the Commission released a public notice announcing the meeting and agenda of the North American Numbering Council (NANC). The intended effect of this action is to make the public aware of the NANC's next meeting and agenda.

DATES: Thursday, December 15, 2011, 9:30 a.m.

ADDRESSES: Requests to make an oral statement or provide written comments to the NANC should be sent to Deborah Blue, Competition Policy Division, Wireline Competition Bureau, Federal Communications Commission, Portals II, 445 Twelfth Street SW., Room 5–C162, Washington, DC 20554.

FOR FURTHER INFORMATION CONTACT: Deborah Blue, Special Assistant to the Designated Federal Officer (DFO) at (202) 418–1466 or *Deborah.Blue@fcc.gov.* The fax number is: (202) 418–1413. The TTY number is: (202) 418–0484.

SUPPLEMENTARY INFORMATION: This is a summary of the Commission's document in CC Docket No. 92–237, DA 11–1917 released November 18, 2011. The complete text in this document is available for public inspection and copying during normal business hours in the FCC Reference Information Center, Portals II, 445 12th Street SW., Room CY–A257, Washington, DC 20554. The document my also be purchased from the Commission's duplicating contractor, Best Copy and Printing, Inc., 445 12th Street SW., Room CY–B402, Washington, DC 20554, telephone (800) 378–3160 or (202) 863–2893, facsimile (202) 863–2898, or via the Internet at *http://www.bcpiweb.com.* It is available on the Commission's Web site at *http://www.fcc.gov.*

The North American Numbering Council (NANC) has scheduled a meeting to be held Thursday, December 15, 2011, from 9:30 a.m. until 2 p.m. The meeting will be held at the Federal Communications Commission, Portals II, 445 Twelfth Street, SW., Room TW–C305, Washington, DC. This meeting is open to members of the general public. The FCC will attempt to accommodate as many participants as possible. The public may submit written statements to the NANC, which must be received two business days before the meeting. In addition, oral statements at the meeting by parties or entities not represented on the NANC will be permitted to the extent time permits. Such statements will be limited to five minutes in length by any one party or entity, and requests to make an oral statement must be received two business days before the meeting.

People with Disabilities: To request materials in accessible formats for people with disabilities (braille, large print, electronic files, audio format), send an email to *fcc504@fcc.gov* or call the Consumer and Governmental Affairs Bureau at (202) 418–0530 (voice), (202) 418–0432 (tty). Reasonable accommodations for people with disabilities are available upon request. Include a description of the accommodation you will need, including as much detail as you can. Also include a way we can contact you if we need more information. Please allow at least five days advance notice; last minute requests will be accepted, but may be impossible to fill.

Proposed Agenda: Thursday, December 15, 2011, 9:30 a.m.*

1. Announcements and Recent News.
2. Approval of Transcript—Meeting of September 15, 2011.
3. Report of the North American Numbering Plan Administrator (NANPA).
4. Report of the National Thousands Block Pooling Administrator (PA).
5. Report of the Numbering Oversight Working Group (NOWG).
6. Report of the North American Numbering Plan Billing and Collection (NANP B&C) Agent.
7. Report of the Billing and Collection Working Group (B&C WG).
8. Report of the North American Portability Management LLC (NAPM LLC).
9. Report of the LNPA Selection Working Group (SWG).
10. Report of the Local Number Portability Administration (LNPA) Working Group.
11. Status of the Industry Numbering Committee (INC) activities.
12. Report of the Future of Numbering Working Group (FoN WG).
13. Summary of Action Items.
14. Public Comments and Participation (5 minutes per speaker).
15. Other Business.

Adjourn no later than 2 p.m.

* The Agenda may be modified at the discretion of the NANC Chairman with the approval of the DFO.

Federal Communications Commission.

Marilyn Jones,

Attorney, Wireline Competition Bureau.

[FR Doc. 2011–31041 Filed 11–29–11; 4:15 pm]

BILLING CODE 6712–01–P

FEDERAL RESERVE SYSTEM

Agency Information Collection Activities: Announcement of Board Approval Under Delegated Authority and Submission to OMB

AGENCY: Board of Governors of the Federal Reserve System.

SUMMARY: Notice is hereby given of the final approval of a proposed information collection by the Board of Governors of the Federal Reserve System (Board) under OMB delegated authority, as per 5 CFR 1320.16 (OMB Regulations on Controlling Paperwork Burdens on the Public). Board-approved collections of information are incorporated into the official OMB inventory of currently approved collections of information. Copies of the Paperwork Reduction Act Submission, supporting statements and approved collection of information instrument(s) are placed into OMB's public docket files. The Federal Reserve may not conduct or sponsor, and the respondent is not required to respond to, an information collection that has been extended, revised, or implemented on or after October 1, 1995, unless it displays a currently valid OMB control number.

FOR FURTHER INFORMATION CONTACT: Federal Reserve Board Clearance Officer—Cynthia Ayouch—Division of Research and Statistics, Board of Governors of the Federal Reserve System, Washington, DC 20551 (202) 452–3829). Telecommunications Device for the Deaf (TDD) users may contact (202) 263–4869), Board of Governors of the Federal Reserve System, Washington, DC 20551.

OMB Desk Officer—Shagufta Ahmed—Office of Information and Regulatory Affairs, Office of

Management and Budget, New Executive Office Building, Room 10235, 725 17th Street NW., Washington, DC 20503.

Final approval under OMB delegated authority of the extension for three years, with revision, of the following report:

Report title: Recordkeeping and Disclosure Requirements Associated with Loans Secured by Real Estate Located in Flood Hazard Areas Pursuant to Section 208.25 of Regulation H.

Agency form number: Reg H–2.

OMB control number: 7100–0280.

Frequency: Event-generated.

Reporters: State member banks.

Estimated annual reporting hours: Notice of special flood hazards to borrowers and servicers, 5,768 hours; notice to FEMA of servicer, 5,768 hours; notice to FEMA of change of servicer, 2,884 hours; notice to borrowers of lapsed mandated flood insurance, 1,167 hours; purchase flood insurance on the borrower's behalf, 824 hours; notice to borrowers of lapsed mandated flood insurance due to remapping, 549 hours; purchase flood insurance on the borrower's behalf due to remapping, 824 hours; and retention of standard FEMA form, 14,420 hours.

Estimated average hours per response: Notice of special flood hazards to borrowers and servicers, 5 minutes; notice to FEMA of servicer, 5 minutes; notice to FEMA of change of servicer, 5 minutes; notice to borrowers of lapsed mandated flood insurance, 5 minutes; purchase flood insurance on the borrower's behalf, 15 minutes; notice to borrowers of lapsed mandated flood insurance due to remapping, 5 minutes; purchase flood insurance on the borrower's behalf due to remapping, 15 minutes; and retention of standard FEMA form, 2.5 minutes.

Number of respondents: 824.

General description of report: This information collection is mandatory pursuant to Section 12 of the Flood Disaster Protection Act of 1973, as amended (42 U.S.C. 4012a) and section 1364 of the National Flood Insurance Act of 1968, as amended (42 U.S.C. 4104a). Since the Federal Reserve does not collect any information associated with Reg H–2, confidentiality would not generally be an issue. However, confidentiality issues may arise should the records required by the Reg H–2 requirements come into possession of the Board during an examination of a state member bank, those records would be protected from disclosure by exemption 8 of the Freedom of Information Act. (5 U.S.C. 552(b)(8)).

Abstract: Regulation H requires state member banks to notify a borrower and servicer when loans secured by real estate are determined to be in a special flood hazard area and notify them whether flood insurance is available; notify FEMA of the identity of, and any change of, the servicer of a loan secured by real estate in a special flood hazard area; and retain a completed copy of the Standard Flood Hazard Determination Form used to determine whether property securing a loan is in a special flood hazard area.

Current Actions: On September 19, 2011 the Federal Reserve published a notice in the **Federal Register** (76 FR 58003) requesting public comment for 60 days on the extension, with revision, of the Reg H–2 information collection. The comment period for this notice expired on November 18, 2011. The Federal Reserve did not receive any comments. The revisions will be implemented as proposed.

Board of Governors of the Federal Reserve System, November 29, 2011.

Jennifer J. Johnson,

Secretary of the Board.

[FR Doc. 2011–30991 Filed 12–1–11; 8:45 am]

BILLING CODE 6210–01–P

FEDERAL RESERVE SYSTEM

Change in Bank Control Notices; Acquisitions of Shares of a Bank or Bank Holding Company

The notificants listed below have applied under the Change in Bank Control Act (12 U.S.C. 1817(j)) and § 225.41 of the Board's Regulation Y (12 CFR 225.41) to acquire shares of a bank or bank holding company. The factors that are considered in acting on the notices are set forth in paragraph 7 of the Act (12 U.S.C. 1817(j)(7)).

The notices are available for immediate inspection at the Federal Reserve Bank indicated. The notices also will be available for inspection at the offices of the Board of Governors. Interested persons may express their views in writing to the Reserve Bank indicated for that notice or to the offices of the Board of Governors. Comments must be received not later than December 16, 2011.

A. Federal Reserve Bank of Minneapolis (Jacqueline G. King, Community Affairs Officer) 90 Hennepin Avenue, Minneapolis, Minnesota 55480–0291:

1. *Colleen S. Yunker Revocable Trust,* Sturgis, Michigan (trustees Jack Steele, Wolsey, South Dakota, and Sturgis Bank and Trust Company, Sturgis, Michigan), to retain voting shares of Leackco Bank Holding Company, Inc., Wolsey, South Dakota, and thereby indirectly retain voting shares of American Bank & Trust, Wessington Springs, South Dakota.

2. *Eugene Joseph Welle Irrevocable HJW Trust, Hugh J. Welle, Trustee, and Paulette E. Welle,* all of Bemidji, Minnesota; to join the Welle Family Shareholder Group, which controls voting shares of First Bemidji Holding Company, and thereby indirectly controls voting shares of The First National Bank of Bemidji, both in Bemidji, Minnesota.

Board of Governors of the Federal Reserve System, November 28, 2011.

Robert deV. Frierson,

Deputy Secretary of the Board.

[FR Doc. 2011–30949 Filed 12–1–11; 8:45 am]

BILLING CODE 6210–01–P

FEDERAL RESERVE SYSTEM

Formations of, Acquisitions by, and Mergers of Bank Holding Companies

The companies listed in this notice have applied to the Board for approval, pursuant to the Bank Holding Company Act of 1956 (12 U.S.C. 1841 *et seq.*) (BHC Act), Regulation Y (12 CFR part 225), and all other applicable statutes and regulations to become a bank holding company and/or to acquire the assets or the ownership of, control of, or the power to vote shares of a bank or bank holding company and all of the banks and nonbanking companies owned by the bank holding company, including the companies listed below.

The applications listed below, as well as other related filings required by the Board, are available for immediate inspection at the Federal Reserve Bank indicated. The application also will be available for inspection at the offices of the Board of Governors. Interested persons may express their views in writing on the standards enumerated in the BHC Act (12 U.S.C. 1842(c)). If the proposal also involves the acquisition of a nonbanking company, the review also includes whether the acquisition of the nonbanking company complies with the standards in section 4 of the BHC Act (12 U.S.C. 1843). Unless otherwise noted, nonbanking activities will be conducted throughout the United States.

Unless otherwise noted, comments regarding each of these applications must be received at the Reserve Bank indicated or the offices of the Board of Governors not later than December 27, 2011.

A. Federal Reserve Bank of Atlanta (Chapelle Davis, Assistant Vice President) 1000 Peachtree Street NE., Atlanta, Georgia 30309:

1. *TGR Financial, Inc.,* Naples, Florida; to become a bank holding

company by acquiring 100 percent of the voting shares of First National Bank of the Gulf Coast, Naples, Florida.

B. Federal Reserve Bank of St. Louis (Glenda Wilson, Community Affairs Officer) P.O. Box 442, St. Louis, Missouri 63166–2034:

1. *Alton Bancshares, Inc.,* Alton, Missouri; to acquire 100 percent of the voting shares of First Community Bank of the Ozarks, Branson, Missouri.

Board of Governors of the Federal Reserve System, November 28, 2011.

Robert deV. Frierson,

Deputy Secretary of the Board.

[FR Doc. 2011–30947 Filed 12–1–11; 8:45 am]

BILLING CODE 6210–01–P

FEDERAL RESERVE SYSTEM

Notice of Proposals To Engage in or To Acquire Companies Engaged in Permissible Nonbanking Activities

The companies listed in this notice have given notice under section 4 of the Bank Holding Company Act (12 U.S.C. 1843) (BHC Act) and Regulation Y, (12 CFR part 225) to engage *de novo,* or to acquire or control voting securities or assets of a company, including the companies listed below, that engages either directly or through a subsidiary or other company, in a nonbanking activity that is listed in § 225.28 of Regulation Y (12 CFR 225.28) or that the Board has determined by Order to be closely related to banking and permissible for bank holding companies. Unless otherwise noted, these activities will be conducted throughout the United States.

Each notice is available for inspection at the Federal Reserve Bank indicated. The notice also will be available for inspection at the offices of the Board of Governors. Interested persons may express their views in writing on the question whether the proposal complies with the standards of section 4 of the BHC Act.

Unless otherwise noted, comments regarding the applications must be received at the Reserve Bank indicated or the offices of the Board of Governors not later than December 16, 2011.

A. Federal Reserve Bank of Atlanta (Chapelle Davis, Assistant Vice President) 1000 Peachtree Street NE., Atlanta, Georgia 30309:

1. *CenterState Banks, Inc.,* Davenport, Florida; to engage in making, acquiring, brokering, or servicing loans, or other extensions of credit though its subsidiary, R4ALL, Inc., Davenport, Florida, pursuant to section 225.28(b)(1) of Regulation Y.

Board of Governors of the Federal Reserve System, November 28, 2011.

Robert deV. Frierson,

Deputy Secretary of the Board.

[FR Doc. 2011–30948 Filed 11–30–11; 8:45 am]

BILLING CODE 6210–01–P

FEDERAL TRADE COMMISSION

Agency Information Collection Activities; Proposed Collection; Comment Request

AGENCY: Federal Trade Commission (''Commission'' or ''FTC'').

ACTION: Notice.

SUMMARY: The FTC intends to conduct an evaluation of Admongo, its advertising literacy program for children ages 8–12. The evaluation will involve a randomized controlled trial of the Admongo program in one or more school districts, involving 6,000–8,000 students. This research will be conducted to further the FTC's mission of protecting consumers from unfair and deceptive marketing. We will consider comments on this proposed research before submitting a request for Office of Management and Budget (OMB) review under the Paperwork Reduction Act (PRA).

DATES: Comments must be submitted on or before January 31, 2012.

ADDRESSES: Interested parties may file a comment online or on paper, by following the instructions in the Request for Comment part of the **SUPPLEMENTARY INFORMATION** section below. Write ''Admongo Evaluation, FTC File No. P085200'' on your comment, and file your comment online at *https://ftcpublic.commentworks.com/ftc/admongoevaluationpra,* by following the instructions on the web-based form. If you prefer to file your comment on paper, mail or deliver your comment to the following address: Federal Trade Commission, Office of the Secretary, Room H–113 (Annex J), 600 Pennsylvania Avenue NW., Washington, DC 20580.

FOR FURTHER INFORMATION CONTACT: Requests for additional information should be addressed to David Givens, Economist, Bureau of Economics, Federal Trade Commission, 600 Pennsylvania Avenue NW., Mail Stop NJ–4136, Washington, DC 20580. Telephone: (202) 326–3397.

SUPPLEMENTARY INFORMATION:

I. Background

As the nation's consumer protection agency, the FTC is responsible for enforcing laws that prohibit unfair and deceptive advertising and marketing practices. Part of this mission involves educating consumers, including young consumers. In April 2010, the FTC launched a youth-directed multi-media advertising literacy campaign called Admongo and distributed accompanying lesson plans to 100,000 educators in every U.S. public school with a fifth or sixth grade class. Admongo aims to help children from 8 to 12 become more discerning consumers of information. The program has three broad objectives: (1) Raising awareness of advertising and marketing messages; (2) teaching critical thinking skills that will allow children to better analyze and interpret advertisements; and (3) demonstrating the benefits of being an informed consumer. The program teaches students specific skills: How to identify ads, how to identify the ways advertisers target certain groups of consumers, how to spot persuasive techniques commonly employed by ads, and how to apply an understanding of advertising techniques to make smarter purchases. The campaign includes an online game, in-school lesson plans, sample ads that can be used at home and in the classroom, and teacher videos. All materials can be viewed at *http://www.admongo.gov.*

The proposed evaluation will test a large group of students in these skills and then compare the performance of those who have been exposed to the Admongo curriculum with those who have not. The results will give the FTC valuable insight into the optimal design of youth-directed consumer education. The FTC is interested in: The relative effectiveness of in-class versus online instruction, the variation in Admongo's benefits by age, pre-existing levels of ad literacy by age, and the relationship between ad literacy and academic achievement.[1] The FTC also intends to interview teachers who have used the Admongo lessons in their classrooms. Teacher feedback will help us tailor the lessons to real-world classroom conditions.

II. Paperwork Reduction Act

Under the PRA, 44 U.S.C. 3501–3521, federal agencies must obtain approval (''clearance'') from OMB for each collection of information they conduct or sponsor. ''Collection of information'' includes disclosure to an agency, third parties, or the public of information by or for an agency through identical questions posed to, or identical reporting, recordkeeping, or disclosure

[1] All student-level data will be stripped of personally identifiable information by participating school districts before it reaches the FTC.

requirements imposed on, ten or more persons. 44 U.S.C. 3502(3)(A). As required by section 3506(c)(2)(A) of the PRA, the FTC is providing an opportunity for public comment before seeking OMB clearance for the information collections presented here.

The FTC invites comments on: (1) Whether the proposed collection of information is necessary for the proper performance of the functions of the agency, including whether the information will have practical utility; (2) the accuracy of the agency's estimate of the burden of the proposed collection of information, including the validity of the methodology and assumptions used; (3) ways to enhance the quality, utility, and clarity of the information to be collected; and (4) ways to minimize the burden of the collection of information.

A. Description of the Collection of Information and Proposed Use

Subject to OMB approval, the FTC will conduct a randomized trial of the Admongo program in one or more U.S. school districts and involving 6,000–8,000 students ages 8–12. Classrooms in each participating school will be randomly assigned to treatment or control status. In the treatment classrooms, the Admongo lesson plans will be taught over the course of one week, and students will be given in-class time to play the online Admongo game. At the end of the trial, treatment students will take a test in advertising literacy. Students in the control classrooms will take the same test before they are exposed to Admongo.[2] Admongo's effect on ad literacy will be estimated from the difference in test scores. Additional controls measuring classroom, student, and teacher characteristics will increase the precision of the estimate of Admongo's impact.

B. Estimated Burden Hours

Each student's typical social studies or language arts teacher will teach the Admongo lessons. The paper-based test will last approximately 20 minutes. The time required to experience the Admongo lessons, play the online game, and take the test should total approximately five hours and twenty minutes per student (four 45-minute in-class lessons, one hour of online game playing, one hour of homework assignments, and 20 minutes for the test). With an estimated 6,000–8,000 students involved,[3] cumulative burden for students will be in the range of 32,000–42,667 hours. Teachers will require the same time per task as students, but will also need time for lesson planning—estimated at four hours per teacher. Thus, with an estimated 240–320 teachers involved,[4] their time commitment will range from 2,240 to 2,987 hours. The combined time for the Admongo trial should thus fall in the range of 34,240–45,654 hours.

These estimates are conservative. The Admongo lesson plans, tied to national standards of learning, will satisfy a pre-existing content requirement for participating schools.[5] Thus, the incremental PRA burden for teachers and students would be much less than the estimates shown above.[6] For example, if only the time required to take or administer the 20-minute test is considered, the resulting total would be a small fraction of the totals noted above.

A few participating teachers (20–40) also will take part in focus group discussions, lasting approximately 90 minutes. The estimated teacher time in focus groups, including an added hour of round-trip transportation to and from the discussion site, is 50–75 hours. Finally, administering the study will impose a small time burden on school district staff charged with scoring the tests and with compiling a master data set of 8–12 year-old students, stripped of personally identifiable information (to facilitate random assignment to treatment and control groups). These programming and data management tasks should take approximately 10–15 hours.

The cumulative burden for participating students, teachers, and school district staff for the Admongo evaluation will total 34,300–45,744 hours. Again, however, the bulk of this time would be subsumed within pre-existing classroom requirements.

C. Estimated Costs

The cost per respondent should be negligible in both the evaluation and focus group components of the study. The participation of the school district in the evaluation is voluntary, and the district will use the Admongo program to meet curriculum requirements. Thus, participation in the evaluation study will not impose any start-up, capital, or labor expenditures beyond those ordinarily incurred by the district to administer curriculum units. Participation by students in the evaluation and teachers in the focus groups also will be voluntary and not impose any start-up, capital, or labor expenditures. Teachers participating in the focus groups will be compensated at the standard rate paid by the contractor to focus group participants. The school district will be compensated for the cost of the staff time to perform the data management and test-scoring tasks.

D. Request for Comment

You can file a comment online or on paper. For the Commission to consider your comment, we must receive it on or before January 31, 2012. Write ''Admongo Evaluation, FTC File No. P085200'' on your comment. Your comment—including your name and your state—will be placed on the public record of this proceeding, including, to the extent practicable, on the public Commission Web site, at *http://www.ftc.gov/os/publiccomments.shtm.* As a matter of discretion, the Commission tries to remove individuals' home contact information from comments before placing them on the Commission Web site.

Because your comment will be made public, you are solely responsible for making sure that your comment does not include any sensitive personal information, like anyone's Social Security number, date of birth, driver's license number or other state identification number or foreign country equivalent, passport number, financial account number, or credit or debit card number. You are also solely responsible for making sure that your comment does not include any sensitive health information, like medical records or other individually identifiable health information. In addition, don't include any ''[t]rade secret or any commercial or financial information which is obtained from any person and which is privileged or confidential,'' as provided in Section 6(f) of the FTC Act, 15 U.S.C. 46(f), and FTC Rule 4.10(a)(2), 16 CFR 4.10(a)(2). In particular, don't include competitively sensitive information such as costs, sales statistics, inventories, formulas, patterns, devices, manufacturing processes, or customer names.

If you want the Commission to give your comment confidential treatment, you must file it in paper form, with a request for confidential treatment, and you have to follow the procedure

[2] With this protocol, the FTC gets a valid control group while still providing all experiment participants the benefit of the treatment.

[3] Based on an anticipated school district's participation and its approximate student composition at present.

[4] Based on an estimated class size of 25 students and assuming a unique teacher for each classroom. [6,000 ÷ 25 = 240; 8,000 ÷ 25 = 320]

[5] *See http://www.admongo.gov/state-standards/.*

[6] *See* 5 CFR 1320.3(b)(2)(A) (a collection of information incurred by persons in the normal course of their activities is excluded from ''burden'' to the extent that the activities necessary to comply with it are ''usual and customary'').

explained in FTC Rule 4.9(c), 16 CFR 4.9(c).[7] Your comment will be kept confidential only if the FTC General Counsel, in his or her sole discretion, grants your request in accordance with the law and the public interest.

Postal mail addressed to the Commission is subject to delay due to heightened security screening. As a result, we encourage you to submit your comments online. To make sure that the Commission considers your online comment, you must file it at *http://ftcpublic.commentworks.com/ftc/admongoevaluationpra,* by following the instructions on the web-based form. If this Notice appears at *http://www.regulations.gov/#!home,* you also may file a comment through that Web site.

If you file your comment on paper, write ''Admongo Evaluation, FTC File No. P085200'' on your comment and on the envelope, and mail or deliver it to the following address: Federal Trade Commission, Office of the Secretary, Room H–113 (Annex J), 600 Pennsylvania Avenue NW., Washington, DC 20580. If possible, submit your paper comment to the Commission by courier or overnight service.

Visit the Commission Web site at *http://www.ftc.gov* to read this Notice and the news release describing it. The FTC Act and other laws that the Commission administers permit the collection of public comments to consider and use in this proceeding as appropriate. The Commission will consider all timely and responsive public comments that it receives on or before January 31, 2012. You can find more information, including routine uses permitted by the Privacy Act, in the Commission's privacy policy, at *http://www.ftc.gov/ftc/privacy.htm.*

By direction of the Commission.

Donald S. Clark,

Secretary.

[FR Doc. 2011–30960 Filed 12–1–11; 8:45 am]

BILLING CODE 6750–01–P

[7] In particular, the written request for confidential treatment that accompanies the comment must include the factual and legal basis for the request, and must identify the specific portions of the comment to be withheld from the public record. *See* FTC Rule 4.9(c), 16 CFR 4.9(c).

DEPARTMENT OF HEALTH AND HUMAN SERVICES

Food and Drug Administration

[Docket No. FDA–2011–D–0800]

Draft Guidance for Industry on Regulatory Classification of Pharmaceutical Co-Crystals; Availability

AGENCY: Food and Drug Administration, HHS.

ACTION: Notice.

SUMMARY: The Food and Drug Administration (FDA) is announcing the availability of a draft guidance for industry entitled ''Regulatory Classification of Pharmaceutical Co-Crystals.'' This draft guidance provides applicants of new drug applications (NDAs) and abbreviated new drug applications (ANDAs) with the Center for Drug Evaluation and Research's (CDER's) current thinking on the appropriate classification of co-crystal solid-state forms. This draft guidance also provides information about the data that should be submitted to support the appropriate classification of a co-crystal and the regulatory implications of the classification.

DATES: Although you can comment on any guidance at any time (see 21 CFR 10.115(g)(5)), to ensure that the Agency considers your comment on this draft guidance before it begins work on the final version of the guidance, submit either electronic or written comments on the draft guidance by March 1, 2012.

ADDRESSES: Submit written requests for single copies of the draft guidance to the Division of Drug Information, Center for Drug Evaluation and Research, Food and Drug Administration, 10903 New Hampshire Ave., Bldg. 51, rm. 2201, Silver Spring, MD 20993–0002. Send one self-addressed adhesive label to assist that office in processing your requests. See the **SUPPLEMENTARY INFORMATION** section for electronic access to the draft guidance document.

Submit electronic comments on the draft guidance to *http://www.regulations.gov.* Submit written comments to the Division of Dockets Management (HFA–305), Food and Drug Administration, 5630 Fishers Lane, rm. 1061, Rockville, MD 20852.

FOR FURTHER INFORMATION CONTACT: Andre Raw, Center for Drug Evaluation and Research, Food and Drug Administration, Metro Park North II, 7500 Standish Pl., Rockville, MD 20855, (240) 276–8500; or Richard Lostritto, Center for Drug Evaluation and Research, Food and Drug Administration, Bldg. 21, rm. 1626, 10903 New Hampshire Ave., Silver Spring, MD 20993, (301) 796–1900.

SUPPLEMENTARY INFORMATION:

I. Background

FDA is announcing the availability of a draft guidance for industry entitled ''Regulatory Classification of Pharmaceutical Co-Crystals.'' This draft guidance provides applicants of NDAs and ANDAs with CDER's current thinking on the appropriate classification of co-crystal solid-state forms. This draft guidance also provides information about the data that should be submitted to support the appropriate classification of a co-crystal and the regulatory implications of the classification.

Co-crystals are solids that are crystalline materials composed of two or more molecules in the same crystal lattice. These solid-state forms, composed of an active pharmaceutical ingredient (API) with a neutral guest compound co-former, have been the focus of significant interest in drug product development. Pharmaceutical co-crystals have opened the opportunity for engineering solid-state forms designed to have tailored properties to enhance drug product bioavailability and stability, as well as enhance processability of the solid material inputs in drug product manufacture. Pharmaceutical co-crystals are of interest because, unlike a salt form where the components in the crystal lattice are in an ionized state, the molecules in the co-crystal are in a neutral state and interact via nonionic interactions. Thus, pharmaceutical co-crystals offer the advantage of generating a diverse array of solid-state forms, even for APIs that lack ionizable functional groups needed for salt formation.

Traditionally, pharmaceutical solid-state forms of an API are grouped as either polymorphs or salts, and applicable regulatory schemes for these solid-state forms are well-defined. Co-crystals, however, are distinguishable from these traditional pharmaceutical solid-state forms. Unlike polymorphs, which generally speaking contain only the API within the crystal lattice, co-crystals are composed of an API with a neutral guest compound conformer in the crystal lattice. Similarly, unlike salts, where the components in the crystal lattice are in an ionized state, a co-crystal's components are in a neutral state and interact via nonionic interactions.

At present, no regulatory paradigm exists governing co-crystal forms. In response to this need for regulatory

guidance, the draft guidance provides the Agency's current thinking on the appropriate classification of co-crystal solid-state forms.

This draft guidance is being issued consistent with FDA's good guidance practices regulation (21 CFR 10.115). The draft guidance, when finalized, will represent the Agency's current thinking on regulatory classification of pharmaceutical co-crystals. It does not create or confer any rights for or on any person and does not operate to bind FDA or the public. An alternative approach may be used if such approach satisfies the requirements of the applicable statutes and regulations.

II. Comments

Interested persons may submit to the Division of Dockets Management (see **ADDRESSES**) either electronic or written comments regarding this document. It is only necessary to send one set of comments. It is no longer necessary to send two copies of mailed comments. Identify comments with the docket number found in brackets in the heading of this document. Received comments may be seen in the Division of Dockets Management between 9 a.m. and 4 p.m., Monday through Friday.

III. The Paperwork Reduction Act of 1995

This draft guidance refers to previously approved collections of information found in FDA regulations. This draft guidance refers to information collection provisions that are subject to review by the Office of Management and Budget (OMB) under the Paperwork Reduction Act of 1995 (44 U.S.C. 3501–3520). The collections of information in 21 CFR 314.50(d)(1) and 314.94(a)(5) and 314.94(a)(9) have been approved under OMB control number 0910–0001.

IV. Electronic Access

Persons with access to the Internet may obtain the document at either *http://www.fda.gov/Drugs/GuidanceComplianceRegulatoryInformation/Guidances/default.htm* or *http://www.regulations.gov.*

Dated: November 29, 2011.

Leslie Kux,

Acting Assistant Commissioner for Policy.

[FR Doc. 2011–31022 Filed 12–1–11; 8:45 am]

BILLING CODE 4160–01–P

DEPARTMENT OF HEALTH AND HUMAN SERVICES

National Institutes of Health

Center for Scientific Review; Notice of Closed Meeting

Pursuant to section 10(d) of the Federal Advisory Committee Act, as amended (5 U.S.C. App.), notice is hereby given of the following meeting.

The meeting will be closed to the public in accordance with the provisions set forth in sections 552b(c)(4) and 552b(c)(6), Title 5 U.S.C., as amended. The grant applications and the discussions could disclose confidential trade secrets or commercial property such as patentable material, and personal information concerning individuals associated with the grant applications, the disclosure of which would constitute a clearly unwarranted invasion of personal privacy.

Name of Committee: Center for Scientific Review Special Emphasis Panel, Member Conflicts in Child and Adolescent Psychopathology.

Date: December 20, 2011.

Time: 2 p.m. to 4 p.m.

Agenda: To review and evaluate grant applications.

Place: National Institutes of Health, 6701 Rockledge Drive, Bethesda, MD 20892, (Virtual Meeting).

Contact Person: Dana Jeffrey Plude, Ph.D., Scientific Review Officer, Center for Scientific Review, National Institutes of Health, 6701 Rockledge Drive, Room 3176, MSC 7848, Bethesda, MD 20892, (301) 435–2309, *pluded@csr.nih.gov.*

(Catalogue of Federal Domestic Assistance Program Nos. 93.306, Comparative Medicine; 93.333, Clinical Research, 93.306, 93.333, 93.337, 93.393–93.396, 93.837–93.844, 93.846–93.878, 93.892, 93.893, National Institutes of Health, HHS)

Dated: November 28, 2011.

Jennifer S. Spaeth,

Director, Office of Federal Advisory Committee Policy.

[FR Doc. 2011–31048 Filed 12–1–11; 8:45 am]

BILLING CODE 4140–01–P

DEPARTMENT OF HEALTH AND HUMAN SERVICES

National Institutes of Health

Center for Scientific Review; Notice of Closed Meetings

Pursuant to section 10(d) of the Federal Advisory Committee Act, as amended (5 U.S.C. App.), notice is hereby given of the following meetings.

The meetings will be closed to the public in accordance with the provisions set forth in sections 552b(c)(4) and 552b(c)(6), Title 5 U.S.C., as amended. The grant applications and the discussions could disclose confidential trade secrets or commercial property such as patentable material, and personal information concerning individuals associated with the grant applications, the disclosure of which would constitute a clearly unwarranted invasion of personal privacy.

Name of Committee: Center for Scientific Review Special Emphasis Panel, PAR10–238 ACCORD Ancillary Studies.

Date: December 14–15, 2011.

Time: 9 a.m. to 6 p.m.

Agenda: To review and evaluate grant applications.

Place: National Institutes of Health, 6701 Rockledge Drive, Bethesda, MD 20892, (Virtual Meeting).

Contact Person: Russell T. Dowell, Ph.D., Scientific Review Officer, Center for Scientific Review, National Institutes of Health, 6701 Rockledge Drive, Room 4128, MSC 7814, Bethesda, MD 20892, (301) 435–1850, *dowellr@csr.nih.gov.*

Name of Committee: Center for Scientific Review Special Emphasis Panel, Inflammation, Osteoarthritis and Rheumatoid Arthritis.

Date: December 19, 2011.

Time: 1 p.m. to 3 p.m.

Agenda: To review and evaluate grant applications.

Place: National Institutes of Health, 6701 Rockledge Drive, Bethesda, MD 20892, (Telephone Conference Call).

Contact Person: Priscilla B. Chen, Ph.D., Scientific Review Officer, Center for Scientific Review, National Institutes of Health, 6701 Rockledge Drive, Room 4104, MSC 7814, Bethesda, MD 20892, (301) 435–1787, *chenp@csr.nih.gov.*

(Catalogue of Federal Domestic Assistance Program Nos. 93.306, Comparative Medicine; 93.333, Clinical Research, 93.306, 93.333, 93.337, 93.393–93.396, 93.837–93.844, 93.846–93.878, 93.892, 93.893, National Institutes of Health, HHS)

Dated: November 25, 2011

Jennifer S. Spaeth,

Director, Office of Federal Advisory Committee Policy.

[FR Doc. 2011–31049 Filed 12–1–11; 8:45 am]

BILLING CODE 4140–01–P

DEPARTMENT OF HEALTH AND HUMAN SERVICES

National Institutes of Health

National Institute of Allergy and Infectious Diseases; Notice of Closed Meetings

Pursuant to section 10(d) of the Federal Advisory Committee Act, as amended (5 U.S.C. App.), notice is hereby given of the following meetings.

The meetings will be closed to the public in accordance with the

provisions set forth in sections 552b(c)(4) and 552b(c)(6), Title 5 U.S.C., as amended. The grant applications and the discussions could disclose confidential trade secrets or commercial property such as patentable material, and personal information concerning individuals associated with the grant applications, the disclosure of which would constitute a clearly unwarranted invasion of personal privacy.

Name of Committee: National Institute of Allergy and Infectious Diseases Special Emphasis Panel, NIAID Investigator Initiated Program Project Application.

Date: December 20, 2011.

Time: 10 a.m. to 1:30 p.m.

Agenda: To review and evaluate grant applications.

Place: National Institutes of Health, Rockledge 6700, 6700B Rockledge Drive, Bethesda, MD 20817, (Telephone Conference Call).

Contact Person: Quirijn Vos, PhD, Scientific Review Officer, Scientific Review Program, Division of Extramural Activities, DHHS/NIH/NIAID, 6700B Rockledge Drive, MSC 7616, Bethesda, MD 20892, (301) 451–2666, *qvos@niaid.nih.gov.*

Name of Committee: National Institute of Allergy and Infectious Diseases Special Emphasis Panel, NIAID Investigator Initiated Program Project Application.

Date: December 21, 2011.

Time: 1:30 p.m. to 4:30 p.m.

Agenda: To review and evaluate grant applications.

Place: National Institutes of Health, 6700B Rockledge Drive, Bethesda, MD 20817, (Telephone Conference Call).

Contact Person: Quirijn Vos, PhD, Scientific Review Officer, Scientific Review Program, Division of Extramural Activities, DHHS/NIH/NIAID, 6700B Rockledge Drive, MSC 7616, Bethesda, MD 20892, (301) 451–2666, *qvos@niaid.nih.gov.*

(Catalogue of Federal Domestic Assistance Program Nos. 93.855, Allergy, Immunology, and Transplantation Research; 93.856, Microbiology and Infectious Diseases Research, National Institutes of Health, HHS)

Dated: November 28, 2011.

Jennifer S. Spaeth,

Director, Office of Federal Advisory Committee Policy.

[FR Doc. 2011–31055 Filed 12–1–11; 8:45 am]

BILLING CODE 4140–01–P

DEPARTMENT OF HEALTH AND HUMAN SERVICES

National Institutes of Health

National Institute of Diabetes and Digestive and Kidney Diseases; Notice of Closed Meeting

Pursuant to section 10(d) of the Federal Advisory Committee Act, as amended (5 U.S.C. App.), notice is hereby given of the following meeting.

The meeting will be closed to the public in accordance with the provisions set forth in sections 552b(c)(4) and 552b(c)(6), Title 5 U.S.C., as amended. The grant applications and the discussions could disclose confidential trade secrets or commercial property such as patentable material, and personal information concerning individuals associated with the grant applications, the disclosure of which would constitute a clearly unwarranted invasion of personal privacy.

Name of Committee: National Institute of Diabetes and Digestive and Kidney Diseases Special Emphasis Panel, Diabetes, Endocrinology, and Metabolism Career Awards.

Date: December 20, 2011.

Time: 3 p.m. to 4:30 p.m.

Agenda: To review and evaluate grant applications.

Place: National Institutes of Health, Two Democracy Plaza, 6707 Democracy Boulevard, Bethesda, MD 20892, (Telephone Conference Call).

Contact Person: Carol J. Goter-Robinson, Ph.D., Scientific Review Officer, Review Branch, DEA, NIDDK, National Institutes of Health, Room 748, 6707 Democracy Boulevard, Bethesda, MD 20892–5452, (301) 594–7791, *goterrobinsonc@extra.niddk.nih.gov.*

This notice is being published less than 15 days prior to the meeting due to the timing limitations imposed by the review and funding cycle.

(Catalogue of Federal Domestic Assistance Program Nos. 93.847, Diabetes, Endocrinology and Metabolic Research; 93.848, Digestive Diseases and Nutrition Research; 93.849, Kidney Diseases, Urology and Hematology Research, National Institutes of Health, HHS)

Dated: November 25, 2011.

Jennifer S. Spaeth,

Director, Office of Federal Advisory Committee Policy.

[FR Doc. 2011–31050 Filed 12–1–11; 8:45 am]

BILLING CODE 4140–01–P

DEPARTMENT OF HOMELAND SECURITY

U.S. Customs and Border Protection

Completion of the Broker Self-Assessment Outreach Pilot

AGENCY: U.S. Customs and Border Protection, Department of Homeland Security.

ACTION: General notice.

SUMMARY: This document announces the completion of the Broker Self-Assessment (BSA) Outreach Pilot (BSA Pilot), a voluntary partnership with the customs brokerage community, which began in July 2009. CBP has decided to end the BSA pilot without a plan to proceed with another Importer Self-Assessment type model. CBP and the National Customs Brokers and Forwarders Association of America (NCBFAA) have agreed to pursue other avenues to collaborate pertaining to trade modernization efforts.

DATES: *Effective Date:* December 2, 2011.

FOR FURTHER INFORMATION CONTACT: Florence Constant, Partnership Programs Branch, Trade Policy and Programs, Office of International Trade, Tel.: (202) 863–6537.

SUPPLEMENTARY INFORMATION:

Background

This document announces the completion of the Broker Self-Assessment Outreach Pilot (BSA Pilot), which began July 2009 after its announcement in the **Federal Register** (74 FR 19103) on April 27, 2009. The pilot was a collaborative effort by U.S. Customs and Border Protection (CBP) and the National Customs Brokers and Forwarders Association of America (NCBFAA) to develop a voluntary partnership between CBP and the customs brokerage community.

Purpose

The purpose of the partnership was to facilitate a higher level of broker compliance with CBP laws and regulations, specifically those in part 111 of title 19 of the Code of Federal Regulations (19 CFR part 111), so that the agency could focus on higher-risk trade enforcement issues. All brokers who were current members of the Customs-Trade Partnership Against Terrorism (C–TPAT) were permitted to apply for the BSA pilot by signing a BSA Memorandum of Understanding (MOU) and completing a BSA questionnaire.

A total of twenty-seven (27) brokers applied and four (4) were selected to participate in the pilot based on the criteria discussed above and CBP and NCBFAA's desire to have brokerages that represented small, medium, and large volumes of activities.

Pilot Design

CBP and NCBFAA modeled the pilot after the existing Importer Self-Assessment (ISA) program, which is based on the premise that importers with internal controls in place achieve the highest level of compliance with CBP laws and regulations. Similarly, the premise with the BSA pilot was that brokers with strong internal controls would achieve the highest level of compliance with customs laws and regulations.

The pilot program was designed to allow customs brokers to voluntarily provide CBP with internal control procedures designed to ensure their compliance with broker requirements such as annual summary reports from periodic compliance evaluations and risk assessments. CBP provided the participants with recognition and support, in the form of consultations and general assistance.

The BSA team, which was comprised of CBP regulatory auditors and national account managers, gathered and analyzed the data provided by the participants to determine whether: (1) The resources expended by brokers were commensurate with the potential gains to CBP and the broker; (2) there were mutual benefits for CBP and the broker that would make the program attractive; and (3) the intent of the pilot was realized through the pilot design utilized. In making its assessment, the BSA team examined the brokers' processing of its clients' submissions in the following areas: periodic monthly statement; bonded warehouse; importer security filings; remote location filing; and drawback.

Pilot Results

CBP's assessment of the pilot results showed that the participants successfully demonstrated their supervision and control over customs transactions and documented their internal controls over their customs operations. However, the procedures for the internal controls, such as supervision and control over customs transactions and customs operations, were not always written, and in some cases, the procedures were modified or improved, but not yet implemented. The pilot also disclosed that the broker's assessment of risk factors differed from the risk factors CBP identified as potentially significant risks.

All of the participants agreed that the BSA pilot helped them identify some areas of risk that they had not previously considered. Most of the participants concluded that the development of the internal control procedures revealed ways to better manage and mitigate risk factors.

The reliable quantitative measure related to import transactions is the compliance measurement rate, which primarily measures compliance in areas such as, classification, valuation, free trade agreement, anti-dumping and countervailing duty. It was discovered in the BSA Pilot that the compliance measurement rate did not necessarily correlate with demonstrated compliance on the part of the broker.

The BSA evaluation team's assessment of the broker's internal control for achieving compliance with the CBP regulations (19 CFR part 111) concluded that the participants demonstrated a strong commitment to ensuring compliance, professional ethics and professional development of their employees to meet its overall objective in regards to broker oversight and management controls. Moreover, the participants generally provided exemplary documentation to support their processes, which validated the assertions made as to the significant resources allocated in preparation for the team's assessment. The NCBFAA observed that the BSA pilot demonstrated that business profiles and process management within the brokerage community is highly diverse. As such, it would be difficult to provide for a standard template that CBP could use to establish uniform methodology for compliance verification. NCBFAA recommended that CBP not pursue the BSA pilot as it is currently designed.

Since CBP has decided to end the BSA pilot without a plan to proceed with another Importer Self-Assessment type model, CBP and NCBFAA will pursue other avenues to collaborate pertaining to trade modernization efforts.

The complete March 1, 2011 ''Broker Self-Assessment Outreach Pilot'' Report is available on the following Web site: *http://www.cbp.gov/linkhandler/cgov/trade/trade_programs/bsa/bsa_report.ctt/bsa_report.pdf.*

Dated: November 29, 2011.

Allen Gina,

Assistant Commissioner, Office of International Trade.

[FR Doc. 2011–31009 Filed 12–1–11; 8:45 am]

BILLING CODE 9111–14–P

DEPARTMENT OF HOUSING AND URBAN DEVELOPMENT

[Docket No. FR–5477–N–48]

Federal Property Suitable as Facilities to Assist the Homeless

AGENCY: Office of the Assistant Secretary for Community Planning and Development, HUD.

ACTION: Notice.

SUMMARY: This Notice identifies unutilized, underutilized, excess, and surplus Federal property reviewed by HUD for suitability for possible use to assist the homeless.

FOR FURTHER INFORMATION CONTACT: Juanita Perry, Department of Housing and Urban Development, 451 Seventh Street SW., Room 7262, Washington, DC 20410; telephone (202) 708–1234; TTY number for the hearing- and speech-impaired (202) 708–2565, (these telephone numbers are not toll-free), or call the toll-free Title V information line at (800) 927–7588.

SUPPLEMENTARY INFORMATION: In accordance with the December 12, 1988 court order in *National Coalition for the Homeless* v. *Veterans Administration,* No. 88–2503–OG (D.D.C.), HUD publishes a Notice, on a weekly basis, identifying unutilized, underutilized, excess and surplus Federal buildings and real property that HUD has reviewed for suitability for use to assist the homeless. Today's Notice is for the purpose of announcing that no additional properties have been determined suitable or unsuitable this week.

Dated November 24, 2011.

Mark R. Johnston,

Deputy Assistant Secretary for Special Needs.

[FR Doc. 2011–30835 Filed 12–1–11; 8:45 am]

BILLING CODE 4210–67–P

DEPARTMENT OF THE INTERIOR

Bureau of Land Management

[LLNVB01000 L51100000.GN0000.LVEMF09CF010; NVN–082096; NVN–084632; 12–08807; MO#: 4500027396; TAS: 14X5017]

Notice of Availability of the Draft Environmental Impact Statement for the Mount Hope Project, Eureka County, NV

AGENCY: Bureau of Land Management, Interior.

ACTION: Notice of availability.

SUMMARY: In accordance with the National Environmental Policy Act of 1969, as amended (NEPA), the Bureau of Land Management (BLM) has prepared a Draft Environmental Impact Statement (EIS) for the Mount Hope Project and by this notice is announcing the opening of the comment period.

DATES: To ensure comments will be considered, the BLM must receive written comments on the Mount Hope Project Draft EIS within 90 days following the date the Environmental Protection Agency publishes its Notice of Availability in the **Federal Register.** The BLM will announce future meetings or hearings and any other public involvement activities at least 15 days in advance through public notices, media releases, Web site postings, and/or mailings.

ADDRESSES: You may submit comments related to the Mount Hope Project by any of the following methods:

- *Web site: http://www.blm.gov/nv/st/en/fo/battle_mountain_field.html.*
- *Email: mhmm_project@blm.gov.*
- *Fax:* (775) 635–4034, Attention: Angelica Rose, Mt. Hope Project.
- *Mail:* BLM Battle Mountain District Office, 50 Bastian Road, Battle Mountain, NV 89820 Attn: Angelica Rose, Mt. Hope Project.

Copies of the Mount Hope Project Draft EIS are available at the Battle Mountain District Office at the above address, and on the Battle Mountain District's NEPA Web site at: *http://www.blm.gov/nv/st/en/fo/battle_mountain_field/blm_information/national_environmental.html.*

FOR FURTHER INFORMATION CONTACT: Angelica Rose, Planning and Environmental Coordinator, *telephone:* (775) 635–4000; *address:* 50 Bastian Road, Battle Mountain, NV 89820; *email: mhmm_project@blm.gov.* Persons who use a telecommunications device for the deaf (TDD) may call the Federal Information Relay Service (FIRS) at 1–(800) 877–8339 to contact the above individual during normal business hours. The FIRS is available 24 hours a day, 7 days a week, to leave a message or question with the above individual. You will receive a reply during normal business hours.

SUPPLEMENTARY INFORMATION: Eureka Moly, LLC, (EML) has submitted a Plan of Operations (NVN–082096) to the BLM for the proposed Mount Hope Molybdenum Mining Project (project). The proposed project would be located in central Nevada approximately 23 miles northwest of Eureka, Nevada. The proposed project includes a power transmission line, a water well field, and associated mine-processing facilities. The project would be located on both public and private lands in Eureka County, Nevada. The surface disturbance associated with the proposed activities totals 8,318 acres, of which 8,056 acres are on public land and 262 acres are on private land. This proposed project would consist of the following primary components: an open pit with associated pit dewatering; two waste rock disposal facilities; milling facilities; a molybdenite concentrate roaster and packaging plant; a ferromolybdenum plant for production of ferromolybdenum alloy using a metallothermic process and a separate packaging plant for drums and bags; two tailings storage facilities; an ongoing exploration program; low-grade ore stockpile; water supply in the Kobeh Valley Well Field Area; a 24-mile long, 230-kilovolt electric power supply line from the existing Machacek substation, with a substation and distribution system. Ancillary facilities would include: haul, secondary, and exploration roads; a ready line; warehouse and maintenance facilities; storm water diversions; sediment control basins; pipeline corridors; reagent and diesel storage; storage and laydown yards; ammonium nitrate silos; explosives magazines; fresh and fire water storage and a process water storage pond; monitoring wells; an administration building; a security and first aid building; a helipad; a laboratory; growth media and cover stockpiles; borrow areas; mine power loop; communications equipment; hazardous waste management facilities; a Class III waivered landfill; an area to store and treat petroleum contaminated soils; and turn lanes on State Route 278.

The estimated 80-year project would have an 18-month construction phase and mine life of 32 years, which is concurrent with an ore processing timeline of 44 years, followed by 30 years of reclamation and 5 years of post-reclamation monitoring. Concurrent reclamation would not commence until after the first 15 years of the project. The Mount Hope ore body contains approximately 966 million tons of molybdenite (molybdenum disulfide) ore that would produce approximately 1.1 billion pounds of recoverable molybdenum during the ore-processing time frame. Approximately 1.7 billion tons of waste rock would be produced by the end of the 32-year mine life and approximately 1 billion tons of tailings would be produced by the end of the 44 years of ore processing. Optimal development of the molybdenum deposit, to meet the market conditions and maximize molybdenum production, would utilize an open-pit mining method and would process the mined ore using a flotation and roasting process.

The Draft EIS describes and analyzes the proposed project's site-specific impacts, including cumulative impacts, on all affected resources. Four action alternatives, including the Proposed Action as described above, were analyzed in addition to the No Action Alternative. Eight alternatives were considered but eliminated from further analysis. Based on the analysis in the Draft EIS, the BLM has determined that the Preferred Alternative is the approval of the Proposed Action, with accompanying mitigation measures.

On March 2, 2007, a Notice of Intent was published in the **Federal Register** (E7–3643) inviting scoping comments on the proposed project and a news release was published in three northern Nevada newspapers. Two public scoping meetings for the project were held: March 27, 2007 in Eureka, Nevada, attended by five members of the public with no written comments submitted; and March 28, 2007 in Battle Mountain, Nevada, attended by 30 members of public with one written comment submitted. Five additional comment letters were received during the scoping period and three letters were received after the end of the scoping period. All comments received have been incorporated in a Scoping Summary Report and have been considered in preparation of the Draft EIS.

Concerns raised during scoping include the length of time for mining operations and reclamation, and access to private lands. Potential impacts were identified to the Pony Express National Historic Trail, wildlife, migratory birds, special status species, threatened and endangered species (including sage-grouse and Lahontan cutthroat trout), wild horses, hydrology resources (related to water quality and quantity), water rights holders, wetlands, air quality, livestock grazing (relating to forage and water availability and reductions in AUMs), socioeconomic impacts on the community, visual resources; Native American traditional values, impacts to cultural resources, waste management, and reclamation. Financial concerns were raised relating to accountability of operators, bonding requirements, and the establishment of a long-term trust fund. These concerns were addressed in the Draft EIS to the extent practicable.

Please note that public comments and information submitted, including names, street addresses, and email addresses of persons who submit comments will be available for public review and disclosure at the above address during regular business hours (8 a.m. to 4 p.m.), Monday through Friday, except holidays.

Before including your address, phone number, email address, or other personal identifying information in your comment, you should be aware that your entire comment—including your personal identifying information—may be made publicly available at any time. While you can ask us in your comment to withhold your personal identifying information from public review, we cannot guarantee that we will be able to do so.

Authority: 40 CFR 1506.6, 40 CFR 1506.10.

Christopher J. Cook,

Mount Lewis Field Manager.

[FR Doc. 2011–30926 Filed 12–1–11; 8:45 am]

BILLING CODE 4310–HC–P

DEPARTMENT OF THE INTERIOR

Bureau of Land Management

[LLNMF02000 L16100000.DP0000 LXSS026G0000]

Notice of Availability of the Proposed Resource Management Plan and Final Environmental Impact Statement for the Taos Field Office, New Mexico

AGENCY: Bureau of Land Management, Interior.

ACTION: Notice of availability.

SUMMARY: In accordance with the National Environmental Policy Act (NEPA) of 1969, as amended, and the Federal Land Policy and Management Act of 1976, as amended, the Bureau of Land Management (BLM) has prepared the Proposed Resource Management Plan/Final Environmental Impact Statement (Proposed RMP/Final EIS) for the Taos Field Office, New Mexico, and by this Notice is announcing its availability.

DATES: The BLM planning regulations state that any person who meets the conditions as described in the regulations may protest the Proposed RMP/Final EIS. A person who meets the conditions must file the protest within 30 days of the date that the Environmental Protection Agency publishes this Notice in the **Federal Register.**

ADDRESSES: Copies of the Proposed RMP/Final EIS have been sent to affected Federal, Tribal, state, and local government agencies and to other stakeholders. Copies of the Proposed RMP/Final EIS are available for public inspection at the Taos Field Office in Taos, New Mexico, and New Mexico State Office in Santa Fe, New Mexico. Interested persons may also review the Proposed RMP/Final EIS at: *http://www.blm.gov/nm/st/en/fo/Taos_Field_Office/taos_rmpr.html.* All protests must be in writing and mailed to one of the following addresses:

Regular mail	Overnight mail
BLM Director (210), Attention: Brenda Williams, P.O. Box 71383, Washington, DC 20024–1383.	BLM Director (210), Attention: Brenda Williams, 20 M Street SE., Room 2134LM, Washington, DC 20003.

FOR FURTHER INFORMATION CONTACT: Brad Higdon, Planning and Environmental Coordinator, Taos Field Office, telephone (575) 751–4725; address 226 Cruz Alta Road, Taos, New Mexico 87571; email *bhigdon@blm.gov.* Persons who use a telecommunications device for the deaf (TDD) may call the Federal Information Relay Service (FIRS) at 1–(800) 877–8339 to contact the above individuals during normal business hours. The FIRS is available 24 hours a day, 7 days a week, to leave a message or question with the above individuals. You will receive a reply during normal business hours.

SUPPLEMENTARY INFORMATION: The Proposed RMP/Final EIS analyzes the environmental consequences of four alternative land use plans under consideration by the BLM for managing approximately 595,100 acres of surface estate and 1.5 million acres of mineral estate administered by the Taos Field Office within Colfax, Harding, Los Alamos, Mora, Rio Arriba, Santa Fe, Taos, San Miguel, and Union Counties in northern New Mexico. This land use plan would replace the 1988 Taos RMP, as amended, and approval thereof is needed to provide updated management decisions regarding land tenure adjustments, land use authorizations, mineral resources, recreation, renewable energy, special designations, transportation and access, visual resources, and other resource uses and considerations. Upon approval, the Proposed RMP/Final EIS will apply only to BLM-administered public lands and Federal mineral estate. The four alternatives analyzed in detail in the Proposed RMP/Final EIS are the No Action Alternative, or a continuation of the existing management decisions; Alternative A, the Proposed RMP, which strives to balance resource uses with protections; Alternative B, which emphasizes resource conservation and protection; and Alternative C, which allows greater opportunity for resource use and development.

The Proposed RMP/Final EIS would establish eleven Areas of Critical Environmental Concern, totaling approximately 407,855 acres, to provide special management for the protection of relevant and important cultural, historic, scenic, and natural resource values. The proposed plan would also apply protective management to approximately 67,032 acres of lands with wilderness characteristics in four different areas. Public lands available for renewable energy development, mineral development, land use authorization, systems of designated travel routes, and other uses would be provided for under the proposed plan, which would delineate and, as necessary, apply limitations on these opportunities. In addition, management parameters and prescriptions would be applied to a variety of natural, cultural, and visual resources, including air and water quality, wildlife habitat, forests and woodlands, and other components of the biological, physical, and cultural environment.

The land use planning process was initiated on May 26, 2006, through a Notice of Intent published in the **Federal Register** (71 FR 30446). A Notice of Availability of the Draft RMP/Draft EIS was published on June 10, 2010, in the **Federal Register** (75 FR 32963) to announce a 90-day public review and comment period of the draft document. During that period, the BLM held public open-house meetings in Santa Fe, Española, and Taos to assist the public in their review of the Draft and to solicit their comments. The Draft RMP/EIS was sent to multiple Federal, Tribal, State, and local government agencies and interested parties and was made publicly available for viewing at the Taos Field Office, the New Mexico State Office, and on the Internet. During the comment period, the Taos Field Office received approximately 94 comments from comment forms, which were completed during one of the public open-house meetings, comment letters, or emails.

Each submission was carefully reviewed to identify substantive comments in accordance with regulations on the implementation of NEPA (40 CFR 1503.4). Comments received from the public were considered and incorporated upon internal BLM reviews as appropriate into the Proposed RMP/Final EIS. Public comments resulted in the addition of clarifying text, but did not significantly change the proposed land use plan decisions. Instructions for filing a protest with the Director of the BLM regarding the proposed plan may be found in the ''Dear Reader Letter'' of the Proposed RMP/Final EIS and at 43 CFR 1610.5–2. Emailed and faxed protests will not be accepted as valid protests unless the protesting party also provides the original letter by either regular or overnight mail postmarked by the close of the protest period. Under these conditions, the BLM will consider the emailed or faxed protest as an advance copy and it will receive full consideration. If you wish to provide the BLM with such advanced notification, please send protests to fax phone number (202) 912–7212, attention BLM Protest Coordinator Brenda Hudgens-Williams or email *Brenda_Hudgens-Williams@blm.gov.*

All protests, including the follow-up letter to emails or faxes, must be in writing and mailed to the appropriate address, as set forth in the **ADDRESSES** section above.

Before including your phone number, email address, or other personal identifying information in your protest, you should be aware that your entire protest—including your personal identifying information—may be made publicly available at any time. While you can ask us in your protest to withhold your personal identifying information from public review, we cannot guarantee that we will be able to do so.

Jesse Juen,

Acting State Director.

Authority: 40 CFR 1506.6; 40 CFR 1506.10; 43 CFR 1610.2; 43 CFR 1610.5–2.

[FR Doc. 2011–30929 Filed 12–1–11; 8:45 am]

BILLING CODE 4310–OW–P

DEPARTMENT OF THE INTERIOR

National Park Service

[NPS–PWR–PWRO–0928–8539; 9082–H921–409]

Draft Environmental Impact Statement for General Management Plan/ Wilderness Study, Hawaii Volcanoes National Park, Hawaii

AGENCY: National Park Service, Interior.

ACTION: Notice of intent.

SUMMARY: The National Park Service is expanding the scope of the Environmental Impact Statement (EIS) that is being prepared for updating the General Management Plan (GMP) for Hawaii Volcanoes National Park. As part of this conservation planning and environmental impact analysis effort, the Draft EIS will include a wilderness study to determine if any additional portions of the park should be recommended for inclusion in the National Wilderness Preservation System (currently the park contains 130,790 acres of Congressionally designated Wilderness).

SUPPLEMENTARY INFORMATION: This Notice supplements and updates the original Notice of Intent (published in **Federal Register** on April 13, 2009) which formally announced initiation of the GMP update effort. The scope of the EIS is expanded to include an evaluation of foreseeable effects associated with possible designation of additional wilderness within Hawaii Volcanoes National Park. The new GMP will establish the overall direction for the park, setting broad management goals for managing the area over the next 15 to 20 years. The GMP will prescribe desired resource conditions and visitor experiences that are to be achieved and maintained throughout the park. Based on the desired conditions, the GMP will outline what resource management and visitor activities, and what limited development, would be appropriate in the park. Among the topics that have been addressed thus far are preservation and protection of native ecosystems and the park's natural and cultural resources; significance of park resources to Native Hawaiian culture; visitor experiences including use of facilities and participation in activities and programs; access to lava for visitors and researchers; current wilderness management issues; transportation, roads and parking; commercial services and special park uses; park operations, partnerships, and collaboration; and the future of the Kahuku Unit. A reasonable range of alternatives for managing the park, including ''no-action'' and ''agency preferred'' alternatives will be developed through the planning process and analyzed in the EIS. The EIS will evaluate the potential environmental impacts of all alternatives, address appropriate mitigation strategies, and identify an ''environmentally preferred'' alternative.

Comments: To facilitate sound planning and analysis of foreseeable environmental effects, Hawaii Volcanoes National Park is gathering additional information relevant to preparing the Draft EIS. The park is also soliciting suggestions from the public on issues that should be addressed in the wilderness study, and comments on the range of preliminary GMP alternatives under consideration. In concert with local, state, Tribal, and other federal agencies, consideration will also be made for cooperative management of resources outside park boundaries that affect the integrity of the park. Thoughtful comments and participation in this scoping process are desired. You are encouraged to submit your comments directly online through the NPS Planning, Environment and Public Comment Web site at: *http://parkplanning.nps.gov/havo* (select the GMP/Wilderness Study from the list of projects). Or if you prefer to do so, you may send written responses to: Cindy Orlando, Superintendent, Attn: General Management Planning Team, Hawaii Volcanoes National Park, P.O. Box 52, Hawaii National Park, HI 96718–0052.

All written comments on the GMP/ Wilderness Study must be postmarked, hand delivered, or electronically transmitted not later than January 3, 2012. Immediately upon confirmation of this date an update will be posted on the project Web site. Before including your address, phone number, email address, or other personal identifying information in your comment, you should be aware that your entire comment—including your personal identifying information—may be made publicly available at any time. While you can ask us in your comment to withhold your personal identifying information from public review, we cannot guarantee that we will be able to do so.

In April 2009, seven public scoping sessions were held on the island of Hawaii (including Volcano, Hilo, Naalehu, Kailua-Kona), on Oahu (Honolulu), and on Maui (Kahului). Additional meetings were held in August 2011 to provide a planning update that presented preliminary alternatives and addressed what would be considered in the wilderness study component. All persons who previously submitted comments during the initial GMP scoping process need not resubmit their comments. However, persons who have not previously submitted comments related to wilderness, or who wish to submit any new information or comments related to the range of preliminary alternatives are encouraged to do so.

The GMP project Web site *http://www.nps.gov/havo/parkmgmt/plan.htm* will provide regularly up-dated information regarding the project, including planning process milestones, meeting notices, reports and documents, and useful links associated with the EIS process.

The conservation planning and environmental impact analysis supporting preparation of the GMP/ Wilderness Study will be conducted as described above, in accord with Council on Environmental Quality requirements and other appropriate Federal regulations, and NPS Director's Order 12, 2006 Management Policies pertaining to wilderness, and other NPS procedures and policies. For further information, please contact: Cindy Orlando, Superintendent, Hawaii Volcanoes National Park (contact information as noted above). General information about Hawaii Volcanoes National Park is available at *http://www.nps.gov/havo.*

Decision Process: Following the completion of the scoping phase and consideration of all public concerns and other agency comments, a Draft EIS, wilderness study, and proposed GMP will be prepared and released for public review. Thereafter, the availability of the Final EIS/GMP would be similarly announced in the **Federal Register** and via local and regional news media. As a delegated EIS, the official responsible for the final decision on the GMP is the Regional Director, Pacific West Region,

National Park Service. Following approval of the GMP the official responsible for implementation would be the Superintendent, Hawaii Volcanoes National Park.

Dated: November 3, 2011.

John H. Williams,

Acting Regional Director, Pacific West Region.

[FR Doc. 2011–31040 Filed 12–1–11; 8:45 am]

BILLING CODE 4310–KV–P

DEPARTMENT OF THE INTERIOR

National Park Service

[NPS–PWR–PWRO–1002–8566; 8826–1016–600]

Environmental Impact Statement for Restoration of the Mariposa Grove of Giant Sequoias, Yosemite National Park, Madera, Mariposa, Mono, and Tuolumne Counties, CA

AGENCY: National Park Service.

ACTION: Notice of intent to prepare an Environmental Impact Statement.

SUMMARY: The National Park Service (NPS) is preparing an Environmental Impact Statement (EIS) for the Restoration of the Mariposa Grove of Giant Sequoias in Yosemite National Park. This EIS addresses implementation of actions called for in the 1980 General Management Plan (GMP), presenting comprehensive design alternatives for restoring natural conditions in the Mariposa Grove, as well as improving visitor experience and access within the Grove and at the nearby South Entrance to the park. The NPS is initiating public scoping and consultation with interested members of the public, agencies, and federally recognized American Indian Tribes traditionally associated with the area to help identify topics, issues, and concerns for consideration in the EIS.

DATES: Comments must be received by January 3, 2012.

SUPPLEMENTARY INFORMATION: In 1864, Congress passed landmark legislation preserving both the Mariposa Grove of Giant Sequoias and the Yosemite Valley. This was the first time Congress set aside public lands for the express purpose of preserving scenic and natural values, stating that these areas ''shall be held for public use, resort, and recreation * * * inalienable for all time'' (Act of June 30, 1864, 13 Stat. 325). Giant sequoia groves occur sporadically on the western slope of the Sierra Nevada as remnants of more extensive forests that existed thousands of years ago. These impressive trees are known for their massive size and longevity. The Mariposa Grove comprises about 500 mature giant sequoia trees in an upper and lower grove. It is the largest of three giant sequoia groves within the park. Distribution of the trees is limited by several factors including surface water, typically supplied by melting snow; soil and air moisture; temperature; and ground water. Giant sequoias have expansive but shallow root systems that can reach up to one hundred feet from the base of the tree. Fire plays an important role in giant sequoia ecology, creating canopy openings and releasing soil nutrients needed for seedling establishment. Fire scars on the trees indicate that fires occurred at intervals of approximately 3–15 years within the Mariposa Grove until the late 19th century.

The Mariposa Grove is home to several special-status species, including the pacific fisher (*Martes pennanti,* a candidate for federal listing as a threatened or endangered species), California spotted owls (*Strix occidentalis occidentalis*), Bolander's woodreed (*Cinna bolanderi*), mountain lady's slipper (*Cypripedium montanum*), and Coleman's piperia (*Piperia colemanii*). Cultural resources in the area include archaeological resources and several historic properties either in, or eligible for listing in, the National Register of Historic Places. Historic resources include (1) the Mariposa Grove, a historic district that includes the loop road, several trails, the Civilian Conservation Corps-era comfort station, and the Grove Museum (individually listed), and (2) the South Entrance Station, a historic district that includes the comfort station, ranger residence/garage and the entrance checking station. The Mariposa Grove Road will be assessed for its eligibility for listing in the National Register as part of the project. Non-historic structures and sites within the Grove include the parking areas, gift shop, ticket booth, tram staging area, fueling station, vault toilets, shuttle stops and bus parking areas, several trails, and communications equipment.

Site Management History: Paved roads, parking areas, a campground, and other infrastructure were constructed within the Mariposa Grove from the 1930s to the 1970s. Since then, management practices have evolved along with our understanding of ecology and giant sequoias. After nearly a century of fire suppression, prescribed fire was reintroduced to the Mariposa Grove in 1971, as resource managers recognized that heavy fuel build-up could threaten its survival. Growing concerns about visitation impacts also led to the decision to prohibit private vehicles in the Upper Grove. In the 1980 General Management Plan (GMP), Yosemite National Park outlined goals and actions to protect and restore the Mariposa Grove and improve the nearby south entrance to the park. Some projects have been implemented, such as removal of the campground and lodge. However, several major actions have yet to be fully designed or implemented, such as relocating parking from the Lower Grove, improving facilities, upgrading utilities, and redesigning the South Entrance Station.

Purpose and Need: Comprehensive actions are needed to ensure that the Mariposa Grove continues to thrive and provide inspiration and enjoyment for future generations. Primary goals of this project are to restore degraded habitat and natural processes critical to the long-term health of the Mariposa Grove, and to improve the overall experience for visitors. Existing conditions affecting the health of the Mariposa Grove include (1) roads and other infrastructure are disrupting natural water flows, (2) facilities in the Lower Grove—a parking lot for over 100 vehicles, a tram staging area, fueling station, fuel storage tanks, generators, and a gift shop—are encroaching on sequoias and their habitat, and (3) foot and vehicle traffic have compacted soils and exposed shallow sequoia roots. Stressed trees are less resilient and more susceptible to external threats such as disease, wildfire from surrounding areas, and effects from climate change.

Existing conditions affecting the visitor experience include (1) inadequate information exists to properly orient visitors upon arrival to the park or the Mariposa Grove, (2) road configuration at the South Entrance and entrance to the Mariposa Grove is confusing, (3) the parking lot fills to capacity early in the day, forcing temporary closures of the lot and road, (4) long lines form at the kiosks and intersection as visitors attempt to get information, find parking, or turn around due to lot and road closure, (5) shuttles from Wawona to the Mariposa Grove are often already full when they arrive at the South Entrance Station shuttle stop, and (6) trails and facilities need improvements for accessibility.

Conditions affecting visitor and employee safety include (1) pedestrian crossings to and from the facilities and parking are undefined and hazardous amid the traffic congestion, (2) small entrance station kiosks have insufficient space for employee safety, accessibility, or comfort while working long shifts, (3) multiple left turn lanes crossing one another at the South Entrance Station

increase potential for accidents, and (4) large vehicles have difficulty making the turn to exit the park, sometimes striking barriers and kiosks.

To address these issues, the NPS will be developing a range of alternatives to restore the Mariposa Grove and improve visitor experience, consistent with goals outlined in the GMP. Grove restoration treatment plans will be informed by existing and ongoing scientific research and monitoring. Site design alternatives may include actions such as (1) relocating the parking lot away from the giant sequoias, (2) improving trails and transportation access within and to the Grove, (3) repairing, replacing, and/or removing deteriorating infrastructure and utilities, (4) redesigning traffic circulation, and (5) accommodating parking in the vicinity of South Entrance, with visitor orientation information and shuttle stops.

The EIS will describe and analyze a no-action alternative (maintain current management, roads, and facilities) and several action alternatives for restoring the health of the Mariposa Grove. Alternatives will be developed consistent with applicable federal, state, and local regulations, NPS policies, and relevant park plans, including the Merced River Plan (in progress). All alternatives will include methods to minimize or avoid adverse effects to natural, cultural, and historic resources, and the ''environmentally preferred'' course of action will be identified.

Written comments may be submitted online at: *http://parkplanning.nps.gov/mariposagrove.* Alternately, letters may be mailed to the Superintendent, Attn: Mariposa Grove EIS, P.O. Box 577, Yosemite, CA 95389. Comments may also be submitted in person, during business hours, to the Superintendent's Office in the Valley Administration Building or the Office of Environmental Planning and Compliance, 5083 Foresta Road, El Portal, CA, or may be hand-delivered at the open house.

To learn more about the proposed restoration, the public is invited to attend any of the regularly scheduled park planning open houses. In addition, current project information will be posted at *http://www.nps.gov/yose/parkmgmt/mgrove.htm,* or may be obtained by telephone at the Yosemite Office of Environmental Planning and Compliance (209) 379–1002.

Before including your address, phone number, email address, or other personal identifying information in your comment, you should be aware that your entire comment—including your personal identifying information—may be made publicly available at any time. While you can ask us in your comment to withhold your personal identifying information from public review, we cannot guarantee that we will be able to do so.

Dated: November 4, 2011.

Cynthia L. Ip,

Acting Regional Director, Pacific West Region.

[FR Doc. 2011–31024 Filed 12–1–11; 8:45 am]

BILLING CODE 4312–FY–P

DEPARTMENT OF THE INTERIOR

National Park Service

[NPS–NCR–NACA–1111–8771; 3086–SYM]

Notice of Meeting, National Capital Memorial Advisory Commission

AGENCY: National Park Service, Interior.

ACTION: Notice of meeting.

SUMMARY: Notice is hereby given that the National Capital Memorial Advisory Commission (the Commission) will meet at the National Building Museum, Room 312, 401 F Street NW., Washington, DC, on Wednesday, December 14, 2011, at 10 a.m., to consider matters pertaining to commemorative works in the District of Columbia and its environs.

DATES: Wednesday, December 14, 2011.

ADDRESSES: National Building Museum, Room 312, 401 F Street NW., Washington, DC 20001.

FOR FURTHER INFORMATION CONTACT: Ms. Nancy Young, Secretary to the Commission, by telephone at (202) 619–7097, by email at *nancy_young@nps.gov,* by telefax at (202) 619–7420, or by mail at the National Capital Memorial Advisory Commission, 1100 Ohio Drive SW., Room 220, Washington, DC 20242.

SUPPLEMENTARY INFORMATION: The Commission was established by Public Law 99–652, the Commemorative Works Act (40 U.S.C. Chapter 89 *et seq.*), to advise the Secretary of the Interior (the Secretary) and the Administrator, General Services Administration, (the Administrator) on policy and procedures for establishment of, and proposals to establish, commemorative works in the District of Columbia and its environs, as well as such other matters as it may deem appropriate concerning commemorative works.

The Commission examines each memorial proposal for conformance to the Commemorative Works Act, and makes recommendations to the Secretary and the Administrator and to Members and Committees of Congress. The Commission also serves as a source of information for persons seeking to establish memorials in Washington, DC, and its environs.

The members of the Commission are as follows:

Director, National Park Service;

Administrator, General Services Administration;

Chairman, National Capital Planning Commission;

Chairman, Commission of Fine Arts;

Mayor of the District of Columbia;

Architect of the Capitol;

Chairman, American Battle Monuments Commission;

Secretary of Defense.

The agenda for the meeting is as follows:

(1) Memorial to the Victims of the 1932–1933 Ukrainian Famine-Genocide—Design consultation.

(2) Memorial to President John Adams—Alternative Sites Study consultation. Please contact National Park Service Monuments and Memorials Specialist Glenn DeMarr at (202) 619–7027 or *glenn_demarr@nps.gov* for specific information regarding sites under consideration.

(3) Review of H.R. 3278, a bill to authorize the Fair Housing Foundation to establish a commemorative work to commemorate the national significance of the fair housing movement in America.

The meeting will begin at 10 a.m. and is open to the public. Persons who wish to file a written statement or testify at the meeting or who want further information concerning the meeting may contact Ms. Nancy Young, Secretary to the Commission. Before including your address, phone number, email address, or other personal identifying information in your comment, you should be aware that your entire comment—including your personal identifying information—may be made publicly available at any time. While you can ask us in your comment to withhold your personal identifying information from public review, we cannot guarantee that we will be able to do so.

Dated: November 7, 2011.

Stephen E. Whitesell,

Regional Director, National Capital Region.

[FR Doc. 2011–31042 Filed 12–1–11; 8:45 am]

BILLING CODE 4312–JK–P

DEPARTMENT OF THE INTERIOR

National Park Service

[NPS–WASO–NRNHL–1111–8910; 2200–3200–665]

National Register of Historic Places; Notification of Pending Nominations and Related Actions

Nominations for the following properties being considered for listing or related actions in the National Register were received by the National Park Service before November 12, 2011. Pursuant to section 60.13 of 36 CFR part 60, written comments are being accepted concerning the significance of the nominated properties under the National Register criteria for evaluation. Comments may be forwarded by United States Postal Service, to the National Register of Historic Places, National Park Service, 1849 C St. NW., MS 2280, Washington, DC 20240; by all other carriers, National Register of Historic Places, National Park Service, 1201 Eye St. NW., 8th floor, Washington DC 20005; or by fax, (202) 371–6447. Written or faxed comments should be submitted by December 19, 2011. Before including your address, phone number, email address, or other personal identifying information in your comment, you should be aware that your entire comment—including your personal identifying information—may be made publicly available at any time. While you can ask us in your comment to withhold your personal identifying information from public review, we cannot guarantee that we will be able to do so.

J. Paul Loether,

Chief, National Register of Historic Places/National Historic Landmarks Program.

CALIFORNIA

Fresno County

Fresno County Hall of Records, 2281 Tulare St., Fresno, 11000932

Los Angeles County

Karasik House, 436 Spalding Dr., Beverly Hills, 11000933

Marin County

West Point Inn, Old RR grade, Mt. Tamalpais, Mill Valley, 11000934

Placer County

Auburn City Hall and Fire House, (Auburn, CA MPS) 1103 High St., Auburn, 11000935

Auburn Fire House No. 1, (Auburn, CA MPS) El Dorado St. & Lincoln Way, Auburn, 11000936

Auburn Fire House No. 2, (Auburn, CA MPS) Corner of Washington, Main, & Commercial Sts., Auburn, 11000937

Auburn Grammar School, (Auburn, CA MPS) 1225 Lincoln Way, Auburn, 11000938

Auburn Masonic Temple, (Auburn, CA MPS) 948 Lincoln Way, Auburn, 11000939

Oddfellows Hall, (Auburn, CA MPS) 1256 Lincoln Way, Auburn, 11000940

Placer County Bank, (Auburn, CA MPS) 874 Lincoln Way, Auburn, 11000941

Riverside County

Cabot's Old Indian Pueblo Museum, 67–616 E. Desert View Ave., Desert Hot Springs, 11000942

San Diego County

Beardsley, John R. and Florence Porterfield, House, 3130 Shadowlawn St., San Diego, 11000943

San Francisco County

Sinton House, 1020 Francisco St., San Francisco, 11000944

COLORADO

Boulder County

Cardinal Mill, (Metal Mining and Tourist Era Resources of Boulder County MPS) Address Restricted, Nederland, 11000945

Chaffee County

Jacobs Building, 414 Main St., Buena Vista, 11000946

MARYLAND

Charles County

Johnsontown Tobacco Barn No. 2, (Tobacco Barns of Southern Maryland MPS) 9830 Johnsontown Rd., La Plata, 11000947

MICHIGAN

Gogebic County

Ironwood Carnegie Library, 235 E. Aurora St., Ironwood, 11000948

MINNESOTA

Ramsey County

Hamline Methodist Episcopal Church, 1514 Englewood Ave., St. Paul, 11000950

Thompson, Charles, Memorial Hall, 1824 Marshall Ave., St. Paul, 11000949

MONTANA

Jefferson County

Modern Hotel, Legion Ave, & Main St., Whitehall, 11000951

NORTH CAROLINA

Alamance County

Mebane Commercial Historic District, Bounded by N. 3rd, E. Center, N. 4th, & W. Clay Sts., Mebane, 11000952

Old South Mebane Historic District, Bounded by Holt, S. 1st, S. 5th, Austin, E. Wilson, & Roosevelt Sts., Mebane, 11000953

Cleveland County

Shiloh Presbyterian Church Cemetery, Elm St., .9 mi. S. of US 29, Grover, 11000954

Durham County

Hampton—Ellis Farm, 3305 Pat Tilley Rd., Bahama, 11000955

Wake County

Cameron Village Historic District, (Post-World War II and Modern Architecture in Raleigh, North Carolina 1945–1965 MPS) Roughly bounded by Daniels St., Wade Ave., Woodburn Rd., & Smallwood Dr., Raleigh, 11000956

[FR Doc. 2011–30961 Filed 12–1–11; 8:45 am]

BILLING CODE 4312–51–P

DEPARTMENT OF THE INTERIOR

Bureau of Reclamation

Agency Information Collection; Proposed Revisions to a Currently Approved Information Collection

AGENCY: Bureau of Reclamation, Interior.

ACTION: Notice of revisions.

SUMMARY: The Bureau of Reclamation intends to submit a request for renewal (with revisions) of an existing approved information collection to the Office of Management and Budget (OMB): Use Authorization Application (Form 7–2540), OMB Control Number: 1006–0003.

DATES: Submit written comments on the revised information collection on or before January 31, 2012.

ADDRESSES: Send written comments to or requests for copies of the proposed revised application to the Bureau of Reclamation, Attention: 84–53000, P.O. Box 25007, Denver, CO 80225–0007.

FOR FURTHER INFORMATION CONTACT: Greek Taylor at (303) 445–2895.

SUPPLEMENTARY INFORMATION:

I. Abstract

Reclamation is responsible for approximately 6.5 million acres of land which directly support Reclamation's Federal water projects in the 17 western states. Under Title 43 CFR part 429, individuals or entities wanting to use Reclamation's lands, facilities, or waterbodies must apply using Form 7–2540. Examples of such uses are:

—Agricultural uses such as grazing and farming;

—Commercial or organized recreation and sporting activities;

—Other commercial activities such as ''guiding and outfitting'' and ''filming and photography;'' and

—Resource exploration and extraction, including sand and gravel removal and timber harvesting.

Reclamation reviews applications to determine whether granting individual use authorizations is compatible with Reclamation's present or future uses of the lands, facilities, or waterbodies. When we find a proposed use

compatible, we advise the applicant of the estimated administrative costs and estimated application processing time. In addition to the administrative costs, we require the applicant to pay a use fee based on a valuation or by competitive bidding. If the application is for construction of a bridge, building, or other significant construction project, Reclamation may require that all plans and specifications be signed and sealed by a licensed professional engineer.

II. Changes to the Use Authorization Application Form and Its Instructions

We changed the form and its instructions to expand the examples in the instructions of proposed uses for which you may seek permission and changed some language to more closely reflect the actual wording of 43 CFR part 429.

We made other changes to the form and the instructions to improve the readability and information-gathering. For instance, we re-organized the instructions and added headings. We moved some of the instructions from the first page to the second page and made more room on the first page for details about the proposed use.

Because Social Security Numbers (SSNs) and Taxpayer Identification Numbers (TINs) have been determined to be of limited use, we removed the item which requested them from this form. We removed the item which requested insurance information for similar reasons.

III. Data

OMB Control Number: 1006–0003.

Title: Use Authorization Application.

Form Number: Form 7–2540.

Frequency: Each time a use authorization is requested.

Respondents: Individuals, corporations, companies, and State and local entities who want to use Reclamation lands, facilities, or waterbodies.

Estimated Annual Total Number of Respondents: 175.

Estimated Number of Responses per Respondent: 1.

Estimated Total Number of Annual Responses: 175.

Estimated Total Annual Burden on Respondents: 350 hours.

Estimated Completion Time per Respondent: 2 hours.

IV. Request for Comments

We invite your comments on:

(a) Whether the proposed collection of information is necessary for the proper performance of our functions, including whether the information will have practical use;

(b) The accuracy of our burden estimate for the proposed collection of information;

(c) Ways to enhance the quality, usefulness, and clarity of the information to be collected; and

(d) Ways to minimize the burden of the information collection on respondents, including the use of automated collection techniques or other forms of information technology.

We will summarize all comments received regarding this notice. We will publish that summary in the **Federal Register** when the information collection request is submitted to OMB for review and approval.

Before including your address, telephone number, email address, or other personal identifying information in your comment, you should be aware that your entire comment (including your personal identifying information) may be made publicly available at any time. While you can ask us in your comment to withhold your personal identifying information from public review, we cannot guarantee that we will be able to do so.

Dated: November 28, 2011.

Roseann Gonzales,

Director, Policy and Administration, Denver Office.

[FR Doc. 2011–30993 Filed 12–1–11; 8:45 am]

BILLING CODE 4310–MN–P

DEPARTMENT OF LABOR

Information Collection Request for Unemployment Insurance (UI) Trust Fund Activities Reports: Extension Without Change, Comment Request

AGENCY: Employment and Training Administration, Labor.

ACTION: Notice.

SUMMARY: The Department of Labor, as part of its continuing effort to reduce paperwork and respondent burden, conducts a preclearance consultation program to provide the general public and Federal agencies with an opportunity to comment on proposed and/or continuing collection of information in accordance with the Paperwork Reduction Act of 1995 (PRA95) [44 U.S.C. 3506(c)(2)(A)]. This program helps to ensure that requested data can be provided in the desired format, reporting burden (time and financial resources) is minimized, collection instruments are clearly understood, and the impact of collection requirements on respondents can be properly assessed.

A copy of the proposed information collection request (ICR) can be obtained by contacting the office listed below in the addressee section of this notice or by accessing: *http://www.doleta.gov/OMBCN/OMBControlNumber.cfm.*

DATES: Written comments must be submitted to the office listed in the addressee section below on or before January 31, 2012.

ADDRESSES: Send comments to Joe Williams, U.S. Department of Labor, Employment and Training Administration, Office of Workforce Security, 200 Constitution Avenue NW., Frances Perkins Bldg. Room S–4524, Washington, DC 20210, telephone number (202) 693–2928 (this is not a toll-free number) or by email: *Williams.joseph@dol.gov.*

SUPPLEMENTARY INFORMATION:

I. Background: Section 303(a)(4) of the Social Security Act (SSA) and Section 3304(a)(3) of the Federal Unemployment Tax Act (FUTA) require that all monies received in the unemployment fund of a state be paid immediately to the Secretary of Treasury to the credit of the Unemployment Trust Fund (UTF). This is the ''immediate deposit'' standard.

Section 303(a)(5) of the SSA and Section 3304(a)(4) of the FUTA require that all monies withdrawn from the UTF be used solely for the payment of unemployment compensation, exclusive of the expenses of administration. This is the ''limited withdrawal'' standard.

Federal law (Section 303(a)(6) of the SSA) gives the Secretary of Labor the authority to require the reporting of information deemed necessary to assure state compliance with the provisions of the SSA.

Under this authority, the Secretary of Labor requires the following reports to monitor state compliance with the immediate deposit and limited withdrawal standards:

ETA 2112: UI Financial Transactions Summary, Unemployment Fund.

ETA 8401: Monthly Analysis of Benefit Payment Account.

ETA 8405: Monthly Analysis of Clearing Account.

ETA 8413: Income—Expense Analysis UC Fund, Benefit Payment Account.

ETA 8414: Income—Expense Analysis UC Fund, Clearing Account.

ETA 8403: Summary of Financial Transactions—Title IX Funds.

These reports are submitted to the Office of Unemployment Insurance (OUI) within the Employment and Training Administration which uses them to:

- Monitor cash flows into and out of the UTF to determine state compliance with the immediate deposit and limited withdrawal standards.
- Assure proper accounting for unemployment funds, an integral part of

preparing the Department's consolidated financial statements required by the Chief Financial Officer Act of 1990. The UTF is the single largest asset and liability on the statements.

- Reconcile the Department's records with the U.S. Treasury records.
- Support UI research and actuarial reports analyzing the solvency of the UTF.

The Department seeks renewal of this collection since the reports are essential to the Department's financial statements and program oversight responsibilities.

II. Desired Focus of Comments: Currently the Employment and Training Administration is soliciting comments concerning the proposed extension collection of these reports. Commenters are requested to:

- Evaluate whether the proposed collection of information is necessary for the proper performance of the functions of the agency, including whether the information will have practical utility;
- Evaluate the accuracy of the agency's estimate of the burden of the proposed collection of information, including the validity of the methodology and assumptions used;
- Enhance the quality, utility, and clarity of the information to be collected; and
- Minimize the burden of the collection of information on those who are to respond, including the use of the appropriate automated, electronic, mechanical, technological or other forms of information collection techniques.

III. Current Actions: The continued collection of these financial data are necessary for the purposes of monitoring and evaluating state financial transactions for proper oversight and administration of the UI system.

Type of Review: Extension without change.

Agency: Employment and Training Administration (ETA).

Title: Unemployment Insurance Trust Fund Activities Reports.

OMB Number: 1205–0154.

Agency Number: ETA 2112, 8401, 8405, 8413, 8414, 8403.

Affected Public: State Workforce Agencies.

Total Respondents: 53.

Frequency: ETA 2112, 8401, 8405, 8413, 8414: Monthly.

Total Responses: 53 states × 12 months = 636 responses.

Average time per Response: The ETA 2112, 8401, 8405, 8413, 8414 are all submitted on a monthly basis. *We estimate the state burden to be:* 636 total responses × 2.5 hours for all 5 reports (.5 hours for each report) = 1,590 hours. The ETA 8403 is submitted only when there is activity requiring update of the state's Reed Act account. *We estimate the state burden to be:* 53 states × 6 annual responses × 30 minutes per response = 159 reporting hours.

Estimated Total Burden Hours: 1,749 hours.

Total Burden Cost (capital/startup): $0.

Total Burden Cost (operating/maintaining): $0.

Comments submitted in response to this notice will be summarized and/or included in the request for Office of Management and Budget approval of the information collection request; they will also become a matter of public record.

Dated: Signed in Washington, DC, this 23rd day of November, 2011.

Jane Oates,

Assistant Secretary, Employment and Training Administration.

[FR Doc. 2011–30963 Filed 12–1–11; 8:45 am]

BILLING CODE 4510–FW–P

DEPARTMENT OF LABOR

Employment and Training Administration

Notice of a Change in Status of an Extended Benefit (EB) Period for Pennsylvania

AGENCY: Employment and Training Administration, Labor.

ACTION: Notice.

SUMMARY: This notice announces a change in benefit period eligibility under the EB program for Pennsylvania.

The following changes have occurred since the publication of the last notice regarding the State's EB status:

- Based on the data released by the Bureau of Labor Statistics on October 21, 2011, the three month average, seasonally-adjusted total unemployment rate for Pennsylvania rose to exceed the 8.0% threshold to trigger ''on'' to a high unemployment period (HUP) in EB. The payable period for Pennsylvania in HUP began November 6, 2011 and eligibility for claimants increased from a maximum potential duration of 13 weeks to a maximum potential duration of 20 weeks in the EB program.

The trigger notice covering state eligibility for the EB program can be found at: *http://ows.doleta.gov/unemploy/claims_arch.asp.*

Information for Claimants

The duration of benefits payable in the EB program, and the terms and conditions on which they are payable, are governed by the Federal-State Extended Unemployment Compensation Act of 1970, as amended, and the operating instructions issued to the states by the U.S. Department of Labor. In the case of a state beginning an EB period, the State Workforce Agency will furnish a written notice of potential entitlement to each individual who has exhausted all rights to regular benefits and is potentially eligible for EB (20 CFR 615.13(c)(1)).

Persons who believe they may be entitled to EB, or who wish to inquire about their rights under the program, should contact their State Workforce Agency.

FOR FURTHER INFORMATION CONTACT: Scott Gibbons, U.S. Department of Labor, Employment and Training Administration, Office of Unemployment Insurance, 200 Constitution Avenue NW., Frances Perkins Bldg. Room S–4524, Washington, DC 20210, telephone number (202) 693–3008 (this is not a toll-free number) or by email: *gibbons.scott@dol.gov.*

Signed in Washington, DC, this 23rd day of November, 2011.

Jane Oates,

Assistant Secretary, Employment and Training Administration.

[FR Doc. 2011–30965 Filed 12–1–11; 8:45 am]

BILLING CODE 4510–FW–P

DEPARTMENT OF LABOR

Employment and Training Administration

Notice of a Change in Status of the Payable Periods in the Emergency Unemployment Compensation 2008 (EUC08) Program for Colorado

AGENCY: Employment and Training Administration, Labor.

ACTION: Notice.

SUMMARY: Announcement regarding Notice of a Change in Status of the payable periods in the Emergency Unemployment Compensation 2008 (EUC08) program for Colorado.

Public Law 111–312 extended provisions in Public Law 111–92 which amended prior laws to create Third and Fourth Tiers of benefits within the EUC08 program for qualified unemployed workers claiming benefits in high unemployment states. The Department of Labor produces a trigger notice indicating which states qualify for EUC08 benefits within Tiers Three and Four and provides the beginning and ending dates of payable periods for

each qualifying state. The trigger notice covering state eligibility for the EUC08 program can be found at: *http://ows.doleta.gov/unemploy/claims_arch.asp.*

• Based on data released by the Bureau of Labor Statistics on October 21, 2011, the three month average, seasonally adjusted total unemployment rate for Colorado fell below the 8.5% threshold to remain ''on'' in Tier Four of the EUC08 program. The week ending November 12, 2011, is the last week in which EUC claimants in Colorado can exhaust Tier 3 and establish Tier 4 eligibility. Under the phase-out provisions, claimants who were in Tier Four can receive any remaining entitlement they have in Tier Four after November 12, 2011.

Information for Claimants

The duration of benefits payable in the EUC program, and the terms and conditions under which they are payable, are governed by Public Laws 110–252, 110–449, 111–5, 111–92, 111–118, 111–144, 111–157, 111–205 and 111–312, and the operating instructions issued to the states by the U.S. Department of Labor. Persons who believe they may be entitled to additional benefits under the EUC08 program, or who wish to inquire about their rights under the program, should contact their State Workforce Agency.

FOR FURTHER INFORMATION CONTACT: Scott Gibbons, U.S. Department of Labor, Employment and Training Administration, Office of Unemployment Insurance, 200 Constitution Avenue NW., Frances Perkins Bldg. Room S–4524, Washington, DC 20210, telephone number (202) 693–3008 (this is not a toll-free number) or by email: *gibbons.scott@dol.gov.*

Signed in Washington, DC, this 23rd day of November, 2011.

Jane Oates,

Assistant Secretary, Employment and Training Administration.

[FR Doc. 2011–30964 Filed 12–1–11; 8:45 am]

BILLING CODE 4510–FW–P

DEPARTMENT OF LABOR

Employment and Training Administration

Notice for Delay of Payment of Title XII Interest for Three States

AGENCY: Employment and Training Administration, Labor.

ACTION: Notice.

SUMMARY: This notice announces the approval for delay of Title XII interest payment for three states.

• Section 1202(b)(3)(B) of the Social Security Act permits a state to delay payment of interest accrued on Title XII advances made during the last five months of the Federal fiscal year (FY) (May, June, July, August, and September) to no later than December 31 of the next succeeding calendar year. Interest on the delayed payment will accrue from the normal due date (*i.e.,* September 30) and in the same manner as if the interest due on the advance(s) was an advance made on such due date. During fiscal year 2011, the States of Colorado and New Jersey had requested delay of payment for interest accrued on advances taken during the last five months of FY 2011. Delay of interest payment for these States was granted until December 31, 2012, however New Jersey opted to repay their entire accrued interest liability on September 30, 2011.

• Section 1202(b)(9) of the Social Security Act permits a state to delay for a period not to exceed nine months the Title XII interest payment due prior to October 1 if, for the most recent 12-month period prior to such October 1 for which data are available, the state had an average total unemployment rate of 13.5 percent or greater. An interest payment delayed under paragraph (9) must be paid in full not later than the last official Federal business day prior to the following July 1, allowing that at the state's option payment of delayed interest may be accelerated. No interest shall accrue on such delayed payment. The State of Nevada had requested delay of payment for accrued interest based on these high unemployment provisions, and such delay was granted until June 30, 2012.

FOR FURTHER INFORMATION CONTACT: Thomas Stengle, U.S. Department of Labor, Employment and Training Administration, Office of Unemployment Insurance, 200 Constitution Avenue NW., Frances Perkins Bldg. Room S–4524, Washington, DC 20210, telephone number (202) 693–2991 (this is not a toll-free number) or by email: *stengle.thomas@dol.gov.*

Signed in Washington, DC this 23rd day of November, 2011.

Jane Oates,

Assistant Secretary, Employment and Training Administration.

[FR Doc. 2011–30966 Filed 12–1–11; 8:45 am]

BILLING CODE 4510–FW–P

DEPARTMENT OF LABOR

Employment and Training Administration

2002 Reopened—Previously Denied Determinations; Notice of Revised Denied Determinations on Reconsideration Under the Trade Adjustment Assistance Extension Act of 2011 Regarding Eligibility To Apply for Worker Adjustment Assistance

In accordance with Section 223 of the Trade Act of 1974, as amended (19 U.S.C. 2273) (Act) the Department of Labor (Department) herein presents summaries of revised determinations on reconsideration regarding eligibility to apply for Trade Adjustment Assistance for workers by case (TA–W–) number regarding negative determinations issued during the period of February 13, 2011 through October 21, 2011. Notices of negative determinations were published in the **Federal Register** and on the Department's Web site, as required by Section 221 of the Act (19 U.S.C. 2271). As required by the Trade Adjustment Assistance Extension Act of 2011 (TAAEA), all petitions that were denied during this time period were automatically reconsidered. The reconsideration investigation revealed that the following workers groups have met the certification criteria under the provisions of TAAEA.

After careful review of the additional facts obtained, the following revised determinations on reconsideration have been issued.

TA–W–80,001; Mercer (US), Inc., Chicago, IL: February 15, 2010.

TA–W–80,017; Project Resources Group, La Junta, CO: February 25, 2010.

TA–W–80,025; Samuels Jewelers, Inc., Austin, TX: March 2, 2010.

TA–W–80,028; Affiliated Computer Service, Hillsboro, OR: March 1, 2010.

TA–W–80,036; Jabil Circuit of Texas, McAllen, TX: March 9, 2010.

TA–W–80,057; Orchard Brands, Athens, GA: March 17, 2010.

TA–W–80,071; PCS Administration (USA), Inc., North Brook, IL: March 25, 2010.

TA–W–80,084; Dietrich Industries, Blairsville, PA: April 1, 2010.

TA–W–80,095; 6ixSigma Apparel Network, New York, NY: April 6, 2010.

TA–W–80,144; Paramount Home Furnishings, Greensboro, NC: May 2, 2010.

TA–W–80,146; International Business Machines (IBM), Essex Junction, NY: May 2, 2010.

TA–W–80,146A; International Business Machines (IBM), Poughkeepsie, NY: May 2, 2010.

TA–W–80,146B; International Business Machines (IBM), Charlestown, WV: May 2, 2010.

TA–W–80,166; Computer Sciences Corp (CSC), El Segundo, CA: May 6, 2010.

TA–W–80,213; HealthLink, St. Louis, CA: May 30, 2010.

TA–W–80,220; Pelican Importing & Exporting, Houston, TX: June 6, 2010.

TA–W–80,297; Steiff North America, Lincoln, RI: June 28, 2010.

TA–W–80,300; Rancho La Puerta, San Diego, CA: July 15, 2010.

TA–W–80,316; PreMedia Global, Inc., York, PA: August 25, 2011.

TA–W–80,389; Citicorp Credit Services, Florence, KY: August 23, 2010.

TA–W–80,398; Alventosa, McGaw & Zajac, Jericho, NY: August 26, 2010.

TA–W–80,403; Capgemini America, Inc., Irving, TX: August 10, 2010.

TA–W–80,408; International Business Machines (IBM), Southbury, CT: August 31, 2010.

TA–W–80,412; MoneyGram Payment Systems, Lakewood, CO: September 2, 2010.

TA–W–80,440; Bank of America, E.G. Bank of America, N.A., Scranton, PA: September 14, 2010.

I hereby certify that the aforementioned revised determinations on reconsideration were issued during the period of November 17, 2011 through November 22, 2011. These determinations are available on the Department's Web site at *http://www.doleta.gov/tradeact/taa/taa_search_form.cfm* under the searchable listing of determinations or by calling the Office of Trade Adjustment Assistance toll-free at (888) 365–6822.

Dated: November 25, 2011.

Del Min Amy Chen,

Certifying Officer, Office of Trade Adjustment Assistance.

[FR Doc. 2011–31005 Filed 12–1–11; 8:45 am]

BILLING CODE 4510–FN–P

DEPARTMENT OF LABOR

Employment and Training Administration

2002 Reopened—Previously Denied Determinations; Notice of Negative Determinations on Reconsideration Under the Trade Adjustment Assistance Extension Act of 2011 Regarding Eligibility To Apply for Worker Adjustment Assistance

In accordance with Section 223 of the Trade Act of 1974, as amended (19 U.S.C. 2273) (Act) the Department of Labor (Department) herein presents summaries of negative determinations on reconsideration regarding eligibility to apply for Trade Adjustment Assistance for workers by case (TA–W–) number regarding negative determinations issued during the period of *February 13, 2011 through October 21, 2011.* Notices of negative determinations were published in the *Federal Register* and on the Department's Web site, as required by Section 221 of the Act (19 U.S.C. 2271). As required by the Trade Adjustment Assistance Extension Act of 2011 (TAAEA), all petitions that were denied during this time period were automatically reopened. The reconsideration investigation revealed that the following workers groups have not met the certification criteria under the provisions of TAAEA.

After careful review of the additional facts obtained, the following negative determinations on reconsideration have been issued.

TA–W–80,008; Twin County Ford, Woodlawn, VA.

TA–W–80,020; Hankook Tire Co., Uniontown, OH.

TA–W–80,054; W. M. Glenn Construction, Durham, NC.

TA–W–80,077; Federal Broach and Machine Co., Tempe, AZ.

TA–W–80,082; United Furniture Industries, Amory, MS.

TA–W–80,091; G & G Garments, New York, NY.

TA–W–80,208; General Motors Components Holdings, Rochester, NY.

TA–W–80,247; DMAX Ltd., Inc., Moraine, OH.

TA–W–80,256; The News & Observer Publishing, Raleigh, NC.

TA–W–80,325; UTC Corp., Syracuse, NY.

TA–W–80,337; 84 Lumber Co., Forest Grove, OR.

I hereby certify that the aforementioned revised determinations on reconsideration were issued during the period of November 17, 2011 through November 22, 2011. These determinations are available on the Department's Web site at *http://www.doleta.gov/tradeact/taa/taa_search_form.cfm* under the searchable listing of determinations or by calling the Office of Trade Adjustment Assistance toll-free at (888) 365–6822.

Dated: November 25, 2011.

Del Min Amy Chen,

Certifying Officer, Office of Trade Adjustment Assistance.

[FR Doc. 2011–31006 Filed 12–1–11; 8:45 am]

BILLING CODE 4510–FN–P

DEPARTMENT OF LABOR

Employment and Training Administration

Request for Certification of Compliance; Rural Industrialization Loan and Grant Program

AGENCY: Employment and Training Administration, Labor.

ACTION: Notice.

SUMMARY: The Employment and Training Administration is issuing this notice to announce the receipt of a ''Certification of Non-Relocation and Market and Capacity Information Report'' (Form 4279–2) for the following:

Applicant/Location: Stion Solar Mississippi, LLC & Stion Equipment Leasing, LLC.

Principal Product/Purpose: The loan, guarantee, or grant application is to enable Stion to purchase equipment to produce 75,000 solar panels annually in a plant located in Hattiesburg, Mississippi. The NAICS industry code for this enterprise is: 334413 (semiconductor and related device manufacturing).

DATES: All interested parties may submit comments in writing no later than December 16, 2011.

Copies of adverse comments received will be forwarded to the applicant noted above.

ADDRESSES: Address all comments concerning this notice to Anthony D. Dais, U.S. Department of Labor, Employment and Training Administration, 200 Constitution Avenue NW., Room S–4231, Washington, DC 20210; or email *Dais.Anthony@dol.gov;* or transmit via fax (202) 693–3015 (this is not a toll-free number).

FOR FURTHER INFORMATION CONTACT: Anthony D. Dais, at telephone number (202) 693–2784 (this is not a toll-free number).

SUPPLEMENTARY INFORMATION: Section 188 of the Consolidated Farm and Rural Development Act of 1972, as established under 29 CFR Part 75, authorizes the United States Department of Agriculture to make or guarantee loans or grants to finance industrial and business activities in rural areas. The Secretary of Labor must review the application for financial assistance for the purpose of certifying to the Secretary of Agriculture that the assistance is not calculated, or likely, to result in: (a) A transfer of any employment or business activity from one area to another by the loan applicant's business operation; or, (b) An increase in the production of goods, materials, services, or facilities in an area where there is not sufficient demand to employ the efficient capacity of existing competitive enterprises unless the financial assistance will not have an adverse impact on existing competitive enterprises in the area. The Employment and Training Administration within the Department of Labor is responsible for the review and certification process. Comments should address the two bases for certification and, if possible, provide data to assist in the analysis of these issues.

Signed at Washington, DC, this 21st day of November, 2011.

Jane Oates,

Assistant Secretary for Employment and Training.

[FR Doc. 2011–30943 Filed 12–1–11; 8:45 am]

BILLING CODE 4510–FN–P

NATIONAL AERONAUTICS AND SPACE ADMINISTRATION

[Notice (11–116)]

NASA Advisory Council; Aeronautics Committee; Unmanned Aircraft Systems (UAS) Subcommittee Meeting

AGENCY: National Aeronautics and Space Administration.

ACTION: Notice of Meeting.

SUMMARY: In accordance with the Federal Advisory Committee Act, Public Law 92–463, as amended, the National Aeronautics and Space Administration announces a meeting of the UAS Subcommittee of the Aeronautics Committee of the NASA Advisory Council. The meeting will be held for the purpose of soliciting, from the aeronautics community and other persons, research and technical information relevant to program planning.

DATES: Tuesday, December 20, 2011, 1 p.m. to 4:30 p.m., Local Time.

ADDRESSES: National Aeronautics and Space Administration Headquarters, Room 6B42, 301 E Street SW., Washington, DC 20546.

FOR FURTHER INFORMATION CONTACT: Ms. Brenda L. Mulac, Executive Secretary for the UAS Subcommittee of the Aeronautics Committee, National Aeronautics and Space Administration Headquarters, Washington, DC 20546, (202) 358–1578, or *brenda.l.mulac@nasa.gov*.

SUPPLEMENTARY INFORMATION: The meeting will be open to the public up to the capacity of the room. Any person interested in participating in the meeting by Webex and telephone should contact Ms. Brenda L. Mulac at (202) 358–1578 for the Web link, toll-free number and passcode. The agenda for the meeting includes the following topics:

- Overview of the Integration of UAS into the National Airspace System project.
- UAS Subcommittee 2012 Planning.

It is imperative that these meetings be held on this date to accommodate the scheduling priorities of the key participants. Attendees will be requested to comply with NASA security requirements, including the presentation of a valid picture ID, before receiving an access badge. U.S. citizens will need to show valid, officially-issued picture identification such as driver's license to enter the NASA Headquarters building (West Lobby—Visitor Control Center) and must state that they are attending the NASA Advisory Council Aeronautics Committee UAS Subcommittee meeting in conference room 6B42 before receiving an access badge. All non-U.S. citizens must fax a copy of their passport, and print or type their name, current address, citizenship, company affiliation (if applicable) to include address, telephone number, and their title, place of birth, date of birth, U.S. visa information to include type, number, and expiration date, U.S. Social Security Number (if applicable), Permanent Resident Alien card number and expiration date (if applicable), and place and date of entry into the U.S., to Ms. Brenda L. Mulac, NASA Advisory Council Aeronautics Committee UAS Subcommittee Executive Secretary, FAX (202) 358–3602, by no less than 8 working days prior to the meeting. Non-U.S. citizens will need to show their Passport or Permanent Resident Alien card to enter the NASA Headquarters building. For questions, please call Ms. Brenda L. Mulac at (202) 358–1578.

P. Diane Rausch,

Advisory Committee Management Officer, National Aeronautics and Space Administration.

[FR Doc. 2011–31034 Filed 12–1–11; 8:45 am]

BILLING CODE P

THE NATIONAL FOUNDATION ON THE ARTS AND THE HUMANITIES

Federal Council on the Arts and the Humanities; Renewal of the Advisory Committee: Arts and Artifacts Indemnity Panel

AGENCY: Federal Council on the Arts and the Humanities.

ACTION: Notice of Federal Advisory Committee Renewal.

SUMMARY: The Federal Council on the Arts and the Humanities has determined to renew the charter of its Advisory Committee, the Arts and Artifacts Indemnity Panel.

FOR FURTHER INFORMATION CONTACT: Lisette Voyatzis, Committee Management Officer, at (202) 606–8322. Written comments should be submitted to Alice Whelihan, Indemnity Administrator, National Endowment for the Arts, 1100 Pennsylvania Avenue NW., Washington, DC 20506. Electronic comments may be submitted to Alice Whelihan at *whelihaa@arts.gov.*

SUPPLEMENTARY INFORMATION: The Federal Council on the Arts and the Humanities (''Council'') has determined to renew the charter of its Arts and Artifacts Indemnity Panel. The Council has determined that renewing the advisory committee is in the public interest in connection with the duties imposed on the Council by the Arts and Artifacts Indemnity Act, 20 U.S.C. 971 *et seq.,* as amended. The Arts and Artifacts Indemnity Panel has been renewed through November 28, 2013. Pursuant to section 14(a) (2) of the Federal Advisory Committee Act, the committee may again be renewed at that time.

Lisette Voyatzis,

Advisory Committee Management Officer.

[FR Doc. 2011–30973 Filed 12–1–11; 8:45 am]

BILLING CODE 7536–01–P

NATIONAL LABOR RELATIONS BOARD

Sunshine Act Meetings: December 2011

TIME AND DATES: All meetings are held at 2:30 p.m.

Thursday, December 1;
Tuesday, December 6;
Wednesday, December 7;
Thursday, December 8;
Tuesday, December 13;
Wednesday, December 14;
Thursday, December 15;
Tuesday, December 20;
Wednesday, December 21;
Thursday, December 22;
Tuesday, December 27;
Wednesday, December 28;
Thursday, December 29.

PLACE: Board Agenda Room, No. 11820, 1099 14th St. NW., Washington, DC 20570.

STATUS: Closed.

MATTERS TO BE CONSIDERED: Pursuant to § 102.139(a) of the Board's Rules and Regulations, the Board or a panel thereof will consider ''the issuance of a subpoena, the Board's participation in a civil action or proceeding or an arbitration, or the initiation, conduct, or disposition * * * of particular representation or unfair labor practice proceedings under section 8, 9, or 10 of the [National Labor Relations] Act, or any court proceedings collateral or ancillary thereto.'' See also 5 U.S.C. 552b(c)(10).

Dated: November 30, 2011.

CONTACT PERSON FOR MORE INFORMATION: Lester A. Heltzer, Executive Secretary, (202) 273–1067.

Lester A. Heltzer,

Executive Secretary.

[FR Doc. 2011–31163 Filed 11–30–11; 4:15 pm]

BILLING CODE 7545–01–P

NUCLEAR REGULATORY COMMISSION

[NRC–2011–0249]

Appointments to Performance Review Boards for Senior Executive Service

AGENCY: Nuclear Regulatory Commission.

ACTION: Appointment to Performance Review Boards for Senior Executive Service.

SUMMARY: This notice announces a change in the membership of the Senior Executive Service Performance Review Board for the U.S. Nuclear Regulatory Commission (NRC).

SUPPLEMENTARY INFORMATION: On October 26, 2011 (76 FR 66332), the NRC published its list of the Performance Review Board appointees pursuant to the regulation at 5 CFR 430.310. This notice announces the appointment of Mark A. Satorius to the Performance Review Board in place of Catherine Haney, who is unavailable to participate this year. Brian W. Sheron is appointed to the Performance Review Board Panel in place of Mark A. Satorius. The NRC Performance Review Board (PRB) is responsible for making recommendations to the appointing and awarding authorities on performance appraisal ratings and performance awards for Senior Executives and Senior Level employees. For the public's convenience, an updated membership list of the Performance Review Board is provided below:

Darren B. Ash, Deputy Executive Director for Corporate Management, Office of the Executive Director for Operations.
R. W. Borchardt, Executive Director for Operations.
Stephen G. Burns, General Counsel.
James E. Dyer, Chief Financial Officer.
Kathryn O. Greene, Director, Office of Administration.
Eric J. Leeds, Director, Office of Nuclear Reactor Regulation.
Victor M. McCree, Regional Administrator, Region II.
Mark A. Satorius, Director, Office of Federal and State Materials and Environmental Management Programs.
Annette L. Vietti-Cook, Secretary of the Commission, Office of the Secretary.
Martin J. Virgilio, Deputy Executive Director for Reactor and Preparedness Programs, Office of the Executive Director for Operations.
Michael F. Weber, Deputy Executive Director for Materials, Waste, Research, State,
Tribal, and Compliance Programs, Office of the Executive Director for Operations.
James T. Wiggins, Director, Office of Nuclear Security and Incident Response.

The following individuals will serve as members of the NRC PRB Panel that was established to review appraisals and make recommendations to the appointing and awarding authorities for NRC PRB members:

Marvin L. Itzkowitz, Associate General Counsel for Hearings, Enforcement, and Administration, Office of the General Counsel.
Michael R. Johnson, Director, Office of New Reactors.
Brian W. Sheron, Director, Office of Nuclear Regulatory Research.

All appointments are made pursuant to Section 4314 of Chapter 43 of Title 5 of the United States Code.

DATES: Effective Date: December 2, 2011.

FOR FURTHER INFORMATION, CONTACT: Secretary, Executive Resources Board, U.S. Nuclear Regulatory Commission, Washington, DC 20555, (301) 492–2076.

Dated at Bethesda, Maryland this 22nd day of November, 2011.

For the U.S. Nuclear Regulatory Commission.

Miriam L. Cohen,

Secretary, Executive Resources Board.

[FR Doc. 2011–31013 Filed 12–1–11; 8:45 am]

BILLING CODE 7590–01–P

NUCLEAR REGULATORY COMMISSION

[Docket Nos. 52–018 and 52–019; NRC–2008–0170, Docket Nos. 52–022 and 52–023; NRC–2008–0231, Docket Nos. 52–029 and 52–030; NRC–2008–0558, Docket Nos. 52–040 and 52–041; NRC–2009–0337]

Notice of Availability of Combined License Applications

ACTION: Combined license applications; receipt.

SUMMARY: The U.S. Nuclear Regulatory Commission (NRC) is giving notice once each week for four consecutive weeks of combined license (COL) applications from Progress Energy Florida, Inc., Duke Energy Carolinas, LLC, Progress Energy Carolinas, Inc., and Florida Power & Light Company.

ADDRESSES: You can access publicly available documents related to this action using the following methods:

- *NRC's Public Document Room (PDR):* The public may examine and have copied, for a fee, publicly available documents at the NRC's PDR, O1–F21, One White Flint North, 11555 Rockville Pike, Rockville, Maryland 20852.
- *NRC's Agencywide Documents Access and Management System (ADAMS):* Publicly available documents created or received at the NRC are available online in the NRC Library at *http://www.nrc.gov/reading-rm/adams.html.* From this page, the public can gain entry into ADAMS, which provides text and image files of the NRC's public documents. If you do not have access to ADAMS or if there are problems in accessing the documents located in ADAMS, contact the NRC's PDR reference staff at 1–(800) 397–4209, (301) 415–4737, or by email to *pdr.resource@nrc.gov.* The ADAMS accession numbers for the initial application cover letters are as follows: ML073510494 for William States Lee III

Nuclear Station Units 1 and 2, ML080580078 for Shearon Harris Nuclear Power Plant Units 2 and 3; ML082260277 for Levy Nuclear Plant Units 1 and 2; and ML091830589 for Turkey Point Units 6 and 7.

• *Federal Rulemaking Web site:* Public comments and supporting materials related to this action can be found at *http://www.regulations.gov* by searching on Docket ID NRC–2008–0170 (William States Lee III Nuclear Station Units 1 and 2), NRC–2008–0231 (Shearon Harris Nuclear Power Plant Units 2 and 3), NRC–2008–0558 (Levy Nuclear Plant Units 1 and 2), and NRC–2009–0337 (Turkey Point Units 6 and 7). Address questions about NRC dockets to Carol Gallagher, telephone: (301) 492–3668; email: *Carol.Gallagher@nrc.gov.*

The applications are also available at *http://www.nrc.gov/reactors/new-reactors/col.html.*

FOR FURTHER INFORMATION CONTACT: Donald Habib, Office of New Reactors, U.S. Nuclear Regulatory Commission, Washington, DC 20555–0001, telephone: (301) 415–1035, email: *Donald.Habib@nrc.gov.*

SUPPLEMENTARY INFORMATION: The following parties have filed applications for COLs with the NRC, pursuant to Section 103 of the Atomic Energy Act of 1954, as amended, and Title 10 of the Code of Federal Regulations (10 CFR) part 52, ''Licenses, Certifications, and Approvals for Nuclear Power Plants:''

1. On December 12, 2007, Duke Energy Carolinas, LLC, submitted an application for COLs for two AP1000 advanced passive pressurized water reactors designated as William States Lee III Nuclear Station Units 1 and 2 in Cherokee County, South Carolina.

2. On February 18, 2008, Progress Energy Carolinas, Inc., submitted an application for COLs for two AP1000 advanced passive pressurized water reactors designated as Shearon Harris Nuclear Power Plant Units 2 and 3 in Wake County, North Carolina.

3. On July 28, 2008, Progress Energy Florida, Inc., submitted an application for COLs for two AP1000 advanced passive pressurized water reactors designated as Levy Nuclear Plant Units 1 and 2 in Levy County, Florida.

4. On June 30, 2009, Florida Power & Light Company submitted an application for COLs for two AP1000 advanced passive pressurized water reactors designated as Turkey Point Units 6 and 7 in Miami-Dade County, Florida.

These four applications are currently under review by the NRC staff.

An applicant may seek a COL in accordance with Subpart C of 10 CFR part 52. The information submitted by the applicant includes certain administrative information, such as financial qualifications submitted pursuant to 10 CFR 52.77, as well as technical information submitted pursuant to 10 CFR 52.79. These notices are being provided in accordance with the requirements in 10 CFR 50.43(a)(3).

For the Nuclear Regulatory Commission.

Dated at Rockville, Maryland, this 28th day of November, 2011.

Jeffrey Cruz,

Chief, AP1000 Projects Branch 1, Division of New Reactor Licensing, Office of New Reactors.

[FR Doc. 2011–31011 Filed 12–1–11; 8:45 am]

BILLING CODE 7590–01–P

OFFICE OF PERSONNEL MANAGEMENT

Federal Prevailing Rate Advisory Committee; Open Committee Meetings

According to the provisions of section 10 of the Federal Advisory Committee Act (Pub. L. 92–463), notice is hereby given that meetings of the Federal Prevailing Rate Advisory Committee will be held on—

Thursday, January 19, 2012
Thursday, February 16, 2012
Thursday, March 15, 2012
Thursday, April 19, 2012
Thursday, May 24, 2012
Thursday, June 21, 2012
Thursday, July 19, 2012
Thursday, August 16, 2012
Thursday, September 13, 2012
Thursday October 18, 2012
Thursday, November 15, 2012
Thursday, December 13, 2012

The meetings will start at 10 a.m. and will be held in Room 5A06A, U.S. Office of Personnel Management Building, 1900 E Street, NW., Washington, DC.

The Federal Prevailing Rate Advisory Committee is composed of a Chair, five representatives from labor unions holding exclusive bargaining rights for Federal blue-collar employees, and five representatives from Federal agencies. Entitlement to membership on the Committee is provided for in 5 U.S.C. 5347.

The Committee's primary responsibility is to review the Prevailing Rate System and other matters pertinent to establishing prevailing rates under subchapter IV, chapter 53, 5 U.S.C., as amended, and from time to time advise the U.S. Office of Personnel Management.

These scheduled meetings are open to the public with both labor and management representatives attending. During the meetings either the labor members or the management members may caucus separately to devise strategy and formulate positions. Premature disclosure of the matters discussed in these caucuses would unacceptably impair the ability of the Committee to reach a consensus on the matters being considered and would disrupt substantially the disposition of its business. Therefore, these caucuses will be closed to the public because of a determination made by the Director of the U.S. Office of Personnel Management under the provisions of section 10(d) of the Federal Advisory Committee Act (Pub. L. 92–463) and 5 U.S.C. 552b(c)(9)(B). These caucuses may, depending on the issues involved, constitute a substantial portion of a meeting.

Annually, the Chair compiles a report of pay issues discussed and concluded recommendations. These reports are available to the public, upon written request to the Committee.

The public is invited to submit material in writing to the Chair on Federal Wage System pay matters felt to be deserving of the Committee's attention. Additional information on these meetings may be obtained by contacting the Committee at U.S. Office of Personnel Management, Federal Prevailing Rate Advisory Committee, Room 5H27, 1900 E Street, NW., Washington, DC 20415, (202) 606–9400.

U.S. Office of Personnel Management.

Sheldon Friedman,

Chairman, Federal Prevailing Rate Advisory Committee.

[FR Doc. 2011–31057 Filed 12–1–11; 8:45 am]

BILLING CODE 6325–49–P

OFFICE OF PERSONNEL MANAGEMENT

Hispanic Council on Federal Employment

AGENCY: Office of Personnel Management.

ACTION: Scheduling of Council meeting.

SUMMARY: The Hispanic Council on Federal Employment will hold its fifth meeting on Friday, December 16, 2011, at the time and location shown below. The Council is an advisory committee composed of representatives from Hispanic organizations and senior government officials. Along with its other responsibilities, the Council shall advise the Director of the Office of Personnel Management on matters involving the recruitment, hiring, and advancement of Hispanics in the

Federal workforce. The Council is co-chaired by the Chief of Staff of the Office of Personnel Management and the Assistant Secretary for Human Resources and Administration at the Department of Veterans Affairs.

The meeting is open to the public. Please contact the Office of Personnel Management at the address shown below if you wish to present material to the Council at the meeting. The manner and time prescribed for presentations may be limited, depending upon the number of parties that express interest in presenting information.

DATES: December 16, 2011 from 2 p.m.–4 p.m.

Location: U.S. Office of Personnel Management, the Pendleton, Theodore Roosevelt Building, 1900 E St. NW., Washington, DC 20415.

FOR FURTHER INFORMATION CONTACT: Veronica E. Villalobos, Director for the Office of Diversity and Inclusion, Office of Personnel Management, 1900 E St. NW., Suite 5H35, Washington, DC 20415. Phone (202) 606–0020, Fax (202) 606–2183 or email at *Mauro.Morales@opm.gov.*

U.S. Office of Personnel Management.

John Berry,

Director.

[FR Doc. 2011–31060 Filed 12–1–11; 8:45 am]

BILLING CODE 6325–46–P

POSTAL REGULATORY COMMISSION

[Docket No. A2012–59; Order No. 1000]

Post Office Closing

AGENCY: Postal Regulatory Commission.

ACTION: Notice.

SUMMARY: This document informs the public that an appeal of the closing of the New Cambria, Kansas post office has been filed. It identifies preliminary steps and provides a procedural schedule. Publication of this document will allow the Postal Service, petitioners, and others to take appropriate action.

DATES: November 22, 2011: Administrative record due (from Postal Service); December 23, 2011, 4:30 p.m., Eastern Time: Deadline for notices to intervene. *See* the Procedural Schedule in the **SUPPLEMENTARY INFORMATION** section for other dates of interest.

ADDRESSES: Submit comments electronically by accessing the ''Filing Online'' link in the banner at the top of the Commission's Web site (*http://www.prc.gov*) or by directly accessing the Commission's Filing Online system at *https://www.prc.gov/prc-pages/filing-online/login.aspx.* Commenters who cannot submit their views electronically should contact the person identified in the **FOR FURTHER INFORMATION CONTACT** section as the source for case-related information for advice on alternatives to electronic filing.

FOR FURTHER INFORMATION CONTACT: Stephen L. Sharfman, General Counsel, at (202) 789–6820 (case-related information) or *DocketAdmins@prc.gov* (electronic filing assistance).

SUPPLEMENTARY INFORMATION: Notice is hereby given that, pursuant to 39 U.S.C. 404(d), on November 7, 2011, the Commission received a petition for review of the Postal Service's determination to close the New Cambria post office in New Cambria, Kansas. The petition for review was filed by Doris C. McCall (Petitioner) and is postmarked October 24, 2011. The Commission hereby institutes a proceeding under 39 U.S.C. 404(d)(5) and establishes Docket No. A2012–59 to consider Petitioner's appeal. If Petitioner would like to further explain her position with supplemental information or facts, Petitioner may either file a Participant Statement on PRC Form 61 or file a brief with the Commission no later than December 12, 2011.

Categories of issues apparently raised. Petitioner contends that (1) the Postal Service failed to consider whether or not it will continue to provide a maximum degree of effective and regular postal services to the community (*see* 39 U.S.C. 404(d)(2)(A)(iii)); and (2) the Postal Service failed to follow procedures required by law regarding closures (*see* 39 U.S.C. 404(d)(5)(B)).

After the Postal Service files the administrative record and the Commission reviews it, the Commission may find that there are more legal issues than those set forth above, or that the Postal Service's determination disposes of one or more of those issues. The deadline for the Postal Service to file the applicable administrative record is within 15 days after the date in which the petition for review was filed with the Commission. *See* 39 CFR 3001.113. In addition, the due date for any responsive pleading by the Postal Service is also within 15 days after the date in which the petition for review was filed with the Commission.

Availability; Web site posting. The Commission has posted the appeal and supporting material on its Web site at *http://www.prc.gov.* Additional filings in this case and participant's submissions also will be posted on the Web site, if provided in electronic format or amenable to conversion, and not subject to a valid protective order. Information on how to use the Commission's Web site is available online or by contacting the Commission's webmaster via telephone at (202) 789–6873 or via electronic mail at *prc-webmaster@prc.gov.*

The appeal and all related documents are also available for public inspection in the Commission's docket section. Docket section hours are 8 a.m. to 4:30 p.m., Eastern Time, Monday through Friday, except on Federal government holidays. Docket section personnel may be contacted via electronic mail at *prc-dockets@prc.gov* or via telephone at (202) 789–6846.

Filing of documents. All filings of documents in this case shall be made using the Internet (Filing Online) pursuant to Commission rules 9(a) and 10(a) at the Commission's Web site, *http://www.prc.gov,* unless a waiver is obtained. *See* 39 CFR 3001.9(a) and 3001.10(a). Instructions for obtaining an account to file documents online may be found on the Commission's Web site, *http://www.prc.gov,* or by contacting the Commission's docket section at *prc-dockets@prc.gov* or via telephone at (202) 789–6846.

Commission reserves the right to redact personal information which may infringe on an individual's privacy rights from documents filed in this proceeding.

Intervention. Persons, other than the Petitioners and respondents, wishing to be heard in this matter are directed to file a notice of intervention. *See* 39 CFR 3001.111(b). Notices of intervention in this case are to be filed on or before December 23, 2011. A notice of intervention shall be filed using the Internet (Filing Online) at the Commission's Web site, *http://www.prc.gov,* unless a waiver is obtained for hardcopy filing. *See* 39 CFR 3001.9(a) and 3001.10(a).

Further procedures. By statute, the Commission is required to issue its decision within 120 days from the date it receives the appeal. *See* 39 U.S.C. 404(d)(5). A procedural schedule has been developed to accommodate this statutory deadline. In the interest of expedition, in light of the 120-day decision schedule, the Commission may request the Postal Service or other participants to submit information or memoranda of law on any appropriate issue. As required by Commission rules, if any motions are filed, responses are due 7 days after any such motion is filed. *See* 39 CFR 3001.21.

It is ordered:

1. The procedural schedule listed below is hereby adopted.

2. Pursuant to 39 U.S.C. 505, Emmett Rand Costich is designated officer of the

Commission (Public Representative) to represent the interests of the general public.

3. The Secretary shall arrange for publication of this notice and order and Procedural Schedule in the **Federal Register.**

By the Commission.

Shoshana M. Grove,

Secretary.

PROCEDURAL SCHEDULE

November 7, 2011	Filing of Appeal.
November 22, 2011	Deadline for the Postal Service to file the applicable administrative record in this appeal.
November 22, 2011	Deadline for the Postal Service to file any responsive pleading.
December 23, 2011	Deadline for notices to intervene (*see* 39 CFR 3001.111(b)).
December 12, 2011	Deadline for Petitioners' Form 61 or initial brief in support of petition (*see* 39 CFR 3001.115(a) and (b)).
January 3, 2012	Deadline for answering brief in support of the Postal Service (*see* 39 CFR 3001.115(c)).
January 18, 2012	Deadline for reply briefs in response to answering briefs (*see* 39 CFR 3001.115(d)).
January 25, 2012	Deadline for motions by any party requesting oral argument; the Commission will schedule oral argument only when it is a necessary addition to the written filings (*see* 39 CFR 3001.116).
February 21, 2012	Expiration of the Commission's 120-day decisional schedule (*see* 39 U.S.C. 404(d)(5)).

[FR Doc. 2011–31021 Filed 12–1–11; 8:45 am]

BILLING CODE 7710–FW–P

POSTAL REGULATORY COMMISSION

[Docket No. A2012–60; Order No. 1001]

Post Office Closing

AGENCY: Postal Regulatory Commission.

ACTION: Notice.

SUMMARY: This document informs the public that an appeal of the closing of the Prescott, Iowa post office has been filed. It identifies preliminary steps and provides a procedural schedule. Publication of this document will allow the Postal Service, petitioners, and others to take appropriate action.

DATES:

November 22, 2011: Administrative record due (from Postal Service);

December 23, 2011, 4:30 p.m., Eastern Time: Deadline for notices to intervene.

See the Procedural Schedule in the **SUPPLEMENTARY INFORMATION** section for other dates of interest.

ADDRESSES: Submit comments electronically by accessing the ''Filing Online'' link in the banner at the top of the Commission's Web site (*http://www.prc.gov*) or by directly accessing the Commission's Filing Online system at *https://www.prc.gov/prc-pages/filing-online/login.aspx.* Commenters who cannot submit their views electronically should contact the person identified in the **FOR FURTHER INFORMATION CONTACT** section as the source for case-related information for advice on alternatives to electronic filing.

FOR FURTHER INFORMATION CONTACT: Stephen L. Sharfman, General Counsel, at (202) 789–6820 (case-related information) or *DocketAdmins@prc.gov* (electronic filing assistance).

SUPPLEMENTARY INFORMATION: Notice is hereby given that, pursuant to 39 U.S.C. 404(d), the Commission received two petitions for review of the Postal Service's determination to close the Prescott post office in Prescott, Iowa. The first petition for review received November 7, 2011, was filed by Dan Westlake. The second petition for review received November 17, 2011, was filed by Joyce James. The earliest postmark date is October 26, 2011. The Commission hereby institutes a proceeding under 39 U.S.C. 404(d)(5) and establishes Docket No. A2012–60 to consider Petitioners' appeal. If Petitioners would like to further explain their position with supplemental information or facts, Petitioners may either file a Participant Statement on PRC Form 61 or file a brief with the Commission no later than December 12, 2011.

Categories of issues apparently raised. Petitioners contend that (1) the Postal Service failed to consider the effect of the closing on the community (*see* 39 U.S.C. 404(d)(2)(A)(i)); (2) the Postal Service failed to consider whether or not it will continue to provide a maximum degree of effective and regular postal services to the community (*see* 39 U.S.C. 404(d)(2)(A)(iii)); and (3) the Postal Service failed to adequately consider the economic savings resulting from the closure (*see* 39 U.S.C. 404(d)(2)(A)(iv)).

After the Postal Service files the administrative record and the Commission reviews it, the Commission may find that there are more legal issues than those set forth above, or that the Postal Service's determination disposes of one or more of those issues. The deadline for the Postal Service to file the applicable administrative record is within 15 days after the date in which the petition for review was filed with the Commission. *See* 39 CFR 3001.113. In addition, the due date for any responsive pleading by the Postal Service is also within 15 days after the date in which the petition for review was filed with the Commission.

Availability; Web site posting. The Commission has posted the appeal and supporting material on its Web site at *http://www.prc.gov.* Additional filings in this case and participant's submissions also will be posted on the Web site, if provided in electronic format or amenable to conversion, and not subject to a valid protective order. Information on how to use the Commission's Web site is available online or by contacting the Commission's webmaster via telephone at (202) 789–6873 or via electronic mail at *prc-webmaster@prc.gov.*

The appeal and all related documents are also available for public inspection in the Commission's docket section. Docket section hours are 8 a.m. to 4:30 p.m., Eastern Time, Monday through Friday, except on Federal government holidays. Docket section personnel may be contacted via electronic mail at *prc-dockets@prc.gov* or via telephone at (202) 789–6846.

Filing of documents. All filings of documents in this case shall be made using the Internet (Filing Online) pursuant to Commission rules 9(a) and 10(a) at the Commission's Web site, *http://www.prc.gov,* unless a waiver is obtained. *See* 39 CFR 3001.9(a) and 3001.10(a). Instructions for obtaining an account to file documents online may be found on the Commission's Web site, *http://www.prc.gov,* or by contacting the Commission's docket section at *prc-dockets@prc.gov* or via telephone at (202) 789–6846.

Commission reserves the right to redact personal information which may infringe on an individual's privacy rights from documents filed in this proceeding.

Intervention. Persons, other than the Petitioners and respondents, wishing to be heard in this matter are directed to file a notice of intervention. *See* 39 CFR

3001.111(b). Notices of intervention in this case are to be filed on or before December 23, 2011. A notice of intervention shall be filed using the Internet (Filing Online) at the Commission's Web site, *http://www.prc.gov,* unless a waiver is obtained for hardcopy filing. *See* 39 CFR 3001.9(a) and 3001.10(a).

Further procedures. By statute, the Commission is required to issue its decision within 120 days from the date it receives the appeal. *See* 39 U.S.C. 404(d)(5). A procedural schedule has been developed to accommodate this statutory deadline. In the interest of expedition, in light of the 120-day decision schedule, the Commission may request the Postal Service or other participants to submit information or memoranda of law on any appropriate issue. As required by Commission rules, if any motions are filed, responses are due 7 days after any such motion is filed. *See* 39 CFR 3001.21.

It is ordered:

1. The procedural schedule listed below is hereby adopted.

2. Pursuant to 39 U.S.C. 505, James Callow is designated officer of the Commission (Public Representative) to represent the interests of the general public.

3. The Secretary shall arrange for publication of this notice and order and Procedural Schedule in the **Federal Register.**

By the Commission.

Shoshana M. Grove,

Secretary.

PROCEDURAL SCHEDULE

November 7, 2011	Filing of Appeal.
November 22, 2011	Deadline for the Postal Service to file the applicable administrative record in this appeal.
November 22, 2011	Deadline for the Postal Service to file any responsive pleading.
December 23, 2011	Deadline for notices to intervene (*see* 39 CFR 3001.111(b)).
December 12, 2011	Deadline for Petitioners' Form 61 or initial brief in support of petition (*see* 39 CFR 3001.115(a) and (b)).
January 3, 2012	Deadline for answering brief in support of the Postal Service (*see* 39 CFR 3001.115(c)).
January 18, 2012	Deadline for reply briefs in response to answering briefs (*see* 39 CFR 3001.115(d)).
January 25, 2012	Deadline for motions by any party requesting oral argument; the Commission will schedule oral argument only when it is a necessary addition to the written filings (*see* 39 CFR 3001.116).
February 23, 2012	Expiration of the Commission's 120-day decisional schedule (*see* 39 U.S.C. 404(d)(5)).

[FR Doc. 2011–31035 Filed 12–1–11; 8:45 am]

BILLING CODE 7710–FW–P

SECURITIES AND EXCHANGE COMMISSION

[Release No. 34–65831; File No. SR–DTC–2011–08]

Self-Regulatory Organizations; The Depository Trust Company; Notice of Filing of Proposed Rule Change To Enhance Risk Management Controls Associated With the Receiver Authorized Delivery Function

November 28, 2011.

Pursuant to Section 19(b)(1) of the Securities Exchange Act of 1934 (''Act'')[1] and Rule 19b–4[2] thereunder, notice is hereby given that on November 16, 2011, The Depository Trust Company (''DTC'') filed with the Securities and Exchange Commission (''Commission'') the proposed rule change as described in Items I, II, and III below, which Items have been prepared primarily by DTC. The Commission is publishing this notice to solicit comments on the proposed rule change from interested persons.

I. Self-Regulatory Organization's Statement of the Terms of Substance of the Proposed Rule Change

The proposed rule change would enhance the risk management controls associated with DTC's Receiver Authorized Delivery (''RAD'') function.

II. Self-Regulatory Organization's Statement of the Purpose of, and Statutory Basis for, the Proposed Rule Change

In its filing with the Commission, DTC included statements concerning the purpose of and basis for the proposed rule change and discussed any comments it received on the proposed rule change. The text of these statements may be examined at the places specified in Item IV below. DTC has prepared summaries, set forth in sections A, B, and C below, of the most significant aspects of such statements.

A. Self-Regulatory Organization's Statement of the Purpose of, and Statutory Basis for, the Proposed Rule Change

(1) The RAD function enables each Participant to control and review a Deliver Order (''DO'')[3] or a Payment Order (''PO'')[4] that is directed to its account by another Participant before its account is updated. The RAD function was built in 1990 to route money market instrument (''MMI'') transactions for receiver approval. In 1996, there was a conversion for all transactions to settle in same-day funds subject to the net debit cap control[5] and collateral controls.[6] Any DO that obligated a Participant to pay $15 million or more and any PO that obligated a Participant to pay $1 million or more became subject to RAD. In order to minimize blockage, DTC excluded from RAD any DO under $15 million and any PO under $1 million. Transactions in such lower amounts were directed to the account of the receiving Participant without the RAD filter. For such lower amounts, the receiving Participant has the ability on the same day as the original delivery to instruct a matched

[1] 15 U.S.C. 78s(b)(1).

[2] 17 CFR 240.19b–4.

[3] A Deliver Order is the term used to define an instruction initiating the book-entry transfer of a security from one DTC Participant, as delivering Participant, to another DTC Participant, as receiving Participant.

[4] A Payment Order is the term used to define an instruction initiating a transaction in which a Participant charges another Participant for changes in value for outstanding stock loans or option contract premiums. Payment orders involve no securities, only money.

[5] The net debit cap control is designed so that DTC may complete settlement even if a Participant fails to settle. Before completing a transaction in which a Participant is the receiver, DTC calculates the effect the transaction would have on such Participant's account and determines whether any resulting net debit balance would exceed the Participant's net debit cap. Any transaction that would cause the net debit balance to exceed the Participant's net debit cap is placed on a pending (recycling) queue until another transaction creates sufficient credit in such Participant's account so that the net debit cap will not be exceeded.

[6] An example of a collateral control is the Collateral Monitor (''CM''). DTC tracks collateral in a Participant's account through the Collateral Monitor. At all times, the CM reflects the amount by which the collateral value in the account exceeds the net debit balance in the account. When processing a transaction, DTC verifies that the CM of neither the deliverer nor the receiver will not become negative when the transaction completes. If the transaction would cause either party to have a negative CM, the transaction will recycle until the deficient account has sufficient collateral to proceed or until the applicable cutoff occurs.

reclaim [7] transaction not subject to the original delivering Participant's collateral monitor and net debit cap controls.

With this rule filing, DTC is proposing the following revisions to RAD:

(i) DTC will expand RAD to include Omgeo Institutional Delivery (''ID'') transactions in excess of $15 million at the receiving Participant's election. If no election is made, these transactions will be processed for receipt in the same manner as they currently are processed. (Currently, ID transactions are not routed to RAD and are not subject to matched reclaim.) The change will reduce the receiving Participant's risk relating to ID transactions.

(ii) Participants will be able to elect to have all free MMI deliveries bypass RAD on a counterparty by counterparty basis. Currently, all free money market instrument (''MMI'') deliveries are routed to RAD for receiver approval.[8] The change will help facilitate customer account transfers.

(iii) DTC will be able, in its discretion, to apply RAD to all DOs and POs initiated by a ''Wind-Down Participant'' [9] regardless of value. A receiving Participant will have the option to raise its RAD limit in accordance with its own transaction management objectives (but not to reinstitute matched reclaims in lieu of RAD). DTC views this improvement as a means for Participants, bilaterally, and DTC, multilaterally, to manage liquidity and credit risk in a Wind-Down scenario and to eliminate the risk of matched reclaims to a Wind-Down Participant.

(iv) DTC will exclude from RAD certain receives or deliveries (*e.g.,* the OCC Market Loan program [10] account) because these are effectively matched and/or approved by other mechanisms. DTC also seeks to conform the language of its existing procedures pertaining to processing of reclaims to its practices:

(v) Receiving Participants may, only on the same day as the original delivery, instruct a matched reclaim transaction. Any such matched reclaim of a DO with a settlement value of less than $15 million and a PO with a value less than $1 million may be processed without reference to the collateral monitor and net debit cap controls for the original delivering Participant.[11]

DTC has discussed these changes with selected Participants and with its Settlement Advisory Board which agreed that these enhancements should reduce risk.

These changes will be reflected in revisions to the existing DTC Settlement Services Guide, set forth in the attached Exhibit 5.[12]

(2) The proposed rule change is consistent with the requirements of the Act, and the rules and regulations thereunder applicable to DTC as well as the CPSS/IOSCO Recommendations for Securities Settlement Systems applicable to DTC. The proposed change is designed to facilitate the prompt and accurate settlement of securities transactions by promoting efficiencies and reducing risk in the system.

B. Self-Regulatory Organization's Statement on Burden on Competition

DTC does not believe that the proposed rule change will have any impact or impose any burden on competition.

C. Self-Regulatory Organization's Statement on Comments on the Proposed Rule Change Received From Members, Participants, or Others

Written comments relating to the proposed rule change have not yet been solicited or received. DTC will notify the Commission of any written comments received by DTC.

III. Date of Effectiveness of the Proposed Rule Change and Timing for Commission Action

Within 45 days of the date of publication of this notice in the **Federal Register** or within such longer period (i) as the Commission may designate up to 90 days of such date if it finds such longer period to be appropriate and publishes its reasons for so finding or (ii) as to which the self-regulatory organization consents, the Commission shall: (a) By order approve or disapprove such proposed rule change or (b) institute proceedings to determine whether the proposed rule change should be disapproved.

IV. Solicitation of Comments

Interested persons are invited to submit written data, views, and arguments concerning the foregoing, including whether the proposed rule change is consistent with the Act. Comments may be submitted by any of the following methods:

Electronic Comments

- Use the Commission's Internet comment form (*http://www.sec.gov/rules/sro.shtml*); or
- Send an email to *rule-comments@sec.gov.* Please include File Number SR–DTC–2011–08 on the subject line.

Paper Comments

- Send paper comments in triplicate to Elizabeth M. Murphy, Secretary, Securities and Exchange Commission, 100 F Street NE., Washington, DC 20549–1090.

All submissions should refer to File Number SR–DTC–2011–08. This file number should be included on the subject line if email is used. To help the Commission process and review your comments more efficiently, please use only one method. The Commission will post all comments on the Commission's Internet Web site (*http://www.sec.gov/rules/sro.shtml*). Copies of the submission, all subsequent amendments, all written statements with respect to the proposed rule change that are filed with the Commission, and all written communications relating to the proposed rule change between the Commission and any person, other than those that may be withheld from the public in accordance with the provisions of 5 U.S.C. 552, will be available for Web site viewing and printing in the Commission's Public Reference Room, 100 F Street NE., Washington, DC 20549, on official business days between the hours of 10 a.m. and 3 p.m. Copies of such filing also will be available for inspection and copying at DTC's principal office and on DTC's Web site at *http://www.dtc.org.* All comments received will be posted without change; the Commission does not edit personal identifying information from submissions. You should submit only information that you wish to make available publicly.

All submissions should refer to File Number SR–DTC–2011–08 and should be submitted on or before December 23, 2011.

[7] A ''reclaim'' is a separate DO or PO that a receiving Participant may use to return a DO or PO (typically received in error).

[8] A receiver that authorizes a free MMI transaction is deemed to have made an agreement with the deliverer that it will make payment outside of DTC in accordance with the agreement of the parties outside DTC. DTC does not monitor or enforce compliance with such agreements. Participants must enforce these agreements themselves.

[9] DTC Rule 32 defines a ''Wind-Down Participant'' and provides for actions that may be taken with respect to such a Participant.

[10] For more information about the OCC's Market Loan Program, see Securities Exchange Release Act No. 34–59298 (January 26, 2009) 74 FR 5692 (January 30, 2009) [SR–DTC–2008–15].

[11] For more information regarding this change, see Securities Exchange Release Act No. 34–48121 (July 2, 2003) 68 FR 41030 (July 2, 2003) [SR–DTC–2003–06].

[12] The text of the proposed rule change is available on DTC's Web site at *http://www.dtcc.com/legal/rule_filings/dtc/2011.php.*

For the Commission, by the Division of Trading and Markets, pursuant to delegated authority.[13]

Kevin M. O'Neill,

Deputy Secretary.

[FR Doc. 2011–30980 Filed 12–1–11; 8:45 am]

BILLING CODE 8011–01–P

SECURITIES AND EXCHANGE COMMISSION

[Release No. 34–65832; File No. SR–Phlx–2011–159]

Self-Regulatory Organizations; NASDAQ OMX PHLX LLC; Notice of Filing and Immediate Effectiveness of Proposed Rule Change To Delay Implementation of a Recently Effective Modification to the Operation of the Minimum Quantity Order on the NASDAQ OMX PSX

November 28, 2011.

Pursuant to Section 19(b)(1) of the Securities Exchange Act of 1934 (''Act''),[1] and Rule 19b–4 thereunder,[2] notice is hereby given that on November 23, 2011, NASDAQ OMX PHLX LLC (''Phlx'') filed with the Securities and Exchange Commission (''Commission'') the proposed rule change as described in Items I, II, and III below, which Items have been prepared by Phlx. The Commission is publishing this notice to solicit comments on the proposed rule change from interested persons.

I. Self-Regulatory Organization's Statement of the Terms of Substance of the Proposed Rule Change

Phlx is filing this proposed rule change to delay implementation of a recently effective modification to the operation of the Minimum Quantity Order on the NASDAQ OMX PSX (''PSX'') system. Phlx proposes to implement the rule change prior to December 31, 2011. The text of the proposed rule change is available at *http://nasdaqomxphlx.cchwallstreet.com/nasdaqomxphlx/phlx,* at Phlx's principal office, and at the Commission's Public Reference Room.

II. Self-Regulatory Organization's Statement of the Purpose of, and Statutory Basis for, the Proposed Rule Change

In its filing with the Commission, the Exchange included statements concerning the purpose of and basis for the proposed rule change and discussed any comments it received on the proposed rule change. The text of these statements may be examined at the places specified in Item IV below. The Exchange has prepared summaries, set forth in Sections A, B, and C below, of the most significant aspects of such statements.

A. Self-Regulatory Organization's Statement of the Purpose of, and Statutory Basis for, the Proposed Rule Change

1. Purpose

Phlx recently submitted a filing to modify the functionality of its Minimum Quantity Order.[3] In the filing, Phlx stated that it expected to implement the modification on or before November 30, 2011. Due to delays in programming the change for use on PSX, Phlx is delaying implementation of the change until December, likely on December 19, 2011. If Phlx does not implement the proposed rule change by December 31, 2011, Phlx will submit a further proposed rule change to reflect such delay.[4]

2. Statutory Basis

Phlx believes that the proposed rule change is consistent with the provisions of Section 6 of the Act,[5] in general, and with Section 6(b)(5) of the Act,[6] in particular, in that the proposal is designed to prevent fraudulent and manipulative acts and practices, to promote just and equitable principles of trade, to foster cooperation and coordination with persons engaged in regulating, clearing, settling, processing information with respect to, and facilitating transactions in securities, to remove impediments to and perfect the mechanism of a free and open market and a national market system, and, in general, to protect investors and the public interest. Specifically, Phlx believes that the change to the functioning of the Minimum Quantity Order will provide market participants with better control over their trading patterns, thereby providing them with greater potential to improve the quality of their order executions. Phlx further believes that the delayed implementation date of the change will have no material impact on market participants.

B. Self-Regulatory Organization's Statement on Burden on Competition

Phlx does not believe that the proposed rule change will result in any burden on competition that is not necessary or appropriate in furtherance of the purposes of the Act, as amended.

C. Self-Regulatory Organization's Statement on Comments on the Proposed Rule Change Received From Members, Participants, or Others

Written comments were neither solicited nor received.

III. Date of Effectiveness of the Proposed Rule Change and Timing for Commission Action

The foregoing rule change has become effective pursuant to Section 19(b)(3)(A) of the Act[7] and paragraph (f)(1) of Rule 19b–4 thereunder.[8]

At any time within 60 days of the filing of the proposed rule change, the Commission summarily may temporarily suspend such rule change if it appears to the Commission that such action is necessary or appropriate in the public interest, for the protection of investors, or otherwise in furtherance of the purposes of the Act. If the Commission takes such action, the Commission shall institute proceedings to determine whether the proposed rule change should be approved or disapproved.

IV. Solicitation of Comments

Interested persons are invited to submit written data, views, and arguments concerning the foregoing, including whether the proposed rule change is consistent with the Act. Comments may be submitted by any of the following methods:

Electronic Comments

- Use the Commission's Internet comment form (*http://www.sec.gov/rules/sro.shtml*); or
- Send an email to *rule-comments@sec.gov.* Please include File Number SR–Phlx–2011–159 on the subject line.

Paper Comments

- Send paper comments in triplicate to Elizabeth M. Murphy, Secretary, Securities and Exchange Commission, 100 F Street NE., Washington, DC 20549–1090.

All submissions should refer to File Number SR–Phlx–2011–159. This file

[13] 17 CFR 200.30–3(a)(12).

[1] 15 U.S.C. 78s(b)(1).

[2] 17 CFR 240.19b–4.

[3] Securities Exchange Act Release No. 65537 (October 12, 2011), 76 FR 64401 (October 18, 2011) (SR–Phlx–2011–132).

[4] Similar change to the Minimum Quantity Order type offered by The NASDAQ Stock Market LLC and NASDAQ OMX BX, Inc. were implemented on November 14, 2011. *See* Securities Exchange Act Release No. 65536 (October 12, 2011), 76 FR 64411 (October 18, 2011) (SR–NASDAQ–2011–140); Securities Exchange Act Release No. 65535 (October 12, 2011), 76 FR 64416 (October 18, 2011) (SR–BX–2011–069).

[5] 15 U.S.C. 78f.

[6] 15 U.S.C. 78f(b)(5).

[7] 15 U.S.C. 78s(b)(3)(A).

[8] 17 CFR 240.19b–4(f)(1).

number should be included on the subject line if email is used. To help the Commission process and review your comments more efficiently, please use only one method. The Commission will post all comments on the Commission's Internet Web site (*http://www.sec.gov/rules/sro.shtml*).

Copies of the submission, all subsequent amendments, all written statements with respect to the proposed rule change that are filed with the Commission, and all written communications relating to the proposed rule change between the Commission and any person, other than those that may be withheld from the public in accordance with the provisions of 5 U.S.C. 552, will be available for Web site viewing and printing in the Commission's Public Reference Room, 100 F Street NE., Washington, DC 20549, on official business days between the hours of 10 a.m. and 3 p.m. Copies of the filing also will be available for inspection and copying at the principal office of the Exchange. All comments received will be posted without change; the Commission does not edit personal identifying information from submissions. You should submit only information that you wish to make available publicly. All submissions should refer to File Number SR–Phlx–2011–159 and should be submitted on or before December 23, 2011.

For the Commission, by the Division of Trading and Markets, pursuant to delegated authority.[9]

Kevin M. O'Neill,

Deputy Secretary.

[FR Doc. 2011–30981 Filed 12–1–11; 8:45 am]

BILLING CODE 8011–01–P

[9] 17 CFR 200.30–3(a)(12).

SECURITIES AND EXCHANGE COMMISSION

[Release No. 34–65840; File No. SR–BX–2011–071]

Self-Regulatory Organizations; NASDAQ OMX BX, Inc.; Order Approving Proposed Rule Change With Respect to an Amendment to the By-Laws of The NASDAQ OMX Group, Inc.

November 28, 2011.

On October 11, 2011, NASDAQ OMX BX, Inc. (''Exchange'') filed with the Securities and Exchange Commission (''Commission''), pursuant to Section 19(b)(1) of the Securities Exchange Act of 1934 (''Act'')[1] and Rule 19b–4 thereunder,[2] a proposed rule change to amend the by-laws of its parent corporation, The NASDAQ OMX Group, Inc. (''NASDAQ OMX''). The proposed rule change was published for comment in the **Federal Register** on October 28, 2011.[3] The Commission received no comments on the proposal.

After careful review, the Commission finds that the proposed rule change is consistent with the requirements of the Act and the rules and regulations thereunder applicable to a national securities exchange[4] and, in particular, the requirements of Section 6(b)(5) of the Act.[5] The proposal will allow the NASDAQ OMX Board of Directors (''Board'') to determine the size of its Audit Committee, so long as the Audit Committee includes at least three directors, as well as the size of its Nominating & Governance Committee, so long as the Nominating & Governance Committee includes at least two directors. The proposal is intended to provide greater flexibility to the NASDAQ OMX Board to determine the appropriate size for these committees. The Commission notes that the proposed rule change maintains compliance with the Exchange's listing standards. The proposal does not change any other compositional requirements of either the Audit Committee or the Nominating & Governance Committee, including independence requirements. Moreover, the Commission notes that the proposal does not alter the application of Section 10A of the Exchange Act[6] and Rule 10A–3 thereunder[7] to the NASDAQ OMX Audit Committee. The proposal also deletes an obsolete section from, and corrects a typographical error in, the NASDAQ OMX by-laws, which are clarifying revisions. For the foregoing reasons, the Commission believes that the proposed rule change is consistent with the Act.

It is therefore ordered, pursuant to Section 19(b)(2) of the Act,[8] that the proposed rule change (SR–BX–2011–071) be, and it hereby is, approved.

For the Commission, by the Division of Trading and Markets, pursuant to delegated authority.[9]

Kevin M. O'Neill,

Deputy Secretary.

[FR Doc. 2011–30982 Filed 12–1–11; 8:45 am]

BILLING CODE 8011–01–P

[1] 15 U.S.C. 78s(b)(1).

[2] 17 CFR 240.19b–4.

[3] *See* Securities Exchange Act Release No. 65603 (October 21, 2011), 76 FR 67013.

[4] In approving this proposed rule change, the Commission has considered the proposed rule's impact on efficiency, competition, and capital formation. *See* 15 U.S.C. 78c(f).

[5] 15 U.S.C. 78f(b)(5).

[6] 15 U.S.C. 78j–1.

[7] 17 CFR 240.10A–3.

[8] 15 U.S.C. 78s(b)(2).

[9] 17 CFR 200.30–3(a)(12).

SECURITIES AND EXCHANGE COMMISSION

[Release No. 34–65845; File No. SR–NYSE–2011–59]

Self-Regulatory Organizations; New York Stock Exchange LLC; Notice of Filing and Immediate Effectiveness of Proposed Rule Change Amending Its Listed Company Manual To Apply Listing and Annual Fees to Foreign Private Issuers of Certain Debt Securities

November 28, 2011.

Pursuant to Section 19(b)(1) of the Securities Exchange Act of 1934 (the ''Act'')[1] and Rule 19b–4 thereunder,[2] notice is hereby given that, on November 18, 2011, the New York Stock Exchange LLC (''NYSE'' or the ''Exchange'') filed with the Securities and Exchange Commission (the ''Commission'') the proposed rule change as described in Items I, II, and III below, which Items have been prepared by the Exchange. The Commission is publishing this notice to solicit comments on the proposed rule change from interested persons.

I. Self-Regulatory Organization's Statement of the Terms of Substance of the Proposed Rule Change

The Exchange proposes to amend the Listed Company Manual to include a fee that it believes was inadvertently omitted. In particular, the Exchange proposes to apply Listing and Annual fees to foreign private issuers of debt securities listed under Section 103.05 of the Listed Company Manual. The text of the proposed rule change is available at the Exchange, the Commission's Public Reference Room, and *http://www.nyse.com.*

II. Self-Regulatory Organization's Statement of the Purpose of, and Statutory Basis for, the Proposed Rule Change

In its filing with the Commission, the self-regulatory organization included statements concerning the purpose of, and basis for, the proposed rule change and discussed any comments it received

[1] 15 U.S.C. 78s(b)(1).

[2] 17 CFR 240.19b–4.

on the proposed rule change. The text of those statements may be examined at the places specified in Item IV below. The Exchange has prepared summaries, set forth in sections A, B, and C below, of the most significant parts of such statements.

A. Self-Regulatory Organization's Statement of the Purpose of, and the Statutory Basis for, the Proposed Rule Change

1. Purpose

NYSE proposes to amend the Listed Company Manual to include a fee that it believes was inadvertently omitted. In particular, the Exchange proposes to apply Listing and Annual Fees to foreign private issuers of debt securities listed under Section 103.05 of the Listed Company Manual.

Debt Securities Listed Under Section 102.03 or 103.05

Under Section 102.03 of the Listed Company Manual, a debt security for a domestic company may be listed on the Exchange if it has an aggregate market value or principal amount of no less than $5,000,000 and meets certain other requirements.[3] Under Section 103.05, a debt security of a foreign private issuer also may be listed on the Exchange if it has an aggregate market value or principal amount of no less than $5,000,000 and meets certain requirements substantially similar to those applicable to a domestic debt security.[4]

The Listing and Annual Fees for debt securities listed under Section 102.03 are set forth in Section 902.08. For the non-listed debt securities of NYSE equity issuers and affiliated companies, and for the domestic debt securities of issuers exempt from registration under [sic] Securities and Exchange Act of 1934 (the ''Act''), no fees are charged. For the listed debt securities of NYSE equity issuers and affiliated companies, an initial Listing Fee of $5,000 and an Annual Fee of $5,000 are charged. For all other debt securities listed under Section 102.03, an initial Listing Fee of $5,000 and an Annual Fee of $5,000 are charged.

Under Section 902.02, certain Listing and Annual Fees that may be billed to an issuer in a calendar year are currently capped at $500,000. Listing and Annual Fees for securities listed under Section 102.03 are currently subject to the $500,000 cap in Section 902.02.

The Exchange proposes to amend Section 902.08 to make it also applicable to debt securities listed under Section 103.05; the Exchange believes that such a reference to Section 103.05 was inadvertently omitted because the Exchange intended to treat these similarly situated securities in the same way for fee purposes. The Exchange believes that there is no substantial difference between the listing support, regulatory, and administrative activities that must be carried out for securities listed under Section 102.03 or 103.05 and accordingly these securities should be charged the same fees.[5]

2. Statutory Basis

The Exchange believes that the proposed rule change is consistent with the provisions of Section 6(b) of the Securities Exchange Act of 1934 (the ''Act''),[6] in general, and Section 6(b)(4) of the Act,[7] in particular, in that it is designed to provide for the equitable allocation of reasonable dues, fees, and other charges among its members and other persons using its facilities. The Exchange believes that the proposed fees for foreign private issuers of debt are reasonable and equitably allocated because they are the same fees that are charged to issuers of domestic debt listed under substantially the same criteria. The Exchange engages in the same listing support, regulatory, and administrative activities for domestic securities listed under Section 102.03 as it does for foreign securities listed under Section 103.05.

B. Self-Regulatory Organization's Statement on Burden on Competition

The Exchange does not believe that the proposed rule change will impose any burden on competition that is not necessary or appropriate in furtherance of the purposes of the Act.

C. Self-Regulatory Organization's Statement on Comments on the Proposed Rule Change Received From Members, Participants, or Others

No written comments were solicited or received with respect to the proposed rule change.

III. Date of Effectiveness of the Proposed Rule Change and Timing for Commission Action

The foregoing rule change is effective upon filing pursuant to Section 19(b)(3)(A)[8] of the Act and subparagraph (f)(2) of Rule 19b–4[9] thereunder, because it establishes a due, fee, or other charge imposed by the Exchange. At any time within 60 days of the filing of such proposed rule change, the Commission summarily may temporarily suspend such rule change if it appears to the Commission that such action is necessary or appropriate in the public interest, for the protection of investors, or otherwise in furtherance of the purposes of the Act.

IV. Solicitation of Comments

Interested persons are invited to submit written data, views, and arguments concerning the foregoing, including whether the proposed rule change is consistent with the Act. Comments may be submitted by any of the following methods:

Electronic Comments

- Use the Commission's Internet comment form (*http://www.sec.gov/rules/sro.shtml*); or
- Send an email to *rule-comments@sec.gov.* Please include File Number SR–NYSE–2011–59 on the subject line.

Paper Comments

- Send paper comments in triplicate to Elizabeth M. Murphy, Secretary, Securities and Exchange Commission, 100 F Street NE., Washington, DC 20549–1090.

All submissions should refer to File Number SR–NYSE–2011–59. This file number should be included on the subject line if email is used. To help the Commission process and review your comments more efficiently, please use only one method. The Commission will post all comments on the Commission's Internet Web site (*http://www.sec.gov/rules/sro.shtml*). Copies of the submission, all subsequent amendments, all written statements

[3] The debt security must be characterized by one of the following conditions: (a) The issuer of the debt security has equity securities listed on the Exchange; (b) an issuer of equity securities listed on the Exchange directly or indirectly owns a majority interest in, or is under common control with, the issuer of the debt security; (c) an issuer of equity securities listed on the Exchange has guaranteed the debt security; (d) a nationally recognized securities rating organization (''NRSRO'') has assigned a current rating to the debt security that is no lower than an S&P Corporation ''B'' rating or an equivalent rating by another NRSRO; or (e) if no NRSRO has assigned a rating to the issue, an NRSRO has currently assigned (i) an investment grade rating to a senior issue, or (ii) a rating that is no lower than an S&P Corporation ''B'' rating, or an equivalent rating by another NRSRO, to a *pari passu* or junior issue.

[4] The only difference in the requirements is that under Section 102.03, a convertible debt issue must have an aggregate market value or principal amount of no less than $10,000,000 and may be listed only if the underlying equity securities are subject to real-time last sale reporting in the United States.

[5] Like securities listed under Section 102.03, Listing and Annual Fees for securities listed under Section 103.05 would be subject to the $500,000 cap in Section 902.02.

[6] 15 U.S.C. 78f(b).

[7] 15 U.S.C. 78f(b)(4).

[8] 15 U.S.C. 78s(b)(3)(A).

[9] 17 CFR 240.19b–4(f)(2).

with respect to the proposed rule change that are filed with the Commission, and all written communications relating to the proposed rule change between the Commission and any person, other than those that may be withheld from the public in accordance with the provisions of 5 U.S.C. 552, will be available for inspection and copying in the Commission's Public Reference Section, 100 F Street NE., Washington, DC 20549–1090. Copies of the filing will also be available for inspection and copying at the NYSE's principal office and on its Internet Web site at *http://www.nyse.com.* All comments received will be posted without change; the Commission does not edit personal identifying information from submissions. You should submit only information that you wish to make available publicly. All submissions should refer to File Number SR–NYSE–2011–59 and should be submitted on or before December 23, 2011.

For the Commission, by the Division of Trading and Markets, pursuant to delegated authority.[10]

Kevin M. O'Neill,

Deputy Secretary.

[FR Doc. 2011–30983 Filed 12–1–11; 8:45 am]

BILLING CODE 8011–01–P

[10] 17 CFR 200.30–3(a)(12).

SECURITIES AND EXCHANGE COMMISSION

[Release No. 34–65835; File No. SR–CBOE–2011–105]

Self-Regulatory Organizations; Chicago Board Options Exchange, Incorporated; Notice of Filing and Immediate Effectiveness of a Proposed Rule Change Relating to Market-Makers' Continuous Electronic Quoting Obligations and Adjusted Option Series

November 28, 2011.

Pursuant to Section 19(b)(1) of the Securities Exchange Act of 1934 (the ''Act''),[1] and Rule 19b–4 thereunder,[2] notice is hereby given that on November 18, 2011, the Chicago Board Options Exchange, Incorporated (the ''Exchange'' or ''CBOE'') filed with the Securities and Exchange Commission (the ''Commission'') the proposed rule change as described in Items I, II and III below, which Items have been prepared by the Exchange. The Exchange filed the proposal as a ''non-controversial'' proposed rule change pursuant to Section 19(b)(3)(A)(iii) of the Act[3] and Rule 19b–4(f)(6)[4] thereunder. The Commission is publishing this notice to solicit comments on the proposed rule change from interested persons.

[1] 15 U.S.C. 78s(b)(1).

[2] 17 CFR 240.19b–4.

[3] 15 U.S.C. 78s(b)(3)(A)(iii).

[4] 17 CFR 240.19b–4(f)(6).

I. Self-Regulatory Organization's Statement of the Terms of Substance of the Proposed Rule Change

The Exchange proposes to amend its rules to indicate that Market-Makers will not be obligated to maintain continuous electronic quotes in adjusted option series and to define the term adjusted option series. The text of the proposed rule change is available on the Exchange's Web site (*http://www.cboe.com/AboutCBOE/CBOELegalRegulatoryHome.aspx*), at the Exchange's Office of the Secretary, and at the Commission's Public Reference Room.

II. Self-Regulatory Organization's Statement of the Purpose of, and Statutory Basis for, the Proposed Rule Change

In its filing with the Commission, the Exchange included statements concerning the purpose of and basis for the proposed rule change and discussed any comments it received on the proposed rule change. The text of those statements may be examined at the places specified in Item IV below. The Exchange has prepared summaries, set forth in sections A, B, and C below, of the most significant parts of such statements.

A. Self-Regulatory Organization's Statement of the Purpose of, and the Statutory Basis for, the Proposed Rule Change

1. Purpose

CBOE proposes to amend its rules to indicate that Market-Makers will not be obligated to maintain continuous electronic quotes in adjusted option series and to define the term adjusted option series. The proposal is based on recent rule changes of NYSE Amex LLC (''NYSE Amex''), NYSE Arca, Inc. (''NYSE Arca'') and NASDAQ OMX PHLX, Inc. (''PHLX'').[5]

Rules 8.7, 8.13, 8.15A, 8.85, and 8.93 impose certain obligations on Market-Makers, Preferred Market-Makers, Lead Market-Makers (''LMMs''), Designated Primary Market-Makers (''DPMs''), and electronic-DPMs (''e-DPMs''), respectively (collectively, ''Market-Makers'').

These rules require that Market-Makers maintain continuous electronic quotes[6] as follows:

- Rule 8.7(d)(ii)(B) requires that Market-Makers maintain continuous electronic quotes in 60% of the series of the Market-Maker's appointed class that have a time to expiration of less than nine months;
- Rule 8.13(d) requires that Preferred Market-Makers, among other things, provide continuous electronic quotes in at least 90% of the series of each class for which it receives Preferred Market-Maker orders;
- Rule 8.15A(b)(i) requires that LMMs provide continuous electronic quotes that comply with the bid/ask differential requirements determined by the Exchange on a class-by-class basis in 90% of the option series within their assigned classes;[7]
- Rule 8.85(a)(i) requires DPMs to provide continuous electronic quotes in at least 90% of the series of each multiply listed option class allocated to it and in 100% of the series of each singly listed option class allocated to it; and
- Rule 8.93 requires that e-DPMs provide continuous electronic quotes in at least 90% of the series of each allocated class.[8]

The Exchange proposes to relieve Market-Makers of the obligation to

[5] *See* Securities Exchange Act Release Nos. 65572 (October 14, 2011), 76 FR 65310 (October 20, 2011) (SR–NYSEAmex-2011–61) (order granting approval of proposed rule change concerning market maker continuous quoting obligations and adjusted option series); 65573 (October 14, 2011), 76 FR 65305 (October 20, 2011) (SR–NYSEArca-2011–59) (order granting approval of proposed rule change concerning market maker continuous quoting obligations and adjusted option series); and 61095 (December 2, 2009), 74 FR 64786 (December 8, 2009 (SR–PHLX–2009–99).

[6] Rule 1.1(ccc) provides that a Market-Maker who is obligated to provide continuous electronic quotes on CBOE's Hybrid Trading System will be deemed to have provided ''continuous electronic quotes'' if the Market-Maker provides electronic two-sided quotes for 99% of the time that the Market-Maker is required to provide electronic quotes in an appointed option class on a given trading day. The rule also provides that if a technical failure or limitation of a system of the Exchange prevents the Market-Maker from maintaining, or prevents the Market-Maker from communicating to the Exchange, timely and accurate electronic quotes in a class, the duration of such failure will not be considered in determining whether the Market-Maker has satisfied the 99% quoting standard with respect to that option class. The Exchange may consider other exceptions to this continuous electronic quote obligation based on demonstrated legal or regulatory requirements or other mitigating circumstances.

[7] This rule also provides that in option classes in which both an on-floor LMM and an off-floor LMM have been appointed, the on-floor LMM will only be obligated to comply with obligations of Market-Makers in hybrid classes set forth in Rule 8.7(d).

[8] Alternatively, an e-DPM must provide continuous electronic quotes in at least 98% of requests for quotes if such functionality is enabled as determined by the Exchange.

maintain continuous electronic quotes in adjusted option series. The proposal adds Rule 1.1(lll) to define ''adjusted option series'' as an option series for which, as a result of a corporate action by the issuer of the security underlying such option series, one option contract in the series represents the delivery of other than 100 shares of underlying stock or Units.[9] The proposal also amends the rules discussed above that impose continuous electronic quoting obligations on Market-Makers to provide that such quoting obligations only apply to non-adjusted option series.

After a corporate action and a subsequent adjustment to the existing options, the series in question are identified by the Options Price Reporting Authority and at the Options Clearing Corporation with a separate symbol consisting of the underlying symbol and a numerical appendage. As a standard procedure, exchanges listing options on an underlying security that undergoes a corporate action resulting in adjusted series will list new standard option series across all appropriate expiration months the day after the existing series are adjusted. The adjusted series are generally actively traded for a short period of time following adjustment, but orders to open options positions in the underlying security are almost exclusively placed in the new standard option series contracts. Although the adjusted series may not expire for a long period of time, in a short time the adjusted series are no longer actively traded. Thus, the burden of quoting these series generally outweighs the benefit of being appointed in the class because of the lack of interest in the series by various market participants.

The Exchange notes that other options exchanges have indicated that market-makers have recently withdrawn from assignments in classes that include adjusted series, resulting in a reduction in liquidity in these classes. These market-makers informed the exchanges that the withdrawals were based in part on their obligation to continuously quote adjusted option series, and the quoting obligations on these often less frequently traded option series impacted the risk parameters acceptable to the market-makers. These options exchanges also noted that market-makers also expressed concern that the adjusted nature of these series complicates the calculation of an appropriate quote. As a result of withdrawals from such assignments by market-makers, these options exchanges stated that liquidity, as well as volume, had been negatively impacted in the affected options classes listed on the exchanges.[10] The Exchange believes that this proposal will prevent any similar withdrawals by CBOE Market-Makers from assignments in classes that include adjusted option series on the Exchange, and thus any potential reduction in liquidity and volume related to the withdrawals, and encourage Market-Makers to continue their appointments in these option classes.

In support of this proposal, the Exchange notes that this proposed rule change is similar to recent rule changes of NYSE Amex, NYSE Arca and PHLX.[11] The Exchange is merely proposing to exclude adjusted option series from Market-Makers' continuous electronic quoting obligations, but not from other obligations imposed on Market-Makers pursuant to Rules 8.7, 8.13, 8.15A, 8.85, and 8.93. In particular, the proposed rule change would not excuse a Market-Maker from its obligation to provide a two-sided market complying with the bid/ask differential requirements in response to any request for quote by a floor broker, Trading Permit Holder or PAR Official.[12] The proposed rule change would also not excuse a Market-Maker from its obligation to provide an open outcry two-sided market complying with the bid/ask differential requirements in response to a request for a quote by a Trading Permit Holder or PAR Official directed at that Market-Maker or when, in response to a general request for a quote by a Trading Permit Holder or PAR Official, a market is not then being vocalized by a reasonable number of Market-Makers.[13] Further, the proposed rule change would not excuse a Market-Maker from its obligation to submit a single quote or maintain continuous quotes in one or more series of a class to which the Market-Maker is appointed when called upon by an Exchange official if, in the judgment of such official, it is necessary to do so in the interest of maintaining a fair and orderly market.[14]

The current quoting obligation in these illiquid adjusted option series is a minor part of a Market-Maker's overall obligation, and the proposed relief is mitigated by a Market-Maker's obligation to respond to a request for quote by a floor broker, Trading Permit Holder or PAR Official. Because of the lack of interest in these adjusted option series, there is little demonstrable benefit to being a Market-Maker in them other than the ability to maintain Market-Maker margins for what little activity may occur. In addition, the burden of continuous electronic quoting in these series is counter to the Exchange's efforts to mitigate the number of quotes collected and disseminated.

The Exchange believes that the proposed rule change should incent Market-Makers to continue appointments, and as a result expand liquidity, in options classes listed on the Exchange to the benefit of the Exchange and its Trading Permit Holders and public customers. The Exchange believes that its Market-Makers would be disadvantaged if they are required to continuously electronically quote in these illiquid adjusted option series, and the Exchange's Trading Permit Holders and public customers would also be disadvantaged if Market-Makers withdrew from appointments in options classes that include adjusted option series, resulting in reduced liquidity and volume in these classes.

2. *Statutory Basis*

The Exchange believes the proposed rule change is consistent with Section 6 of the Act[15] and the rules and regulations thereunder and, in particular, the requirements of Section 6(b) of the Act.[16] Specifically, the Exchange believes the proposed rule change is consistent with the Section 6(b)(5)[17] requirements that the rules of an exchange be designed to promote just and equitable principles of trade, to prevent fraudulent and manipulative acts, to remove impediments to and to perfect the mechanism for a free and open market and a national market system, and, in general, to protect investors and the public interest.

In particular, the Exchange believes this proposed rule change is consistent with the Act because, on balance, the elimination of the continuous electronic quoting obligations in adjusted option series is a minor change and should not impact the quality of CBOE's trading markets. Among other things, adjusted option series are not common, and trading interest is often very low after the corporate event has passed. Consequently, continuous electronic

[9] ''Units'' are securities other than shares that are traded on a national securities exchange and are defined as an ''NMS stock'' under Rule 600 of Regulation NMS and that meet the other requirements set forth in Rule 5.3, Interpretation and Policy .06.

[10] *See supra* note 5.

[11] *Id.*

[12] *See* Rule 8.7(d)(i)(C) (relating to a request for quote by a floor broker) and (ii)(C) (relating to a request for a quote by a Trading Permit Holder or PAR Official).

[13] *See* Rule 8.7(d)(iv).

[14] *Id.*

[15] 15 U.S.C. 78f.

[16] 15 U.S.C. 78f(b).

[17] 15 U.S.C. 78f(b)(5).

quotes in these series increase quote traffic and burdens systems without a corresponding benefit. By not requiring Market-Makers to provide continuous electronic quotes in these series, the Exchange's proposal would further its goal of measured quote mitigation. Further, while they will not be tasked with providing continuous electronic quotes in these series, Market-Makers must still quote these series when requested by a floor broker, Trading Permit Holder or PAR Official. Accordingly, the proposal supports the quality of CBOE's trading markets by helping to ensure that Market-Makers will continue to be obligated to quote in adjusted option series if and when the need arises.

These changes are consistent with the rules of competing options exchanges, and they serve to remove impediments to and to perfect the mechanism for a free and open market and a national market system.

B. Self-Regulatory Organization's Statement on Burden on Competition

CBOE does not believe that the proposed rule change will impose any burden on competition not necessary or appropriate in furtherance of the purposes of the Act. In this regard, and as indicated above, the Exchange notes that the rule change is being proposed as a competitive response to recent rule changes of NYSE Amex, NYSE Arca and PHLX.[18] CBOE believes this proposed rule change is necessary to permit fair competition among the options exchanges with respect to Market-Makers' continuous electronic quoting obligations.

C. Self-Regulatory Organization's Statement on Comments on the Proposed Rule Change Received From Members, Participants, or Others

No written comments were solicited or received with respect to the proposed rule change.

III. Date of Effectiveness of the Proposed Rule Change and Timing for Commission Action

Because the proposed rule change does not (i) significantly affect the protection of investors or the public interest; (ii) impose any significant burden on competition; and (iii) become operative for 30 days from the date on which it was filed, or such shorter time as the Commission may designate if consistent with the protection of investors and the public interest, provided that the self-regulatory organization has given the Commission written notice of its intent to file the proposed rule change at least five business days prior to the date of filing of the proposed rule change or such shorter time as designated by the Commission, the proposed rule change has become effective pursuant to Section 19(b)(3)(A) of the Act[19] and Rule 19b–4(f)(6)[20] thereunder.

At any time within 60 days of the filing of such proposed rule change, the Commission summarily may temporarily suspend such rule change if it appears to the Commission that such action is necessary or appropriate in the public interest, for the protection of investors, or otherwise in furtherance of the purposes of the Act.

IV. Solicitation of Comments

Interested persons are invited to submit written data, views, and arguments concerning the foregoing, including whether the proposed rule change is consistent with the Act. Comments may be submitted by any of the following methods:

Electronic Comments

- Use the Commission's Internet comment form (*http://www.sec.gov/rules/sro.shtml*); or
- Send an email to *rule-comments@sec.gov.* Please include File Number SR–CBOE–2011–105 on the subject line.

Paper Comments

- Send paper comments in triplicate to Elizabeth M. Murphy, Secretary, Securities and Exchange Commission, 100 F Street NE., Washington, DC 20549–1090.

All submissions should refer to File Number SR–CBOE–2011–105. This file number should be included on the subject line if email is used. To help the Commission process and review your comments more efficiently, please use only one method. The Commission will post all comments on the Commission's Internet Web site (*http://www.sec.gov/rules/sro.shtml*). Copies of the submission, all subsequent amendments, all written statements with respect to the proposed rule change that are filed with the Commission, and all written communications relating to the proposed rule change between the Commission and any person, other than those that may be withheld from the public in accordance with the provisions of 5 U.S.C. 552, will be available for Web site viewing and printing in the Commission's Public Reference Room, 100 F Street NE., Washington, DC 20549, on official business days between the hours of 10 a.m. and 3 p.m. Copies of the filing also will be available for inspection and copying at the principal office of the Exchange. All comments received will be posted without change; the Commission does not edit personal identifying information from submissions. You should submit only information that you wish to make available publicly. All submissions should refer to File Number SR–CBOE–2011–105 and should be submitted on or before December 23, 2011.

For the Commission, by the Division of Trading and Markets, pursuant to delegated authority.[21]

Kevin M. O'Neill,

Deputy Secretary.

[FR Doc. 2011–30996 Filed 12–1–11; 8:45 am]

BILLING CODE 8011–01–P

[18] *See supra* note 5.

[19] 15 U.S.C. 78s(b)(3)(A).

[20] 17 CFR 240.19b–4(f)(6). In addition, Rule 19b–4(f)(6) requires a self-regulatory organization to give the Commission written notice of its intent to file the proposed rule change at least five business days prior to the date of filing of the proposed rule change, or such shorter time as designated by the Commission. The Exchange has satisfied this requirement.

[21] 17 CFR 200.30–3(a)(12).

SECURITIES AND EXCHANGE COMMISSION

[Release No. 34–65843; File No. SR–CBOE–2011–107]

Self-Regulatory Organizations; Chicago Board Options Exchange, Incorporated; Notice of Filing of Proposed Rule Change Amending and Restating the CBSX Operating Agreement and Adopting Rule 2.50

November 28, 2011.

Pursuant to Section 19(b)(1) of the Securities Exchange Act of 1934 (the ''Act''),[1] and Rule 19b–4 thereunder,[2] notice is hereby given that on November 28, 2011, the Chicago Board Options Exchange, Incorporated (the ''Exchange'' or ''CBOE'') filed with the Securities and Exchange Commission (the ''Commission'') the proposed rule change as described in Items I and II below, which Items have been prepared by the Exchange. The Commission is publishing this notice to solicit comments on the proposed rule change from interested persons.

I. Self-Regulatory Organization's Statement of the Terms of Substance of the Proposed Rule Change

The Exchange proposes to amend and restate the Second Amended and

[1] 15 U.S.C. 78s(b)(1).

[2] 17 CFR 240.19b–4.

Restated Operating Agreement (''Operating Agreement'') of CBOE Stock Exchange, LLC (''CBSX'') and adopt new Rule 2.50 in connection with CBSX's proposed acquisition (the ''Transaction'') of the National Stock Exchange, Inc. (''NSX''). The text of the proposed rule change is available on the Exchange's Web site (*http://www.cboe.com/AboutCBOE/CBOELegalRegulatoryHome.aspx*), at the Exchange's Office of the Secretary, the Commission's Public Reference Room, and on the Commission's Web site at *http://www.sec.gov.*

II. Self-Regulatory Organization's Statement of the Purpose of, and Statutory Basis for, the Proposed Rule Change

In its filing with the Commission, the self-regulatory organization included statements concerning the purpose of and basis for the proposed rule change and discussed any comments it received on the proposed rule change. The text of those statements may be examined at the places specified in Item IV below. The Exchange has prepared summaries, set forth in sections A, B, and C below, of the most significant parts of such statements.

A. Self-Regulatory Organization's Statement of the Purpose of, and Statutory Basis for, the Proposed Rule Change

1. Purpose

a. Transaction

Currently, NSX is wholly and directly owned by NSX Holdings, Inc. (''NSX Holdings''). Under a Purchase Agreement (the ''Purchase Agreement'') dated September 28, 2011 by and between NSX, NSX Holdings and CBSX, CBSX will acquire all of the outstanding capital stock of NSX on the date of or after all conditions precedent to closing [3] have been satisfied or waived, including approval by the Commission of this proposed rule change.

Following the Transaction, NSX will be a wholly owned subsidiary of CBSX. NSX will remain a Delaware for-profit stock corporation, with the authority to issue 1,000 shares of common stock, 100 shares of which would be held by CBSX. At all times, all of the outstanding stock of NSX would be owned by CBSX. NSX would remain registered as a national securities exchange under Section 6 of the Act,[4] and accordingly, NSX would remain a self-regulatory organization (''SRO'').[5]

In 2007, the Commission approved the establishment of CBSX as a facility, as defined in Section 3(a)(2) of the Act,[6] of CBOE.[7] As the SRO for CBSX, CBOE has regulatory responsibility for the activities of CBSX. CBSX administers a fully automated trading platform for securities other than options (the ''Facility''). As a limited liability company, the governance structure and operating authority of CBSX are set forth in the Operating Agreement and the CBSX Certificate of Formation. In connection with the establishment of the Facility, CBOE adopted Rule 3.32 pertaining to ownership concentration and affiliation limitations.[8]

As a limited liability company, ownership of CBSX is represented by limited liability membership interests. The holders of such interests are referred to as ''Owners.'' CBOE is one of the Owners of CBSX and owns all outstanding ''Series A'' Voting Shares [9] of CBSX, representing just under 50% of all outstanding shares of CBSX.[10] The outstanding ''Series B'' Voting Shares of CBSX are held by nine broker-dealers.

As provided in Section 8.9 of the Operating Agreement, the outstanding Series A Voting Shares, in the aggregate (and without being deemed to be a voting trust), are entitled to a number of votes equal to 50% of the total number of Voting Shares outstanding on each matter submitted to a vote of the Owners. Each outstanding Series B Voting Share is entitled to one vote on each matter submitted to a vote of the Owners.[11]

The CBSX Approval Order and the CBSX Notice of Filing describe various characteristics of CBSX, including: the relationship between CBSX and CBOE; changes in control of CBSX; the regulatory jurisdiction of the Commission and CBOE over the controlling parties and the Owners; and the ownership and voting restrictions on Owners.[12] These provisions, as contained in the Operating Agreement and applicable CBOE rules, will remain unchanged after the Transaction except as otherwise described below.

b. Proposed Rule Change

In connection with the Transaction, CBOE proposes to amend and restate the Operating Agreement to be effective as of the closing of the Transaction. CBOE also proposes to adopt new Rule 2.50 regarding its policy with respect to NSX.

i. CBSX's Ownership of NSX

The proposed rule change includes several amendments related to CBSX's ownership of NSX. These amendments address the fact that CBSX will become a holding company of NSX after the Transaction to the extent related to

[3] Conditions precedent to closing the Transaction are formal requirements set forth in the Purchase Agreement and include delivery of certain documents (such as officers' certificates, legal opinions, and agreements), compliance by each party with specified representations, warranties and covenants, and receipt of necessary approvals by each party.

[4] 15 U.S.C. 78f.

[5] NSX would continue to adhere to the undertakings in the Order Instituting Administrative and Cease-and-Desist Proceedings Pursuant to Sections 19(h) and 21C of the Securities Exchange Act of 1934, Making Findings, and Imposing Sanctions, including those related to a Regulatory Oversight Committee and the separation of the regulatory functions from the commercial interests of NSX. *See* Securities Exchange Act Release No. 51714 (May 19, 2005).

[6] 15 U.S.C. 78c(a)(2).

[7] *See* Securities Exchange Act Release No. 55389 (March 2, 2007), 72 FR 10575 (March 8, 2007) (SR–CBOE–2006–110) (the ''CBSX Approval Order''); *see also* Securities Exchange Act Release No. 55172 (January 25, 2007), 72 FR 4745 (February 1, 2007) (SR–CBOE–2006–110) (the ''CBSX Notice of Filing'').

[8] *See* CBSX Order Approval and CBSX Notice of Filing. CBOE Rule 3.32(a) provides, in part:

For as long as CBSX LLC operates as a facility of the Exchange, no Trading Permit Holder, either alone or together with its Affiliates, at any time, may own, directly or indirectly, of record or beneficially, an aggregate amount of Shares that would result in a greater than twenty percent (20%) Percentage Interest in CBSX LLC (the ''Concentration Limitation'').

In addition, the Certificate of Incorporation of CBOE Holdings, Inc., the owner of CBOE (''CBOE Holdings''), provides that no person (either alone or together with its related persons) may beneficially own more than 20% of the total outstanding shares of CBOE Holdings stock. *See* Article Sixth (b) of the Amended and Restated Certificate of Incorporation of CBOE Holdings, Inc.; *see also* Securities Exchange Act Release No. 62158 (May 24, 2010), 75 FR 30082 (May 28, 2010) (SR–CBOE–2008–88).

[9] ''Voting Shares'' means those Shares entitled to vote on matters submitted to the Owners, which Voting Shares are held by the Voting Owners. *See* Section 2.1(a)(28) of the Operating Agreement.

[10] As noted in Section 3.2 of the Operating Agreement, it is the intention of the Owners that no other members of CBSX (other than Affiliates of CBOE) be owners of Series A Voting Shares, and that no additional Series A Voting Shares be authorized, created or issued for such purpose; provided however, that this provision is not intended to limit or restrict any rights of CBOE to transfer any of its Series A Voting Shares with the prior approval of the Commission as provided for in Article VI, including Section 6.14, of the Operating Agreement, or any other provision thereof, or any rights to be acquired by a transferee of those Shares as provided therein.

[11] The Operating Agreement also creates a Series C Non-Voting Restricted Shares; however, these Shares are not entitled to vote on any matter submitted to a vote of the Owners, and there are currently no Series C shares outstanding. *See* Section 8.9 of the Operating Agreement.

[12] Section 6.12(a) of the Operating Agreement provides that no person (other than CBOE), either alone or together with its Affiliates, may directly or indirectly own an aggregate amount of Shares that would result in a greater than 20% Percentage Interest in CBSX (the ''Concentration Limitation''). In addition, Section 8.10 provides that if an Owner of Series B Voting Shares that is also a CBOE member owns more than 20% of the outstanding Voting Shares (''Excess Shares''), alone or together with any Affiliate, such Owner will have no voting rights with respect to the Excess Shares.

CBSX's control of NSX and clarify CBSX's rights and responsibilities related to its role as a holding company of a registered national securities exchange (amendments related to such responsibilities are further discussed in Section (ii) below). For example, the proposed rule change amends Section 1.6 to provide that the Company's sole purposes (and any other lawful purposes related to those purposes) will be: (1) To act as a trading market for securities other than options as a facility of a registered national securities exchange and (2) to act as a holding company of NSX. The proposed rule change also amends several provisions to clarify that certain references to CBSX include its subsidiaries, including NSX.[13]

In addition, the proposal amends Section 6.12 to provide that the Concentration Limitation described in that section does not apply to CBOE or CBOE Holdings, and to expand applicability of the Concentration Limitation to persons and their Related Persons [14] rather than to persons and their Affiliates.[15] The proposal also amends Section 6.12(c) and (e) to impose on NSX equity trading permit holders the Concentration Limitation prohibitions described in those paragraphs, which are currently only imposed on CBOE Trading Permit Holders. The proposal makes similar amendments to Section 8.10 to expand applicability of the voting restriction described in that section to persons and their Related Persons and to provide that if any person, not just a CBOE Trading Permit Holder, exceeds the Concentration Limitation set forth in Section 6.12 of the Operating Agreement, then the Owner and its Related Persons will have no voting rights with respect to the shares in excess of such limitation unless it satisfies certain requirements set forth in proposed Section 8.10(b) through (d), which are similar to the requirements set forth in Section 6.12(b), (c) and (e). The proposed rule change also extends the applicability of the voting restriction in Section 8.10 to voting agreements, plans and arrangements.

The proposal also amends Section 9.15(a)(9) to clarify that with respect to a sale of material assets or ownership interests that requires approval pursuant to Section 9.15, ''material assets or ownership interests'' include subsidiaries of CBSX. In addition, the proposed rule change adds Section 15.19 to the Operating Agreement, which obligates CBSX, when voting as NSX's sole shareholder in an election of the NSX board of directors, to vote in favor of ETP Holder Directors (a certain class of directors defined in the NSX Bylaws) that were nominated in accordance with the procedures set forth in NSX's certificate of incorporation and bylaws.

ii. Self-Regulatory Function of NSX

The proposed rule change adds various provisions designed to protect the independence of the self-regulatory function of NSX and to clarify NSX's jurisdiction with respect to CBSX, but only to the extent related to CBSX's control of NSX. For example, the proposed rule change adds Section 5.7(b), which, among other things:

- For so long as CBSX controls NSX, only to the extent related to the activities of NSX, requires CBSX Owners, board of directors, officers and employees to give due regard to the preservation of the independence of the self-regulatory function of NSX and to its obligations under the Act;
- Prohibits these persons from taking any actions that would interfere with the effectuation of any decisions by the NSX board of directors relating to NSX's regulatory functions, including disciplinary matters, or with NSX's ability to carry out its responsibilities under the Act; and
- Requires CBSX to comply with federal securities laws and the rules and regulations thereunder, and requires CBSX and its officers, directors, employees and agents to cooperate with the Commission and NSX pursuant to and to the extent of their regulatory authority.

In addition, the proposed rule change amends Section 6.15 to clarify possession of CBSX's and its Owners' books and records by the Facility and NSX in connection with their oversight pursuant to the Act. The proposed rule change amends Section 6.15(a): [16]

- To clarify that the Owners acknowledge that the books, records, premises, officers, directors, agents, and employees of the Owners will be deemed to be the books, records, premises, officers, directors, agents, and employees of CBOE for the purpose of and subject to oversight pursuant to the Act, but only to the extent they are related to the Facility; and
- To add the provision that the Owners acknowledge that the books, records, premises, officers, directors, agents, and employees of the Owners will be deemed to be the books, records, premises, officers, directors, agents, and employees of NSX for the purpose of and subject to oversight pursuant to the Act, but only to the extent they are related to the activities of NSX.

Similarly, the proposed rule change amends Section 6.15(b): [17]

- To clarify that the books, records, premises, officers, directors, agents, and employees of CBSX will be deemed to be the books, records, premises, officers, directors, agents, and employees of CBSX for the purpose of and subject to oversight pursuant to the Act, but only to the extent related to the Facility; and
- To add the provision that the books, records, premises, officers, directors, agents, and employees of CBSX will be deemed to be the books, records, premises, officers, directors, agents, and employees of NSX for the purpose of and subject to oversight pursuant to the

[13] *See, e.g.,* proposed Sections 1.6 and 9.15(a)(9) and (10) of the Operating Agreement.

[14] Proposed Rule 2.1(a)(23) of the Operating Agreement defines ''Related Person'' as (A) with respect to any person, all ''affiliates'' as such term is defined in Rule 12b–2 of the Exchange Act); (B) any person associated with a member (as the phrase ''person associated with a member'' is defined under Section 3(a)(21) of the Exchange Act); (C) any two or more persons that have any agreement, arrangement or understanding (whether or not in writing) to act together for the purpose of acquiring, voting, holding or disposing of shares of CBSX; (D) in the case of a person that is a company, corporation or similar entity, any executive officer (as defined under Rule 3b–7 of the Exchange Act) or director of such person and, in the case of a person that is a partnership or a limited liability company, any general partner, managing member of manager of such person, as applicable; (E) in the case of a person that is a natural person, any relative or spouse of such natural person, or any relative of such spouse who has the same home as such natural person or who is a director or officer of CBSX or any of CBSX's parents or subsidiaries; (F) in the case of a person that is an executive officer (as defined under Rule 3b–7 of the Exchange Act) or a director of a company, corporation or similar entity, such company, corporation or entity, as applicable; and (G) in the case of a person that is a general partner, managing member or manager of a partnership or limited liability company, such partnership or limited liability company, as applicable. Under this definition, Related Persons include Affiliates and thus extends the Concentration Limitation imposed by proposed Rule 6.12 to a broader group of persons.

[15] Rule 2.1(a)(1) of the Operating Agreement defines ''Affiliate'' as, with respect to any person, any other person that directly, or indirectly through one or more intermediaries, controls, is controlled by, or is under common control with, such person. As used in this definition, ''control'' means the possession, directly or indirectly, of the power to direct or cause the direction of management and policies of a person, whether through the ownership of voting securities, by contract or otherwise with respect to such person.

[16] Section 6.15(a) of the Operating Agreement currently provides: ''The Owners acknowledge that to the extent they are related to [CBSX's] activities, the books, records, premises, officers, directors, agents, and employees of the Owners shall be deemed to be the books, records, premises, officers, directors, agents, and employees of CBOE for the purpose of and subject to oversight pursuant to the Exchange Act.''

[17] Section 6.15(b) of the Operating Agreement currently provides: ''The books, records, premises, officers, directors, agents, and employees of [CBSX] shall be deemed to be the books, records, premises, officers, directors, agents, and employees of CBOE for the purpose of and subject to oversight pursuant to the Exchange Act.''

Act, but only to the extent related to the activities of NSX.[18]

The proposal also amends Section 6.15(c) to provide that CBSX and the Owners and their respective officers, directors, agents, and employees,[19] irrevocably submit to the jurisdiction of the U.S. federal courts, the Commission, CBOE and NSX for the purposes of any suit, action, or proceeding pursuant to U.S. federal securities laws or the rules or regulations thereunder, commenced or initiated by the Commission arising out of, or relating to, the Facility or the Company's control of NSX, as applicable.

In addition, the proposed rule change amends Sections 9.15(c) and 9.16 to provide that CBSX directors agree to comply with the federal securities laws and the rules and regulations thereunder, and to cooperate with the Commission, CBOE, and NSX pursuant to their regulatory authority, as applicable, and the provisions of the Operating Agreement. The proposal also amends Section 9.15(c) to provide that CBSX directors will take into consideration whether any actions taken or proposed to be taken as a director for or on behalf of CBSX, or any failure or refusal to act, would constitute interference with CBOE's or NSX's regulatory functions and responsibilities, as applicable, in violation of the Operating Agreement or the Act.[20]

Additionally, the proposal amends Section 14.1(a) to provide that, for so long as CBSX controls NSX, before any amendment, alteration, or repeal of any provision of the Operating Agreement, to the extent related to CBSX's control of NSX, will be effective, such amendment, alteration, or repeal must be submitted to the NSX board of directors, and if CBOE and the NSX board of directors determine that such amendment, alteration, or repeal must be filed with or filed with and approved by the Commission, then such amendment, alteration, or repeal will not become effective until filed with or filed with and approved by the Commission, as the case may be. The proposal also adds a 10-day notice provision for any amendment, alteration, or repeal of the Operating Agreement made pursuant to Section 14.1(a) to provide CBOE and NSX with sufficient opportunity to review any potential regulatory impacts of such amendment, alteration, or repeal before it becomes effective.

The proposal also amends Section 15.2 to provide that nothing in the Operating Agreement will be interpreted to limit or impede the rights of the Commission, CBOE, or NSX to access and examine any Confidential Information (as defined in the Operating Agreement) pursuant to the U.S. federal securities laws and the rules thereunder, or to limit or impede the ability of an Owner or an officer, director, agent, or employee of an Owner to disclose any Confidential Information to the Commission, CBOE, or NSX. Proposed Section 15.2 also provides that the obligation of Owners not to disclose Confidential Information described in that section does not apply to CBOE's or NSX's communications with the Commission with respect to the conduct of the Facility's business or NSX's business, respectively. In addition, the proposal amends the representation being made by Owners in Section 15.17(a) with respect to the validity and enforceability of the Operating Agreement by excepting the requirement, as applicable to the Facility or NSX (with respect to CBSX's control of NSX), that the portions of the Operating Agreement that constitute rules of a facility of an exchange or rules of a self-regulatory organization, as applicable, be filed for public comment and approval by the Commission from that representation.

The proposed rule change adds CBOE Rule 2.50 to further preserve the self-regulatory function of NSX. Rule 2.50 proposes a policy that CBOE, as a partial owner of CBSX, will not take any action related to NSX's activities that would interfere with NSX's efforts to carry out its self-regulatory obligations under the Act and the rules and regulations thereunder. Additionally, proposed Rule 2.50 provides that the Exchange will exercise its powers as a partial owner of CBSX to support the fulfillment by NSX of its self-regulatory obligations, including the appropriate allocation by NSX of such financial, technological, technical and personnel resources as may be necessary or appropriate for NSX to meet its obligations under the Exchange Act. While the Exchange is not a guarantor of NSX's compliance with the Exchange Act and will not be in a position to monitor the day-to-day operations of NSX, the purpose of proposed Rule 2.50(a) is to provide that the Exchange will, through CBSX and consistent with its relationship with CBSX, work with NSX to establish and maintain appropriate resources in connection with NSX's self-regulatory obligations, as well as to establish a framework by which NSX will affirmatively report deficiencies in fulfilling its self-regulatory obligations to the CBSX board of directors while taking action to remedy such deficiencies.

iii. Facility of CBOE

The proposed rule change amends various provisions to clarify that the part of CBSX that constitutes the Facility is a facility of CBOE under the Act, while the part of CBSX that relates to its control of NSX will not be a facility of CBOE. For example, the proposal amends Section 1.7 to clarify that the Facility (and not CBSX to the extent it will act as a holding company for NSX) is a facility of CBOE under the Act, and therefore the Facility will be subject to self-regulation by CBOE and oversight by the Commission. The proposal also amends Section 1.8 to clarify that only the Facility is a facility of CBOE.[21]

iv. Additional Changes

Finally, the proposed rule change makes several non-substantive technical and conforming changes throughout the Operating Agreement, including: Updating the name and date of the Operating Agreement; updating the current Owners and their current percentage interests and CBSX shares owned;[22] replacing references to CBOE members with CBOE trading permit holders;[23] updating the table of contents and section references; and adding new defined terms and renumbering the defined terms as necessary.[24] In connection with the updates to reflect the current Owners, the proposed rule change amends the definition of ''Super Majority of the Owners'' to mean, subject to the regulatory requirements described in Section 1.8 of the Operating Agreement, the affirmative vote of both (i) all of the Owners of the Series A Voting Shares at the time, and

[18] CBSX's complete records and books of account must be subject at all times to inspection and examination by CBOE (to the extent related to the Facility), NSX (to the extent related to CBSX's control of NSX), and the Commission at no additional charge to CBOE, NSX and the Commission, as applicable. *See* proposed Section 13.2 of the Operating Agreement.

[19] Proposed Rule 6.15(c) (consent to jurisdiction) and (d) (consent in writing to applicability) also extend the requirements of these provisions to all agents and employees of the Company and its Owners, rather than only agents and employees whose principal place of business and residence is outside of the United States.

[20] Interference with respect to the Facility will be determined by the CBSX board designees of CBOE. *See* proposed Section 9.15(c) of the Operating Agreement.

[21] *See also* proposed Sections 6.2(e), 6.15(c) and (d), 9.2(d), 9.15(a)(14) and 14.1(a) for additional such clarifications.

[22] *See* proposed Section 3.2(d) of and signature page and Exhibit A to the Operating Agreement.

[23] *See* proposed Sections 6.12(c) and (e) and 8.10 of the Operating Agreement.

[24] *See* proposed Section 2.1 of the Operating Agreement.

(ii) Owners of the Series B Voting Shares who then retain ownership of Series B Voting Shares and represent at least a twenty (20%) percentage interest in CBSX, which more accurately corresponds to CBSX's current ownership structure.[25]

2. Statutory Basis

The Exchange believes the proposed rule change is consistent with Section 6 of the Act[26] and the rules and regulations thereunder and, in particular, the requirements of Section 6(b) of the Act.[27] Specifically, the Exchange believes the amendments described in Item II(A)(1)(b)(iii), including amendments to Sections 1.7 and 1.8, that clarify the Facility is a facility of CBOE under the Act further the objective of Section 6(b)(1) of the Act because they ensure that CBOE will continue to have the necessary authority to perform its regulatory responsibilities with respect to the Facility under Section 6 of the Act. Additionally, this clarification of what constitutes the Facility ensures that CBSX, to the extent it controls NSX, is not part of the Facility and thus is not subject to CBOE's regulatory authority over the Facility, which the Exchange believes will preserve the independence of NSX's self-regulatory functions and allow NSX to fulfill its self-regulatory duties.

The Exchange also believes that this proposed rule change furthers the objectives of Section 6(b)(5) of the Act,[28] because the amendments summarized in this filing will ensure that CBSX and NSX continue to have governance and regulatory structures designed to promote just and equitable principles of trade, to prevent fraudulent and manipulative acts, to remove impediments to and to perfect the mechanism for a free and open market and a national market system, and, in general, to protect investors and the public interest. In particular, the amendments to Sections 6.12 and 8.10 described in Item II(A)(1)(b)(i) above extend certain ownership and voting restrictions to NSX equity trading permit holders in addition to CBOE trading permit holders to ensure that CBSX continues to promote equitable principles of trade by not allowing certain interested parties to have excessive influence over CBSX's activities.

The addition of Section 5.7(b) (described in Item II(A)(1)(b)(ii) above) is intended to preserve the independence of NSX's self-regulatory function and ensure that NSX is able to obtain any information it needs from the specified parties to detect and deter any fraudulent and manipulative acts in its marketplace and carry out its regulatory responsibilities under the Act. Similarly, the amendments to Section 6.15(a) and (b) (described in Item II(A)(1)(b)(ii) above) that clarify that CBSX's books and records with respect to the Facility and NSX's activities will be subject to the necessary oversight of the Act are consistent with Section 6(b)(5) of the Act, because they provide for the Commission, CBOE and NSX to have access to necessary information that will allow CBOE and NSX to efficiently and effectively enforce compliance with the Act and their respective rules, as well as allow the Commission to provide proper oversight, which will ultimately promote just and equitable principles of trade and protect investors. The amendment to Section 14.1(a) (described in Item II(A)(1)(b)(ii) above) is intended to make sure that NSX receives notice of any amendment to the Operating Agreement so that it can make any filings with the Commission necessary for NSX to fulfill its regulatory duties under the Act.

The Exchange represents that it remains committed to its role as a national securities exchange and does not believe that the proposed changes to the Operating Agreement will undermine the Exchange's responsibilities for regulating the Facility. The proposed rule change provides transparency and clarity with respect to the governance of CBSX and the status of CBSX as both a facility of CBOE and a holding company of NSX. Additionally, the proposed rule changes are intended to protect and maintain the integrity of the self-regulatory functions of CBOE with respect to the Facility and of NSX, and to allow both CBOE and NSX to carry out their regulatory responsibilities under the Act.

Moreover, the Exchange is not proposing any significant changes to CBSX's existing operational or trading structure in connection with the Transaction. Instead, the Exchange represents that the proposed rule change primarily consists of amendments to the Operating Agreement that will allow for CBSX's ownership of NSX, which are generally consistent with parallel provisions of governance documents of other companies that directly control SROs, which were previously approved by the Commission,[29] and with the principles articulated by the Commission,[30] while allowing CBOE to maintain its regulatory jurisdiction and authority over the Facility and NSX to remain an independent self-regulatory organization.

B. Self-Regulatory Organization's Statement on Burden on Competition

CBOE does not believe that the proposed rule change will impose any burden on competition not necessary or appropriate in furtherance of the purposes of the Act.

C. Self-Regulatory Organization's Statement on Comments on the Proposed Rule Change Received From Members, Participants or Others

No written comments were solicited or received with respect to the proposed rule change.

III. Date of Effectiveness of the Proposed Rule Change and Timing for Commission Action

Within 45 days of the date of publication of this notice in the **Federal Register** or within such longer period up to 90 days (i) as the Commission may designate if it finds such longer period to be appropriate and publishes its reasons for so finding or (ii) as to which the self-regulatory organization consents, the Commission will:

(A) By order approve or disapprove the proposed rule change, or

(B) Institute proceedings to determine whether the proposed rule change should be disapproved.

IV. Solicitation of Comments

Interested persons are invited to submit written data, views, and arguments concerning the foregoing, including whether the proposed rule change is consistent with the Act. Comments may be submitted by any of the following methods:

Electronic Comments

- Use the Commission's Internet comment form (*http://www.sec.gov/rules/sro.shtml*); or
- Send an email to *rule-comments@sec.gov.* Please include File

[25] *See* proposed Rule 2.1(a)(26). This change is consistent with the original structure of CBSX under which a super majority could be obtained with an affirmative vote of CBOE and two initial owners, who all initially had ten (10%) percentage interests in CBSX.

[26] 15 U.S.C. 78f.

[27] 15 U.S.C. 78f(b).

[28] 15 U.S.C. 78f(b)(5).

[29] *See* Articles Sixth, Fifteenth, and Sixteenth of the Amended and Restated Certificate of Incorporation of CBOE Holdings, Inc.; *see also* Securities Exchange Act Release No. 62158 (May 24, 2010), 75 FR 30082 (May 28, 2010) (SR–CBOE–2008–88) (order approving the Amended and Restated Certificate of Incorporation of CBOE Holdings in connection with the demutualization of CBOE).

[30] *See* Securities Exchange Act Release No. 50699 (November 18, 2004), 69 FR 71126 (December 8, 2004) (File No. S7–39–04).

Number SR–CBOE–2011–107 on the subject line.

Paper Comments

• Send paper comments in triplicate to Elizabeth M. Murphy, Secretary, Securities and Exchange Commission, 100 F Street NE., Washington, DC 20549–1090.

All submissions should refer to File Number SR–CBOE–2011–107. This file number should be included on the subject line if email is used. To help the Commission process and review your comments more efficiently, please use only one method. The Commission will post all comments on the Commission's Internet Web site (*http://www.sec.gov/rules/sro.shtml*). Copies of the submission, all subsequent amendments, all written statements with respect to the proposed rule change that are filed with the Commission, and all written communications relating to the proposed rule change between the Commission and any person, other than those that may be withheld from the public in accordance with the provisions of 5 U.S.C. 552, will be available for Web site viewing and printing in the Commission's Public Reference Room, 100 F Street NE., Washington, DC 20549, on official business days between the hours of 10 a.m. and 3 p.m. Copies of the filing will also be available for inspection and copying at the Exchange's principal office. All comments received will be posted without change; the Commission does not edit personal identifying information from submissions. You should submit only information that you wish to make publicly available. All submissions should refer to File Number SR–CBOE–2011–107 and should be submitted on or before December 23, 2011.

For the Commission, by the Division of Trading and Markets, pursuant to delegated authority.[31]

Kevin M. O'Neill,

Deputy Secretary.

[FR Doc. 2011–31001 Filed 12–1–11; 8:45 am]

BILLING CODE 8011–01–P

[31] 17 CFR 200.30–3(a)(12).

SECURITIES AND EXCHANGE COMMISSION

[Release No. 34–65834; File No. SR–C2–2011–033]

Self-Regulatory Organizations; C2 Options Exchange, Incorporated; Notice of Filing and Immediate Effectiveness of Proposed Rule Change Relating to Market-Makers' Continuous Quoting Obligations and Adjusted Option Series

November 28, 2011.

Pursuant to Section 19(b)(1) of the Securities Exchange Act of 1934 (''Act'')[1] and Rule 19b–4 thereunder,[2] notice is hereby given that on November 18, 2011, the C2 Options Exchange, Incorporated (the ''Exchange'' or ''C2'') filed with the Securities and Exchange Commission (the ''Commission'') the proposed rule change as described in Items I, II, and III below, which Items have been prepared by the Exchange. The Exchange filed the proposal as a ''non-controversial'' proposed rule change pursuant to Section 19(b)(3)(A)(iii) of the Act[3] and Rule 19b–4(f)(6) thereunder.[4] The Commission is publishing this notice to solicit comments on the proposed rule change from interested persons.

I. Self-Regulatory Organization's Statement of the Terms of Substance of the Proposed Rule Change

The Exchange proposes to amend Rules 8.5 and 8.13 to indicate that Market-Makers will not be obligated to maintain continuous quotes in adjusted option series and to define the term adjusted option series.[5] The text of the proposed rule change is available on the Exchange's Web site (*http://www.c2exchange.com/legal*), at the Exchange's Office of the Secretary, and at the Commission's Public Reference Room.

[1] 15 U.S.C. 78s(b)(1).

[2] 17 CFR 240.19b–4.

[3] 15 U.S.C. 78s(b)(3)(A)(iii).

[4] 17 CFR 240.19b–4(f)(6).

[5] In addition, to ensure that Market-Makers will continue to be obligated to quote in adjusted option series if and when the need arises, the proposed rule change adds Rule 8.5(d) to provide that a Market-Maker may be called upon by an Exchange official designated by the Board of Directors to submit a single quote or maintain continuous quotes in one or more series of a class to which the Market-Maker is appointed whenever, in the judgment of such official, it is necessary to do so in the interest of maintaining a fair and orderly market.

II. Self-Regulatory Organization's Statement of the Purpose of, and Statutory Basis for, the Proposed Rule Change

In its filing with the Commission, the Exchange included statements concerning the purpose of and basis for the proposed rule change and discussed any comments it received on the proposed rule change. The text of those statements may be examined at the places specified in Item IV below. The Exchange has prepared summaries, set forth in sections A, B, and C below, of the most significant parts of such statements.

A. Self-Regulatory Organization's Statement of the Purpose of, and the Statutory Basis for, the Proposed Rule Change

1. Purpose

The purpose of the proposed rule change is to amend Rules 8.5, ''Obligations of Market-Makers,'' and 8.13, ''Preferred Market-Maker Program,'' to indicate that Market-Makers will not be obligated to maintain continuous quotes in adjusted option series and to define the term adjusted option series. The proposal is based on recent rule changes of NYSE Amex LLC (''NYSE Amex''), NYSE Arca, Inc. (''NYSE Arca'') and NASDAQ OMX PHLX, Inc. (''PHLX'').[6]

Rule 8.5(a)(1) currently provides that during trading hours, a Market-Maker must maintain a continuous two-sided market in 60% of the series of each registered class that have a time to expiration of less than nine months. For purposes of that obligation, ''continuous'' means 99% of the time.[7] Rule 8.13(d) currently provides that a Preferred Market-Maker[8] (Market-

[6] *See* Securities Exchange Act Release Nos. 65572 (October 14, 2011), 76 FR 65310 (October 20, 2011) (SR–NYSEAmex–2011–61) (order granting approval of proposed rule change concerning market maker continuous quoting obligations and adjusted option series); 65573 (October 14, 2011), 76 FR 65305 (October 20, 2011) (SR–NYSEArca–2011–59) (order granting approval of proposed rule change concerning market maker continuous quoting obligations and adjusted option series); and 61095 (December 2, 2009), 74 FR 64786 (December 8, 2009 (SR–PHLX–2009–99).

[7] The rule also provides that if a technical failure or limitation of the Exchange's system prevents a Market-Maker from maintaining, or from communicating to the Exchange, timely and accurate quotes in a series, the duration of such failure will not be considered in determining whether that Market-Maker has satisfied the 99% quoting standard with respect to that series. The Exchange may consider other exceptions to this obligation based on demonstrated legal or regulatory requirements or other mitigating circumstances.

[8] Rule 8.13(a) provides that the Exchange may allow, on a class-by-class basis, for the receipt of marketable orders, through the Exchange's system

Makers and Preferred Market-Makers collectively referred to as ''Market-Makers'' in this filing) must comply with the quoting obligations applicable under Exchange rules and must provide continuous quotes in at least 90% of the series of each class for which it receives Preferred Market-Maker orders.

The Exchange proposes to relieve Market-Makers of the obligation to maintain continuous quotes in adjusted option series. The proposal amends the rules discussed above that impose continuous quoting obligations on Market-Makers to provide that such quoting obligations only apply to non-adjusted option series. The proposal defines ''adjusted option series'' as an option series for which, as a result of a corporate action by the issuer of the security underlying such option series, one option contract in the series represents the delivery of other than 100 shares of underlying stock or Units.[9]

After a corporate action and a subsequent adjustment to the existing options, the series in question are identified by the Options Price Reporting Authority and at the Options Clearing Corporation with a separate symbol consisting of the underlying symbol and a numerical appendage. As a standard procedure, exchanges listing options on an underlying security that undergoes a corporate action resulting in adjusted series will list new standard option series across all appropriate expiration months the day after the existing series are adjusted. The adjusted series are generally actively traded for a short period of time following adjustment, but orders to open options positions in the underlying security are almost exclusively placed in the new standard option series contracts. Although the adjusted series may not expire for a long period of time, in a short time the adjusted series are no longer actively traded. Thus, the burden of quoting these series generally outweighs the benefit of being appointed in the class because of the lack of interest in the series by various market participants.

The Exchange notes that other options exchanges have indicated that market-makers have recently withdrawn from assignments in classes that include adjusted series, resulting in a reduction in liquidity in these classes. These market-makers informed the exchanges that the withdrawals were based in part on their obligation to continuously quote adjusted option series, and the quoting obligations on these often less frequently traded option series impacted the risk parameters acceptable to the market-makers. These options exchanges also noted that market-makers also expressed concern that the adjusted nature of these series complicates the calculation of an appropriate quote. As a result of withdrawals from such assignments by market-makers, these options exchanges stated that liquidity, as well as volume, had been negatively impacted in the affected options classes listed on the exchanges.[10] The Exchange believes that this proposal will prevent any similar withdrawals by C2 Market-Makers from assignments in classes that include adjusted option series on the Exchange, and thus any potential reduction in liquidity and volume related to the withdrawals, and encourage Market-Makers to continue their appointments in these option classes.

In support of this proposal, the Exchange notes that this proposed rule change is similar to recent rule changes of NYSE Amex, NYSE Arca and PHLX.[11] The Exchange is merely proposing to exclude adjusted option series from Market-Makers' continuous quoting obligations, but not from other obligations imposed on Market-Makers pursuant to Rules 8.5 and 8.13. In addition, to ensure that Market-Makers will continue to be obligated to quote in adjusted option series if and when the need arises, the proposed rule change adds Rule 8.5(d) to provide that a Market-Maker may be called upon by an Exchange official designated by the Board of Directors to submit a single quote or maintain continuous quotes in one or more series of a class to which the Market-Maker is appointed whenever, in the judgment of such official, it is necessary to do so in the interest of maintaining a fair and orderly market.[12] For example, in the event of a large market order imbalance in a particular series, and the Market-Makers currently quoting in that series are not able to provide sufficient liquidity to fulfill the full size of the orders, an Exchange official may call upon a Market-Maker to maintain continuous quotes in such series until the imbalance is resolved.

The current quoting obligation in these illiquid adjusted option series is a minor part of a Market-Maker's overall obligation, and the proposed relief is mitigated by a Market-Maker's obligation to respond to a request for quote by a Trading Permit Holder. Because of the lack of interest in these adjusted option series, there is little demonstrable benefit to being a Market-Maker in them other than the ability to maintain Market-Maker margins for what little activity may occur. In addition, the burden of continuous quoting in these series is counter to the Exchange's efforts to mitigate the number of quotes collected and disseminated.

The Exchange believes that the proposed rule change should incent Market-Makers to continue appointments, and as a result expand liquidity, in options classes listed on the Exchange to the benefit of the Exchange and its Trading Permit Holders and public customers. The Exchange believes that its Market-Makers would be disadvantaged if they are required to continuously quote in these illiquid adjusted option series, and the Exchange's Trading Permit Holders and public customers would also be disadvantaged if Market-Makers withdrew from appointments in options classes that include adjusted option series, resulting in reduced liquidity and volume in these classes.

2. Statutory Basis

The Exchange believes the proposed rule change is consistent with Section 6 of the Act[13] and the rules and regulations thereunder and, in particular, the requirements of Section 6(b) of the Act.[14] Specifically, the Exchange believes the proposed rule change is consistent with the Section 6(b)(5)[15] requirements that the rules of an exchange be designed to promote just and equitable principles of trade, to prevent fraudulent and manipulative acts, to remove impediments to and to perfect the mechanism for a free and open market and a national market system, and, in general, to protect investors and the public interest.

In particular, the Exchange believes this proposed rule change is consistent with the Act because, on balance, the elimination of the continuous quoting obligations in adjusted option series is

when the Exchange's disseminated quote is the national best bid or offer, that carry a designation from the member transmitting the order that specifies a Market-Maker in that class as the ''Preferred Market-Maker'' for that order.

[9] ''Units'' are securities other than shares that are traded on a national securities exchange and are defined as an ''NMS stock'' under Rule 600 of Regulation NMS and that meet the other requirements set forth in Rule 5.3, Interpretation and Policy .06.

[10] *See supra* note 6.

[11] *Id.*

[12] The duration for which a Market-Maker must maintain continuous quotes if called upon by an Exchange official pursuant to new Rule 8.5(d) would depend on the facts and circumstances that prompted the Exchange official to make such a request, and therefore could last anywhere from a few minutes to the remainder of the trading day. This new Rule 8.5(d) is based on a similar provision in CBOE Rule 8.7(d)(iv).

[13] 15 U.S.C. 78f.

[14] 15 U.S.C. 78f(b).

[15] 15 U.S.C. 78f(b)(5).

a minor change and should not impact the quality of C2's trading market. Among other things, adjusted option series are not common, and trading interest is often very low after the corporate event has passed. Consequently, continuous quotes in these series increase quote traffic and burdens systems without a corresponding benefit. By not requiring Market-Makers to provide continuous quotes in these series, the Exchange's proposal would further its goal of measured quote mitigation. Further, while they will not be tasked with providing continuous quotes in these series, Market-Makers must still quote these series when requested by an Exchange official. Accordingly, the proposal supports the quality of C2's trading market by helping to ensure that Market-Makers will continue to be obligated to quote in adjusted option series if and when the need arises.

These changes are consistent with the rules of competing options exchanges, and they serve to remove impediments to and to perfect the mechanism for a free and open market and a national market system.

B. Self-Regulatory Organization's Statement on Burden on Competition

C2 does not believe that the proposed rule change will impose any burden on competition not necessary or appropriate in furtherance of the purposes of the Act. In this regard, and as indicated above, the Exchange notes that the rule change is being proposed as a competitive response to recent rule changes of NYSE Amex, NYSE Arca and PHLX.[16] C2 believes this proposed rule change is necessary to permit fair competition among the options exchanges with respect to Market-Makers' continuous quoting obligations.

C. Self-Regulatory Organization's Statement on Comments on the Proposed Rule Change Received From Members, Participants, or Others

No written comments were solicited or received with respect to the proposed rule change.

III. Date of Effectiveness of the Proposed Rule Change and Timing for Commission Action

Because the proposed rule change does not (i) significantly affect the protection of investors or the public interest; (ii) impose any significant burden on competition; and (iii) become operative for 30 days from the date on which it was filed, or such shorter time as the Commission may designate if consistent with the protection of investors and the public interest, provided that the self-regulatory organization has given the Commission written notice of its intent to file the proposed rule change at least five business days prior to the date of filing of the proposed rule change or such shorter time as designated by the Commission, the proposed rule change has become effective pursuant to Section 19(b)(3)(A) of the Act[17] and Rule 19b–4(f)(6)[18] thereunder.

At any time within 60 days of the filing of such proposed rule change, the Commission summarily may temporarily suspend such rule change if it appears to the Commission that such action is necessary or appropriate in the public interest, for the protection of investors, or otherwise in furtherance of the purposes of the Act.

IV. Solicitation of Comments

Interested persons are invited to submit written data, views, and arguments concerning the foregoing, including whether the proposed rule change is consistent with the Act. Comments may be submitted by any of the following methods:

Electronic Comments

- Use the Commission's Internet comment form (*http://www.sec.gov/rules/sro.shtml*); or
- Send an email to *rule-comments@sec.gov.* Please include File Number SR–C2–2011–033 on the subject line.

Paper Comments

- Send paper comments in triplicate to Elizabeth M. Murphy, Secretary, Securities and Exchange Commission, 100 F Street NE., Washington, DC 20549–1090.

All submissions should refer to File Number SR–C2–2011–033. This file number should be included on the subject line if email is used. To help the Commission process and review your comments more efficiently, please use only one method. The Commission will post all comments on the Commission's Internet Web site (*http://www.sec.gov/rules/sro.shtml*). Copies of the submission, all subsequent amendments, all written statements with respect to the proposed rule change that are filed with the Commission, and all written communications relating to the proposed rule change between the Commission and any person, other than those that may be withheld from the public in accordance with the provisions of 5 U.S.C. 552, will be available for Web site viewing and printing in the Commission's Public Reference Room, 100 F Street NE., Washington, DC 20549, on official business days between the hours of 10 a.m. and 3 p.m. Copies of the filing also will be available for inspection and copying at the principal office of the Exchange. All comments received will be posted without change; the Commission does not edit personal identifying information from submissions. You should submit only information that you wish to make available publicly. All submissions should refer to File Number SR–C2–2011–033 and should be submitted on or before December 23, 2011.

For the Commission, by the Division of Trading and Markets, pursuant to delegated authority.[19]

Kevin M. O'Neill,

Deputy Secretary.

[FR Doc. 2011–30995 Filed 12–1–11; 8:45 am]

BILLING CODE 8011–01–P

[16] *See supra* note 6.

[17] 15 U.S.C. 78s(b)(3)(A).

[18] 17 CFR 240.19b–4(f)(6). In addition, Rule 19b–4(f)(6) requires a self-regulatory organization to give the Commission written notice of its intent to file the proposed rule change at least five business days prior to the date of filing of the proposed rule change, or such shorter time as designated by the Commission. The Exchange has satisfied this requirement.

[19] 17 CFR 200.30–3(a)(12).

SECURITIES AND EXCHANGE COMMISSION

[Release No. 34–65833; File No. SR–CBOE–2011–109]

Self-Regulatory Organizations; Chicago Board Options Exchange, Incorporated; Notice of Filing and Immediate Effectiveness of a Proposed Rule Change To Amend the Fees Schedule

November 28, 2011.

Pursuant to Section 19(b)(1) of the Securities Exchange Act of 1934 (the ''Act''),[1] and Rule 19b–4 thereunder,[2] notice is hereby given that on November 15, 2011, the Chicago Board Options Exchange, Incorporated (the ''Exchange'' or ''CBOE'') filed with the Securities and Exchange Commission (the ''Commission'') the proposed rule change as described in Items I, II, and III below, which Items have been prepared by the Exchange. The Commission is publishing this notice to solicit comments on the proposed rule change from interested persons.

[1] 15 U.S.C. 78s(b)(1).

[2] 17 CFR 240.19b–4.

I. Self-Regulatory Organization's Statement of the Terms of the Substance of the Proposed Rule Change

The Exchange proposes to amend its Fees Schedule. The text of the proposed rule change is available on the Exchange's Web site (*http://www.cboe.org/legal*), at the Exchange's Office of the Secretary, and at the Commission.

II. Self-Regulatory Organization's Statement of the Purpose of, and Statutory Basis for, the Proposed Rule Change

In its filing with the Commission, the self-regulatory organization included statements concerning the purpose of and basis for the proposed rule change and discussed any comments it received on the proposed rule change. The text of those statements may be examined at the places specified in Item IV below. The Exchange has prepared summaries, set forth in sections A, B, and C below, of the most significant parts of such statements.

A. Self-Regulatory Organization's Statement of the Purpose of, and the Statutory Basis for, the Proposed Rule Change

1. Purpose

The Floor Broker Workstation (''FBW'') is a system for electronically entering and managing orders on the Exchange floor. The Exchange has improved the functionality of the FBW to provide a new ''Market Access Controls Window'' (the ''Window'') that will display for each ''FBW aggregation group'' [3] values for each of the following access-based controls: Per Order Controls, which include values for (a) quantity of contracts per order, (b) premium amount per order, (c) number of identical orders, and (d) frequency of order entry (count and timeframe); and Aggregate Controls, which include actual and predictive values for (1) premium amount per day, (2) quantity of contracts per day, and (3) the number of orders with a status of ''working''. The Window will be an optional feature of FBW and will be provided to each CBOE Trading Permit Holder (''TPH'') that requests the Window (a ''Requesting TPH'').

The Exchange proposes to charge a Requesting TPH $100 per Login ID per month. There will be a cap of $2,000 per month for any Requesting TPH. Therefore, any TPH that requests access to the FBW Market Access Controls Window for more than 20 login IDs will not be required to pay more than $2,000 per month for such access. The purpose of the proposed fee is to recoup costs involved in providing the Window, which is licensed from an outside vendor.

The proposed rule change filing is to take effect December 1, 2011.

2. Statutory Basis

The proposed rule change is consistent with Section 6(b) of the Act,[4] in general, and furthers the objectives of Section 6(b)(4) [5] of the Act in particular, in that it is designed to provide for the equitable allocation of reasonable dues, fees, and other charges among CBOE Trading Permit Holders and other persons using Exchange facilities, and the objectives of Section 6(b)(5) [6] of the Act in particular in that it is not designed to permit unfair discrimination between customers, issuers, brokers, or dealers. The Exchange believes that the amount of the proposed fee is reasonable because it is within the range of fees assessed by the Exchange for the use of other trading floor terminal functionalities [7] and because that amount is necessary to recoup costs involved in providing the Window, which is licensed from an outside vendor. The Exchange believes the proposed fee is equitable and not unfairly discriminatory because the fee would be optional and would be applied uniformly to all CBOE Trading Permit Holders that use the Window.

B. Self-Regulatory Organization's Statement on Burden on Competition

CBOE does not believe that the proposed rule change will impose any burden on competition not necessary or appropriate in furtherance of the purposes of the Act.

C. Self-Regulatory Organization's Statement on Comments on the Proposed Rule Change Received From Members, Participants, or Others

No written comments were solicited or received with respect to the proposed rule change.

III. Date of Effectiveness of the Proposed Rule Change and Timing for Commission Action

The proposed rule change is designated by the Exchange as establishing or changing a due, fee, or other charge, thereby qualifying for effectiveness on filing pursuant to Section 19(b)(3)(A) of the Act [8] and subparagraph (f)(2) of Rule 19b–4 [9] thereunder. At any time within 60 days of the filing of the proposed rule change, the Commission summarily may temporarily suspend such rule change if it appears to the Commission that such action is necessary or appropriate in the public interest, for the protection of investors, or otherwise in furtherance of the purposes of the Act.

IV. Solicitation of Comments

Interested persons are invited to submit written data, views, and arguments concerning the foregoing, including whether the proposed rule change is consistent with the Act. Comments may be submitted by any of the following methods:

Electronic Comments

- Use the Commission's Internet comment form (*http://www.sec.gov/rules/sro.shtml*); or
- Send an email to *rule-comments@sec.gov.* Please include File Number SR–CBOE–2011–109 on the subject line.

Paper Comments

- Send paper comments in triplicate to Elizabeth M. Murphy, Secretary, Securities and Exchange Commission, 100 F Street NE., Washington, DC 20549–1090.

All submissions should refer to File Number SR–CBOE–2011–109. This file number should be included on the subject line if email is used. To help the Commission process and review your comments more efficiently, please use only one method. The Commission will post all comments on the Commission's Internet Web site (*http://www.sec.gov/rules/sro.shtml*). Copies of the submission, all subsequent amendments, all written statements with respect to the proposed rule change that are filed with the Commission, and all written communications relating to the proposed rule change between the Commission and any person, other than those that may be withheld from the public in accordance with the provisions of 5 U.S.C. 552, will be available for Web site viewing and printing in the Commission's Public Reference Room on official business days between the hours of 10 a.m. and 3 p.m. Copies of such filing also will be available for inspection and copying at the principal offices of the Exchange. All comments received will be posted without change; the Commission does

[3] An FBW aggregation group is a grouping of FBW users within a CBOE Trading Permit Holder firm. Each FBW user has an FBW Login ID.

[4] 15 U.S.C. 78f(b).

[5] 15 U.S.C. 78f(b)(4).

[6] 15 U.S.C. 78f(b)(5).

[7] *See* Exchange Fees Schedule, Section 8(F)(10).

[8] 15 U.S.C. 78s(b)(3)(A).

[9] 17 CFR 240.19b–4(f)(2).

not edit personal identifying information from submissions. You should submit only information that you wish to make available publicly. All submissions should refer to File Number SR–CBOE–2011–109, and should be submitted on or before December 23, 2011.

For the Commission, by the Division of Trading and Markets, pursuant to delegated authority.[10]

Kevin M. O'Neill,

Deputy Secretary.

[FR Doc. 2011–30994 Filed 12–1–11; 8:45 am]

BILLING CODE 8011–01–P

SECURITIES AND EXCHANGE COMMISSION

[Release No. 34–65844; File No. SR–NASDAQ–2011–143]

Self-Regulatory Organizations; The NASDAQ Stock Market LLC; Order Approving Proposed Rule Change With Respect to an Amendment to the By-Laws of The NASDAQ OMX Group, Inc.

November 28, 2011.

On October 11, 2011, The NASDAQ Stock Market LLC (''Exchange'') filed with the Securities and Exchange Commission (''Commission''), pursuant to Section 19(b)(1) of the Securities Exchange Act of 1934 (''Act'') [1] and Rule 19b–4 thereunder,[2] a proposed rule change to amend the by-laws of its parent corporation, The NASDAQ OMX Group, Inc. (''NASDAQ OMX''). The proposed rule change was published for comment in the **Federal Register** on October 28, 2011.[3] The Commission received no comments on the proposal.

After careful review, the Commission finds that the proposed rule change is consistent with the requirements of the Act and the rules and regulations thereunder applicable to a national securities exchange [4] and, in particular, the requirements of Section 6(b)(5) of the Act.[5] The proposal will allow the NASDAQ OMX Board of Directors (''Board'') to determine the size of its Audit Committee, so long as the Audit Committee includes at least three directors, as well as the size of its Nominating & Governance Committee, so long as the Nominating & Governance Committee includes at least two directors. The proposal is intended to provide greater flexibility to the NASDAQ OMX Board to determine the appropriate size for these committees. The Commission notes that the proposed rule change maintains compliance with the Exchange's listing standards. The proposal does not change any other compositional requirements of either the Audit Committee or the Nominating & Governance Committee, including independence requirements. Moreover, the Commission notes that the proposal does not alter the application of Section 10A of the Exchange Act [6] and Rule 10A–3 thereunder [7] to the NASDAQ OMX Audit Committee. The proposal also deletes an obsolete section from, and corrects a typographical error in, the NASDAQ OMX by-laws, which are clarifying revisions. For the foregoing reasons, the Commission believes that the proposed rule change is consistent with the Act.

It is therefore ordered, pursuant to Section 19(b)(2) of the Act,[8] that the proposed rule change (SR–NASDAQ–2011–143) be, and it hereby is, approved.

For the Commission, by the Division of Trading and Markets, pursuant to delegated authority.[9]

Kevin M. O'Neill,

Deputy Secretary.

[FR Doc. 2011–31014 Filed 12–1–11; 8:45 am]

BILLING CODE 8011–01–P

SECURITIES AND EXCHANGE COMMISSION

[Release No. 34–65842; File No. SR–NSX–2011–14]

Self-Regulatory Organizations; National Stock Exchange, Inc.; Notice of Filing of Proposed Rule Change Relating to the Proposed Rule Change in Connection With the Proposed Purchase and Sale of the National Stock Exchange, Inc. to CBOE Stock Exchange, Inc.

November 28, 2011.

Pursuant to Section 19(b)(1) of the Securities Exchange Act of 1934 (the ''Act'') 15 U.S.C. 78s(b)(1), notice is hereby given that on November 28, 2011, the National Stock Exchange, Inc. filed with the Securities and Exchange Commission (''Commission'') the proposed rule change, as described in Items I and II below, which Items have been prepared by the Exchange. The Commission is publishing this notice to solicit comment on the proposed rule change from interested persons.

I. Self-Regulatory Organization's Statement of the Terms of Substance of the Proposed Rule Change

National Stock Exchange, Inc. (''NSX®'' or the ''Exchange'') is submitting this rule filing in connection with the proposed purchase and sale of the Exchange (the ''Transaction'') to CBOE Stock Exchange, LLC (''CBSX''). If the Transaction is completed, NSX will become a wholly owned subsidiary of CBSX. The proposed rule change, if approved, will not be operative until consummation of the Transaction.

The Exchange is proposing that, pursuant to the Transaction, NSX will become a wholly owned subsidiary of CBSX. In addition, the Exchange is proposing that in connection with the Transaction, the Securities and Exchange Commission (the ''Commission'') approve certain amendments to the organizational documents of NSX and CBSX.

The text of the proposed rule change is available on the Exchange's Web site at *http://www.nsx.com,* at the principal office of the Exchange, at the Commission's Public Reference Room, and on the Commission's Web site at *http://www.sec.gov.*

II. Self-Regulatory Organization's Statement of the Purpose of, and Statutory Basis for, the Proposed Rule Change

In its filing with the Commission, the Exchange included statements concerning the purpose of and basis for the proposed rule change and discussed any comments it received on the proposed rule change. The text of these statements may be examined at the places specified in Item IV below. The Exchange has prepared summaries, set forth in sections A, B, and C below, of the most significant parts of such statements.

A. Self-Regulatory Organization's Statement of the Purpose of, and Statutory Basis for, the Proposed Rule Change

1. Purpose

Description of the Transaction

Currently, the Exchange is wholly and directly owned by NSX Holdings, Inc., a Delaware corporation (''Holdings''). Under a Purchase Agreement (the ''Purchase Agreement'') dated September 28, 2011 by and between the Exchange, Holdings and CBOE Stock Exchange, LLC, a Delaware limited

[10] 17 CFR 200.30–3(a)(12).

[1] 15 U.S.C. 78s(b)(1).

[2] 17 CFR 240.19b–4.

[3] *See* Securities Exchange Act Release No. 65604 (October 21, 2011), 76 FR 67006.

[4] In approving this proposed rule change, the Commission has considered the proposed rule's impact on efficiency, competition, and capital formation. *See* 15 U.S.C. 78c(f).

[5] 15 U.S.C. 78f(b)(5).

[6] 15 U.S.C. 78j–1.

[7] 17 CFR 240.10A–3.

[8] 15 U.S.C. 78s(b)(2).

[9] 17 CFR 200.30–3(a)(12).

liability company (''CBSX''), all of the outstanding capital stock of NSX is proposed to be acquired by CBSX on the date of or after all conditions precedent to closing [1] have been satisfied or waived, including approval by the Commission of the instant rule filing. The post-closing corporate structure of NSX and CBSX, respectively, are described below.

a. NSX

Following the Transaction, NSX would be a wholly owned subsidiary of CBSX. NSX would remain a Delaware for-profit stock corporation, with the authority to issue 1,000 shares of common stock, 100 shares of which would be held by CBSX. At all times, all of the outstanding stock of NSX would be owned by CBSX.[2] NSX would remain an entity registered as a national securities exchange under Section 6 of the Securities Exchange Act of 1934 (the ''Act'') [3] and, accordingly, NSX would remain a self-regulatory organization (''SRO'').[4]

i. Governing Documents

The proposed Amended and Restated NSX Certificate of Incorporation (the ''A&R Certificate'') and Second Amended and Restated NSX By-Laws (the ''A&R By-Laws''), amended as described below, and NSX Rules (which are proposed to remain unchanged) would continue to govern the activities of NSX. These rules and governance documents would reflect, among other things, NSX's status as a wholly owned subsidiary of CBSX, continued management of NSX by the NSX Board of Directors (''NSX Board'') and designated officers, and the Exchange's continuing discharge of its self-regulatory responsibilities pursuant to NSX's registration under Section 6 of the Act. NSX's proposed governance structure is designed to be consistent with its current governance structure, with certain changes as described below.

ii. Board of Directors

Currently, the NSX Board consists of 13 director positions, of which seven are Independent, three are ETP Holder, two are At Large, and one is the Exchange Chief Executive Officer. The Transaction contemplates that all current Exchange directors and committee members, including the Chief Executive Officer, will resign from the Board and committees, as applicable, effective upon closing. At such time, the vacancies on the Board and committees of the Board will be filled in accordance with applicable procedures contained in the A&R By-Laws. Candidates with the necessary qualifications will be appointed in accordance with Sections 3 or 5, as applicable, of the A&R By-Laws to fulfill the expired portion of any vacancies created by the resignation. Thereafter, directors and committee members will be nominated and elected in accordance with the A&R By-Laws.

b. CBSX

In 2007, the Commission approved the establishment of the CBOE Stock Exchange as a facility, as defined in Section 3(a)(2) of the Act,[5] of the Chicago Board Options Exchange, Incorporated (''CBOE'').[6] As the SRO for CBSX, CBOE has regulatory responsibility for the activities of CBSX. CBSX administers a fully automated trading platform for securities other than options (the ''Facility''). As a limited liability company, the governance structure and operating authority of CBSX are set forth in the Second Amended and Restated Operating Agreement of CBSX (''Operating Agreement'') and the CBSX Certificate of Formation. In connection with the establishment of the Facility, CBOE adopted Rule 3.32 pertaining to ownership concentration and affiliation limitations.[7]

As a limited liability company, ownership of CBSX is represented by limited liability membership interests. The holders of such interests are referred to as ''Owners.'' CBOE is one of the Owners of CBSX, and owns all outstanding ''Series A'' Voting Shares [8] of CBSX, representing just under 50% of all outstanding shares of CBSX.[9] The outstanding ''Series B'' Voting Shares of CBSX are held by nine broker-dealers.

As provided in Section 8.9 of the Operating Agreement, the outstanding Series A Voting Shares, in the aggregate (and without being deemed to be a voting trust), are entitled to a number of votes equal to 50% of the total number of Voting Shares outstanding, on each matter submitted to a vote of the Owners. Each outstanding Series B Voting Share is entitled to one vote on each matter submitted to a vote of the Owners.[10]

The CBSX Approval Order and the CBSX Notice of Filing describe various characteristics of CBSX, including the relationship between CBSX and CBOE; changes in control of CBSX; the regulatory jurisdiction of the

[1] Conditions precedent to closing the Transaction are formal requirements set forth in the Purchase Agreement and include, without limitation, delivery of certain documents (such as officers' certificates, legal opinions, and agreements), compliance by each party with specified representations, warranties and covenants, and receipt of necessary approvals by each party.

[2] *See* proposed NSX Amended and Restated Certificate of Incorporation, Article Fourth, which deletes reference to NSX Holdings, Inc. and provides ''At all times, all of the outstanding stock of the Corporation shall be owned by CBOE Stock Exchange, LLC, a Delaware limited liability company.''

[3] 15 U.S.C. 78f.

[4] NSX would continue to adhere to the undertakings in the Order Instituting Administrative and Cease-and-Desist Proceedings Pursuant to Sections 19(b) and 21C of the Securities Exchange Act of 1934, Making Findings and Imposing Sanctions, entered by the Commission on May 19, 2005 (see Securities Exchange Act Release No. 51714, May 19, 2005) (the ''Order''). The Order provides for certain structural protections to ensure that the regulatory functions are independent from the commercial interests of the Exchange, including, among other things, that the Chief Regulatory Officer reports directly to the NSX Board and the Regulatory Oversight Committee; *see* section IIIF2.a of the Order.

[5] 15 U.S.C. 78c(a)(2).

[6] *See* Securities Exchange Act Release No. 55389 (March 2, 2007), 72 FR 10575 (March 8, 2007) (SR–CBOE–2006–110) (the ''CBSX Approval Order''). *See also* Securities Exchange Act Release No. 55172 (January 25, 2007), 72 FR 4745 (February 1, 2007) (SR–CBOE–2006–110) (the ''CBSX Notice of Filing''). All information contained herein with respect to the corporate structure, governance, ownership and operations of CBSX and CBOE is based on the Exchange's information and belief as disclosed in the CBSX Approval Order and CBSX Notice of Filing and pursuant to communications with CBSX personnel prior to the submission of this filing.

[7] *See* CBSX Approval Order. CBOE Rule 3.32 provides, in part:

''For as long as CBSX LLC operates as a facility of the Exchange, no Trading Permit Holder, either alone or together with its Affiliates, at any time, may own, directly or indirectly, of record or beneficially, an aggregate amount of Shares that would result in a greater than twenty percent (20%) Percentage Interest in CBSX LLC (the ''Concentration Limitation'').''

In addition, the Certificate of Incorporation of CBOE Holdings, Inc., the owner of CBOE, provides that no person (either alone or together with its related persons) may beneficially own more than 20% of the total outstanding shares of CBOE Holdings stock. *See* Article Sixth (b) of the Amended and Restated Certificate of Incorporation of CBOE Holdings, Inc.; *see also* Securities Exchange Act Release No. 62158 (May 24, 2010), 75 FR 30082 (May 28, 2010) (SR–CBOE–2008–88).

[8] ''Voting Shares'' means those Shares entitled to vote on matters submitted to the Owners, which Voting Shares are held by the Voting Owners. *See* Section 2.1(a)(28) of the Operating Agreement.

[9] As noted in Section 3.2 of the Operating Agreement, it is the intention of the Owners that no other members of CBSX (other than Affiliates of CBOE) be owners of Series A Voting Shares, and that no additional Series A Voting Shares be authorized, created or issued for such purpose; provided however, that this provision is not intended to limit or restrict any rights of CBOE to transfer any of its Series A Voting Shares with the prior approval of the Commission as provided for in Article VI, including Section 6.14, of the Operating Agreement, or any other provision thereof, or any rights to be acquired by a transferee of those Shares as provided therein.

[10] The Operating Agreement also creates a Series C Non-Voting Restricted Shares; however, these Shares are not entitled to vote on any matter submitted to a vote of the Owners, and there are currently no Series C shares outstanding. *See* Section 8.9 of the Operating Agreement.

Commission and CBOE over the controlling parties and the Owners; and the ownership and voting restrictions on Owners.[11] These provisions, as contained in the Operating Agreement and applicable CBOE rules, will remain unchanged after the Transaction except as otherwise described below.

Summary of Proposed Rule Change

Except as described below, the Exchange's governing documents, rules and manner of operation, restrictions on ownership and transfer, registration as a national securities exchange under Section 6 of the Act and the continuance of the Exchange as an SRO[12] are proposed to remain unchanged.[13] The instant rule change proposes changes to the Exchange's Certificate of Incorporation and By-Laws as described below to reflect the change of ownership due to the Transaction. In addition, several other amendments are proposed to the Exchange governance documents in order to enhance governance mechanisms and generally make them generally consistent with the parallel provisions of the current governance documents of other SROs. Certain provisions of the current NSX By-Laws that are historic in nature are also proposed to be deleted as no longer applicable. In addition, certain amendments, as described below and in conjunction with a contemporaneous rule filing submitted by CBOE, are proposed to the CBSX Operating Agreement in connection with the Transaction. In the aggregate, the proposed amendments are intended to enable NSX to continue to have the authority and ability to effectively fulfill its self-regulatory duties pursuant to the Act and the rules promulgated thereunder. The proposed amendments will also enhance the ownership and voting limitations applicable to SROs in order to preclude undue influence over or interference with the SROs' regulatory functions and fulfillment of regulatory duties under the Act.

a. Amended and Restated Certificate of Incorporation of NSX

Under the proposed rule change, the requirement that the Exchange be at all times wholly owned by Holdings is proposed to be changed to allow for the consummation of the Transaction and acquisition of all of the outstanding NSX stock by CBSX. To make clear that NSX will be entirely owned by CBSX (regardless of whether outstanding NSX stock is voting or non-voting), the proposed A&R Certificate would be modified in Article IV to provide that, at all times, all of the outstanding stock of the Exchange shall be owned by CBSX.

In addition, new language is proposed to be added to Articles VII and XI of the NSX Certificate of Incorporation designed to enable the Exchange Board and the Commission to continue to exercise appropriate oversight of the Exchange. In conformity with similar language in the recently approved charter documents of other exchanges,[14] a provision is proposed to be added to each of Articles VII and XI to make clear that before any amendment to, or repeal of, any provision of the Exchange By-Laws and/or Certificate of Incorporation shall be effective, those changes shall be submitted to the Exchange Board and, if such amendment or repeal must be filed with or filed with and approved by the Commission, then the proposed changes shall not become effective until filed with or filed with and approved by the Commission.[15] For purposes of clarity regarding Commission approval of Exchange rule filings, specific reference to Section 19 of the Act and the rules promulgated thereunder is also introduced to Articles VII and XI.

Finally, consistent with similar provisions in the charter documents of other exchanges,[16] the proposed A&R Certificate in Article V is amended to allow directors (other than ETP Holder Directors) to be removed with or without cause by a majority vote of stockholders. This amendment is intended to promote more efficient Exchange governance while continuing to preserve the fair representation of ETP Holders through the ETP Holder Director election process contained in the Exchange's By-Laws.

b. Second Amended and Restated By-Laws of NSX

Under the proposed rule change, due to the transfer of ownership of the Exchange from Holdings to CBSX, references in the Exchange By-Laws specific to Holdings are proposed to be replaced with references to CBSX. Specifically, Section 3.2(c) is proposed to be modified to provide that no two or more directors of NSX may be partners, officers or directors of the same person or be affiliated with the same person, unless such affiliation is with a national securities exchange or CBSX. In addition, Section 10.2 is proposed to be modified to provide that in no event shall members of the CBSX Board who are not also members of the NSX Board, or any officers, staff, counsel or advisors of CBSX who are not also officers, staff, counsel or advisors of NSX (or any committees of NSX), be allowed to participate in any meetings of the NSX Board (or any committee of NSX) pertaining to the self-regulatory function of NSX (including disciplinary matters). These amendments recognize CBSX as direct owner of the Exchange while preserving a mechanism to prevent undue influence over the Exchange's self-regulatory functions.

In connection with the ownership of NSX by CBSX, an additional Section 10.1(b) is proposed to be added to provide that, for so long as CBSX controls NSX, NSX shall promptly inform the CBSX board of directors, in writing, in the event that NSX has, or experiences, a deficiency related to its ability to carry out its obligations as a national securities exchange under the Act, including if NSX does not have or is not appropriately allocating such financial, technological, technical and personnel resources as may be necessary or appropriate for NSX to meet its obligations under the Act.

In addition, in conformity with the board composition provisions of other more recent approvals involving other market centers,[17] certain NSX Board composition changes are proposed in order to streamline and promote the efficiency and effectiveness of NSX Board governance. Specifically, By-Law provisions regarding the number of directors on the NSX Board are proposed to be amended to allow any number between (and including) seven (7) and twenty-five (25). In addition, the requirement that at least 50% of NSX

[11] Section 6.12(a) of the Operating Agreement provides that no person (other than CBOE), either alone or together with its Affiliates, may directly or indirectly own more than a 20% Percentage Interest in CBSX (''Concentration Limitation''). In addition, Section 8.10 provides that if an Owner of Voting Shares, alone or together with any Related Persons, owns more than 20% of the Outstanding Voting Shares (''Excess Shares''), such Owner and Related Persons shall have no voting rights with respect to the Excess Shares.

[12] *See* 15 U.S.C. 78c(a)(26).

[13] As described in the Commission's order approving the Exchange's demutualization; *see* Securities Exchange Act Release No. 53963 (June 8, 2006), 71 FR 34660 (June 15, 2006) (SR–NSX–2006–03).

[14] *See* Article 6 of the Certificate of Incorporation of EDGA Exchange, Inc.; and Article 9 of Certificate of Incorporation of C2 Options Exchange, Inc.

[15] *See* A&R Certificate of Incorporation, Articles Seventh and Eleventh.

[16] *See* A&R Certificate of Incorporation, Article Fifth, (b); *see also* Article II, Section 7(a) of the Amended and Restated By-Laws of BATS Exchange, Inc.; and Article II, Section 7(a) of the Amended and Restated Bylaws of EDGA Exchange, Inc.

[17] *See* Third Amended and Restated Bylaws of the C2 Options Exchange, Inc.; Second Amended and Restated By-Laws of CBOE; Amended and Restated By-Laws of BATS Exchange, Inc.; and the Amended and Restated Bylaws of EDGA Exchange, Inc.

Board members be ''Independent'' Directors is proposed to be replaced with a requirement that at least 50% of NSX Board members be ''Non-Industry'' Directors, at least one of whom must qualify as Independent.[18] The category of ''At Large'' Directors, which under current By-Laws means directors who are not Independent, is eliminated as unnecessary.[19] Finally, the category of CBOE Director, and corresponding provisions discussing CBOE ownership of Class B stock and related Board representation, are proposed to be deleted as obsolete.[20]

As a result, the proposed NSX Board composition after the closing of the Transaction will consist of not fewer than seven (7) and not more than twenty-five (25) directors [21] and at all times shall include the Chief Executive Officer of the Exchange; at least 50% Non-Industry Directors (at least one of whom shall be an Independent Director); and such number of ETP Holder Directors as is necessary to comprise at least 20% of the NSX Board.[22] For purposes of calculating the percentage of Non-Industry Directors, the Chief Executive Officer of the Exchange shall be excluded.[23]

By-Law provisions relating to the terms of office of each type of director is also amended from staggered three year terms to one year terms (other than the CEO Director, which individual's term expires upon ceasing to be Exchange Chief Executive Officer).[24] The Exchange believes that the change to annual from staggered three year director terms, which amendment is consistent with the parallel provisions of the current governance documents of other SROs,[25] promotes more efficient Exchange governance and effective ETP Holder representation.

With respect to the filling of vacancies on the NSX Board,[26] the A&R By-Laws are proposed to be amended to differentiate the procedure depending on whether the vacancy is of an ETP Holder Director or another type of director. Under current Exchange By-Laws, no such distinction is made. The Exchange believes a distinction is necessary in order to promote, in the event of a vacancy of an ETP Holder Director, the fair representation of ETP Holders on the NSX Board. For non-ETP Holder Directors, the A&R By-Laws provide, consistent with current Exchange By-Laws, that any vacancy may be filled by vote of a majority of the directors then in office, although less than a quorum, or by a sole remaining director, provided such new director qualifies for the category in which the vacancy exists. A director elected to fill a vacancy shall hold office until the next annual meeting of stockholders, subject to the election and qualification of his or her successor and to his or her earlier death, resignation, disqualification or removal.[27] Regarding the filling of vacancies of ETP Holder Directors, the ETP Holder Director Nominating Committee shall either recommend an individual to the NSX Board to be elected to fill such vacancy or provide a list of recommended individuals to the NSX Board from which the NSX Board shall elect the individual to fill such vacancy. The NSX Board shall elect only individuals recommended by the ETP Holder Director Nominating Committee. The proposed amendments conform to the more recently approved analogous provisions of the governance documents of another exchange.[28]

Certain other edits are proposed to the current Exchange By-Laws to promote clarity and efficient governance mechanisms. Such edits conform to the analogous provisions of the charter documents of other more recently approved exchanges. Specifically, edits are proposed with respect to the procedures for election of ETP Holder Directors.[29] In order to promote fair representation among all ETP Holders, A&R By-Laws Section 3.5(d) is proposed to be amended to provide that no ETP Holder, together with its affiliates, may account for more than fifty percent (50%) of the signatures endorsing a particular candidate, and any signatures of such ETP Holder, together with its affiliates, in excess of fifty percent (50%) limitation shall be disregarded. Similarly, in order to promote fair representation among all ETP Holders, in an election among ETP Holders of candidates for ETP Holder Director, A&R By-Laws Section 3.5(e) is proposed to be amended to provide that any vote must be cast for a person duly nominated on the list of candidates and that no ETP Holder, together with its affiliates, may account for more than twenty percent (20%) of the votes cast for a candidate, and any votes cast by such ETP Holder, together with its affiliates, in excess of such twenty percent (20%) limitation shall be disregarded.

In addition, the A&R By-Laws are amended to include a fuller description of the composition and authority of Exchange committees.[30] These edits are intended to promote transparency and efficient governance. The description of the Executive Committee, which has authority to act on behalf of the full NSX Board under certain circumstances, is amended to clarify that the composition requirements of such committee mirror the requirements applicable to the full Board.[31] Regarding other Exchange committees, descriptions of the duties and composition requirements are included for each of the ETP Holder Director Nominating Committee, the Executive Compensation Committee, the Audit Committee, the Governance and Nominating Committee, the Appeals Committee and the Business Conduct Committee. Reference to a Securities Committee is deleted as obsolete.

Consistent with analogous provisions of recently approved governance documents of other exchanges, the

[18] *See* A&R By-Laws Section 3.2 (Board composition requirements) and 1.1 (definitions of ''Industry Director'' and ''Non-Industry Director''). *See also* Third Amended and Restated Bylaws of the C2 Options Exchange, Inc., Article III, Section 1; Second Amended and Restated Bylaws of the CBOE Article III, Section 1; and the Amended and Restated By-Laws of BATS Exchange, Inc., Article I.

[19] *See* A&R By-Laws Section 1.5 (definitions) and deletions to current By-Laws in Sections 3.2(b) and 3.4(e).

[20] *See* deletions to current By-Laws in Sections 1.5, 3.2(b), 3.3, 3.4(d), 3.5(g) and 3.7.

[21] *See* A&R By-Laws Section 3.2(a).

[22] *See* A&R By-Laws Section 3.2(b). *See also* Third Amended and Restated Bylaws of the C2 Options Exchange, Inc. Article III, Section 3.1; Second Amended and Restated Bylaws of CBOE Section III, Article 3.1; and the Amended and Restated By-Laws of BATS Exchange, Inc., Article III, Section 2.

[23] *See* Third Amended and Restated Bylaws of the C2 Options Exchange, Inc., Article III, Section 3.1; and Second Amended and Restated Bylaws of the CBOE. Section III, Article 3.1.

[24] *See* A&R By-Laws Section 3.4(a) through (e).

[25] *See* Third Amended and Restated Bylaws of the C2 Options Exchange, Inc., Article III, Section 3.1; Second Amended and Restated Bylaws of the CBOE Article III, Section 3.1.

[26] *See* A&R By-Laws Section 3.7. *See also* Third Amended and Restated Bylaws of the C2 Options Exchange, Inc., Article III, Section 3.5; Second Amended and Restated Bylaws of the CBOE Section III, Article 3.5; Amended and Restated By-Laws of BATS Exchange, Inc., Article III, Section 6; and Amended and Restated Bylaws of EDGA Exchange, Inc., Article III, Section 6.

[27] *See* A&R By-Laws Section 3.7(a)(i).

[28] *See* Third Amended and Restated Bylaws of the C2 Options Exchange, Inc., Article III, Section 3.5.

[29] *See* A&R By-Laws Section 3.5(d) and (e). *See also* the Amended and Restated By-Laws of BATS Exchange, Inc., Article III, Section 4.

[30] *See* A&R By-Laws Sections 5.5 through 5.13. *See also* Amended and Restated By-Laws of BATS Exchange, Inc., Article V, Section 6, and Article VI, Section 2.

[31] *See* A&R By-Laws Section 5.5(a), which provides, in part, that the Executive Committee at all times shall include the Chief Executive Officer of the Exchange, at least 50% Non-Industry Directors, at least one Independent Director and such number of ETP Holder Directors as is necessary to comprise at least 20% of the Executive Committee; *see also* Amended and Restated By-Laws of BATS Exchange, Inc., Article V, Section 6(e).

procedures for amendments to the Exchange's By-Laws are also proposed to be amended to provide for NSX Board review and, as necessary, Commission approval prior to the effectiveness of any amendments to Exchange By-Laws.[32]

Consistent with the proposed edits to the A&R Certificate and similar provisions in the charter documents of other exchanges,[33] the proposed A&R By-Laws are further proposed to be modified to allow directors (other than ETP Holder Directors) to be removed with or without cause by a majority vote of stockholders. This amendment, consistent with a parallel proposed amendment to the NSX A&R Certificate, is intended to promote more efficient Exchange governance while maintaining the fair representation of ETP Holders through the ETP Holder Director election process as set forth in the A&R By-Laws.

In addition, to clarify that the confidentiality provisions of Section 10.3 may not be interpreted to limit Commission jurisdiction over NSX books and records, a clarifying statement is proposed to be added to A&R By-Laws Section 10.3 to provide that nothing in Section 10.3 shall be interpreted as to limit or impede the rights of the Commission to access and examine Exchange confidential information pursuant to the Federal securities laws and the rules and regulations thereunder, or to limit or impede the ability of any officers, directors, employees or agents of the Exchange to disclose such confidential information to the Commission.[34]

Finally, the proposed A&R By-Laws contain several other non-substantive, conforming edits to the A&R By-Laws that are consistent with the principles outlined above, the Act and the rules promulgated thereunder.[35]

c. CBSX Operating Agreement

i. CBSX's Ownership of NSX

The proposed rule change (for purposes of this Section IIC, as described in conjunction with a parallel rule filing submitted by CBOE) includes several amendments related to CBSX's ownership of NSX. These amendments address the fact that CBSX will become a holding company of NSX after the Transaction to the extent related to CBSX's control of NSX and clarify CBSX's rights and responsibilities related to its role as a holding company of a registered national securities exchange (amendments related to such responsibilities are further discussed below). For example, the proposed rule change amends Operating Agreement Section 1.6 to provide that CBSX's purposes (and any other lawful purposes related to those purposes) will be (1) to act as a trading market for securities other than options and (2) to act as a holding company of NSX. The proposed rule change also amends several Operating Agreement provisions to clarify that certain references to CBSX include its subsidiaries, including NSX.[36]

In addition, the proposal amends Section 6.12 to provide that the Concentration Limitation described in that section does not apply to CBOE or CBOE Holdings, and to expand applicability of the Concentration Limitation to persons and their Related Persons[37] rather than to persons and their Affiliates.[38] The proposal also amends Operating Agreement Section 6.12(c) and (e) to impose on NSX equity trading permit holders the Concentration Limitation prohibitions described in those paragraphs, which are currently only imposed on CBOE Trading Permit Holders. The proposal makes similar amendments to Operating Agreement Section 8.10 to expand applicability of the voting restriction described in that section to persons and their Related Persons and to provide that if any person and its Related Persons, not just a CBOE Trading Permit Holder, exceed the Concentration Limitation set forth in Section 6.12 of the Agreement, then the Owner and its Related Persons will have no voting rights with respect to the shares in excess of such limitation unless such Owner satisfies certain requirements set forth in proposed Section 8.10(b) through (d), which are similar to the requirements set forth in Section 6.12(b), (c) and (e). The proposed rule change also extends the applicability of the voting restriction in Section 8.10 to voting agreements, plans and arrangements.

The proposal also amends Operating Agreement Section 9.15(a)(9) to clarify that with respect to a sale of material assets or ownership interests that requires approval pursuant to Section 9.15, ''material assets or ownership interests'' include subsidiaries of CBSX. In addition, the proposed rule change adds Operating Agreement Section 15.19 to the Operating Agreement, which obligates CBSX, when voting as NSX's sole shareholder in an election of the NSX board of directors, to vote in favor of ETP Holder Directors (as defined in the NSX By-Laws) that were nominated in accordance with the procedures set forth in NSX's Certificate of Incorporation and By-Laws.

ii. Self-Regulatory Function of NSX

The proposed rule change adds various provisions designed to protect the independence of the self-regulatory

[32] *See* A&R By-Laws Section 8.1. *See also* Amended and Restated By-Laws of BATS Exchange, Inc., Article IX, Section 1.

[33] *See* A&R By-Laws Section 3.8; *see also* Article II, Section 7(a) of the Amended and Restated By-Laws of BATS Exchange, Inc.; and Article II, Section 7(a) of the Amended and Restated Bylaws of EDGA Exchange, Inc.

[34] *See* A&R By-Laws Section 10.3.

[35] Non-substantive, conforming edits to the A&R By-Laws are reflected in the following Sections of the A&R By-Laws: 3.2(d) (clarifying that directors may not serve if subject to statutory disqualification as such term is defined in the Act); 3.7(c) (providing that any grace periods for re-qualification of a director must be for only a reasonable length of time); 3.17(clarifying that NSX Board authority to interpret Exchange By-Laws remains subject to the Act); 5.2(clarifying that the composition requirements set forth in description of each committee in Article V control, and that responsibility for maintenance of committee composition in connection with new committee appointments resides with the Chairman); 5.6 (specifying that the Regulatory Oversight Committee shall at all times be comprised entirely of Non-Industry Directors); and 6.3 (clarifying that officer disqualification will terminate an officer's term of office). Relevant definitions are also added to Section 1.1.

[36] *See* proposed Sections 1.6, 9.15(a)(9) and (1) of the Operating Agreement.

[37] Proposed Rule 2.1(a)(23) of the Operating Agreement defines ''Related Person'' as (A) with respect to any person, all ''affiliates'' as such term is defined in Rule 12b–2 of the Exchange Act); (B) any person associated with a member (as the phrase ''person associated with a member'' is defined under Section 3(a)(21) of the Exchange Act); (C) any two or more persons that have any agreement, arrangement or understanding (whether or not in writing) to act together for the purpose of acquiring, voting, holding or disposing of shares of CBSX; (D) in the case of a person that is a company, corporation or similar entity, any executive officer (as defined under Rule 3b–7 of the Exchange Act) or director of such person and, in the case of a person that is a partnership or a limited liability company, any general partner, managing member of manager of such person, as applicable; (E) in the case of a person that is a natural person, any relative or spouse of such natural person, or any relative of such spouse who has the same home as such natural person or who is a director or officer of CBSX or any of CBSX's parents or subsidiaries; (F) in the case of a person that is an executive officer (as defined under Rule 3b–7 of the Exchange Act) or a director of a company, corporation or similar entity, such company, corporation or entity, as applicable; and (G) in the case of a person that is a general partner, managing member or manager of a partnership or limited liability company, such partnership or limited liability company, as applicable. Under this definition, Related Persons include Affiliates and thus extends the Concentration Limitation imposed by proposed Rule 6.12 to a broader group of persons.

[38] Rule 2.1(a)(1) of the Operating Agreement defines ''Affiliate'' as, with respect to any person, any other person that directly, or indirectly through one or more intermediaries, controls, is controlled by, or is under common control with, such person. As used in this definition, ''control'' means the possession, directly or indirectly, of the power to direct or cause the direction of management and policies of a person, whether through the ownership of voting securities, by contract or otherwise with respect to such person.

function of NSX and to clarify NSX's jurisdiction with respect to CBSX, but only to the extent related to CBSX's control of NSX.[39] For example, the proposed rule change adds Operating Agreement Section 5.7(b), which, among other things:

- For so long as CBSX controls NSX, only to the extent related to the activities of NSX, requires CBSX Owners, board of directors, officers and employees to give due regard to the preservation of the independence of the self-regulatory function of NSX and to its obligations under the Act;
- Prohibits these persons from taking any actions that would interfere with the effectuation of any decisions by the NSX board of directors relating to NSX's regulatory functions, including disciplinary matters, or with NSX's ability to carry out its responsibilities under the Act; and
- Requires CBSX to comply with Federal securities laws and the rules and regulations thereunder, and requires CBSX and its officers, directors, employees and agents to cooperate with the Commission and NSX pursuant to and to the extent of their regulatory authority.

In addition, the proposed rule change amends Operating Agreement Section 6.15 to clarify possession of CBSX's and its Owners books and records by the Facility and NSX in connection with their oversight pursuant to the Act. The proposed rule change amends Operating Agreement Section 6.15(a):[40]

- To clarify that the Owners acknowledge that the books, records, premises, officers, directors, agents, and employees of the Owners will be deemed to be the books, records, premises, officers, directors, agents, and employees of CBOE for the purpose of and subject to oversight pursuant to the Act, but only to the extent they are related to the Facility; and
- To add the provision that the Owners acknowledge that the books, records, premises, officers, directors, agents, and employees of the Owners will be deemed to be the books, records, premises, officers, directors, agents, and employees of NSX for the purpose of and subject to oversight pursuant to the Act, but only to the extent they are related to the activities of NSX.

Similarly, the proposed rule change amends Operating Agreement Section 6.15(b):[41]

- To clarify that the books, records, premises, officers, directors, agents, and employees of CBSX will be deemed to be the books, records, premises, officers, directors, agents, and employees of CBSX for the purpose of and subject to oversight pursuant to the Act, but only to the extent related to the Facility; and
- To add the provision that the books, records, premises, officers, directors, agents, and employees of CBSX will be deemed to be the books, records, premises, officers, directors, agents, and employees of NSX for the purpose of and subject to oversight pursuant to the Act, but only to the extent related to the activities of NSX.[42]

The proposal also amends Operating Agreement Section 6.15(c) to provide that CBSX and the Owners and their respective officers, directors, agents, and employees,[43] irrevocably submit to the jurisdiction of the U.S. Federal courts, the Commission, CBOE and NSX for the purposes of any suit, action, or proceeding pursuant to U.S. Federal securities laws or the rules or regulations thereunder, commenced or initiated by the Commission arising out of, or relating to, the Facility or the Company's control of NSX, as applicable.

In addition, the proposed rule change amends Operating Agreement Sections 9.15(c) and 9.16 to provide that CBSX directors agree to comply with the Federal securities laws and the rules and regulations thereunder, and to cooperate with the Commission, CBOE, and NSX pursuant to their regulatory authority, as applicable, and the provisions of the Operating Agreement. The proposal also amends Operating Agreement Section 9.15(c) to provide that CBSX directors will take into consideration whether any actions taken or proposed to be taken as a director for or on behalf of CBSX, or any failure or refusal to act, would constitute interference with CBOE's or NSX's regulatory functions and responsibilities, as applicable, in violation of the Operating Agreement or the Act.[44]

Additionally, the proposal amends Operating Agreement Section 14.1(a) to provide that, for so long as CBSX controls NSX, before any amendment, alteration or repeal of any provision of the Operating Agreement, to the extent related to CBSX's control of NSX, will be effective, such amendment, alteration or repeal must be submitted to the NSX board of directors, and if CBOE and the NSX board of directors determine that such amendment, alteration or repeal must be filed with or filed with and approved by the Commission, then such amendment, alteration or repeal will not become effective until filed with or filed with and approved by the Commission, as the case may be. The proposal also adds a 10-day notice provision for any amendment, alteration, or repeal of the Operating Agreement made pursuant to Operating Agreement Section 14.1(a) to provide CBOE and NSX with sufficient opportunity to review any potential regulatory impacts of such amendment, alteration, or repeal before it becomes effective.

The proposal also amends Operating Agreement Section 15.2 to provide that nothing in the Operating Agreement will be interpreted to limit or impede the rights of the Commission, CBOE, or NSX to access and examine any Confidential Information (as defined in the Operating Agreement) pursuant to the U.S. Federal securities laws and the rules thereunder, or to limit or impede the ability of an Owner or an officer, director, agent or employee of an Owner to disclose any Confidential Information to the Commission, CBOE, or NSX. Proposed Operating Agreement Section 15.2 also provides that the obligation of Owners not to disclose Confidential Information described in that section does not apply to CBOE's or NSX's communications with the Commission with respect to the conduct of the Facility's business or NSX's business, respectively. In addition, the proposal amends the representation being made by Owners in Operating Agreement Section 15.17(a) with respect to the validity and enforceability of the Operating Agreement by excepting the requirement, as applicable to the Facility or NSX (with respect to CBSX's

[39] *See also, infra,* footnote 45.

[40] Section 6.15(a) of the Operating Agreement currently provides: ''The Owners acknowledge that to the extent they are related to [CBSX's] activities, the books, records, premises, officers, directors, agents, and employees of the Owners shall be deemed to be the books, records, premises, officers, directors, agents, and employees of CBOE for the purpose of and subject to oversight pursuant to the Exchange Act.''

[41] Section 6.15(b) of the Operating Agreement currently provides: ''The books, records, premises, officers, directors, agents, and employees of [CBSX] shall be deemed to be the books, records, premises, officers, directors, agents, and employees of CBOE for the purpose of and subject to oversight pursuant to the Exchange Act.''

[42] CBSX's complete records and books of account must be subject at all times to inspection and examination by CBOE (to the extent related to the Facility), NSX (to the extent related to CBSX's control of NSX), and the Commission at no additional charge to CBOE, NSX and the Commission, as applicable. *See* proposed Section 13.2 of the Operating Agreement.

[43] Proposed Operating Agreement Section 6.15(c) (consent to jurisdiction) and (d) (consent in writing to applicability) also extend the requirements of these provisions to all agents and employees of the Company and its Owners, rather than only agents and employees whose principal place of business and residence is outside of the United States.

[44] Interference with respect to the Facility will be determined by the CBSX board designees of CBOE. *See* proposed Section 9.15(c) of the Operating Agreement.

control of NSX), that the portions of the Operating Agreement that constitute rules of a facility of an exchange or rules of a self-regulatory organization, as applicable, be filed for public comment and approval by the Commission from that representation.[45]

iii. Facility of CBOE

The proposed rule change amends various provisions to clarify that the part of CBSX that constitutes the Facility is a facility of CBOE under the Act, while the part of CBSX that relates to its control of NSX will not be a facility of CBOE. For example, the proposal amends Operating Agreement Section 1.7 to clarify that the Facility (and not CBSX to the extent it will act as a holding company for NSX) is a facility of CBOE under the Act, and therefore the Facility will be subject to self-regulation by CBOE and oversight by the Commission. The proposal also amends Operating Agreement Section 1.8 to clarify that only the Facility is a facility of CBOE.[46]

iv. Additional Changes

Finally, the proposed rule change makes several non-substantive technical and conforming changes throughout the Operating Agreement, including: Updating the name and date of the Operating Agreement; updating the current Owners and their current percentage interests and CBSX shares owned;[47] replacing references to CBOE members with CBOE trading permit holders;[48] updating the table of contents and section references; and adding new defined terms and renumbering the defined terms as necessary.[49]

2. Statutory Basis

The Exchange believes the proposed rule change is consistent with Section 6 of the Act,[50] and the rules and regulations thereunder and, in particular, the requirements of Section 6(b) of the Act.[51] Specifically, the Exchange believes the amendments to the CBSX Operating Agreement further the objective of Section 6(b)(1) of the Act because they preserve the independence of each of CBOE's and NSX's self-regulatory functions and allow each SRO to fulfill its self-regulatory duties. In particular, the addition of Operating Agreement Section 5.7(b) described above is intended to preserve the independence of NSX's self-regulatory function and ensure that NSX is able to obtain any information it needs from the specified parties to detect and deter any fraudulent and manipulative acts in its marketplace and carry out its regulatory responsibilities under the Act.[52] Similarly, the amendments to Operating Agreement Section 6.15(a) and (b) as described above (that clarify that CBSX's books and records with respect to the Facility and NSX's activities will be subject to the necessary oversight of the Act) are consistent with Section 6(b)(5) of the Act in that they provide the Commission, CBOE and NSX with access to necessary information that will allow CBOE and NSX to efficiently and effectively enforce compliance with the Act and their respective rules, as well as allow the Commission to provide proper oversight, which will ultimately promote just and equitable principles of trade and protect investors. The amendment to Operating Agreement Section 14.1(a) as described above is intended to make sure that NSX receives notice of any amendment to the Operating Agreement so that NSX can make any filings with the Commission necessary for NSX to fulfill its regulatory duties under the Act.

The Exchange also believes that this proposed rule change furthers the objectives of Section 6(b)(5)[53] of the Act because the amendments summarized in this filing will enable that CBSX and NSX continue to have governance and regulatory structures designed to promote just and equitable principles of trade, to remove impediments, and perfect the mechanism of a free and open market and a national market system and, in general, to protect investors and the public interest. The instant rule filing enables NSX to continue to have the authority and ability to effectively fulfill its self-regulatory duties pursuant to the Act and the rules promulgated thereunder. The proposed amendments to the Exchange's charter documents and the CBSX Operating Agreement are further intended to enhance the ownership and voting limitations applicable to SROs in order to preclude undue influence over or interference with SRO regulatory functions and fulfillment of regulatory duties under the Act. The proposed rule changes are intended to protect and maintain the integrity of the self-regulatory functions of NSX, and to allow it to carry out its regulatory responsibilities under the Act while allowing CBOE to maintain its regulatory jurisdiction and authority over the Facility.

The Exchange represents that it remains committed to its role as a national securities exchange and does not believe that the proposed change of ownership will undermine its responsibilities for regulating its marketplace. The proposed rule change provides transparency and certainty, and promotes efficiency, with respect to the governance and corporate structure of the Exchange and the status of CBSX as both a facility of CBOE and the holding company of NSX. In so doing, the proposed rule change promotes the maintenance of a fair and orderly market, the protection of investors and the protection of the public interest.

Moreover, the Exchange is not proposing any significant changes to its existing operational and trading structure in connection with the change in ownership. Instead, NSX represents that the proposed rule change consists of changes to the NSX Certificate of Incorporation and By-Laws, and to the CBSX Operating Agreement, to allow for ownership of NSX by CBSX, to enhance the governance structure of NSX, and to enhance the ability of NSX and CBOE to fulfill their regulatory functions under the Act. With respect to the proposed amendments to the NSX charter documents, the proposed edits are generally consistent with parallel provisions of other more recently approved SRO governance documents. The Exchange believes that the proposed rule change allows CBOE to maintain its regulatory jurisdiction and authority over the Facility and NSX to remain an independent self-regulatory organization and is consistent with the Act, the rules promulgated thereunder and the principles articulated by the Commission.[54]

[45] The rule change submitted by CBOE in connection with its partial ownership interest in CBSX adds a new rule, CBOE Rule 2.50, to further preserve the self-regulatory function of NSX. For example, among other things, CBOE Rule 2.50 proposes a policy that CBOE, as a partial owner of CBSX, will not take any action related to NSX's activities that would interfere with NSX's efforts to carry out its self-regulatory obligations under the Act and the rules and regulations thereunder.

[46] *See* also proposed Sections 6.2(e), 6.15(c) and (d), 9.2(d), 9.15(a)(14) and 14.1(a) for additional such clarifications.

[47] *See* proposed Section 3.2(d) of and signature page and Exhibit A to the Operating Agreement.

[48] *See* proposed Sections 6.12(c) and (e) and 8.10 of the Operating Agreement.

[49] *See* proposed Section 2.1 of the Operating Agreement. Certain other governance amendments not directly related to the Transaction are also proposed to the Operating Agreement, as further described in the CBOE rule filing filed in connection herewith.

[50] 15 U.S.C. 78f.

[51] 15 U.S.C. 78f(b).

[52] *See also, supra,* footnote 45.

[53] 15 U.S.C. 78f(b)(5).

[54] *See* Securities Exchange Act Release No. 50699 (November 18, 2004), 69 FR 71126 (December 8, 2004) (File No. S7–39–04).

B. Self-Regulatory Organization's Statement on Burden on Competition

The Exchange does not believe that the proposed rule change will impose any burden on competition that is not necessary or appropriate in furtherance of the purposes of the Act.

C. Self-Regulatory Organization's Statement on Comments on the Proposed Rule Change Received From Members, Participants or Others

The Exchange has neither solicited nor received written comments on the proposed rule change.

III. Date of Effectiveness of the Proposed Rule Change and Timing for Commission Action

Within 45 days of the date of publication of this notice in the **Federal Register** or within such longer period up to 90 days (i) As the Commission may designate if it finds such longer period to be appropriate and publishes its reasons for so finding or (ii) as to which the self-regulatory organization consents, the Commission will:

(A) By order approve or disapprove the proposed rule change, or

(B) Institute proceedings to determine whether the proposed rule change should be disapproved.

IV. Solicitation of Comments

Interested persons are invited to submit written data, views, and arguments concerning the foregoing, including whether the proposed rule change is consistent with the Act. Comments may be submitted by any of the following methods:

Electronic Comments

- Use the Commission's Internet comment form (*http://www.sec.gov/rules/sro.shtml*); or
- Send an email to *rule-comments@sec.gov.* Please include File Number SR–NSX–2011–14 on the subject line.

Paper Comments

- Send paper comments in triplicate to Elizabeth M. Murphy, Secretary, Securities and Exchange Commission, 100 F Street NE., Washington, DC 20549–1090.

All submissions should refer to File Number SR–NSX–2011–14. This file number should be included on the subject line if email is used. To help the Commission process and review your comments more efficiently, please use only one method. The Commission will post all comments on the Commission's Internet Web site (*http://www.sec.gov/rules/sro.shtml*). Copies of the submission, all subsequent amendments, all written statements with respect to the proposed rule change that are filed with the Commission, and all written communications relating to the proposed rule change between the Commission and any person, other than those that may be withheld from the public in accordance with the provisions of 5 U.S.C. 552, will be available for Web site viewing and printing in the Commission's Public Reference Room, 100 F Street NE., Washington, DC 20549, on official business days between the hours of 10 a.m. and 3 p.m. Copies of the filing will also be available for inspection and copying at the Exchange's principal office. All comments received will be posted without change; the Commission does not edit personal identifying information from submissions. You should submit only information that you wish to make publicly available. All submissions should refer to File Number SR–NSX–2011–14 and should be submitted on or before December 23, 2011.

For the Commission, by the Division of Trading and Markets, pursuant to delegated authority.[55]

Kevin M. O'Neill,

Deputy Secretary.

[FR Doc. 2011–30997 Filed 12–1–11; 8:45 am]

BILLING CODE 8011–01–P

[55] 17 CFR 200.30–3(a)(12).

SECURITIES AND EXCHANGE COMMISSION

[Release No. 34–65836; File No. SR–NASDAQ–2011–153]

Self-Regulatory Organizations; The NASDAQ Stock Market, LLC; Notice of Filing and Immediate Effectiveness of Proposed Rule Change To Establish Fees for a Direct Market Data Product, NASDAQ Options Trade Outline (''NOTO'')

November 28, 2011.

Pursuant to Section 19(b)(1) of the Securities Exchange Act of 1934 (''Exchange Act'') [1] and Rule 19b–4 thereunder,[2] notice is hereby given that, on November 16, 2011, The NASDAQ Stock Market LLC (''NASDAQ'' or ''Exchange'') filed with the Securities and Exchange Commission (the ''Commission'') the proposed rule change as described in Items I, II, and III below, which Items have been prepared by the Exchange. The Commission is publishing this notice to solicit comments on the proposed rule change from interested persons.

I. Self-Regulatory Organization's Statement of the Terms of Substance of the Proposed Rule Change

The Exchange proposes to amend NASDAQ Rule 7054, Charges for Membership, Services, and Equipment, by establishing fees for a direct data product known as the NASDAQ Options Trade Outline (''NOTO'') market data product. The proposed fees will become effective on December 1, 2011.

The text of the proposed rule change is available on the Exchange's Web site at *http://www.nasdaq.cchwallstreet.com,* at the principal office of the Exchange, and at the Commission's Public Reference Room.

II. Self-Regulatory Organization's Statement of the Purpose of, and Statutory Basis for, the Proposed Rule Change

In its filing with the Commission, the Exchange included statements concerning the purpose of and basis for the proposed rule change and discussed any comments it received on the proposed rule change. The text of these statements may be examined at the places specified in Item IV below. The Exchange has prepared summaries, set forth in sections A, B, and C below, of the most significant aspects of such statements.

A. Self-Regulatory Organization's Statement of the Purpose of, and Statutory Basis for, the Proposed Rule Change

1. Purpose

The purpose of the proposed rule change is to establish fees for the NOTO market data product.[3] NOTO is a market data product offered by the Exchange that is designed to provide proprietary electronic trade data to subscribers. NOTO is available as either an ''End-of-Day'' data product or an ''Intra-Day'' data product, as described more fully below. NOTO is available to any person who wishes to subscribe to it, regardless of whether or not they are a member of the Exchange. The fees for both the End of Day product and the Intra-Day product are uniform for all subscribers. NOTO is available only for internal use and distribution by subscribers.

Data Included in NOTO

NOTO provides information about the activity of a particular option series

[1] 15 U.S.C. 78s(b)(1).

[2] 17 CFR 240.19b–4.

[3] *See* Securities Exchange Act Release No. 65587 (October 18, 2011), 76 FR 65765 (October 24, 2011) (SR–Nasdaq–2011–144).

during a particular trading session. NOTO subscribers will receive the following data:

- Aggregate number of buy and sell transactions in the affected series;
- Aggregate volume traded electronically on the Exchange in the affected series;
- Aggregate number of trades effected on the Exchange to open a position; [4]
- Aggregate number of trades effected on the Exchange to close a position; [5]
- Origin of the orders involved in trades on the Exchange in the affected series during a particular trading session, specifically aggregated in the following categories of participants: customers, broker-dealers, and market makers.

End of Day Product

The End-of-Day product includes the aggregate data described above representing the entire trading session. It is calculated during an overnight process after each trading session and is available to subscribers for download the following morning at approximately 7 a.m., ET.

The monthly subscriber fee for the End of Day product subscribers is $500.00.

Intra-Day Product

The Intra-Day product includes periodic, cumulative data for a particular trading session. The Intra-Day product is produced and updated every ten minutes during the trading day. Data is captured in ''snapshots'' taken every 10 minutes throughout the trading day and is available to subscribers within 5 minutes of the conclusion of each 10 minute period. For example, subscribers to the Intra-Day product will receive the first calculation of intra-day data by 9:44 a.m. ET, which represents data captured from 9:30 a.m. to 9:39 a.m. Subscribers will receive the next update at 9:54 a.m., representing the data previously provided together with data captured from 9:40 a.m. through 9:49 a.m., and so forth. Each update will represent the aggregate data captured from the current ''snapshot'' and all previous ''snapshots.'' The monthly subscriber fee for the Intra-Day product is $750.00.

NOTO provides subscribers data that should enhance their ability to analyze option trade and volume data, and to create and test trading models and analytical strategies. The Exchange believes that NOTO is a valuable tool that subscribers can use to gain comprehensive insight into the trading activity in a particular option series.

2. Statutory Basis

NASDAQ believes that the proposed rule change is consistent with the provisions of Section 6 of the Act,[6] in general, and with Section 6(b)(4) of the Act,[7] in particular, in that it provides an equitable allocation of reasonable fees among users and recipients of NASDAQ data. In adopting Regulation NMS, the Commission granted self-regulatory organizations and broker-dealers increased authority and flexibility to offer new and unique market data to the public. It was believed that this authority would expand the amount of data available to consumers, and also spur innovation and competition for the provision of market data.

The Commission concluded that Regulation NMS—by deregulating the market in proprietary data—would itself further the Act's goals of facilitating efficiency and competition:

> ''[E]fficiency is promoted when broker-dealers who do not need the data beyond the prices, sizes, market center identifications of the NBBO and consolidated last sale information are not required to receive (and pay for) such data. The Commission also believes that efficiency is promoted when broker-dealers may choose to receive (and pay for) additional market data based on their own internal analysis of the need for such data.'' [8]

By removing unnecessary regulatory restrictions on the ability of exchanges to sell their own data, Regulation NMS advanced the goals of the Act and the principles reflected in its legislative history. If the free market should determine whether proprietary data is sold to broker-dealers at all, it follows that the price at which such data is sold should be set by the market as well. NASDAQ believes that NOTO is precisely the sort of market data product that the Commission envisioned when it adopted Regulation NMS.

The Court in NetCoalition, while upholding the Commission's conclusion that competitive forces may be relied upon to establish the fairness of prices, nevertheless concluded that the record in that case did not adequately support the Commission's conclusions as to the competitive nature of the market for NYSEArca's data product at issue in that case. As explained below in NASDAQ's Statement on Burden on Competition, however, NASDAQ believes that there is substantial evidence of competition in the marketplace for data that was not in the record in the NetCoalition case, and that the Commission is entitled to rely upon such evidence in concluding that the fees established in this filing are the product of competition, and therefore in accordance with the relevant statutory standards.[9]

On July 21, 2010, President Barak [sic] Obama signed into law H.R. 4173, the Dodd-Frank Wall Street Reform and Consumer Protection Act of 2010 (''Dodd-Frank Act''), which amended Section 19 of the Act. Among other things, Section 916 of the Dodd-Frank Act amended paragraph (A) of Section 19(b)(3) of the Act by inserting the phrase ''on any person, whether or not the person is a member of the self-regulatory organization'' after ''due, fee or other charge imposed by the self-regulatory organization.'' As a result, all SRO rule proposals establishing or changing dues, fees, or other charges are immediately effective upon filing regardless of whether such dues, fees, or other charges are imposed on members of the SRO, non-members, or both. Section 916 further amended paragraph (C) of Section 19(b)(3) of the Exchange Act to read, in pertinent part, ''At any time within the 60-day period beginning on the date of filing of such a proposed rule change in accordance with the provisions of paragraph (1) [of Section

[4] NOTO will provide subscribers with the aggregate number of ''opening purchase transactions'' in the affected series. An opening purchase transaction is an Exchange options transaction in which the purchaser's intention is to create or increase a long position in the series of options involved in such transaction. NOTO will also provide subscribers with the aggregate number of ''opening writing transactions.'' An opening writing transaction is an Exchange options transaction in which the seller's (writer's) intention is to create or increase a short position in the series of options involved in such transaction.

[5] NOTO will provide subscribers with the aggregate number of ''closing purchase transactions'' in the affected series. A closing purchase transaction is an Exchange options transaction in which the purchaser's intention is to reduce or eliminate a short position in the series of options involved in such transaction. NOTO will also provide subscribers with the aggregate number of ''closing sale transactions.'' A closing sale transaction is an Exchange options transaction an Exchange options transaction [sic] in which the seller's intention is to reduce or eliminate a long position in the series of options involved in such transaction.

[6] 15 U.S.C. 78f.

[7] 15 U.S.C. 78f(b)(4).

[8] *See* Securities Exchange Act Release No. 51808 (June 9, 2005), 70 FR 37496 (June 29, 2005).

[9] It should also be noted that Section 916 of Dodd-Frank Wall Street Reform and Consumer Protection Act of 2010 (''Dodd-Frank Act'') has amended paragraph (A) of Section 19(b)(3) of the Act, 15 U.S.C. 78s(b)(3) to make it clear that all exchange fees, including fees for market data, may be filed by exchanges on an immediately effective basis. Although this change in the law does not alter the Commission's authority to evaluate and ultimately disapprove exchange rules if it concludes that they are not consistent with the Act, it unambiguously reflects a conclusion that market data fee changes do not require prior Commission review before taking effect, and that a formal proceeding with regard to a particular fee change is required only if the Commission determines that it is necessary or appropriate to suspend the fee and institute such a proceeding.

19(b)], the Commission summarily may temporarily suspend the change in the rules of the self-regulatory organization made thereby, if it appears to the Commission that such action is necessary or appropriate in the public interest, for the protection of investors, or otherwise in furtherance of the purposes of this title. If the Commission takes such action, the Commission shall institute proceedings under paragraph (2)(B) [of Section 19(b)] to determine whether the proposed rule should be approved or disapproved.''

NASDAQ believes that these amendments to Section 19 of the Act reflect Congress's intent to allow the Commission to rely upon the forces of competition to ensure that fees for market data are reasonable and equitably allocated. Although Section 19(b) had formerly authorized immediate effectiveness for a ''due, fee or other charge imposed by the self-regulatory organization,'' the Commission adopted a policy and subsequently a rule stipulating that fees for data and other products available to persons that are not members of the self-regulatory organization must be approved by the Commission after first being published for comment. At the time, the Commission supported the adoption of the policy and the rule by pointing out that unlike members, whose representation in self-regulatory organization governance was mandated by the Act, non-members should be given the opportunity to comment on fees before being required to pay them, and that the Commission should specifically approve all such fees.

NASDAQ believes that the amendment to Section 19 reflects Congress's conclusion that the evolution of self-regulatory organization governance and competitive market structure have rendered the Commission's prior policy on non-member fees obsolete.

Specifically, many exchanges have evolved from member-owned not-for-profit corporations into for-profit investor-owned corporations (or subsidiaries of investor owned corporations). Accordingly, exchanges no longer have narrow incentives to manage their affairs for the exclusive benefit of their members, but rather have incentives to maximize the appeal of their products to all customers, whether members or nonmembers, so as to broaden distribution and grow revenues. Moreover, we believe that the change also reflects an endorsement of the Commission's determinations that reliance on competitive markets is an appropriate means to ensure equitable and reasonable prices. Simply put, the change reflects a presumption that all fee changes should be permitted to take effect immediately, since the level of all fees are constrained by competitive forces.

The recent decision of the United States Court of Appeals for the District of Columbia Circuit in *NetCoaliton* [sic] v. *SEC,* No. 09–1042 (DC Cir. 2010), although reviewing a Commission decision made prior to the effective date of the Dodd-Frank Act, upheld the Commission's reliance upon competitive markets to set reasonable and equitably allocated fees for market data. ''In fact, the legislative history indicates that the Congress intended that the market system 'evolve through the interplay of competitive forces as unnecessary regulatory restrictions are removed' and that the SEC wield its regulatory power 'in those situations where competition may not be sufficient,' such as in the creation of a 'consolidated transactional reporting system.' '' [10]

The court's conclusions about Congressional intent are therefore reinforced by the Dodd-Frank Act amendments, which create a presumption that exchange fees, including market data fees, may take effect immediately, without prior Commission approval, and that the Commission should take action to suspend a fee change and institute a proceeding to determine whether the fee change should be approved or disapproved only where the Commission has concerns that the change may not be consistent with the Act.

B. Self-Regulatory Organization's Statement on Burden on Competition

NASDAQ does not believe that the proposed rule change will result in any burden on competition that is not necessary or appropriate in furtherance of the purposes of the Act, as amended. Notwithstanding its determination that the Commission may rely upon competition to establish fair and equitably allocated fees for market data, the NetCoaltion [sic] court found that the Commission had not, in that case, compiled a record that adequately supported its conclusion that the market for the data at issue in the case was competitive.

For the reasons discussed above, NASDAQ believes that the Dodd-Frank Act amendments to Section 19 materially alter the scope of the Commission's review of future market data filings, by creating a presumption that all fees may take effect immediately, without prior analysis by the Commission of the competitive environment.

Even in the absence of this important statutory change, however, NASDAQ believes that a record may readily be established to demonstrate the competitive nature of the market in question.

There is intense competition between trading platforms that provide transaction execution and routing services and proprietary data products. Transaction execution and proprietary data products are complementary in that market data is both an input and a by-product of the execution service. In fact, market data and trade execution are a paradigmatic example of joint products with joint costs. The decision whether and on which platform to post an order will depend on the attributes of the platform where the order can be posted, including the execution fees, data quality and price and distribution of its data products. Without the prospect of a taking order recognizing and reacting to a posted order on a particular platform, the posting of the order would accomplish little.

Without trade executions, exchange data products cannot exist. Data products are valuable to many end users only insofar as they provide information that end users expect will assist them or their customers in making trading decisions.

The costs of producing market data include not only the costs of the data distribution infrastructure, but also the costs of designing, maintaining, and operating the exchange's transaction execution platform and the cost of regulating the exchange to ensure its fair operation and maintain investor confidence. The total return that a trading platform earns reflects the revenues it receives from both products and the joint costs it incurs. Moreover, an exchange's customers view the costs of transaction executions and of data as a unified cost of doing business with the exchange. A broker-dealer will direct orders to a particular exchange only if the expected revenues from executing trades on the exchange exceed net transaction execution costs and the cost of data that the broker-dealer chooses to buy to support its trading decisions (or those of its customers). The choice of data products is, in turn, a product of the value of the products in making profitable trading decisions. If the cost of the product exceeds its expected value, the broker-dealer will choose not to buy it. Moreover, as a broker-dealer chooses to direct fewer orders to a

[10] *NetCoaltion* [sic], at 15 (quoting H.R. Rep. No. 94–229, at 92 (1975), as reprinted in 1975 U.S.C.C.A.N. 321, 323).

particular exchange, the value of the product to that broker-dealer decreases, for two reasons. First, the product will contain less information, because executions of the broker-dealer's orders will not be reflected in it. Second, and perhaps more important, the product will be less valuable to that broker-dealer because it does not provide information about the venue to which it is directing its orders. Data from the competing venue to which the broker-dealer is directing orders will become correspondingly more valuable.

Thus, a super-competitive increase in the fees charged for either transactions or data has the potential to impair revenues from both products. ''No one disputes that competition for order flow is 'fierce'.'' [11] However, the existence of fierce competition for order flow implies a high degree of price sensitivity on the part of broker-dealers with order flow, since they may readily reduce costs by directing orders toward the lowest-cost trading venues. A broker-dealer that shifted its order flow from one platform to another in response to order execution price differentials would both reduce the value of that platform's market data and reduce its own need to consume data from the disfavored platform. Similarly, if a platform increases its market data fees, the change will affect the overall cost of doing business with the platform, and affected broker-dealers will assess whether they can lower their trading costs by directing orders elsewhere and thereby lessening the need for the more expensive data.

Analyzing the cost of market data distribution in isolation from the cost of all of the inputs supporting the creation of market data will inevitably underestimate the cost of the data. Thus, because it is impossible to create data without a fast, technologically robust, and well-regulated execution system, system costs and regulatory costs affect the price of market data. It would be equally misleading, however, to attribute all of the exchange's costs to the market data portion of an exchange's joint product. Rather, all of the exchange's costs are incurred for the unified purposes of attracting order flow, executing and/or routing orders, and generating and selling data about market activity. The total return that an exchange earns reflects the revenues it receives from the joint products and the total costs of the joint products.

Competition among trading platforms can be expected to constrain the aggregate return each platform earns from the sale of its joint products, but different platforms may choose from a range of possible, and equally reasonable, pricing strategies as the means of recovering total costs. For example, some platforms may choose to pay rebates to attract orders, charge relatively low prices for market information (or provide information free of charge) and charge relatively high prices for accessing posted liquidity. Other platforms may choose a strategy of paying lower rebates (or no rebates) to attract orders, setting relatively high prices for market information, and setting relatively low prices for accessing posted liquidity. In this environment, there is no economic basis for regulating maximum prices for one of the joint products in an industry in which suppliers face competitive constraints with regard to the joint offering. This would be akin to strictly regulating the price that an automobile manufacturer can charge for car sound systems despite the existence of a highly competitive market for cars and the availability of aftermarket alternatives to the manufacturer-supplied system.

The market for market data products is competitive and inherently contestable because there is fierce competition for the inputs necessary to the creation of proprietary data and strict pricing discipline for the proprietary products themselves. Numerous exchanges compete with each other for listings, trades, and market data itself, providing virtually limitless opportunities for entrepreneurs who wish to produce and distribute their own market data. This proprietary data is produced by each individual exchange, as well as other entities, in a vigorously competitive market. Broker-dealers currently have numerous alternative venues for their order flow, including ten self-regulatory organization (''SRO'') markets, as well as internalizing broker-dealers (''BDs'') and various forms of alternative trading systems (''ATSs''), including dark pools and electronic communication networks (''ECNs''). Each SRO market competes to produce transaction reports via trade executions, and two FINRA regulated Trade Reporting Facilities (''TRFs'') compete to attract internalized transaction reports. Competitive markets for order flow, executions, and transaction reports provide pricing discipline for the inputs of proprietary data products. For example, the Exchange notes that at least two other U.S. options exchanges offer a market data product that is substantially similar to NOTO, which NASDAQ must consider in its pricing discipline in order to compete for listings, trades, and the market data itself.[12]

The large number of SROs, TRFs, BDs, and ATSs that currently produce proprietary data or are currently capable of producing it provides further pricing discipline for proprietary data products. Each SRO, TRF, ATS, and BD is currently permitted to produce proprietary data products, and many currently do or have announced plans to do so, including, NASDAQ, PHLX, NYSE, NYSE Amex, NYSEArca, and BATS.

Any ATS or BD can combine with any other ATS, BD, or multiple ATSs or BDs to produce joint proprietary data products. Additionally, order routers and market data vendors can facilitate single or multiple broker-dealers' production of proprietary data products. The potential sources of proprietary products are virtually limitless.

The fact that proprietary data from ATSs, BDs, and vendors can by-pass SROs is significant in two respects. First, non-SROs can compete directly with SROs for the production and sale of proprietary data products, as BATS and Arca did before registering as exchanges by publishing proprietary book data on the Internet. Second, because a single order or transaction report can appear in an SRO proprietary product, a non-SRO proprietary product, or both, the data available in proprietary products is exponentially greater than the actual number of orders and transaction reports that exist in the marketplace.

Market data vendors provide another form of price discipline for proprietary data products because they control the primary means of access to end users. Vendors impose price restraints based upon their business models. For example, vendors such as Bloomberg and Reuters that assess a surcharge on data they sell may refuse to offer proprietary products that end users will not purchase in sufficient numbers. Internet portals, such as Yahoo, impose a discipline by providing only data that will enable them to attract ''eyeballs'' that contribute to their advertising revenue. Retail broker-dealers, such as

[11] *NetCoalition* at 24.

[12] The International Securities Exchange, Inc. (''ISE'') Open/Close Trade Profile and the ISE Open/Close Trade Profile Intra-Day contain substantially similar data to that included in NOTO End of Day and NOTO Intra-Day. *See* Securities Exchange Act Release No. 56254 (August 15, 2007), 72 FR 47104 (August 22, 2007) (SR–ISE–2007–70). The Chicago Board Options Exchange, Inc. (''CBOE'') also offers similar market data. *See* Securities Exchange Act Release No. 55062 (January 8, 2007), 72 FR 2048 (January 17, 2007) (SR–CBOE–2006–88) (order granting approval to proposed rule change to codify a fee schedule for the sale of open and close volume data on CBOE listed options by Market Data Express, LLC).

Schwab and Fidelity, offer their customers proprietary data only if it promotes trading and generates sufficient commission revenue. Although the business models may differ, these vendors' pricing discipline is the same: they can simply refuse to purchase any proprietary data product that fails to provide sufficient value. NASDAQ and other producers of proprietary data products must understand and respond to these varying business models and pricing disciplines in order to market proprietary data products successfully.

In addition to the competition and price discipline described above, the market for proprietary data products is also highly contestable because market entry is rapid, inexpensive, and profitable. The history of electronic trading is replete with examples of entrants that swiftly grew into some of the largest electronic trading platforms and proprietary data producers: Archipelago, Bloomberg Tradebook, Island, RediBook, Attain, TracECN, BATS Trading and Direct Edge. A proliferation of dark pools and other ATSs operate profitably with fragmentary shares of consolidated market volume.

Regulation NMS, by deregulating the market for proprietary data, has increased the contestability of that market. While broker-dealers have previously published their proprietary data individually, Regulation NMS encourages market data vendors and broker-dealers to produce proprietary products cooperatively in a manner never before possible. Multiple market data vendors already have the capability to aggregate data and disseminate it on a profitable scale, including Bloomberg, and Thomson-Reuters.

The court in NetCoalition concluded that the Commission had failed to demonstrate that the market for market data was competitive based on the reasoning of the Commission's NetCoalition order because, in the court's view, the Commission had not adequately demonstrated that the depth-of-book data at issue in the case is used to attract order flow. NASDAQ believes, however, that evidence not before the court clearly demonstrates that availability of depth data attracts order flow.

Competition among platforms has driven NASDAQ continually to improve its platform data offerings and to cater to customers' data needs.

For the foregoing reasons, NASDAQ does not believe that the proposed rule change will result in any burden on competition that is not necessary or appropriate in furtherance of the purpose of the Act.

C. Self-Regulatory Organization's Statement on Comments on the Proposed Rule Change Received From Members, Participants, or Others

No written comments were either solicited or received.

III. Date of Effectiveness of the Proposed Rule Change and Timing for Commission Action

The foregoing rule change has become effective pursuant to Section 19(b)(3)(A)(ii) of the Act.[13] At any time within 60 days of the filing of the proposed rule change, the Commission summarily may temporarily suspend such rule change if it appears to the Commission that such action is necessary or appropriate in the public interest, for the protection of investors, or otherwise in furtherance of the purposes of the Act.

IV. Solicitation of Comments

Interested persons are invited to submit written data, views, and arguments concerning the foregoing, including whether the proposed rule change is consistent with the Exchange Act. Comments may be submitted by any of the following methods:

Electronic Comments

- Use the Commission's Internet comment form (*http://www.sec.gov/rules/sro.shtml*); or
- Send an email to *rule-comments@sec.gov.* Please include File Number SR–NASDAQ–2011–153 on the subject line.

Paper Comments

- Send paper comments in triplicate to Elizabeth M. Murphy, Secretary, Securities and Exchange Commission, 100 F Street NE., Washington, DC 20549–1090.

All submissions should refer to File Number SR–NASDAQ–2011–153. This file number should be included on the subject line if email is used. To help the Commission process and review your comments more efficiently, please use only one method. The Commission will post all comments on the Commission's Internet Web site (*http://www.sec.gov/rules/sro.shtml*). Copies of the submission, all subsequent amendments, all written statements with respect to the proposed rule change that are filed with the Commission, and all written communications relating to the proposed rule change between the Commission and any person, other than those that may be withheld from the public in accordance with the provisions of 5 U.S.C. 552, will be available for Web site viewing and printing in the Commission's Public Reference Room, 100 F Street NE., Washington, DC 20549, on official business days between the hours of 10 a.m. and 3 p.m. Copies of the filing also will be available for inspection and copying at the principal office of the Exchange. All comments received will be posted without change; the Commission does not edit personal identifying information from submissions. You should submit only information that you wish to make available publicly. All submissions should refer to File Number SR–NASDAQ–2011–153 and should be submitted on or before December 23, 2011.

For the Commission, by the Division of Trading and Markets, pursuant to delegated authority.[14]

Kevin M. O'Neill,

Deputy Secretary.

[FR Doc. 2011–30989 Filed 12–1–11; 8:45 am]

BILLING CODE 8011–01–P

[13] 15 U.S.C. 78s(b)(3)(A)(ii).

[14] 17 CFR 200.30–3(a)(12).

SMALL BUSINESS ADMINISTRATION

[Disaster Declaration #12936 and #12937]

North Carolina Disaster #NC–00038

AGENCY: U.S. Small Business Administration.

ACTION: Notice.

SUMMARY: This is a notice of an Administrative declaration of a disaster for the State of North Carolina dated 11/21/2011.

Incident: Storms and tornadoes.

Incident Period: 11/16/2011.

Effective Date: 11/21/2011.

Physical Loan Application Deadline Date: 01/20/2012.

Economic Injury (EIDL) Loan Application Deadline Date: 08/21/2012.

ADDRESSES: Submit completed loan applications to: U.S. Small Business Administration, Processing and Disbursement Center, 14925 Kingsport Road, Fort Worth, TX 76155.

FOR FURTHER INFORMATION CONTACT: A. Escobar, Office of Disaster Assistance, U.S. Small Business Administration, 409 3rd Street SW., Suite 6050, Washington, DC 20416.

SUPPLEMENTARY INFORMATION: Notice is hereby given that as a result of the Administrator's disaster declaration,

applications for disaster loans may be filed at the address listed above or other locally announced locations. The following areas have been determined to be adversely affected by the disaster:

Primary Counties: Davidson.

Contiguous Counties:

North Carolina: Davie, Forsyth, Guilford, Montgomery, Randolph, Rowan, Stanly.

The Interest Rates are:

	Percent
For Physical Damage:	
Homeowners With Credit Available Elsewhere	4.125
Homeowners Without Credit Available Elsewhere	2.063
Businesses With Credit Available Elsewhere	6.000
Businesses Without Credit Available Elsewhere	4.000
Non-Profit Organizations With Credit Available Elsewhere	3.125
Non-Profit Organizations Without Credit Available Elsewhere	3.000
For Economic Injury:	
Businesses & Small Agricultural Cooperatives Without Credit Available Elsewhere	4.000
Non-Profit Organizations Without Credit Available Elsewhere	3.000

The number assigned to this disaster for physical damage is 12936 C and for economic injury is 12937 0.

The State which received an EIDL Declaration # are North Carolina.

(Catalog of Federal Domestic Assistance Numbers 59002 and 59008)

Dated: November 21, 2011.

Karen G. Mills,

Administrator.

[FR Doc. 2011–30932 Filed 12–1–11; 8:45 am]

BILLING CODE 8025–01–M

SMALL BUSINESS ADMINISTRATION

Disaster Declaration #12738 and #12739; Nebraska Disaster Number NE–00041

AGENCY: U.S. Small Business Administration.

ACTION: Amendment 2.

SUMMARY: This is an amendment of the Presidential declaration of a major disaster for the State of Nebraska (FEMA–4013–DR), dated 08/12/2011.

Incident: Flooding.

Incident Period: 05/24/2011 through 08/01/2011.

Effective Date: 11/18/2011.

Physical Loan Application Deadline Date: 10/11/2011.

EIDL Loan Application Deadline Date: 05/14/2012.

ADDRESSES: Submit completed loan applications to: U.S. Small Business Administration, Processing and Disbursement Center, 14925 Kingsport Road, Fort Worth, TX 76155.

FOR FURTHER INFORMATION CONTACT: A. Escobar, Office of Disaster Assistance, U.S. Small Business Administration, 409 3rd Street, SW., Suite 6050, Washington, DC 20416.

SUPPLEMENTARY INFORMATION: The notice of the Presidential disaster declaration for the State of NEBRASKA, dated 08/12/2011 is hereby amended to include the following areas as adversely affected by the disaster:

Primary Counties: (Physical Damage and Economic Injury Loans) Thurston, including the Omaha Tribe of Nebraska and Iowa

Contiguous Counties: (Economic Injury Loans Only) All other information in the original declaration remains unchanged.

(Catalog of Federal Domestic Assistance Numbers 59002 and 59008)

Joseph P. Loddo,

Acting Associate Administrator, for Disaster Assistance.

[FR Doc. 2011–30937 Filed 12–1–11; 8:45 am]

BILLING CODE 8025–01–M

DEPARTMENT OF STATE

[Public Notice: 7705]

60-Day Notice of Proposed Information Collection: DS–86, Statement of Non-Receipt of a Passport, 1405–0146

ACTION: Notice of request for public comments.

SUMMARY: The Department of State is seeking Office of Management and Budget (OMB) approval for the information collection described below. The purpose of this notice is to allow 60 days for public comment in the **Federal Register** preceding submission to OMB. We are conducting this process in accordance with the Paperwork Reduction Act of 1995.

- *Title of Information Collection:* Statement of Non-Receipt of a Passport.
- *OMB Control Number:* 1405–0146.
- *Type of Request:* Extension of a Currently Approved Collection.
- *Originating Office:* Bureau of Consular Affairs, CA/PPT/PMO/PC.
- *Form Number:* DS–86.
- *Respondents:* Individuals who have not received the passport for which they originally applied.
- *Estimated Number of Respondents:* 12,755 per year.
- *Estimated Number of Responses:* 12,755 per year.
- *Average Hours per Response:* 5 min.
- *Total Estimated Burden:* 1,063 hours.
- *Frequency:* On Occasion.
- *Obligation to Respond:* Required to Obtain a Benefit.

DATES: The Department will accept comments from the public up to 60 days from December 2, 2011.

ADDRESSES: You may submit comments by any of the following methods:

- *Email: PPTFormsOfficer@state.gov*
- *Mail (paper, disk, or CD–ROM submissions):* Passport Services, Passport Forms Management and Officer, U.S. Department of State, Office of Program Management and Operational Support, 2201 C Street NW., Washington, DC 20520.

You must include the DS form number (if applicable), information collection title, and OMB control number in any correspondence.

FOR FURTHER INFORMATION CONTACT: Direct requests for additional information regarding the collection listed in this notice, including requests for copies of the proposed information collection and supporting documents, to Passport Services, Passport Forms Management and Officer, U.S. Department of State, Office of Program Management and Operational Support, 2201 C Street NW., Washington, DC 20520, who may be reached on (202) 663–2457 or at *PPTFormsOfficer@state.gov.*

SUPPLEMENTARY INFORMATION: We are soliciting public comments to permit the Department to:

- Evaluate whether the proposed information collection is necessary for the proper performance of our functions.
- Evaluate the accuracy of our estimate of the burden of the proposed collection, including the validity of the methodology and assumptions used.
- Enhance the quality, utility, and clarity of the information to be collected.
- Minimize the reporting burden on those who are to respond, including the use of automated collection techniques or other forms of technology.

Abstract of Proposed Collection

This statement of non-receipt is used by the U.S. Department of State to collect information for the purpose of issuing a replacement passport to customers who have not received the passport for which they originally applied.

Methodology

Passport applicants who do not receive their passports are required to complete a Statement of Non-Receipt of a Passport, Form DS–86. Passport applicants can either download the form from the Internet or pick one up from an Acceptance Facility/Passport Agency. The form must be completed, signed, and then submitted to the Acceptance Facility/Passport Agency for passport re-issuance.

Dated: November 15, 2011.

Barry J. Conway,

Acting Deputy Assistant Secretary for Passport Services, Bureau of Consular Affairs, Department of State.

[FR Doc. 2011–31063 Filed 12–1–11; 8:45 am]

BILLING CODE 4710–05–P

DEPARTMENT OF STATE

[Public Notice: 7704]

60-Day Notice of Proposed Information Collection: DS–71, Affidavit of Identifying Witness, 1405–0088

ACTION: Notice of request for public comments.

SUMMARY: The Department of State is seeking Office of Management and Budget (OMB) approval for the information collection described below. The purpose of this notice is to allow 60 days for public comment in the **Federal Register** preceding submission to OMB. We are conducting this process in accordance with the Paperwork Reduction Act of 1995.

- *Title of Information Collection:* Affidavit of Identifying Witness.
- *OMB Control Number:* 1405–0088.
- *Type of Request:* Revision of a Currently Approved Collection.
- *Originating Office:* Bureau of Consular Affairs, CA/PPT/PMO/PC.
- *Form Number:* DS–71.
- *Respondents:* Individuals who are verifying identity of a passport applicant.
- *Estimated Number of Respondents:* 44,000 per year.
- *Estimated Number of Responses:* 44,000 per year.
- *Average Hours Per Response:* 5 min.
- *Total Estimated Burden:* 3667 hours.
- *Frequency:* On Occasion.
- *Obligation to Respond:* Required to Obtain a Benefit.

DATES: The Department will accept comments from the public up to 60 days from December 2, 2011.

ADDRESSES: You may submit comments by any of the following methods:

- *Email: PPTFormsOfficer@state.gov.*
- *Mail (paper, disk, or CD–ROM submissions):* Passport Forms Management Officer, U.S. Department of State, Office of Program Management and Operational Support, 2100 Pennsylvania Avenue NW., Room 3031, Washington, DC 20037.

You must include the DS form number (if applicable), information collection title, and OMB control number in any correspondence.

FOR FURTHER INFORMATION CONTACT: Direct requests for additional information regarding the collection listed in this notice, including requests for copies of the proposed information collection and supporting documents, to Passport Forms Management and Officer, U.S. Department of State, Office of Program Management and Operational Support, 2100 Pennsylvania Avenue NW., Room 3031, Washington, DC 20037, who may be reached on (202) 663–2457 or at *PPTFormsOfficer@state.gov.*

SUPPLEMENTARY INFORMATION: We are soliciting public comments to permit the Department to:

- Evaluate whether the proposed information collection is necessary for the proper performance of our functions.
- Evaluate the accuracy of our estimate of the burden of the proposed collection, including the validity of the methodology and assumptions used.
- Enhance the quality, utility, and clarity of the information to be collected.
- Minimize the reporting burden on those who are to respond, including the use of automated collection techniques or other forms of technology.

Abstract of Proposed Collection

The Affidavit of Identifying Witness is submitted in conjunction with an application for a U.S. passport. It is used by Passport Services to collect information for the purpose of establishing the identity of the applicant. This application is completed by the identifying witness when the applicant is unable to establish his or her identity to the satisfaction of a person authorized to accept passport applications.

Methodology

The Affidavit of Identifying Witness is submitted in conjunction with an application for a U.S. passport. Due to legislative mandates Form DS–0071 is only available at acceptance facilities and passport agencies. This form must be completed and signed in the presence of an authorized Passport Agent, Acceptance Agent, or Consular Officer.

Dated: November 15, 2011.

Barry J. Conway,

Acting Deputy Assistant Secretary for Passport Services, Bureau of Consular Affairs, Department of State.

[FR Doc. 2011–31065 Filed 12–1–11; 8:45 am]

BILLING CODE 4710–06–P

DEPARTMENT OF STATE

[Public Notice: 7659]

Advisory Committee on International Economic Policy; Notice of Meeting Cancellation

The meeting of the Advisory Committee on International Economic Policy (Public Notice 7654) scheduled for 2 to 4 p.m. on Thursday, December 8, 2011, to examine A New Focus on Investment: Attracting Inbound Foreign Direct Investment to the U.S. and highlight the U.S.-Turkey Economic Partnership Commission has been cancelled.

For additional information, contact Deputy Outreach Coordinator Tiffany Enoch, Office of Economic Policy Analysis and Public Diplomacy, Bureau of Economic, and Business Affairs, at (202) 647–2231 or *EnochT@state.gov.*

Dated: November 28, 2011.

Maryruth Coleman,

Office Director, Office of Economic Policy Analysis and Public Diplomacy, U.S. Department of State.

[FR Doc. 2011–31066 Filed 12–1–11; 8:45 am]

BILLING CODE 4710–07–P

DEPARTMENT OF TRANSPORTATION

National Highway Traffic Safety Administration

[Docket No. NHTSA–2010–0151; Notice 2]

General Motors LLC, Grant of Petition for Decision of Inconsequential Noncompliance

AGENCY: National Highway Traffic Safety Administration, DOT.

ACTION: Notice of petition grant.

SUMMARY: General Motors LLC (GM),[1] has determined that approximately 1,113 Model Year (MY) 2011 Buick Regal passenger cars do not fully comply with paragraph S4.3(d) of 49 CFR 571.110, Federal Motor Vehicle Safety Standard (FMVSS) No. 110, *Tire selection and rims and motor home/recreation vehicle trailer load carrying capacity information for motor vehicles*

[1] General Motors LLC (GM) is vehicle manufacturer incorporated under the laws of the state of Michigan.

with a GVWR of 4,536 kilograms (10,000 pounds) or less. GM filed an appropriate report pursuant to 49 CFR part 573, *Defect and Noncompliance Responsibility and Reports* dated July 26, 2010.

Pursuant to 49 U.S.C. 30118(d) and 30120(h) and the rule implementing those provisions at 49 CFR Part 556, GM has petitioned for an exemption from the notification and remedy requirements of 49 U.S.C. chapter 301 on the basis that this noncompliance is inconsequential to motor vehicle safety. Notice of receipt of the petition was published, with a 30-day public comment period, on November 19, 2010 in the **Federal Register** (75 FR 70963). No comments were received. To view the petition and all supporting documents log onto the Federal Docket Management System (FDMS) Web site at: *http://www.regulations.gov/.* Then follow the online search instructions to locate docket number ''NHTSA–2010–0151.''

For further information on this decision, contact Mr. John Finneran, Office of Vehicle Safety Compliance, the National Highway Traffic Safety Administration (NHTSA), telephone (202) 366–0645, facsimile (202) 366-5930.

GM estimates that approximately 1,113 model year 2011 Buick Regal passenger cars manufactured between January 20, 2010, and May 18, 2010, at GM's Rüsselsheim assembly plant are affected.

GM explains that the noncompliance with FMVSS No. 110 is the omission of the letter ''T'' in the spare tire size printed on the tire and loading information labels that it affixed to the vehicles. Currently the tire size designation shows the spare tire size as ''125/80R16'' instead of ''T125/80R16.''

GM additionally stated that it believes that this noncompliance is inconsequential to motor vehicle safety for the following reasons:

(1) All information for maintaining and/or replacing the front and rear tires, as well as the seating capacity and vehicle capacity weight are correct on tire and loading information labels on the subject vehicles.

(2) The vehicles are equipped with spare tires that have the complete tire size (T125/80R16) molded into their sidewalls.

(3) When a customer needs to replace the spare tire, he/she will take the vehicle to a tire store. The tire store will know what compact spare tire is needed based on the information in their catalog or by looking at the spare tire provided with the vehicle. If they rely on spare tire size printed on the tire and loading information label, they will find the spare tire size ''125/80R16'' without the letter T. This should not cause confusion or error because the only tire available with the size designation of ''125/80R16'' is the compact spare tire ''T125/80R16.''

(4) Risk to the public is negligible because the vehicles are equipped with the correct spare tire, and the tire and loading information label does have the correct inflation pressure for the compact spare tire.

(5) GM is not aware of any incidents or injuries related to the subject condition.

GM has additionally informed NHTSA that it has corrected the noncompliance so that all future production vehicles will have compliant labels.

Supported by the above stated reasons, GM believes that the subject noncompliance is inconsequential to motor vehicle safety, and that its petition, to exempt it from providing recall notification of noncompliance as required by 49 U.S.C. 30118 and remedying the recall noncompliance as required by 49 U.S.C. 30120, should be granted.

NHTSA Decision: The intent of FMVSS No. 110 is to ensure that vehicles are equipped with tires appropriate to handle maximum vehicle loads and prevent overloading. NHTSA has confirmed that: The installed and labeled tires, including the spare, when inflated to the labeled recommended cold inflation pressure are appropriate to handle the vehicle maximum loads; the tire and loading information labels on subject vehicles are correct, except for the subject noncompliance; the vehicles are equipped with spare tires that have the complete tire size (T125/80R16) molded into their sidewalls; and the only tire available with the size designation of ''125/80R16'' is the compact spare tire ''T125/80R16''. Consequently, the subject noncompliance should not cause any unsafe conditions associated with determination of the correct tire inflation pressures or replacement tire selection for the subject vehicles.

Therefore, NHTSA agrees with GM that the omission of the letter ''T'' in the spare tire size printed on the tire and loading information labels that it affixed to the vehicles does not have any adverse safety implications.

NHTSA is also not aware of any customer complaints or field reports relating to this issue and GM has stated that it has corrected the problem that caused these errors so that they will not be repeated in future production.

The National Highway Traffic Safety Administration (NHTSA) notes that the statutory provisions (49 U.S.C. 30118(d) and 30120(h)) that permit manufacturers to file petitions for a determination of inconsequentiality allow NHTSA to exempt manufacturers only from the duties found in sections 30118 and 30120, respectively, to notify owners, purchasers, and dealers of a defect or noncompliance and to remedy the defect or noncompliance. Therefore, these provisions only apply to the 1,113 [2] vehicles that have already passed from the manufacturer to an owner, purchaser, or dealer.

In consideration of the foregoing, NHTSA has decided that GM has met its burden of persuasion that the subject FMVSS No. 110 labeling noncompliance is inconsequential to motor vehicle safety. Accordingly, GM's petition is granted and the petitioner is exempted from the obligation of providing notification of, and a remedy for, the subject noncompliance under 49 U.S.C. 30118 and 30120.

Authority: 49 U.S.C. 30118, 30120: delegations of authority at CFR 1.50 and 501.8.

Issued on: November 22, 2011.

Claude H. Harris,

Director, Office of Vehicle Safety Compliance.

[FR Doc. 2011–31002 Filed 12–1–11; 8:45 am]

BILLING CODE 4910–59–P

[2] GM's petition, which was filed under 49 CFR part 556, requests an agency decision to exempt GM as a manufacturer from the notification and recall responsibilities of 49 CFR part 573 for the affected vehicles. However, a decision on this petition cannot relieve distributors and dealers of the prohibitions on the sale, offer for sale, or introduction or delivery for introduction into interstate commerce of the noncompliant vehicles under their control after GM notified them that the subject noncompliance existed.

DEPARTMENT OF TRANSPORTATION

Surface Transportation Board

[Docket No. FD 35570]

Port Rail Link, Inc.—Acquisition and Operation Exemption—Rail Lines of Union Pacific Railroad Company and The Lake Charles Harbor and Terminal District

Port Rail Link, Inc. (PRL), a noncarrier, has filed a verified notice of exemption under 49 CFR 1150.31 to: (1) Acquire by lease from Union Pacific Railroad Company (UP) and operate a 2.3-mile rail line between mileposts 9.45 and 7.15, at or near Harbor Yard at Lake Charles; and (2) acquire by lease from The Lake Charles Harbor and Terminal District (the District), operator

of the Port of Lake Charles (the Port), and operate a 2.8-mile rail line between mileposts 0.0 and 2.8 at or near the City Docks of the Port, a total distance of 5.1 miles in Calcasieu Parish, La.[1]

PRL states that it will interchange manifest traffic with UP at Harbor Yard and interchange unit trains with UP at New Yard, located adjacent to UP's industrial lead track.

The transaction may not be consummated until December 17, 2011 (30 days after the notice of exemption was filed).

PRL certifies that its projected annual revenues as a result of this transaction will not result in its becoming a Class II or Class I rail carrier and will not exceed $5 million.

If the verified notice contains false or misleading information, the exemption is void *ab initio.* Petitions to revoke the exemption under 49 U.S.C. 10502(d) may be filed at any time. The filing of a petition to revoke will not automatically stay the effectiveness of the exemption. Petitions to stay must be filed no later than December 9, 2011 (at least 7 days before the exemption becomes effective).

An original and 10 copies of all pleadings, referring to Docket No. FD 35570, must be filed with the Surface Transportation Board, 395 E Street, SW., Washington, DC 20423–0001. In addition, a copy of each pleading must be served on Thomas F. McFarland, 208 South LaSalle St., Suite 1890, Chicago, IL 60604.

Board decisions and notices are available on our Web site at *http://www.stb.dot.gov.*

Decided: November 25, 2011.

By the Board.

Joseph H. Dettmar,

Acting Director, Office of Proceedings.

Raina S. White,

Clearance Clerk.

[FR Doc. 2011–30900 Filed 12–1–11; 8:45 am]

BILLING CODE 4915–01–P

[1] UP and the District use different milepost designations. The 2.3-mile segment is identified by UP milepost numbers and the 2.8-mile segment is identified by District milepost numbers. The line segments connect at UP milepost 9.45, which is District milepost 2.8.

DEPARTMENT OF TRANSPORTATION

Surface Transportation Board

[Docket No. FD 35561]

Lake State Railway Company—Intra-Corporate Family Merger Exemption—Saginaw Bay Southern Railway Company

Lake State Railway Company (LSRC) and Saginaw Bay Southern Railway Company (SBS), both Class III rail carriers, have jointly filed a verified notice of exemption under 49 CFR 1180.2(d)(3) for an intra-corporate family transaction.

Applicants state that both rail carriers operate within the state of Michigan. LSRC owns or operates approximately 225 miles of rail line extending from (a) Bay City to Gaylord, (b) Pinconning (on the Bay City-Gaylord line) to Alpena, and (c) Alabaster Junction (near Tawas City on the Pinconning-Alpena line) to Alabaster. SBS owns or operates over approximately 74 miles of rail line extending primarily between (a) a point of connection with CSX Transportation, Inc. (CSXT) at Mt. Morris and Saginaw, and (b) Saginaw and Midland, Bay City/Essexville and Paines. LSRC and SBS lines connect at Bay City. Applicants note that SBS provides service over its lines through use of LSRC as a contract operator, and LSRC, therefore, already conducts all rail operations on the LSRC/SBS system. Applicants are commonly controlled by J&JG Holding Company, Inc., a noncarrier.[1]

Pursuant to an agreement and plan of merger by the applicants, SBS will merge with and into LSRC, with LSRC being the surviving corporation. According to applicants, the consolidated entity will continue all existing operations of LSRC and SBS.

Applicants point out that, for railway accounting purposes, LSRC functions today as an Interline Settlement System (ISS) carrier, while SBS functions as a Junction Settlement (JS) carrier through CSXT. Applicants state that after the merger of LSRC and SBS, the former SBS lines will be converted to the ISS status,[2] but for administrative and logistical reasons, that change is not expected to occur until on or after March 1, 2012, two months after the formal merger is consummated. During the interim period, LSRC will operate the former SBS lines as ''doing business as'' Saginaw Bay Southern. CSXT supports the proposed transaction and the change from JS to ISS for accounting purposes.

The transaction is scheduled to be consummated on January 1, 2012.

The purpose of the transaction is to simplify the corporate structure and reduce overhead costs and duplication by combining the two separate rail carrier corporations.

This is a transaction within a corporate family of the type specifically exempted from prior review and approval under 49 CFR 1180.2(d)(3). The parties state that the transaction will not result in adverse changes in service levels, significant operational changes, or any change in the competitive balance with carriers outside the corporate family.

Under 49 U.S.C. 10502(g), the Board may not use its exemption authority to relieve a rail carrier of its statutory obligation to protect the interests of its employees. Section 11326(c), however, does not provide for labor protection for transactions under 11324 and 11325 that involve only Class III rail carriers. Accordingly, the Board may not impose labor protective conditions here, because all of the carriers involved are Class III rail carriers.

If the notice contains false or misleading information, the exemption is void *ab initio.* Petitions to revoke the exemption under 49 U.S.C. 10502(d) may be filed at any time. The filing of a petition to revoke will not automatically stay the effectiveness of the exemption. Petitions for stay must be filed no later than December 9, 2011 (at least 7 days before the exemption becomes effective).

An original and 10 copies of all pleadings, referring to Docket No. FD 35561, must be filed with the Surface Transportation Board, 395 E Street SW., Washington, DC 20423–0001. In addition one copy of each pleading must be served on Thomas J. Litwiler, Fletcher & Sippel LLC, 29 North Wacker Drive, Suite 920, Chicago, IL 60606.

Board decisions and notices are available on our Web site at *http://www.stb.dot.gov.*

Decided: November 22, 2011.

By the Board.

Joseph H. Dettmar,

Acting Director, Office of Proceedings.

Raina S. White,

Clearance Clerk.

[FR Doc. 2011–30790 Filed 12–1–11; 8:45 am]

BILLING CODE 4915–01–P

[1] *James George and J&JG Holding Co.—Continuance in Control Exemption—Saginaw Bay S. Ry.,* FD 34730 (STB served Oct. 17, 2005).

[2] The Railway Accounting Rules of the Association of American Railroads do not permit a railroad to be both an ISS carrier and a JS carrier.

DEPARTMENT OF TRANSPORTATION

Surface Transportation Board

[Docket No. FD 35567]

Hilton & Albany Railroad, Inc.—Lease and Operation Exemption—Norfolk Southern Railway Company

Hilton & Albany Railroad, Inc. (HAL), a noncarrier, has filed a verified notice of exemption under 49 CFR 1150.31 to lease from Norfolk Southern Railway Company (NSR) and operate approximately 55.5 miles of railroad extending between milepost J 302.3 near Albany West, Ga., and milepost J 357.8 near Hilton, Ga. (the line). This transaction is related to a concurrently filed petition for exemption in Docket No. FD 35568, *Genesee & Wyoming Inc.—Continuance in Control Exemption—Hilton & Albany Railroad, Inc.,* in which Genesee & Wyoming Inc. (GWI), a noncarrier, seeks Board approval to continue in control of HAL upon HAL's becoming a Class III carrier.

As a result of this transaction, and pursuant to a lease agreement dated October 28, 2011, HAL will provide freight rail service over the line, connecting with and interchanging traffic with NSR at Albany Yard. The line will be a connecting line between NSR in Albany and 4 short lines controlled by GWI: HAL will connect directly with the Chattahoochee Bay Railroad (CHAT), Chattahoochee Industrial Railroad, and the Georgia Southwestern Railroad, and indirectly with the Bay Line Railroad via CHAT.

HAL states that it plans to commence operations on January 1, 2012, more than 30 days after the filing of the notice of exemption. The earliest this transaction may be consummated is December 18, 2011, the effective date of the exemption (30 days after the exemption was filed).

HAL certifies that its projected revenues as a result of the transaction will not exceed those that would qualify it as a Class III carrier and that such revenues will not exceed $5 million annually.

If the verified notice contains false or misleading information, the exemption is void *ab initio*. Petitions to revoke the exemption under 49 U.S.C. 10502(d) may be filed at any time. The filing of a petition to revoke will not automatically stay the effectiveness of the exemption. Petitions for stay must be filed no later than December 9, 2011 (at least 7 days before the exemption becomes effective).

An original and 10 copies of all pleadings, referring to Docket No. FD 35567, must be filed with the Surface Transportation Board, 395 E Street SW., Washington, DC 20423–0001. In addition, a copy of each pleading must be served on Eric M. Hocky, Thorp Reed & Armstrong, LLP, One Commerce Square, 2005 Market Street, Suite 1000, Philadelphia, PA 19103.

Board decisions and notices are available on our Web site at *http://www.stb.dot.gov.*

Decided: November 25, 2011.

By the Board.

Joseph H. Dettmar,

Acting Director, Office of Proceedings.

Raina S. White,

Clerance Clerk.

[FR Doc. 2011–30899 Filed 12–1–11; 8:45 am]

BILLING CODE 4915–01–P

FEDERAL REGISTER

Vol. 76 Friday,

No. 232 December 2, 2011

Part II

Department of Education

34 CFR Part 99

Family Educational Rights and Privacy; Final Rule

DEPARTMENT OF EDUCATION

34 CFR Part 99

[DOCKET ID ED–2011–OM–0002]

RIN 1880–AA86

Family Educational Rights and Privacy

AGENCY: Office of Management, Department of Education.

ACTION: Final regulations.

SUMMARY: The Secretary of Education (Secretary) amends the regulations implementing section 444 of the General Education Provisions Act (GEPA), which is commonly referred to as the Family Educational Rights and Privacy Act (FERPA). These amendments are needed to ensure that the U.S. Department of Education (Department or we) continues to implement FERPA in a way that protects the privacy of education records while allowing for the effective use of data. Improved access to data will facilitate States' ability to evaluate education programs, to ensure limited resources are invested effectively, to build upon what works and discard what does not, to increase accountability and transparency, and to contribute to a culture of innovation and continuous improvement in education. The use of data is vital to ensuring the best education for our children. However, the benefits of using student data must always be balanced with the need to protect student privacy. Protecting student privacy helps achieve a number of important goals, including avoiding discrimination, identity theft, as well as other malicious and damaging criminal acts.

DATES: These regulations are effective January 3, 2012. However, State and local educational authorities, and Federal agencies headed by officials listed in § 99.31(a)(3) with written agreements in place prior to January 3, 2012, must comply with the existing requirement in § 99.35(a)(3) to use written agreements to designate any authorized representatives, other than employees, only upon any renewal of or amendment to the written agreement with such authorized representative.

FOR FURTHER INFORMATION CONTACT: Ellen Campbell, U.S. Department of Education, 400 Maryland Avenue SW., Room 2E203, Washington, DC 20202–8520. *Telephone:* (202) 260–3887.

If you use a telecommunications device for the deaf (TDD), call the Federal Relay Service (FRS), toll-free, at 1–(800) 877–8339.

SUPPLEMENTARY INFORMATION: On April 8, 2011, the Department published a notice of proposed rulemaking (NPRM) in the **Federal Register** (76 FR 19726). In the preamble to the NPRM, the Secretary stated that the proposed changes were necessary to ensure the Department's proper implementation of FERPA, while allowing for the effective use of student data, and to address other issues identified through the Department's experience in administering FERPA.

Protecting student privacy is paramount to the effective implementation of FERPA. All education data holders must act responsibly and be held accountable for safeguarding students' personally identifiable information (PII) from education records. The need for clarity surrounding privacy protections and data security continues to grow as statewide longitudinal data systems (SLDS) are built and more education records are digitized and shared electronically. As States develop and refine their information management systems, it is critical that they take steps to ensure that student information is protected and that PII from education records is disclosed only for authorized purposes and under circumstances permitted by law. (When we use the term ''disclose'' in this document, we sometimes are referring to redisclosures as well.)

The amendments reflected in these final regulations establish the procedures that State and local educational authorities, and Federal agencies headed by officials listed in § 99.31(a)(3) (FERPA-permitted entities), their authorized representatives, and organizations conducting studies must follow to ensure compliance with FERPA. The amendments also reduce barriers that have inhibited the effective use of SLDS as envisioned in the America Creating Opportunities to Meaningfully Promote Excellence in Technology, Education, and Science Act (the America COMPETES Act) (Pub. L. 110–69) and the American Recovery and Reinvestment Act of 2009 (ARRA) (Pub. L. 111–5). Finally, by expanding the requirements for written agreements and the Department's enforcement mechanisms, the amendments help to ensure increased accountability on the part of those with access to PII from education records.

These amendments include definitions for two previously undefined terms, ''authorized representative'' and ''education program,'' to permit greater access by appropriate and authorized parties to information on students in order to evaluate the effectiveness of education programs. Specifically, we have modified the definition of and requirements related to ''directory information'' to clarify (1) that the right to opt out of the disclosure of directory information under FERPA does not include the right to refuse to wear, or otherwise disclose, a student identification (ID) card or badge; (2) that schools may implement a limited directory information policy in which they specify the parties or purposes for which the information is disclosed; and (3) the Department's authority to hold State educational authorities and other recipients of Department funds under a program administered by the Secretary accountable for compliance with FERPA.

We believe that the regulatory changes adopted in these final regulations provide clarification on many important issues that have arisen over time with regard to how FERPA applies to SLDS and to other requests for data on student progress. Additionally, educational agencies and institutions continue to face considerable challenges implementing directory information policies that help them maintain safe campuses and protect PII from education records from potential misuse, such as identity theft. These final regulations, as well as the discussion in the preamble, will assist school officials in addressing these challenges in a manner that complies with FERPA. These final regulations also respond to the September 2010 U.S. Government Accountability Office (GAO) study entitled ''Many States Collect Graduates' Employment Information, but Clearer Guidance on Student Privacy Requirements Is Needed,'' by clarifying the means by which States can collect and share graduates' employment information under FERPA.

Finally, we have discussed with the U.S. Department of Agriculture (USDA) the potential effect of these regulations on the use of information regarding individual children's eligibility for free or reduced price school meals in the National School Lunch and School Breakfast Programs (School Meals Programs or SMPs) in connection with an audit or evaluation of Federal- or State-supported education programs. Congress recognized that sharing of children's eligibility information could benefit schools and children participating in the SMPs. As a result, section 9(b)(6) of the Richard B. Russell National School Lunch Act, as amended (National School Lunch Act) (42 U.S.C. 1758(b)(6)) permits schools to disclose children's eligibility information to persons with a need to know who are associated with a Federal or State education program and who will not

further disclose that information. Because of the importance of assuring not only that FERPA requirements are met, but also that all of the Federal confidentiality protections in the National School Lunch Act are met, the two Departments intend to jointly issue guidance in the near future for use by the educational community and by State and local administrators of USDA programs.

Notice of Proposed Rulemaking

In the NPRM, we proposed regulations to:

- Amend § 99.3 to define the term ''authorized representative'' to include individuals or entities designated by FERPA-permitted entities to carry out an audit or evaluation of Federal- or State-supported education programs, or for the enforcement of or compliance with Federal legal requirements related to these programs (audit, evaluation, or enforcement or compliance activity);
- Amend the definition of ''directory information'' in § 99.3 to clarify that a unique student identification (ID) number may be designated as directory information for the purposes of display on a student ID card or badge if the unique student ID number cannot be used to gain access to education records except when used in conjunction with one or more factors that authenticate the user's identity, such as a Personal Identification Number, password, or other factor known or possessed only by the authorized user;
- Amend § 99.3 to define the term ''education program'' as any program principally engaged in the provision of education, including, but not limited to, early childhood education, elementary and secondary education, postsecondary education, special education, job training, career and technical education, and adult education;
- Amend § 99.31(a)(6) to clarify that FERPA-permitted entities are not prevented from redisclosing PII from education records as part of agreements with researchers to conduct studies for, or on behalf of, educational agencies and institutions;
- Remove the provision in § 99.35(a)(2) that required that any FERPA-permitted entity must have legal authority under other Federal, State, or local law to conduct an audit, evaluation, or enforcement or compliance activity;
- Amend § 99.35(a)(2) to provide that FERPA-permitted entities are responsible for using reasonable methods to ensure that their authorized representatives comply with FERPA;
- Add a new § 99.35(a)(3) to require that FERPA-permitted entities must use a written agreement to designate an authorized representative (other than an employee) under the provisions in §§ 99.31(a)(3) and 99.35 that allow the authorized representative access to PII from education records without prior written consent in connection with any audit, evaluation, or enforcement or compliance activity;
- Add a new § 99.35(d) to clarify that in the event that the Department's Family Policy Compliance Office (FPCO or Office) finds an improper redisclosure in the context of §§ 99.31(a)(3) and 99.35 (the audit or evaluation exception), the Department would prohibit the educational agency or institution from which the PII originated from permitting the party responsible for the improper disclosure (*i.e.,* the authorized representative, or the FERPA-permitted entities, or both) access to PII from education records for a period of not less than five years (five-year rule);
- Amend § 99.37(c) to clarify that while parents or eligible students (students who have reached 18 years of age or are attending a postsecondary institution at any age) may opt out of the disclosure of directory information, this opt out does not prevent an educational agency or institution from requiring a student to wear, display, or disclose a student ID card or badge that exhibits directory information;
- Amend § 99.37(d) to clarify that educational agencies or institutions may develop policies that allow the disclosure of directory information only to specific parties, for specific purposes, or both; and
- Add § 99.60(a)(2) to authorize the Secretary to take appropriate actions to enforce FERPA against any entity that receives funds under any program administered by the Secretary, including funds provided by grant, cooperative agreement, contract, subgrant, or subcontract.

Changes From the NPRM

These final regulations contain the following substantive changes from the NPRM:

- In § 99.3, we have defined the term ''early education program'' as that term is used in the definition of education program. The definition is based on the definition of ''early childhood education program'' in section 103(8) of the Higher Education Act of 1965, as amended (HEA) (20 U.S.C. 1003(8));
- We have made changes to the definition of ''education program'' in § 99.3 to clarify that any program administered by an educational agency or institution is considered an education program; and
- We have modified the written agreement requirement in § 99.35(a)(3) to require that the agreement specify how the work falls within the exception of § 99.31(a)(3), including a description of the PII from education records that will be disclosed, and how the PII from education records will be used.

We have also made the following minor or non-substantive changes from the NPRM:

- We have made minor editorial changes to the definition of ''authorized representative'' in § 99.3 to ensure greater consistency between the language in that definition and the language in § 99.35(a)(1);
- We have removed language from §§ 99.31(a)(6)(iii)(C)(*4*) and 99.35(a)(3)(iii) and (a)(3)(iv) that permitted an organization conducting a study or an authorized representative to return PII from education records to the FERPA-permitted entity from which the PII originated, in lieu of destroying such information. We made these changes to more closely align the regulatory language with the statute and to ensure that the PII from education records is destroyed as required by the statute;
- We have made changes to § 99.35(a)(2) to clarify that the FERPA-permitted entity from which the PII originated is responsible for using reasonable methods to ensure *to the greatest extent practicable* that any entity or individual designated as its authorized representative complies with FERPA requirements;
- We have made editorial changes to § 99.35(a)(2) so the language in that section is more consistent with the language in § 99.35(a)(1) regarding the requirements for an audit, evaluation, or enforcement or compliance activity;
- We have clarified in § 99.35(a)(3)(v) that the required written agreement must establish policies and procedures to protect PII from education records from further disclosure, including by limiting use of PII to only authorized representatives with legitimate interests in the audit, evaluation, or enforcement or compliance activity;
- We have revised § 99.35(b)(1) to refer to a State or local educational authority or agency headed by an official listed in § 99.31(a)(3) rather than ''authority'' or ''agency'', to ensure consistency with the language used in § 99.35(a)(2) and (a)(3);
- We have consolidated all regulatory provisions related to prohibiting an educational agency or institution from disclosing PII from education records to a third party outside of an educational agency or institution for at least five years (five-year rule) and moved them to subpart E of part 99 (What are the

Enforcement Procedures?). Specifically, we—

○ Included in § 99.67(c) language from current § 99.31(a)(6)(iv) concerning the application of the five-year rule when the Department determines that a third party outside the educational agency or institution fails to destroy PII from education records after the information is no longer needed for the study for which it was disclosed;

○ Clarified in § 99.67(d) that, in the context of the audit or evaluation exception, the five-year rule applies to any FERPA-permitted entity or its authorized representative if the Department determines that either party improperly redisclosed PII from education records; and

○ Moved to § 99.67(e) the language from current § 99.33(e) concerning the application of the five-year rule when the Department determines that a third party outside the educational agency or institution improperly rediscloses PII from education records in violation of § 99.33 or fails to provide the notification required under § 99.33(b)(2);

• Throughout subpart E of part 99 (§§ 99.60 through 99.67), we have revised the language regarding enforcement procedures to clarify that the Secretary may investigate, process, and review complaints and violations of FERPA against an educational agency or institution or against any other recipient of Department funds under a program administered by the Secretary. This marks a change from the current provisions, which refer only to the Department's enforcement procedures against ''educational agencies and institutions,'' which are defined in § 99.3 as any public or private agency or institution to which part 99 applies under § 99.1(a). Section 99.1 describes FERPA as applying to an educational agency or institution to which funds have been made available under any program administered by the Secretary if (1) The educational institution provides educational services or instruction, or both, to students; or (2) the educational agency is authorized to direct and control public elementary or secondary, or postsecondary educational institutions; and

• Throughout subpart E of part 99 (§§ 99.60 through 99.67), we have clarified the procedures that the Office will follow to investigate, review, process, and enforce the five-year rule against third parties outside of the educational agency or institution.

Analysis of Comments and Changes

We received a total of 274 comments on the proposed regulations. The comments represented a broad spectrum of viewpoints from a number of different interested parties, including students, parents, privacy advocacy organizations, researchers, numerous associations, and representatives from schools, local educational agencies (LEAs) (also referred to as ''districts''), and State educational agencies (SEAs).

We have carefully considered these comments and, as a result of this public input, have made several changes to the final regulations since publication of the NPRM. An analysis of the comments and changes follows. We group major issues according to subject, with applicable sections of the regulations referenced in parentheses. Generally, we do not address technical and other minor changes that we made, or respond to suggested changes that the law does not authorize the Secretary to make, or to comments that were outside the scope of the NPRM.

General Comments

Definitions

Comment: Several commenters stated that the terms used in the proposed regulations to refer to the different types of entities affected by the regulations were unclear and asked for the Department to clarify their meaning. Specifically, they asked if there is a difference between an educational agency or institution, on the one hand, and a State or local educational authority, on the other. Some commenters requested that we clarify whether a State agency, other than an SEA, such as a State department of social services, could be considered a State educational authority under the regulations. Another commenter asked that we also define the term ''school official'' to differentiate it from the term ''authorized representative.''

Discussion: There are differences in meaning between the terms ''educational agency,'' ''educational institution,'' and ''State and local educational authority,'' and we provide the following explanation to clarify how these terms are used in the context of FERPA and its implementing regulations.

In general, FERPA applies to an ''educational agency or institution'' that receives funds under a program administered by the Secretary. 20 U.S.C. 1232g(a)(3). In § 99.3, we define the term ''educational agency or institution'' as any public or private agency or institution to which part 99 applies under § 99.1(a).

Educational institution. We use the term ''educational institution'' to refer to any elementary or secondary school, including any school funded or operated by the U.S. Department of the Interior's Bureau of Indian Education (BIE),[1] or to any postsecondary institution that receives funds under a program administered by the Secretary and that provides educational services or instruction, or both, to students (see § 99.1(a)(1)). Additionally, § 99.3 of the FERPA regulations defines ''institution of postsecondary education'' as an institution that provides education to students beyond the secondary school level. We generally use the term ''institution of postsecondary education'' to refer to colleges and universities and, in this document, use it interchangeably with the terms ''postsecondary institution'' and ''institution of higher education''.

Educational agency. Under § 99.1(a)(2), an ''educational agency'' is an entity that is authorized to direct and control public elementary or secondary schools or postsecondary institutions. Thus, we consider LEAs (a term that we use interchangeably with school districts) to be ''educational agencies'' in the context of FERPA. However, we do not generally view SEAs as being ''educational agencies'' under § 99.1(a)(2) because we interpret the statutory definition of the term ''student'' to mean that an educational agency is an agency attended by students. Under paragraph (a)(6) of FERPA, a ''student includes any person with respect to whom an educational agency or institution maintains education records or personally identifiable information, but does not include a person who has not been in attendance at such agency or institution.'' 20 U.S.C. 1232g(a)(6). For example, we have generally considered students to be in attendance at the Fairfax County Public Schools school district, but not at the Virginia Department of Education. Therefore, under this framework, the term ''educational agencies or institutions'' generally refers to LEAs, elementary and secondary schools, schools operated by BIE, and postsecondary institutions.

State and local educational authorities. The term ''State and local educational authority'' is not defined in FERPA. The term ''State and local

[1] Under section 9204(a) of the Elementary and Secondary Education Act of 1965, as amended (ESEA), the Secretary of Education and the Secretary of the Interior are required to reach an agreement regarding how the BIE will comply with ESEA requirements. Under a 2005 Final Agreement between the Department of Education and the Department of the Interior, the two Departments agreed, as a general matter, that the Department of Education would treat BIE as an SEA and each BIE school as an LEA, for purposes of complying with the requirements of ESEA.

educational authority'' is important in the context of FERPA's audit or evaluation exception in §§ 99.31(a)(3) and 99.35 because State and local educational authorities are permitted to access, without consent, PII from education records. We generally have interpreted the term ''State and local educational authority'' to refer to an SEA, a State postsecondary commission, BIE, or any other entity that is responsible for and authorized under local, State, or Federal law to supervise, plan, coordinate, advise, audit, or evaluate elementary, secondary, or postsecondary Federal- or State-supported education programs and services in the State. (See *http://www2.ed.gov/policy/gen/guid/fpco/ferpa/library/wku071105.html* for more information.) While we have not generally viewed an SEA as being an educational agency under § 99.1(a)(2) for the reasons outlined in the preceding paragraph, it is important to note that we do view an SEA as a State educational authority for FERPA purposes.

An LEA can be both an educational agency and a local educational authority under FERPA because an LEA is authorized to direct and control public elementary and secondary schools and to supervise Federal- or State-supported education programs and services in the State. Because an LEA is considered to be an educational authority, the LEA may conduct an audit or evaluation of a Federal- or State-supported education program under the audit or evaluation exception. For example, an LEA may wish to evaluate the effectiveness of a particular program in the school district.

Some commenters asked whether a State agency other than an SEA, such as a State social services agency, could be considered an ''educational agency or institution'' or a ''State or local educational authority.'' We believe that State agencies other than an SEA could, depending on the individual circumstances, be considered to be an ''educational agency or institution'' or a State educational authority under FERPA. The Department generally considers a State postsecondary commission to be a State educational authority because such commissions are typically responsible for and authorized under State law to supervise, plan, coordinate, advise, audit, or evaluate Federal- or State-supported postsecondary education programs and services in the State. Likewise, a State-administered school that receives funds under a program administered by the Secretary, such as a school serving hearing-impaired students, is considered an educational institution under FERPA because it provides educational services or instruction to students. In general, the Department does not consider a State social services agency to be an ''educational agency or institution'' under FERPA because, although such an agency may provide educational services or instruction to students, it is not authorized to direct and control public elementary or secondary or postsecondary educational institutions, and it does not have students in attendance. In addition, the Department does not consider a State social services agency to be a State educational authority because such an agency generally is not responsible for and authorized under State law to supervise, plan, coordinate, advise, audit, or evaluate federally or State-supported elementary, secondary, or postsecondary education programs and services in the State. However, because States vary widely in how they administer programs, the Department would make this determination on a case-by-case basis and evaluate the particular responsibilities of that agency before giving definitive guidance on whether a particular agency would be considered an educational agency or institution or a State or local educational authority under FERPA.

With regard to the request that we define the term ''school official'' to avoid confusion with the term ''authorized representative,'' we note that current § 99.31(a)(1) in the FERPA regulations already describes ''school official.'' This section makes clear that school officials are teachers and administrators who work within a school, school district, or postsecondary institution. The regulations also state in § 99.31(a)(1) that contractors, consultants, volunteers, or other parties to whom an educational agency or institution has outsourced institutional services or functions under the conditions listed in § 99.31(a)(1)(i)(B)(*1*) through (a)(1)(i)(B)(*3*) may be considered school officials with legitimate educational interests in students' education records. We believe that this language in § 99.31(a)(1) and the definition of ''authorized representative'' are sufficiently clear to ensure that there is no confusion between these different categories of individuals.

Changes: None.

Comment: Several commenters asked the Department to include definitions for, and examples of, the following terms: ''evaluation,'' ''audit,'' ''research,'' ''legitimate educational interest,'' ''compliance activities,'' and ''enforcement activities.''

Discussion: The terms identified by the commenters are not defined in FERPA, and the Department did not propose to define them in the NPRM because we did not wish to define them in ways that would unnecessarily restrict the educational community. Moreover, we do not believe it would be appropriate to define these terms in these final regulations because the public would not have had an opportunity to comment on them.

Changes: None.

Fair Information Practice Principles

Comment: Some commenters stated that the proposed amendments to part 99 in the NPRM represented a ''wholesale repudiation of the fair information practices.'' Others contended that the proposed regulatory changes go too far; that the changes would permit the disclosure of confidential student records to organizations that have little involvement in education, and the data will be used for purposes unrelated to education. Others expressed concern that the regulatory changes would result in student records being used for a wide range of activities under the pretext that some educational result would be derived from those activities. Others commented that obtaining parental consent to permit the disclosure of PII from education records should be the preferred approach.

Discussion: The Fair Information Practice Principles (FIPPs) are the foundation for information privacy in the United States. These principles are sometimes referred to just as FIPs (Fair Information Practices) and various versions of these principles exist with different numbering schemes. These principles include: That there be no secret recordkeeping systems; that individuals should have a way to find out information about themselves in a record and how it is used; that individuals be allowed to prevent information obtained for one purpose from being used for another; that individuals be allowed to correct records about themselves; and that the organization that created the record assure its reliability and take steps to prevent misuse. FIPPs form the basis of most State and Federal privacy laws in the United States, including FERPA. Like most privacy laws, however, the FIPPs must be adapted to fit the educational context of data disclosure. For example, one of the FIPPs principles is that individuals should have the right to prevent information for one purpose from being used for another. FERPA expressly permits the redisclosure, without consent, of PII from education

records for a reason other than the reason for which the PII was originally collected, if the redisclosure is made on behalf of the educational agency or institution that provided the PII and the redisclosure meets the requirements of sec. 99.31.

The Department is not repudiating FIPPs, but rather is making only narrow changes to its regulations that it has determined are necessary to allow for the disclosure of PII from education records to improve Federal- and State-supported education programs while still preserving student privacy. The Department remains committed to FIPPs and believes that the final regulations appropriately embody core FIPPs tenets. In fact, FIPPs underlay the Department's recent privacy initiatives, including creating a Chief Privacy Officer position,[2] creating the Privacy Technical Assistance Center (PTAC),[3] and issuing a series of technical briefs on privacy, confidentiality, and data security.

We agree that it is preferable to obtain consent before disclosing PII from education records, and nothing in these final regulations is intended to change the statutory framework for consent. Nonetheless, Congress explicitly provided in FERPA that for certain purposes, PII from education records may be disclosed without consent. 20 U.S.C. 1232g(b).

We recognize that some may fear that these final regulations will permit the disclosure of PII from education records to improper parties, or for improper purposes, but we firmly believe such fears lack foundation. To be clear, these final regulations do not permit PII from education records to be disclosed for purposes unrelated to education. For example, the statute limits disclosures to those organizations that conduct studies for the purposes of ''developing, validating, or administering predictive tests, administering student aid programs, and improving instruction.'' We believe that the best method to prevent misuse of education records is not to bar all legitimate uses of education data, but rather to provide guidance and technical assistance on how legitimate uses can be implemented while properly protecting PII from education records in accordance with FERPA.

Changes: None.

Comments: Several commenters expressed concern or confusion about how the FERPA recordation, review, and correction provisions would work at the various school, LEA, or State levels.

Several commenters raised concerns about ''up-stream data sharing'' as it relates to the validity of the information maintained in SLDS. They expressed general concern that changes made to education records at the local level would not be reflected in the SLDS, so that authorized representatives of an SEA would be looking at out-of-date information. Some commenters suggested that when schools amend education records, they should be required to forward these amendments or corrections to their LEA or SEA.

A few commenters recommended that we require schools to notify parents and eligible students when PII from education records is disclosed to an outside entity. One commenter suggested that parents and students not only be notified, but that they also be given an opportunity to opt out of the disclosure. Several commenters expressed support for the notion that parents and students should be able to inspect and review education records held by authorized representatives.

One commenter asked why the Department did not propose to use its ''putative enforcement authority'' to create the right for parents and eligible students to inspect and seek to correct education records in the hands of authorized representatives.

Discussion: We appreciate the concern that records at State and local educational authorities be up-to-date to reflect changes made at the school level. We decline, however, to require schools to forward every change to ''up-stream'' educational entities, as this would be overly burdensome. Schools correct and update student education records on a daily basis and requiring daily ''up-stream'' updates is not feasible. Rather, we urge LEAs and SEAs to arrange for periodic updates. We believe that such an arrangement will help ensure the validity and accuracy of PII from education records disclosed to LEAs and SEAs and ultimately held in an SLDS.

We decline to adopt the suggestion that schools be required to notify parents and eligible students when PII from education records is redisclosed to an outside entity, and to provide parents and eligible students with an opportunity to opt out of the disclosure. FERPA expressly provides for disclosure without consent in these circumstances, a reflection of the importance of those limited disclosures.

Under § 99.7(a), educational agencies and institutions are required to annually notify parents and eligible students of their rights under FERPA. While FERPA does not require that this notice inform parents or eligible students of individual data sharing arrangements, we believe that transparency is a best practice. For this reason, we have amended our model notifications of rights under FERPA to include an explanation of the various exceptions to FERPA's general consent disclosure rule. This change to the model notifications should help parents and eligible students understand under what circumstances, such as the evaluation of a Federal- or State-supported education program, PII from education records may be disclosed to third parties without prior written consent. The *Model Notification of Rights under FERPA for Elementary and Secondary Schools* is included as Appendix B to this notice and the *Model Notification of Rights under FERPA for Postsecondary Institutions* is included as Appendix C to this notice; these model notifications are also available on the FPCO Web site at: *http://www2.ed.gov/policy/gen/guid/fpco/ferpa/lea-officials.html* and *http://www2.ed.gov/policy/gen/guid/fpco/ferpa/ps-officials.html.*

With respect to the suggestion that we revise the regulations so that parents and eligible students can inspect and review and seek to amend education records held by authorized representatives, we note that FERPA provides a right for parents and eligible students to inspect and review their education records held by SEAs, LEAs, and schools. 20 U.S.C. 1232g(a)(1)(A) and (a)(1)(B). The statute does not provide any right to inspect and review education records held by authorized representatives of FERPA-permitted entities or other third parties (other than SEAs). Further, FERPA also provides a right for parents and eligible students to seek to amend their education records held by LEAs and schools, but not SEAs. 20 U.S.C. 1232g(a)(2). Again, however, the statute does not provide any right to seek to amend education records held by authorized representatives of FERPA-permitted entities or other third parties. For this

[2] The Department established an executive level Chief Privacy Officer (CPO) position in early 2011. The CPO oversees a new division dedicated to advancing the responsible stewardship, collection, use, maintenance, and disclosure of information at the national level and for States, LEAS, postsecondary institutions, and other education stakeholders.

[3] PTAC was established to serve as a one-stop resource for SEAs, LEAs, the postsecondary community, and other parties engaged in building and using education data systems. PTAC's role is to provide timely and accurate information and guidance about data privacy, confidentiality, and security issues and practices in education; disseminate this information to the field and the public; and provide technical assistance to key stakeholders. PTAC will share lessons learned; provide technical assistance in both group settings and in one-on-one meetings with States; and create training materials on privacy, confidentiality, and security issues.

reason, we do not have the authority to expand these statutory provisions to apply to authorized representatives of FERPA-permitted entities or other third parties (other than the right to inspect and review education records maintained by SEAs).

Parents and eligible students seeking to inspect and review a student's education records held by an authorized representative or a third party other than the SEA may contact the disclosing school or LEA. The school or LEA would then be required to allow them to inspect and review and seek to amend the education records that they maintain. Additionally, while FERPA does not accord a right to a parent or an eligible student to inspect and review and seek to amend education records held by authorized representatives, FERPA-permitted entities are free to include inspection or amendment requirements in the written agreements they enter into with their authorized representatives, assuming it is permissible under applicable State and local law to do so.

FERPA does not require parental or student notification of individual data sharing arrangements that may utilize PII from education records. However, § 99.32(a) does require recordation, except as provided in § 99.32(d), of disclosures whenever an educational agency or institution or FERPA-permitted entity discloses PII from education records under one of the exceptions to the consent requirement. Thus, the recordation provisions in § 99.32(a)(3) require educational agencies and institutions to record the parties to whom they have disclosed PII from education records and the legitimate interests the parties had in obtaining the information. This recordation must also identify the FERPA-permitted entities that may make further disclosures of PII from education records without consent (see § 99.32(a)(1)). When requested, FERPA-permitted entities must provide pursuant to § 99.32(b)(2)(iii) a copy of their record of further disclosures to the requesting educational agency or institution where the PII from education records originated within a reasonable period of time, not to exceed 30 days. For example, a school may request a record of all further disclosures made by its SEA of PII from education records from that school. The SEA would be required to comply with this request within 30 days.

Changes: None.

Legal Authority

Comment: Numerous commenters questioned the Department's legal authority to issue the proposed regulations, stating the proposals exceed the Department's statutory authority. Enacting the proposed changes, many of these commenters argued, would require legislative amendments to FERPA that could not be achieved through the rulemaking process.

Several commenters also stated that the America COMPETES Act and ARRA do not confer legal authority upon the Department to propose regulations that would allow the disclosure of PII from education records in the manner envisioned in the NPRM. While acknowledging that the America COMPETES Act generally supports the establishment and expansion of SLDS, several commenters noted that the America COMPETES Act requires States to develop and utilize their SLDS only in ways that comply with the existing FERPA regulations. One commenter stated that ARRA was merely an appropriations law and did not suggest any shift in Congressional intent regarding FERPA's privacy protections, information sharing, or the disclosure of student education records, generally.

Discussion: We disagree with commenters who stated that they believe the Department lacks the statutory authority to promulgate the proposed regulations contained in the NPRM. As a general matter, the Department has broad statutory authority to promulgate regulations to implement programs established by statute and administered by the Department. Under section 414 of the Department of Education Organization Act, 20 U.S.C. 3474, ''[t]he Secretary is authorized to prescribe such rules and regulations as the Secretary determines necessary or appropriate to administer and manage the functions of the Secretary or the Department.'' Similarly, section 410 of GEPA, 20 U.S.C. 1221e–3, provides that the Secretary may ''make, promulgate, issue, rescind, and amend rules and regulations governing the manner of operation of, and governing the applicable programs administered by, the Department.''

Neither section 444 of GEPA, which is more commonly known as FERPA, nor any other statute, limits the Department's authority to promulgate regulations to protect the privacy of PII from education records or to interpret its regulations on FERPA consistently with other Federal statutes. The proposed regulations in the NPRM fall clearly within the commonplace use of the Department's regulatory authority. Adopting these provisions is necessary to ensure that the Department's implementation of FERPA continues to protect the privacy of PII from education records, while allowing for PII from education records to be effectively used, particularly in SLDS.

Moreover, we disagree with the contention that the America COMPETES Act and ARRA do not provide evidence of Congressional intent to expand and develop SLDS to include early childhood education, postsecondary, and workforce information. We believe the America COMPETES Act and ARRA should be read consistently with FERPA, where permissible. It is a well-established canon of statutory construction that a statute must not be interpreted so that it is inconsistent with other statutes where an ambiguity exists. Where two statutes appear to be inconsistent with one another, it is appropriate to provide an interpretation that reconciles them while still preserving their original sense and purpose. *See, e.g., Lewis* v. *Lewis & Clark Marine, Inc.,* 531 U.S. 438 (2001); *Ruckelshaus* v. *Monsanto Co.,* 467 U.S. 986, 1017–18 (1984).

In this case, the Department is interpreting its regulations in a manner that is consistent with FERPA, the America COMPETES Act, and ARRA. Under section 6401(e)(2)(D) of the America COMPETES Act, Congress clearly set forth its desire that States develop SLDS that cover students from preschool through postsecondary education by including information such as ''the capacity to communicate with higher education data systems,'' ''information regarding the extent to which students transition successfully from secondary school to postsecondary education, including whether students enroll in remedial coursework,'' and ''other information determined necessary to address alignment and adequate preparation for success in postsecondary education.''

ARRA provides clear evidence of Congressional intent to support the expansion of SLDS, and is not merely an appropriations law, as suggested by one commenter. Section 14001(d) of ARRA specified that the Governor of a State desiring to receive an allocation under the State Fiscal Stabilization Fund was required to include assurances in its application that, among other things, the State will establish a longitudinal data system that includes the elements described in section 6401(e)(2)(D) of the America COMPETES Act. All States received grants under the State Fiscal Stabilization Fund. Thus, all States are required to include these 12 elements in their SLDS. Through ARRA, Congress also provided $250 million for additional State grants to support the expansion of SLDS to include postsecondary and workforce

information, providing further evidence of Congress' intention that States include these elements in their SLDS.

Interpretations of our current FERPA regulations created obstacles for States in their efforts to comply with ARRA's requirement that SLDS include the 12 elements specified in the America COMPETES Act, and thereby allow for the sharing of education data from preschool to higher education. The changes that the Department is adopting through these regulations should eliminate barriers that may have prevented States from complying with the ARRA assurances while still ensuring that PII in education records is protected under FERPA. For example, under these final regulations, a local or State educational authority may designate a postsecondary institution as its ''authorized representative,'' in connection with the evaluation of Federal- or State-supported education programs. As such, the K–12 local or State educational authority may disclose PII from education records to the postsecondary institution without consent for purposes of evaluating either the K–12 or postsecondary Federal- or State-supported education programs.

If the Department were to make no regulatory changes, as requested by several commenters, then Congress' stated intentions behind the America COMPETES Act and ARRA regarding the development and expansion of SLDS would be significantly impeded. Instead, considering the extent of data sharing contemplated by these statutes, the Department is amending several regulatory provisions that have unnecessarily hindered the development and expansion of SLDS as envisioned by the America COMPETES Act and required under ARRA, while still remaining consistent with FERPA's underlying purpose of protecting student privacy.

Changes: None.

FERPA Does Not Provide Authority for Data Collection

Comment: Several commenters expressed concern about the types of student PII described in the NPRM and what they perceived as the Department's intent to collect information on individual students. The Department received similar comments from multiple parties who inferred from the NPRM that the Department sought to collect information on students such as ''hair color, blood type or health care history.'' These commenters appeared to believe that the Department would collect this data and provide it to other Federal agencies, such as Labor and Health and Human Services, to ''facilitate social engineering such as development of the type of 'workforce' deemed necessary by the government.''

Discussion: The Department agrees that it should not collect such information or guide students ''toward predetermined workforce outcomes,'' as the commenters stated. Moreover, the Department did not propose in the NPRM to permit the collection of this information or to conduct the activities described by these commenters.

Commenters mistakenly inferred that the proposed changes to the regulations would expand the types of data collections that the Department may require as conditions of receiving Federal funds. FERPA itself does not establish the authority for any type of data collection at any level, whether Federal, State, or local. Likewise, FERPA does not authorize the establishment of SLDS. Congress granted the Department the authority to provide grants to States for the development of SLDS under section 208 of the Educational Technical Assistance Act of 2002, 20 U.S.C. 9607. States have invested in SLDS to enhance their ability to efficiently and accurately manage, analyze, and use education data, which includes PII from education records that are protected under FERPA. SLDS for K–12 education often include data related to Federal- and State-funded education programs, such as data related to assessments, grades, course enrollment and completion, attendance, discipline, special education status, homeless status, migrant status, graduation or dropout status, demographics, and unique student identifiers. Schools and LEAs are the primary collectors of these data. LEAs report these individual student-level data to the SEA to meet various requirements, and the data is warehoused in the SLDS.

For Federal K–12 reporting, SEAs report aggregated counts at the State, local, and school levels for various indicators that are required for participation in Federal education programs, such as the number of students participating in and served by Title I. Similarly, postsecondary institutions are required to complete Integrated Postsecondary Education Data Systems (IPEDS) surveys if they participate in or are applicants for participation in any Federal student financial aid program (such as Pell grants and Federal student loans). While schools, LEAs, SEAs, and postsecondary institutions maintain student-level data, what is reported to the Department in IPEDS and in Federal K–12 reporting is aggregated, at a minimum, at the institutional level. The Department does not collect PII from education records outside of its duties that require it, such as administering student loans and grants, conducting surveys, and investigating individual complaints.

The Department offers this clarification to address the public comments that mistakenly interpreted the Department's proposed regulations as a mechanism to collect sensitive personal data on individual students at the Federal level, including data elements that are not related to education, to be used for non-educational purposes. As discussed later in this preamble, the Department is not legally authorized to create a national, student-level database, and the Department has no desire or intention to create a student record data system at the national level. Thus, the SLDS mentioned in these final regulations refers to individual States' longitudinal data systems, not a Federal database.

Commenters interested in understanding more about the data collections required by the Department should visit the Department's Web site at *http://edicsweb.ed.gov* and select the ''Browse Active Collections'' link.

Changes: None.

Comment: Several commenters expressed concern that the Department's proposal would create a national database of student PII. One commenter expressed strong opposition to the establishment of a national database because of concern that such a database could be used for non-educational purposes. Another commenter recommended that the Department publicly affirm that it does not support the establishment of a national database.

Several commenters indicated that the proposed changes reflected in the NPRM would permit data sharing and linking of SLDS across State lines, allowing for the creation of a ''de facto'' national database of student PII. These commenters expressed concern that interconnected SLDS would invite substantial threats to student privacy. Another commenter noted that the prohibition regarding the establishment of a national database in the ESEA, demonstrated Congress' intent to prohibit Federal funding of an interconnected SLDS.

Discussion: The Department is not establishing a national database of PII from education records and we have no intention to do so. Moreover, neither ESEA nor HEA provides the Department with the authority to establish a Federal database of PII from education records. Specifically, ''[n]othing in [ESEA] * * * shall be construed to authorize the development of a nationwide database''

of PII from education records. 20 U.S.C. 7911. Likewise, ''nothing in [HEA] shall be construed to authorize the development, implementation, or maintenance of a Federal database'' of PII from education records. 20 U.S.C. 1015c(a).

On the other hand, we do not agree with the suggestion that Congress intended to prohibit States from developing their own SLDS or linking SLDS across State lines. The right to develop SLDS or link SLDS across State lines is reserved to the States. Both ESEA and HEA permit States or a consortium of States to develop their own State-developed databases. In fact, HEA specifically states that it does not prohibit ''a State or a consortium of States from developing, implementing, or maintaining State-developed databases that track individuals over time, including student unit record systems that contain information related to enrollment, attendance, graduation and retention rates, student financial assistance, and graduate employment outcomes.'' 20 U.S.C. 1015c(c).

The Department does not agree with those commenters who expressed concerns that the linking of SLDS across State lines would allow for the creation of a ''de facto'' national database of student PII. First, as discussed earlier, States are not prohibited from establishing their own SLDS or linking SLDS across State lines provided that they do so in compliance with all applicable laws, including FERPA. Second, if a consortium of States chose to link their individual SLDS across State lines, such a system of interconnected SLDS would not be ''national'' because the Federal Government would not play a role in its operation. Rather, responsibility for operating such a system would lie entirely with the consortium of States.

Further, Congress made clear in the America COMPETES Act and ARRA that it supports the development and expansion of SLDS. For example, title VIII of ARRA appropriated $250,000,000 to the Institute of Education Sciences to carry out section 208 of the Educational Technical Assistance Act to provide competitive grants to State for the development of their SLDS that include early childhood through postsecondary and workforce information. In addition, section 14005 of ARRA provides that in order to receive funds under the State Fiscal Stabilization Fund a State was required to provide an assurance that it will establish an SLDS that includes the elements described in section 6401(e)(2)(D) of the America COMPETES Act (20 U.S.C. 9871). Consistent with congressional intent, these activities are only being carried out at the State level, not through the creation of a Federal database. These final regulations will help reduce barriers that have hindered States and consortia of States from developing, implementing, and maintaining their own SLDS.

Changes: None.

Use of Social Security Numbers

Comment: Several commenters requested clarification on whether Social Security numbers (SSNs) could be maintained in an SLDS or used as a linking variable. These commenters stated that they had been hindered in their efforts to build a robust SLDS by limitations on the exchange of SSNs. Other commenters suggested that the use of SSNs, names, and dates of birth be minimized, and that SLDS should instead create a common identifier that would allow the SEA and its authorized representative to match student records data without an unnecessary transfer of SSNs and other identifying information.

Discussion: We understand that data contained within an SLDS cannot be used effectively without using unique linking variables. Without the use of linking variables, States would be unable to monitor the educational progress and experiences of individual students as they progress through the education system across grade levels, schools, institutions, and into the workforce.

FERPA does not prohibit the use of a SSN as a personal identifier or as a linking variable. However, we agree with commenters that the use of SSNs should be minimized given that SSNs are often used by criminals for identity theft. The Federal Government itself attempts to minimize the use of SSNs. *See, e.g.,* Office of Management and Budget (OMB) Directive M–07–16, ''Safeguarding Against and Responding to the Breach of Personally Identifiable Information,'' and ''Guidance for Statewide Longitudinal Data Systems,'' (National Center for Education Statistics (NCES) 2011- 602). The importance of limiting SSN use is recognized in FERPA, as schools are prohibited from designating SSNs as directory information. Hence, while FERPA does not expressly prohibit States from using SSNs, best practices dictate that States should limit their use of SSNs to instances in which there is no other feasible alternative.

Changes: None.

Disclosures Beyond State Lines

Comment: Several commenters sought clarification on whether FERPA allowed PII from education records to be disclosed across State lines, noting that there is increased demand to disclose PII from education records to third parties in other States to make comparative evaluations of Federal- or State-supported education programs, or to connect data on students who may be educated in multiple States. For example, one commenter asked the Department to clarify whether FERPA would permit postsecondary institutions to disclose PII from education records, including outcome data back to high schools in another State.

Several stakeholders have raised questions about whether the proposed regulations would permit the State educational authority in one State to designate a State educational authority in another State as its authorized representative to disclose PII from education records from one authority to the other.

Another commenter recommended that the Department restrict the disclosure of PII from education records under the audit or evaluation exception to authorized representatives within a State, or alternatively limit out-of-State authorized representatives to only other State educational authorities. Another commenter also asked about a school's ability to disclose PII from education records to other countries.

Discussion: FERPA makes no distinctions based on State or international lines. However, transfers of PII from education records across international boundaries, in particular, can raise legal concerns about the Department's ability to enforce FERPA requirements against parties in foreign countries. It is important to keep in mind that for a data disclosure to be made without prior written consent under FERPA, the disclosure must meet all of the requirements under the exceptions to FERPA's general consent requirement. For example, if the conditions under the audit or evaluation exception in FERPA are met, a State educational authority could designate an entity in a different State as an authorized representative for the purpose of conducting an audit or evaluation of the Federal- or State-supported education programs in either State. The disclosure of PII from education records is not restricted by geographic boundaries. However, disclosure of PII from education records for an audit or evaluation of a Federal- or State-supported education program is permitted only under the written agreement requirements in § 99.35(a)(3) that apply to that exception. Under these requirements, the disclosing entity would need to take reasonable methods

to ensure to the greatest extent practicable that its authorized representative is in compliance with FERPA, as is explained further under the *Reasonable Methods (§ 99.35(a)(2))* section in this preamble. More specifically, an LEA could designate a university in another State as an authorized representative in order to disclose, without consent, PII from education records on its former students to the university. The university then may disclose, without consent, transcript data on these former students to the LEA to permit the LEA to evaluate how effectively the LEA prepared its students for success in postsecondary education.

Changes: None.

Cloud Computing

Comment: Several commenters sought clarification on whether the proposed regulations would permit cloud computing, where data can be hosted in a different State or country. Commenters suggested that the final regulations not discriminate based on where data are hosted.

Discussion: The Department has not yet issued any official guidance on cloud computing, as this is an emerging field. We note, however, that the Federal Government itself is moving towards a model for secure cloud computing. Regardless of whether cloud computing is contemplated, States should take care that their security plans adequately protect student data, including PII from education records, regardless of where the data are hosted.

Changes: None.

Administrative Burden

Comment: Several commenters predicted an increase in administrative time and resources needed to comply with the proposed regulations, with one predicting an ''exponential'' increase. Given the current state of State budget deficits, several commenters asked the Department to provide guidance for ways to decrease burden, such as offering ''planning and streamlining administrative processes and tools,'' while still ensuring the protection of PII from education records.

Discussion: The Department appreciates this suggestion and acknowledges the current reality of State budget deficits. The Department believes, however, that regulating the specifics of data sharing would drive up costs, not reduce them. The Department notes that the changes reflected in these regulations aim to reduce the barriers to data sharing while still protecting student privacy. FERPA regulations themselves also do not require any data sharing by educational agencies or institutions; these data sharing activities are voluntary, and may occur at the discretion of educational agencies or institutions. We recognize that some educational agencies and institutions may need technical assistance from the Department to help ensure that their data sharing activities comply with these regulations, and the Department will help meet this potential need for SEAs and LEAs.

See the *Potential Costs and Benefits,* elsewhere in this preamble, for our estimation of costs associated with these regulations.

Changes: None.

Audit or Evaluation Exception (§ 99.35)

General Discussion

Comment: We received many comments supporting the proposed changes to the audit or evaluation exception. A comment co-signed by two dozen organizations supported the proposed regulations as the revised interpretations would permit more opportunities for data analysis by States, LEAs, schools, and research organizations.

Other commenters generally expressed support for the proposed changes, asserting that they would increase the ability to evaluate and improve education programs.

Supporters of the proposed regulations noted that, by reducing barriers to data sharing, more States would be able to connect their data systems to drive improvement in K–12 schools. Commenters noted several specific evaluations that would be possible with the proposed amendments to the audit or evaluation exception. For example, an evaluation of college freshmen, who all graduated from the same high school, may reveal the students needed postsecondary remediation in math. This information could help the high school improve its math program.

Likewise, career and technical education (CTE) agencies would be able to improve program effectiveness by accessing more data with their collaborative partners in workforce development and other non-educational agencies that prepare students for college and careers. Several commenters noted that these changes would allow State departments of education to assess their CTE programs and meet Federal accountability requirements in the Carl D. Perkins Vocational and Technical Education Act of 2006 (Pub. L. 109–270). Those that were supportive of these amendments stated that the written agreement requirements were reasonable and would help protect the confidentiality of the data.

Discussion: The Department agrees with these commenters that these activities would be permissible under these final regulations.

Changes: None.

Comment: One commenter stated that the Department's proposed change to remove the requirement in § 99.35(a)(2) that express authority is required under Federal, State, or local law to conduct an audit, evaluation, or enforcement or compliance activity would turn a narrow exception to consent into a ''magic incantation'' that would allow ''unfettered access'' to PII from education records for purposes other than what Congress intended. Several commenters objected on the grounds that the proposed change would result in confusion, with educational institutions struggling to separate real claims of authority from frivolous or false ones. Finally, a few commenters contended that the Department lacks the legal authority to make this proposed change.

Discussion: In 2008, we amended § 99.35(a)(2) of the Department's FERPA regulations to specifically require that legal authority exist under Federal, State, or local law to conduct an audit, evaluation, or enforcement or compliance activity. While we imposed no requirement to identify legal authority for other exceptions, we explained that we added this requirement to the audit or evaluation exception because we viewed the educational community as being significantly confused about who may receive education records without consent for audit or evaluation purposes under § 99.35. We explained that ''[i]t [was] not our intention in § 99.35(a)(2) to require educational agencies or institutions and other parties to identify specific statutory authority before they disclose or redisclose PII from education records for audit or evaluation purposes but to ensure that some local, State or Federal authority exists for the audit or evaluation, including for example an Executive Order or an administrative regulation.'' 73 FR 74806, 74822 (December 9, 2008).

In the NPRM, we proposed removing the language regarding legal authority in § 99.35(a)(2) due to confusion caused by the 2008 regulations. We explained in the preamble of the NPRM that the authority for a FERPA-permitted entity to conduct an audit, evaluation, or enforcement or compliance activity may be express or implied. The intent behind this proposed change was to make clear that Federal, State, and local

law determine whether a given audit or evaluation is permitted, not FERPA.

Based on the comments, however, we are concerned that our explanation in the NPRM was not sufficiently clear. Certainly, if an educational agency or institution is concerned that a third party seeking access to PII from education records is not authorized under Federal, State, or local law to conduct an audit, evaluation, or enforcement or compliance activity, that educational agency or institution should seek guidance from its attorneys or from the State attorney general if the concern involves the interpretation of State law. If the concern involves the interpretation of Federal law, the educational agency or institution should seek guidance from its attorneys or from the Federal agency that administers the law in question. FERPA itself does not confer the authority to conduct an audit, evaluation, or enforcement or compliance activity.

We disagree with the commenters' contention that the Department lacks legal authority to amend the 2008 regulations. Because the statute itself does not specifically require that legal authority is necessary under Federal, State, or local law before an audit, evaluation, or enforcement or compliance activity may be conducted—and is, in fact, entirely silent on this issue—we retain the authority, subject to rulemaking requirements, to remove the language we added in 2008, effectively clarifying that the authority may be either express or implied. This deletion makes § 99.35(a)(2) consistent with the rest of the regulations, which do not address legal authority beyond FERPA.

Changes: None.

Comment: One commenter stated that the Department lacked the authority to regulate how education records are shared with respect to programs that are funded by the U.S. Department of Health and Human Services (HHS). Specifically, this commenter stated the authority to regulate education records maintained by Early Head Start and Head Start programs (collectively, ''Head Start'') fell within the exclusive jurisdiction of HHS and could not be regulated by the Department of Education. This commenter relied upon a provision in the Head Start Act that states the:

> Secretary [of HHS], through regulation, shall ensure the confidentiality of any personally identifiable data, information, and records collected or maintained under this subchapter by the Secretary or any Head Start agency. Such regulations shall provide the policies, protections, and rights equivalent to those provided to a parent, student, or educational agency or institution under [FERPA].

42 U.S.C. 9836a(b)(4)(A). This commenter also suggested that the Department and HHS work together to minimize the financial burden of the proposed regulations on Head Start agencies.

Discussion: We disagree with the commenter's contention that proposed §§ 99.3 and 99.35 would supplant the authority of HHS as those provisions relate to Head Start; these proposed changes would not overreach into HHS' ''sphere of activity.'' First, we note that FERPA applies directly to LEAs that receive funding under a program administered by the Department, including the Head Start programs that they operate. Concurrent jurisdiction exists between the Department and HHS for these Head Start programs. The Department did not propose in the NPRM that FERPA requirements would apply to Head Start programs not under the concurrent jurisdiction of the Department and HHS.

Further, under current regulations, SEAs and LEAs receiving funding under a program administered by the Department—and, therefore, falling under the Department's exclusive jurisdiction—are unable to disclose PII from educational records, such as the kindergarten grades of former Head Start students, to Head Start programs in order to evaluate the effectiveness of the Head Start programs. These final regulations permit State and local educational agencies and BIE funded and operated schools to disclose PII from education records to Head Start programs for an audit, evaluation, or enforcement or compliance activity. We believe this change aligns with Congress' stated intention in the America COMPETES Act and ARRA to link data across all sectors. Permitting access to student longitudinal data also builds upon the Department's and HHS' commitment to coordinate programs administered by State and local educational agencies and BIE funded and operated schools with early learning programs administered by non-educational agencies.

Finally, the Department believes that any potential financial burden on Head Start agencies that may result from these regulations is outweighed by the elimination of unnecessary barriers to the evaluation of their programs and the increased flexibility in the operation of their programs. Nonetheless, the Department is committed to working with HHS to minimize the financial burden of these regulations should such an increase in burden actually occur.

Changes: None.

Comment: One commenter asked whether the proposed regulations would allow an entity that receives PII from education records under the audit or evaluation exception to redisclose the PII from education records over the original disclosing entity's objection.

Discussion: In 2008, we amended the FERPA regulations to expressly permit FERPA-permitted entities to redisclose PII from education records received under the audit or evaluation exception in certain conditions. See § 99.33(b)(1) and (b)(2). For example, this change permitted an SEA to redisclose PII ''on behalf of'' the LEA if the redisclosure is to another school where the student seeks or intends to enroll, under §§ 99.31(a)(2) and 99.34 and the recordkeeping requirements in § 99.32(b)(1) or (b)(2) are met.

However, in 2008 we did not clarify that a redisclosure under the studies exception would be on behalf of an educational agency or institution if the SEA or other FERPA-permitted entity believed it would benefit the educational agency or institution.

In the NPRM, we specifically proposed that FERPA-permitted entities that receive PII from education records under the audit or evaluation exception be able to redisclose the PII from education records under the studies exception if all requirements to that exception are met. For example, a FERPA-permitted entity would be permitted to redisclose PII from education records under the studies exception in § 99.31(a)(6) if: (1) The FERPA-permitted entity has the express or implied legal authority to have the study in question conducted, and (2) the educational agency or institution either agrees to the redisclosure, in which case the redisclosure would be ''for'' the educational agency or institution, or the study is designed to improve instruction, in which case the redisclosure would be ''on behalf of'' the educational agency or institution. Accordingly, a redisclosure may be ''for'' or ''on behalf of'' of the original disclosing entity even if that entity objects to the redisclosure. For instance, an SEA receiving PII from an LEA may redisclose PII ''on behalf of'' the LEA if the redisclosure is for a study designed to improve the LEA's instruction. In this example, it would be irrelevant if the LEA objected to the SEA's redisclosure. FERPA-permitted entities that make further disclosures of PII from education records under the studies exception also must comply with the conditions specified in § 99.31(a)(6) and ensure that the recordkeeping requirements in § 99.32(b)(1) or (b)(2) have been met.

Changes: None.

Definition of ''Education Program'' (§§ 99.3 and 99.35)

Comment: Many commenters were supportive of the proposal to define the term ''education program.'' Many of these commenters commended the Department's proposal to adopt a broad definition of ''education program'' because doing so recognizes the fact that education begins prior to kindergarten and involves programs not administered by State or local educational agencies. While some commenters expressed concern that an overly broad definition of ''education program'' would result in extraneous programs being wrongly allowed access to student PII from education records, others expressed concern that an overly narrow definition would hinder legitimate data sharing needed to improve education programs. One commenter was concerned that the definition would omit programs many believe are necessary for students to succeed but may not be ''principally engaged in the provision of education.'' The commenter gave several examples including substance abuse, anti-bullying, and suicide prevention programs.

Numerous commenters provided other examples of specific programs and asked the Department to identify if those programs would be considered an education program under the proposed definition. Commenters specifically requested clarity about what types of early childhood programs would be considered education programs. A few commenters suggested that the Department utilize the HEA definition of ''early childhood education program.''

One commenter suggested that we change ''principally'' to ''primarily'' in the definition of ''education program.'' Another recommended that the definition include ''transitions from secondary to postsecondary education.'' We also received the suggestion that we amend the definition of ''education program'' to specify that the program must be principally engaged in the provision of education to students in early childhood through postsecondary.

One commenter requested further clarity regarding who determines whether a program meets the definition of ''education program'' and how to handle any potential disputes regarding that determination.

Another commenter suggested that the Department was acting outside of its legal authority to expand the use of PII from education records to programs not administered by an educational agency or institution, and termed it an ''unreasonable interpretation.''

Discussion: The Department has decided to make several changes to the definition as a result of the comments received. Whether a program is determined to be an education program should be based on the totality of the program, and not on whether the program contains a specific ''incidental educational or training activity within a broader non-education program,'' as suggested by one commenter. The number of commenters requesting clarity on which early childhood programs would be considered education programs under FERPA suggested a real need for the Department to define the term in the regulations to support faithful implementation of the FERPA amendments in the field. We agree with those commenters who suggested that the Department utilize the HEA definition of ''early childhood education program'' and are adopting this definition for several key reasons. By adopting a definition already established by Congress, we are confident that it will provide the requested clarity. This definition also provides greater consistency across Federal programs, resulting in more transparency and less burden.

The final regulations provide that any program administered by an educational agency or institution is considered to be an education program. We have made this change to ensure that, in addition to programs dedicated to improving academic outcomes, this definition includes programs, such as bullying prevention, cyber-security education, and substance abuse and violence prevention, when administered by an educational agency or institution.

It is the Department's intent that the following types of programs, regardless of where or by whom they are administered, fall under the new definition of ''education program'': The educational programs conducted by correctional and juvenile justice facilities or alternative long-term facilities such as hospitals, dropout prevention and recovery programs, afterschool programs dedicated to enhancing the academic achievement of its enrollees, schools for the hearing and visually impaired, college test tutoring services, and high school equivalency programs. The following are examples of the types of programs that will generally be excluded from the definition of ''education program'': Programs that are principally engaged in recreation or entertainment (such as programs designed to teach hunting, boating safety, swimming, or exercise), programs administered by direct marketers, and neighborhood book clubs. These are not all-inclusive lists; each program will need to be assessed to determine if it meets this regulatory definition of ''education program'' because it is principally engaged in the provision of education.

The Department declines to change the word ''principally'' to ''primarily'' in the definition of ''education program'' because we view these terms as being synonymous and interchangeable. The Department also declines to explicitly state that transitions from secondary to postsecondary education are included in the definition, because any transition program must meet the definition of ''education program,'' and it may be misleading to list some types of these programs and not others. The Department further declines to amend the definition of ''education program'' to require that the education program be principally engaged in the provision of education to ''students'' in early childhood through postsecondary education. Explicitly adding ''students'' to the definition would potentially exclude certain programs that would otherwise fit under this definition and that the Department intends to include. For example, this change would be particularly problematic for early childhood education programs, such as Head Start and IDEA Part C, which refer to their participants as children and infants or toddlers, respectively, not students. Head Start and IDEA Part C are explicitly included in the definition of ''early childhood education program,'' and the Department refrains from adding language that would contradict this definition and create confusion for implementation.

FERPA-permitted entities may disclose PII from education records without obtaining consent in order to conduct an audit, evaluation, or enforcement or compliance activity. FERPA permits these disclosures to occur without consent, but FERPA-permitted entities have the discretion to set their own policies and practices for implementing these disclosures, including any resolution processes that may be necessary to handle disputes regarding whether a program meets the definition of education program.

Finally, we disagree with the commenters who suggested that the Department lacks the legal authority to define ''education program'' in a way that would allow authorized representatives to use PII from education records to evaluate programs not administered by an educational agency or institution. As discussed elsewhere in greater detail, the

Department has broad authority under GEPA to promulgate regulations that implement programs established by statute and administered by the Department, including FERPA. In this case, nothing in the statute itself or its legislative history limits the Department's authority to define ''education program,'' a previously undefined term.

The new definition of ''education program'' helps to ensure that the FERPA regulations do not impede States' ability to comply with ARRA. As discussed in the NPRM, in order to ensure that the Department's regulations do not create obstacles to States' compliance with ARRA, the Department sought to find a solution that would give effect to both FERPA and this more recent legislation by defining the term ''education program'' to include programs that are not administered by an educational agency or institution.

The Department's definition of the term ''education program'' is intended to facilitate the disclosure of PII from education records, as necessary, to evaluate a broad category of education programs.

The Department's definition of ''education program'' is also intended to harmonize FERPA and ARRA so as to protect PII from education records, even where the Department may not have a direct funding relationship with the recipient of PII from education records. We believe that the definition of the term ''education program'' sufficiently recognizes those common elements among entities that need to evaluate education programs and services, regardless of whether the education programs are funded by the Department.

Changes: In § 99.3, we have added a definition of the term ''early childhood education program.'' In addition, we have revised the definition of ''education program'' to include any program that is administered by an educational agency or institution.

Comment: One commenter requested that the Department clarify that PII from education records disclosed without obtaining consent under the audit or evaluation exception must be limited to PII related to educational data, given the wider variety of health information and other PII included in the school records of students with disabilities.

Discussion: Under the audit or evaluation exception, PII from education records may be disclosed without consent only to audit or evaluate Federal- or State-supported education programs, or to enforce or to comply with Federal legal requirements related to such programs. If PII from education records related to a student's health is necessary to evaluate an education program, this information may be disclosed without obtaining consent, provided all other requirements in the regulations are met. However, the same information would not be permitted to be disclosed without obtaining consent to evaluate the effectiveness of a health program.

Changes: None.

Definition of Authorized Representative (§§ 99.3 and 99.35)

Comment: Numerous commenters expressed support for our proposed definition of the term ''authorized representative.'' Among other reasons given for support, commenters stated that they were confident that the definition would facilitate better evaluations or would lead to an increased ability to conduct evaluations of Federal- and State-supported education programs. One commenter stated that the proposed definition was appropriate and necessary and reasonable in scope. One commenter was especially pleased that an SEA or LEA would have the ability to designate an individual or entity under the new definition for the purposes of conducting evaluations. Multiple commenters stated that the proposed definition would assist SEAs in handling PII disclosed from education records and in linking it across sectors, including the education and workforce sectors for the purposes of an audit, evaluation, or enforcement or compliance activity.

Finally, one commenter stated that FERPA-permitted entities under § 99.31 should include tribal education agencies (TEAs). This commenter contended that because FERPA regulations allow for the disclosure, without consent, of PII from education records to ''State and local educational authorities'' for audit or evaluation of Federal- and State-funded education programs, TEAs—the education arms of sovereign tribal governments—should also be allowed to access PII from education records without consent.

Discussion: The Department agrees with these commenters that the definition of the term ''authorized representative'' in the final regulations will increase the ability of FERPA-permitted entities to conduct audits or evaluations of Federal- and State-funded education programs, including those that link PII from education records across the education and workforce sectors.

As for TEAs, the Department's current interpretation of ''State and local educational authorities'' does not include them. Although the Department, as part of its proposal for the reauthorization of ESEA, supports strengthening the role of TEAs in coordinating and implementing services and programs for Indian students within their jurisdiction, we did not propose to define the term ''State and local educational authorities'' in the NPRM and, therefore, decline to regulate on it without providing the public with notice and the opportunity to comment. The Department's interpretation of the term ''State and local educational authorities'' does, however, include BIE.

Changes: None.

Comment: One commenter requested that we clarify the proposed definition of the term ''authorized representative'' to make it more similar to the regulatory language currently used in § 99.35(a)(1). This commenter expressed concern that, in our proposed definition, an authorized representative could be interpreted to mean an individual or entity who is engaged only in activities connected to Federal legal requirements related to Federal or State supported education programs. The commenter noted that § 99.35(a)(1) addresses both audit or evaluation activities associated with a Federal- or State-supported education program, and activities associated with enforcement of, or compliance with, Federal legal requirements that relate to those programs. The commenter recommended that we clarify the definition of the term ''authorized representative'' to align it with § 99.35(a)(1) and make clear that the Federal legal requirement only modifies the compliance or enforcement activity. Specifically, when describing the activities an authorized representative can carry out, the commenter requested we add an ''or'' between the words ''audit'' and ''evaluation,'' as opposed to a comma, and the word ''any'' before the term ''compliance or enforcement activity.''

Discussion: We intend for our definition of the term ''authorized representative'' to cover both an individual or an entity engaged in the enforcement of or compliance with Federal legal requirements related to Federal- or State-supported education programs, and also to cover an individual or an entity conducting an audit or evaluation of a Federal- or State-supported education program. Accordingly, we are making this clarification in the definition.

Changes: We have made the minor changes suggested by the commenter to the definition of ''authorized representative''.

Comment: Multiple commenters suggested that the Department exceeded

its legal authority by proposing to define the term ''authorized representative.'' While acknowledging that FERPA does not define this term, these commenters stated that authorized representatives should only consist of the Comptroller General, the Attorney General, the Secretary, and State and local educational authorities since FERPA specifically allows for the disclosure of PII from education records to these entities. The commenters contended that expanding the definition beyond the four entities specifically identified in FERPA would be impermissible and that such a change would require congressional action. A few commenters pointed to a statement from the preamble to the final FERPA regulations (73 FR 74806, 74828) published in the **Federal Register** on December 9, 2008, in which the Department stated that ''any further expansion of the list of officials and entities in FERPA that may receive education records without the consent of the parent or the eligible student must be authorized by legislation enacted by Congress.''

Other commenters objected to the rescission of the ''direct control'' requirement contained in the policy guidance on authorized representatives issued by then-Deputy Secretary of Education William D. Hansen in a memorandum dated January 30, 2003 (Hansen Memorandum). The Hansen Memorandum required that under the ''audit or evaluation exception,'' an authorized representative of a State educational authority must be a party under the direct control of that authority, *e.g.,* an employee or a contractor. Under the Hansen Memorandum, an SEA or other State educational authority could not disclose PII without consent from education records to other State agencies, such as a State health and human services department, a State unemployment insurance department, or a State department of labor because these State agencies were not under the SEA's direct control.

Commenters further cited the conclusion in the Hansen Memorandum that the two references to the word ''officials'' in paragraph (b)(3) of FERPA reflect a congressional concern that the authorized representatives of a State educational authority be under the direct control of that authority. Specifically, commenters relied upon a December 13, 1974, joint statement in explanation of the Buckley/Pell Amendment (Joint Statement) that suggested that FERPA ''restricts transfer, without the consent of parents or students, of PII concerning a student to * * * auditors from the General Accounting Office and the Department of Health, Education, and Welfare.'' From this Joint Statement, these commenters suggested that Congress did not intend for ''authorized representative'' to be defined as broadly.

Commenters also cited several policy reasons for precluding other entities from serving as authorized representatives of FERPA-permitted entities, including that this definition would weaken the accountability of State or local educational authorities and would allow criminals, repeated privacy violators, and those with dubious standing to serve as authorized representatives. One commenter questioned whether individual State politicians or private companies could be authorized representatives.

One commenter, though supporting our definition of the term ''authorized representative,'' suggested that the definition of the term was too narrow and should be broadened to include child welfare agencies and their obligations to monitor the education outcomes of the children in their care. One commenter challenged the Department's proposed definition of ''authorized representative'' on the grounds that it constituted an unlawful sub-delegation of the Department's statutory authority by vesting the interpretation of FERPA in non-Federal entities. This commenter cited *U.S. Telecom Ass'n* v. *F.C.C.,* 359 F.3d 554, 565 (DC Cir., *cert. denied,* 543 U.S. 925 (2004), in support of the position that such delegations are ''improper absent an affirmative showing of congressional authorization.''

Discussion: It is important to note that FERPA does not define the term ''authorized representative.'' In the absence of a statutory definition, the Supreme Court has made it clear that it is appropriate to ''construe a statutory term in accordance with its ordinary or natural meaning.'' *See, e.g., FDIC* v. *Meyer,* 510 U.S. 471, 476 (1994).

In this case, ''authorize'' is commonly understood to mean to: ''Invest especially with legal authority: EMPOWER * * *.'' ''Representative'' is commonly understood to mean: ''* * * standing or acting for another especially through delegated authority * * *.'' *Merriam-Webster's Collegiate Dictionary* (11th Ed. 2011).

Following these standard definitions of ''authorize'' and ''representative,'' it is entirely appropriate that we permit State educational authorities, the Secretary, the Comptroller General, and the Attorney General to have the flexibility and discretion to determine who would best be able to represent them in connection with audits, evaluations, or enforcement or compliance activities. Restricting their discretion to select only their own officers and employees or those under their ''direct control'' is not required by the term's plain, dictionary meaning.

Additionally, we do not find the policy concerns for precluding other entities from serving as authorized representatives offered by commenters to be persuasive. While nothing in the final regulations specifically prohibits a State politician or private company, for example, from being designated as an authorized representative, the full requirements under FERPA must be met before PII from education records may be disclosed to any party. These regulations do not expand any of the reasons an individual or an entity can be designated as an authorized representative. As before, it may only be done to conduct an audit, evaluation, or enforcement or compliance activity. For example, to authorize a representative to conduct an evaluation, there must be a written agreement specifying the terms of the disclosure, and PII from education records may only be used for the purposes specified in the written agreement; the FERPA-permitted entity authorizing the evaluation must also take reasonable methods to ensure to the greatest extent practicable that its authorized representative complies with FERPA, as is explained in the ''Reasonable Methods (§ 99.35(a)(2)),'' section later in this preamble. If an individual or organization sought access to PII from education records for its own purpose, disclosure of the PII from education records without consent would not be permitted under FERPA, and the FERPA-permitted entity must not authorize the representative or permit the disclosure of PII from education records without consent. The written agreement operates as a contract between the FERPA-permitted entity and the authorized representative, so in the event that an individual or entity misuses PII from education records for purposes other than those that are authorized, there would be recourse according to the terms specified in the written agreement, in addition to any enforcement actions the Department may take.

Also, we continue to believe that there are good policy reasons to allow other agencies to serve as authorized representatives of FERPA-permitted entities. As we explained in the NPRM, we believe that our prior interpretation of the term ''authorized representative'' unduly restricted State and local educational authorities from disclosing PII from education records for the purpose of obtaining data on post-

school outcomes, such as employment of their former students, in order to evaluate the effectiveness of education programs. Accordingly, we believe that our interpretation reflected in these final regulations reasonably permits State and local educational authorities, the Secretary, the Comptroller General, and the Attorney General of the United States to have the necessary flexibility and discretion to determine who may represent them with respect to audits and evaluations of Federal- or State-supported education programs and to enforce and to comply with Federal legal requirements that relate to such programs, subject to the requirements in FERPA.

Some commenters also appear to have misunderstood the Department's previous interpretation of the term ''authorized representative'' and mistakenly assumed that the Department has historically only permitted employees and contractors of FERPA-permitted entities to serve as authorized representatives. This is not the case. For instance, prior to the issuance of the Hansen Memorandum in 2003, the Department entered into a memorandum of agreement with the Centers for Disease Control and Prevention (CDC) in which the Department designated the CDC to serve as its authorized representative for purposes of collecting information under the Metropolitan Atlanta Developmental Disabilities Surveillance Program.

Further, prior to the Hansen Memorandum, the Department had provided guidance that State educational authorities could designate a State Unemployment Insurance agency as an authorized representative for the purpose of conducting wage record matches to carry out the performance reporting requirements of the Workforce Investment Act (WIA). Memorandum on Application of FERPA to Reporting for Eligible Training Providers under Title I of WIA from Judith A. Winston, Undersecretary of the Department of Education, (January 19, 2001).

Further, in the 2008 FERPA regulations, the term ''authorized representative'' was not limited to employees and contractors of the FERPA-permitted entities. In the preamble to those regulations, we wrote:

> In general, the Department has interpreted FERPA and implementing regulations to permit the disclosure of personally identifiable information from education records, without consent, in connection with the outsourcing of institutional services and functions. Accordingly, the term ''authorized representative'' in § 99.31(a)(3) includes contractors, consultants, volunteers, and other outside parties (*i.e.,* nonemployees) used to conduct an audit, evaluation, or compliance or enforcement activities specified in § 99.35, or other institutional services or functions for which the official or agency would otherwise use its own employees. For example, a State educational authority may disclose personally identifiable information from education records, without consent, to an outside attorney retained to provide legal services or an outside computer consultant hired to develop and manage a data system for education records.

73 FR 74806, 74825 (Dec. 9, 2008).

In other words, since 2008, we have included within the definition of ''authorized representative'' any outside party used to conduct an audit, evaluation, or enforcement or compliance activity specified in § 99.35, or other institutional services or functions for which the official or agency would otherwise use its own employees. These outside parties were required to be under the direct control of an SEA pursuant to the Hansen Memorandum; however, as we discuss in further detail in the following paragraphs, the Department has decided to eliminate the Hansen Memorandum's direct control requirement in these final regulations.

The statement in the preamble to the 2008 final regulations that ''any further expansion of the list of officials and entities in FERPA that may receive education records without the consent of the parent or the eligible student must be authorized by legislation enacted by Congress,'' means that any expansion of the current statutory exceptions to the consent requirement must be authorized by Congress. Today's change is not an expansion of the statutory exceptions to the consent requirement; rather it is a modification of the Department's interpretation of a term used in one of FERPA's existing statutory exceptions to consent so as to be consistent with recent developments in the law.

Moreover, the 2008 FERPA amendments did not provide an exhaustive or comprehensive list of the exceptions to the written consent requirement that would permit disclosure to non-educational State agencies. Rather, we noted that there are ''some exceptions that might authorize disclosures to non-educational State agencies for specified purposes'' and listed as examples disclosures made under the health or safety emergency exception (§§ 99.31(a)(10) and 99.36), the financial aid exception (§ 99.31(a)(4)), or pursuant to a State statute under the juvenile justice exception (§§ 99.31(a)(5) and 99.38). This was not an exhaustive listing of FERPA exceptions to the general consent requirement that would permit disclosure to non-educational State agencies. For example, a disclosure without consent also may be made to non-educational State agencies pursuant to the exception for lawfully issued subpoenas (§ 99.31(a)(9)), but this was not included in the 2008 preamble.

Even if the preamble to the 2008 final regulations clearly stated that the officials and agencies listed under § 99.31(a)(3)(i) through (a)(3)(iv) could not designate non-educational State agencies as their authorized representatives—which it did not—the Department still retains the authority to change its interpretation through notice-and-comment rulemaking, especially in light of recent legislation. Accordingly, because the term ''authorized representative'' is not defined in the statute, and the America COMPETES Act and ARRA have provided evidence of Congressional intent to expand and develop SLDS to include early childhood, postsecondary, and workforce information, the Department has decided to change its interpretation of the term ''authorized representative'' in order to permit State and local educational authorities, the Secretary of Education, the Comptroller General, and the Attorney General of the United States to have greater flexibility and discretion to designate authorized representatives who may access PII from education records as needed to conduct an audit, evaluation, or enforcement or compliance activity specified in § 99.35.

In response to commenters who objected to the rescission of the Hansen Memorandum's direct control requirement, the direct control requirement is not found in FERPA and is inconsistent with requirements of the America COMPETES Act and ARRA. We do not interpret the two references to the word ''officials'' in paragraph (b)(3) of FERPA as defining who may serve as an authorized representative of the officials listed in the exception. This would, in fact, limit those who could serve as an authorized representative to officials of the heads of agencies listed, which is inconsistent with the position adopted by the Hansen Memorandum. Rather, we interpret the word ''officials'' in paragraph (b)(3) of FERPA as simply a reference back to the four officials who are listed in the exception: the Secretary, the Comptroller General, the Attorney General of the United States, and State educational authorities.

The 1974 Joint Statement stated that ''existing law restricts transfer, without the consent of parents or students, of personally identifiable information

concerning a student to * * * auditors from the General Accounting Office and the Department of Health, Education, and Welfare * * *'' 120 Cong. Rec. at 39863 (December 13, 1974). FERPA, however, was originally enacted on August 21, 1974. Thus, the Joint Statement provides little more than a retrospective narrative background regarding the exception to consent in 20 U.S.C. 1232g(b)(1)(C) and (b)(3), which already was in existing law and was not being amended in December 1974. Further, the Joint Statement only provides a short-hand and incomplete summary of this exception to consent. Significantly, the Joint Statement omits many aspects of this then-existing exception, which in addition to permitting disclosure of PII from education records without consent to ''authorized representatives of'' the Comptroller General and the Secretary of Health, Education, and Welfare (as referred to in the Joint Statement) also permitted disclosure without consent to ''authorized representatives of'' ''State educational authorities'' and ''an administrative head of an education agency.'' See section 513 of Pub. L. 93–380 (August 21, 1974). Further, this then existing exception to consent permitted disclosure of PII from education records without consent not only for the conduct of audits by auditors (as referred to in the Joint Statement), but also for the conduct of evaluations and the enforcement of Federal legal requirements. *Id.*

While we support the efforts in the Hansen Memorandum to protect student privacy, the Hansen Memorandum's direct control requirement resulted in State and local educational authorities engaging in convoluted processes to conduct an audit, evaluation, or enforcement or compliance activity that may serve only to increase costs and lessen privacy protection. Student privacy can be protected without having to prohibit disclosure of PII from education records to other entities in order to conduct an audit, evaluation, or enforcement or compliance activity. Although increased data sharing may result from our definition of ''authorized representative,'' it still would only be permitted under the terms of the exception. To disclose PII from education records without consent to an authorized representative (other than an employee), the exception requires written agreements and the use of reasonable methods to ensure to the greatest extent practicable FERPA compliance by an authorized representative. Further, an authorized representative's use of PII from education records is restricted to audits, evaluations, or enforcement or compliance activities.

The Department also disagrees that its definition of ''authorized representative'' constitutes an unlawful sub-delegation of authority to non-Federal entities. Although *U.S. Telecom* stands for the proposition that certain Federal agency sub-delegations are improper, its holding is inapposite when applied to the Department's definition of the term ''authorized representative'' in § 99.3. Unlike the statutory language in 20 U.S.C. 1232g(b)(1)(C) and (b)(3) that specifically identifies authorized representatives of the designated entities as potential recipients to whom PII from education records may be disclosed without consent, the authorizing statute at issue in *U.S. Telecom* assigned the FCC the specific responsibility of making impairment determinations:

> ''* * * the Commission shall consider, at a minimum, whether—(A) access to such network elements as are proprietary in nature is necessary; and (B) the failure to provide access to such network elements would impair the ability of the telecommunications carrier seeking access to provide the services that it seeks to offer''.

See 47 U.S.C. 251(d)(2). The *U.S. Telecom* court rejected the FCC's argument that it possessed the presumptive authority to sub-delegate its statutory decisionmaking responsibilities to any party absent congressional intent to the contrary. In this case, however, the Department is not attempting to delegate its decisionmaking authority and is only permitting authority for an audit, evaluation, or enforcement or compliance activity to be delegated to authorized representatives of FERPA-permitted entities, as Congress specifically identified in FERPA.

U.S. Telecom is similarly distinguished in *Fund for Animals* v. *Norton,* 365 F. Supp. 2d 394 (S.D.N.Y. 2005), which held that the Fish and Wildlife Service (FWS) did not act unlawfully by delegating limited authority over management of cormorant populations to regional FWS and State wildlife services directors, State agencies, and federally recognized Indian Tribes. *Fund for Animals* emphasized that FWS' delegation was not inconsistent with the statutory requirements and thus was entitled to deference under the Supreme Court's decision in *Chevron U.S.A. Inc.* v. *NRDC,* 467 U.S. 837 (1984). *Id.* at 410–11. Unlike the FCC's wholesale delegation to State commissioners of its statutory responsibility to make access determinations under 47 U.S.C. 251(d)(2), the FWS retained ultimate control over the delegates' determinations.

Likewise, in adopting the definition of the term ''authorized representative,'' the Department is not delegating its statutory authority to address violations of FERPA under 20 U.S.C. 1232g(f). The Department is simply delegating the authority to the entities specified in 20 U.S.C. 1232g(b)(1)(C) and (b)(3) to determine who may serve as their authorized representatives to conduct an audit, evaluation, or enforcement or compliance activity. This delegation is premised on compliance with other statutory and regulatory conditions, in connection with audits, evaluations, or enforcement or compliance activities.

Some commenters asked that we expand the definition of the term ''authorized representative'' to include child welfare agencies, to allow these agencies to monitor the educational outcomes of children under their care and responsibility. Paragraph (b)(3) of FERPA, however, does not allow this expansion of the purposes for which PII from education records may be used by authorized representatives. While we agree that authorized representatives of State educational authorities may generally include child welfare agencies, authorized representatives may only access PII from education records under paragraph (b)(3) of FERPA in order to conduct audits, evaluations, or enforcement or compliance activities.

Changes: None.

Comment: One commenter expressed concern about being held responsible for the disclosure of PII from education records to an authorized representative over which it does not have direct control, such as another State agency, if the authorized representative improperly redisclosures that information. This commenter, therefore, recommended that the FERPA regulations provide that a State or local educational authority is not required to comply with FERPA in regard to PII from education records that it discloses to an authorized representative over which it does not have direct control. In the alternative, this commenter requested that the regulations clarify that a State or local educational authority retains control over the entity or individual designated as its authorized representative through the required written agreement to ensure PII from education records is protected from unauthorized redisclosure.

Discussion: Like any disclosing entity, State or local educational authorities have an important responsibility to

protect the privacy of PII from education records. To carry out this responsibility, a State or local educational authority must use reasonable methods to ensure to the greatest extent practicable that its authorized representative is complying with FERPA. A disclosing State or local educational authority, such as an SEA, also must enter into a written agreement with its authorized representative that details the responsibilities of both parties to protect the PII from education records disclosed to the authorized representative by the educational authority. If the State or local educational authority, such as an SEA, does not have confidence that the authorized representative will meet its responsibilities under the written agreement to protect PII from education records, the State or local educational authority should not authorize the individual or entity as a representative. The Department would be abdicating its responsibility under FERPA to protect the privacy of PII from education records if we released a State or local educational authority from responsibility when it discloses PII from education records to an authorized representative that is not under its direct control, such as another State agency.

Changes: None.

Comment: One commenter stated that, because the definition of ''authorized representative'' would allow ''any individual or entity'' to be designated as an authorized representative, the Department appears to be adopting a position under which an authorized representative is not required to have a ''legitimate educational interest'' to receive PII from education records under the audit or evaluation exception.

Discussion: We believe the regulations clearly articulate that a FERPA-permitted entity may only disclose PII from education records to an authorized representative under the audit or evaluation exception if the authorized representative will use PII from education records for one of the statutorily-specified purposes, *i.e.,* if it is needed to conduct audits, evaluations, or enforcement or compliance activities. We have revised the regulations regarding written agreements between FERPA-permitted entities and their authorized representatives to include a requirement that the written agreement establish the policies and procedures that limit the use of PII from education records to only authorized representatives for statutorily-specified purposes. If an authorized representative receives PII from education records for one of these statutorily-specified purposes, then this constitutes a legitimate interest in receiving PII from education records. We have not required that authorized representatives have ''legitimate educational interests'' in receiving PII from education records, as suggested by the commenter, because we already require in § 99.31(a)(1) of the current regulations that educational agencies and institutions must determine that school officials have legitimate educational interests. Because authorized representatives differ from school officials and may receive PII from education records only for statutorily-specified purposes, we refer to the interests of authorized representatives in receiving PII from education records as ''legitimate interests.''

Changes: We have revised § 99.35(a)(3)(v) to substitute the phrase ''authorized representatives with legitimate interests in the audit or evaluation of a Federal- or State-supported education program or for compliance or enforcement of Federal legal requirements related to these programs'' for the phrase ''authorized representatives with legitimate interests.''

Comment: Some commenters indicated that the proposed definition of ''authorized representative'' should be amended so that authorized representatives may use PII from education records for any compliance or enforcement activity in connection with State legal requirements that relate to Federal- or State-supported education programs, as opposed to just Federal legal requirements.

Discussion: The Department lacks the statutory authority to make the requested change to expand the disclosures of PII from education records permitted without consent to include compliance or enforcement activity in connection with State legal requirements that relate to Federal- or State-supported education programs. Specifically, section (b)(3) and (b)(5) of FERPA only permit the disclosure of PII from education records, without consent, ''in connection with the enforcement of the Federal legal requirements'' that relate to Federal- or State-supported education programs. Accordingly, the Department is unable to expand the permitted disclosures of PII from education records to include a compliance or enforcement activity in connection with State legal requirements.

Changes: None.

Comment: One commenter also requested that, in lieu of the proposed definition of ''authorized representative,'' we provide that State agencies or other entities responsible for an education program, as that term was defined in the NPRM, are educational authorities for the limited purpose of the administration of their Federal- or State-supported education programs and that such entities are subject to the enforcement powers of the Department.

Discussion: We did not propose in the NPRM to define the term ''State and local educational authorities,'' which is used in § 99.31(a)(3). Therefore, we do not believe it is appropriate to define this term without providing the public with notice and the opportunity to comment on a proposed definition. Further, we do not agree that every entity that is responsible for an ''education program'' would be considered a State or local educational authority. As explained earlier in the preamble, the Department has generally interpreted the term ''State and local educational authorities'' to mean LEAs, SEAs, State postsecondary commissions, BIE, or entities that are responsible for and authorized under State or Federal law to supervise, plan, coordinate, advise, audit, or evaluate elementary, secondary, or postsecondary education programs and services in the State. Thus, we would not consider individual schools or early learning centers to be State or local educational authorities. Finally, the Department's enforcement powers with respect to a State or local educational authority are dependent on whether the educational authority receives funding under a program administered by the Secretary. If an educational authority does not receive such funding, then the Department's only FERPA enforcement measure would be the five-year rule.

Changes: None.

Comment: Several commenters stated that the Department should adopt additional remedies or sanctions to hold authorized representatives accountable.

Discussion: FERPA authorizes the Secretary to pursue specific remedies against recipients of funds under programs administered by the Secretary. Congress expressly directed the Secretary to ''take appropriate actions'' to ''enforce'' FERPA and ''to deal with violations'' of its terms ''in accordance with [GEPA].'' 20 U.S.C. 1232g(f). In GEPA, Congress provided the Secretary with the authority and discretion to take enforcement actions against any recipient of funds under any program administered by the Secretary for failures to comply substantially with FERPA (or other requirements of applicable law). 20 U.S.C. 1221 and 1234c(a). GEPA's enforcement methods expressly permit the Secretary to issue a complaint to compel compliance

through a cease and desist order, to recover funds improperly spent, to withhold further payments, to enter into a compliance agreement, or to ''take any other action authorized by law,'' including suing for enforcement of FERPA's requirements. 20 U.S.C. 1234a, 1234c(a), 1234d, 1234e; 1234f; 34 CFR 99.67(a); *see also United States* v. *Miami Univ.,* 294 F.3d 797 (6th Cir. 2002) (affirming district court's decision that the United States may bring suit to enforce FERPA). Thus, if an authorized representative receives funds under a program administered by the Secretary, the Department has the authority to enforce failures to comply with FERPA under any of GEPA's enforcement methods. If an authorized representative does not receive funds under a program administered by the Secretary and improperly redisclosures PII from education records, then the only remedy available under FERPA against the authorized representative would be for the Department to prohibit the disclosing educational agency or institution from permitting the authorized representative from accessing PII from education records for a period of not less than five years. 20 U.S.C. 1232g(b)(4)(B). These are the only remedies available to the Department to enforce FERPA. Remedies, such as assessing fines against any entity that violates FERPA, are not within the Department's statutory authority.

Under the FERPA regulations, and in accordance with its longstanding practice, the Department only will take an enforcement action if voluntary compliance and corrective actions cannot first be obtained. If the violating entity refuses to come into voluntary compliance, the Department can take the above listed enforcement actions. However, in addition to these statutorily authorized remedies, we encourage FERPA-permitted entities to consider specifying additional remedies or sanctions as part of the written agreements with their authorized representatives under § 99.35 in order to protect PII from education records. Written agreements can be used to permit increased flexibility in sanctions, to the extent that the desired sanction is permitted under law.

Changes: None.

Reasonable Methods (§ 99.35(a)(2))

Comment: Commenters were split on whether it was appropriate to define ''reasonable methods'' in the regulations. Some commenters agreed that the Department should not prescribe reasonable methods in the regulations and welcomed the additional flexibility offered by the proposed regulations. Others criticized the failure of the proposed regulations to require specific reasonable methods, contending that the Department was taking steps to allow more access to PII from education records but was not taking commensurate steps to prevent misuse of PII from education records being disclosed. One commenter requested further clarification on the expected enforcement actions the Department would take if an LEA or SEA did not use reasonable methods to ensure that its authorized representatives were in compliance with FERPA before disclosing PII from education records to them.

Discussion: The Department proposed the reasonable methods requirement to increase accountability so that FERPA-permitted entities disclosing PII from education records hold their authorized representatives accountable for complying with FERPA. FERPA-permitted entities must monitor the data handling practices of their own employees. They must also use reasonable methods to ensure FERPA compliance to the greatest extent practicable by their authorized representatives. The Department believes that FERPA-permitted entities should be accorded substantial flexibility to determine the most appropriate reasonable methods for their particular circumstances. In other words, what constitutes a reasonable method for ensuring compliance is not a one-size-fits-all solution; there are numerous actions a FERPA-permitted entity may take to ensure to the greatest extent practicable FERPA compliance by its authorized representatives. Nonetheless, while the Department is granting more flexibility to determine appropriate reasonable methods given the specific circumstances of the data disclosure, the Department will consider a FERPA-permitted entity disclosing PII from education records to its authorized representative without taking any reasonable methods to be in violation of FERPA and subject to enforcement actions by the Department.

It is worth noting that the FERPA regulations already require that educational agencies and institutions use reasonable methods such as access controls so that school officials only may access those education records in which they have a legitimate educational interest. See § 99.31(a)(1)(ii). The lack of specificity in § 99.31(a)(1)(ii) is appropriate, given variations in conditions from school-to-school. The Department believes similar flexibility is appropriate when FERPA-permitted entities disclose PII from education records to authorized representatives.

While the Department declines to impose specific requirements for reasonable methods, we are issuing non-regulatory guidance on best practices for reasonable methods as Appendix A. Variations of the elements appear in Appendix A as best practices for written agreements. In the following paragraphs, we provide a summary and discussion of the various suggestions for reasonable methods the Department received in response to the NRPM, and discuss whether we consider them best practices. Please note that Appendix A may also include best practices that were not mentioned by commenters, but that the Department believes would result in both increased data and privacy protection.

Reasonable methods are those actions the disclosing FERPA-permitted entity would take to ensure to the greatest extent practicable that its authorized representative complies with FERPA. The disclosing FERPA-permitted entity should generally take most of these actions by requiring them in its written agreement with its authorized representative. Many commenters discussed how reasonable methods could ensure FERPA compliance, but some commenters suggested that these techniques be required for FERPA-permitted entities in addition to their authorized representatives. While this is beyond the scope of the reasonable methods contemplated in the regulations, the best practices that the Department provides apply equally to other entities as a starting point for good data governance, the responsible use of data, and the protection of student privacy.

The Department has already produced several technical briefs that address many of the suggestions the Department received on reasonable methods and written agreements: ''Basic Concepts and Definitions for Privacy and Confidentiality in Student Education Records,'' ''Data Stewardship: Managing Personally Identifiable Information in Electronic Student Education Records,'' and ''Statistical Methods for Protecting Personally Identifiable Information in Aggregate Reporting.'' The briefs can be found at *http://nces.ed.gov/programs/ptac/Toolkit.aspx?section=Technical%20Briefs.* The Department is continually looking to improve the best practices information found in the briefs and encourages comments and suggestions to be emailed to the Department at *SLDStechbrief@ed.gov.* As with the best practices in Appendix A to this document, these briefs serve as resources for practitioners to consider

adopting or adapting to complement the work they are already doing; they are not one-size-fits-all solutions.

Changes: None.

Comment: One commenter objected to the use of the word ''ensure,'' as it was proposed in § 99.35(a)(2), stating the term was ''unrealistic and misleading'' as nothing could definitively ensure that FERPA violations would not happen.

Discussion: The Department agrees with the commenter and is changing the language concerning reasonable methods in § 99.35(a)(2) to clarify that we expect FERPA-permitted entities to be responsible for using reasonable methods to ensure to the greatest extent practicable that their authorized representatives protect PII from education records in accordance with FERPA.

Changes: Section 99.35(a)(2) has been revised to state that FERPA-permitted entities are ''responsible for using reasonable methods to ensure to the greatest extent practicable that any entity or individual designated as its authorized representative'' protects PII from education records.

Comment: The Department received multiple suggestions on actions a FERPA-permitted entity should take to verify that its authorized representative is trustworthy and has a demonstrated track record of protecting data responsibly. Several comments suggested the need to verify that an authorized representative has disciplinary policies and procedures in place to ensure that employees who violate FERPA are dealt with appropriately, including possible termination of employment. Others suggested that individuals accessing PII from education records as authorized representatives should be required to undergo criminal background checks. A number of commenters suggested that the Department require verification that the authorized representative has a training program to teach employees who will have access to PII from education records about their responsibilities under FERPA. A common suggestion was to require the authorized representative to verify that it has no previous record of improperly disclosing PII from education records. One possible method of corroboration included requiring the authorized representative to divulge under penalty of perjury, both to the entity disclosing the data and to the general public, parents, and students, whether it has violated any written agreements or otherwise inappropriately disclosed FERPA-protected data. Another suggested receiving assurances that the authorized representative has no previous record of improperly disclosing PII from education records and that it is not currently ''under suspension'' from any State or local educational authority for inappropriate disclosure of student data. Multiple commenters also suggested that the Department publish a list of individuals or entities we found to have violated FERPA and against which we have taken enforcement actions. Some commenters stated that reasonable methods should include verifying that the authorized representative is not on that list published by the Department, while others suggested that individuals and entities on the list should be prevented from entering into future written agreements with all other FERPA-permitted entities, not just the FERPA-permitted entity whose data were mishandled.

Discussion: The Department agrees that it is vital to verify that the individual or entity acting as an authorized representative has proven that it is trustworthy and has policies and procedures in place to continue that record. While the Department will not mandate any specific requirements, the best practices for reasonable methods in Appendix A include:

- *Verify the existence of disciplinary policies to protect data.* The FERPA-permitted entity may want to verify that its authorized representative has appropriate disciplinary policies for employees that violate FERPA. This can include termination in appropriate instances.
- *Know to whom you are disclosing data.* The FERPA-permitted entity may want to require its authorized representative to conduct background investigations of employees who will have access to PII from education records, or it may want to conduct these investigations itself. Additionally, the FERPA-permitted entity may want to require its authorized representative to disclose past FERPA or data management violations. If the FERPA-permitted entity discovers past violations, it would want to explore the circumstances behind the violation, and discover all information that would allow it to make an informed judgment on whether the individual or entity is likely to be a responsible data steward. This may include discovering whether the violation was covered up, including if it was voluntarily reported to affected students or FPCO, and whether appropriate breach response procedures were followed.
- *Verify training.* The FERPA-permitted entity may want to verify that its authorized representative has a training program to teach its employees about FERPA and how to protect PII from education records, or the FERPA-permitted entity may want to train its authorized representatives itself.

As these are best practices, it is up to the FERPA-permitted entities to determine which actions are appropriate based on the circumstances; it is their responsibility to determine whether their authorized representatives understand their obligations under FERPA and whether they are likely to comply with FERPA's requirements. For example, even if an authorized representative discloses a past FERPA violation, a FERPA-permitted entity may nonetheless determine that the circumstances are such that it is still appropriate to disclose PII from education records to that individual or entity. The disclosing entity should take all factors into account, including the length of time since the violation, subsequent good behavior, corrective actions taken to negate the possibility of any similar future violations, *etc.*

For the time being, the Department has decided not to implement the idea of compiling a list of FERPA violators. The Department believes that a public list of entities that have violated FERPA is an intriguing idea and will continue to keep this idea in mind and possibly implement it at a later date.

The Department declines to broaden the requirement that, under the five-year rule, the authorized representative is prevented only from receiving PII from education records from the educational agency or institution that originally disclosed the PII from education records. The statutory language is clear that the five-year rule only permits the Department to prohibit further disclosures from the educational agenc(ies) or institution(s) which maintained the original education records from which PII was improperly redisclosed.

If an authorized representative is alleged to have violated FERPA, the Department will also investigate the complaint to determine the extent to which the disclosing FERPA-permitted entity employed reasonable methods. The Department's investigation will consider the reasonable methods taken and the specific circumstances of the disclosure.

Changes: None.

Comment: Numerous commenters suggested that FERPA-permitted entities should require their authorized representatives to use specific data security methods in order to ensure FERPA compliance. Many commenters provided suggestions for data security methods, including: Requiring strong encryption, publishing security

guidelines, instituting dual-key login, preparing formal security assessments, instituting a security audit program, completing formal risk assessments, monitoring security events, creating data disposal procedures, implementing access controls, and monitoring physical security controls, including what people keep on their desks and printers. Several commenters stated that the Department should specifically regulate data security, as HHS does in the Health Insurance Portability and Accountability Act of 1996 Security Rule, 45 CFR 164.306 *et seq.*

Discussion: The Department does not believe it is appropriate to regulate specific data security requirements under FERPA. The Department believes it is more appropriate to allow for flexibility based on individual circumstances. In addition, rapid changes in technology may potentially make any regulations related to data security quickly obsolete. With the increasing move toward mobile computing, evolving hacking techniques, and the push toward ever stronger encryption standards, we believe that it is inadvisable to establish specific regulations in this area.

Still, the Department recognizes the important need, especially with the development of SLDS, for authorized representatives to have strong data security policies and programs in place. Data security is also an essential part of complying with FERPA as violations of the law can occur due to weak or nonexistent data security protocols. As such, the Department is adding the following to its best practices, which are included as Appendix A to this document:

• *Verify the existence of a sound data security plan.*

The FERPA-permitted entity may wish to verify before disclosing PII from education records that its authorized representative has a sound data security program, one that protects both data at rest and data in transmission. A FERPA-permitted entity has a responsibility to determine if its authorized representative's data security plan is adequate to prevent FERPA violations. The steps that the disclosing entity may need to take in order to verify a sound data security program are likely to vary with each situation. In some cases, it may suffice to add language to the written agreement that states what data security measures are required. In other cases, it may be more prudent for the FERPA-permitted entity to take a hands-on approach and complete a physical inspection. Additionally, the FERPA-permitted entity's written agreements could specify required data security elements, including requirements related to encryption, where the data can be hosted, transmission methodologies, and provisions to prevent unauthorized access.

Changes: None.

Comment: Some commenters suggested that the Department mandate that FERPA-permitted entities require their authorized representatives to implement various practices that fall under the rubric of data governance. Several commenters suggested the addition of various staff positions as part of a proper data governance strategy. One commenter suggested that the Department require LEAs to appoint formal FERPA compliance liaisons who would develop FERPA policies and procedures and provide professional development to those at the LEA who handle PII from education records. Another commenter suggested that the FERPA-permitted entity require the authorized representative to create an information security office. One commenter recommended, that as data governance is ultimately the responsibility of everyone in an organization, that the FERPA-permitted entity should require its authorized representative to adopt a formal governance plan that includes all levels of stakeholders, such as management, the policy team, data providers, and data consumers. The same commenter recommended that the Department require FERPA-permitted entities to have a formal communications plan so expectations regarding the governance plan are known to everyone.

Discussion: The Department declines to regulate specific data governance requirements, as we prefer to grant FERPA-permitted entities the flexibility to determine the appropriate elements for their authorized representatives to include in a comprehensive governance plan. The Department is adding the following element to the best practices for reasonable methods in Appendix A:

Verify the existence of a data stewardship program. The FERPA-permitted entity may want to examine its authorized representative's data stewardship program. Data stewardship should involve internal control procedures that protect PII from education records and include all aspects of data collection—from planning to maintenance to use and dissemination. The Department believes that a good data stewardship plan would have support and participation from across the organization, including the head of the organization, management, legal counsel, and data administrators, providers, and users. The plan should detail the organization's policies and procedures to protect privacy and data security, including the ongoing management of data collection, processing, storage, maintenance, use, and destruction. The plan could also include designating an individual to oversee the privacy and security of the PII from the education records it maintains.

As with data security, it is up to the FERPA-permitted entities to determine if the authorized representative's data stewardship plan is sufficient. Depending on the circumstances of the disclosure, this may include simply adding a description of the data governance plan to the written agreement or conducting an on-site inspection to ensure the authorized representative is properly implementing its plan.

Changes: None.

Comment: Multiple commenters suggested ways that reasonable methods could be used to prevent the authorized representative from improperly redisclosing PII from education records. Some commenters expressed concern that there is no bright line rule for how long PII from education records could be maintained by an authorized representative before it was required to be destroyed or returned. One commenter suggested a period of five years should be mandated as the maximum time PII from education records could be kept. Others expressed the view that exact timelines for keeping data were not warranted. Some requested that the Department clarify how PII from education records can be retained for purposes of long-term analysis.

Several commenters asked the Department to require a formal process to document the destruction or return of the disclosed PII from education records, such as a notarized letter, to ensure that both the disclosing FERPA-permitted entity and the authorized representative are upholding their responsibilities. Some commenters argued that this type of process would be ideal as it is often too difficult for the disclosing FERPA-permitted entity to verify that PII from education records has in fact been fully destroyed, and that the authorized representative did not maintain some electronic copy of the PII. If such a notarized statement were required, one commenter then asserted that the FERPA-permitted entity making the disclosure be held harmless if its authorized representative nonetheless maintained a copy of the data. Others stated that there should be more flexibility, such as permitting the storage of PII from education records in

secure archives as opposed to fully returning or destroying it.

The Department also received comments suggesting that we limit the number or nature of data elements in PII from education records that can be disclosed or included in an SLDS, including how that data could potentially be linked to other information. The Department received comments stating that FERPA-permitted entities should be given the right to review any document being published by the authorized representative that uses the disclosed PII from education records to ensure that proper disclosure avoidance techniques were used to prevent an unauthorized disclosure. Finally, several commenters requested that reasonable methods include a provision that would allow the disclosing FERPA-permitted entity access to the authorized representative's policies, procedures, and systems to conduct monitoring and audit activities to ensure the authorized representative is taking all necessary steps to protect the PII from education records. Some commenters stated that these audits should be completed by independent third parties. Other commenters requested that the results of the audits be disclosed to the public.

Discussion: The Department believes that outlining the time period that an authorized representative can maintain data for the purpose of an audit, evaluation, or enforcement or compliance activity is extremely important, which is why it is one of the minimum required components of the written agreement (see § 99.35(a)(3)(iv)). Nonetheless, the Department declines to specify a set period of time in the regulations for data retention, as the necessary amount of retention time is highly fact specific. For example, if an SEA is disclosing PII from education records to an authorized representative for an evaluation that is expected to take six months, it may be, depending on the circumstances of the evaluation, reasonable to require that the authorized representative to destroy the disclosed PII in six months. If, however, an SEA is disclosing PII from education records to a regional entity for a longitudinal, multi-year evaluation, the written agreement might specify that data retention would be reviewed annually, with data elements being retained or destroyed as appropriate. The Department believes it is important to leave the determination of the appropriate time period up to the parties to the agreement.

The comments about methods for destruction do, however, point out a potential inconsistency in the NPRM that should be corrected. The NPRM provided that in some instances data must be destroyed when no longer needed, and that the data must be returned or destroyed in other instances. We believe the reference to returning data was more appropriate in a paper-based environment, and that destroying data is the more appropriate action when discussing electronic records. An entity could elect to destroy the data in question by returning the original file and erasing all versions of the data from its servers.

Accordingly, we have decided to remove the proposed requirements in § 99.35(a)(3)(iii) and (a)(3)(iv) that permitted an authorized representative to return PII from education records to the FERPA-permitted entity, in lieu of destroying such information, in order to correct the inconsistency.

While the Department is not regulating on this particular process, when assessing responsibility, if the Department finds that PII from education records has not been appropriately destroyed by an authorized representative, the Department would review all of the reasonable methods taken by the disclosing FERPA-permitted entity, such as if the written agreement included a formal process to verify the destruction of PII from education records.

The Department is not addressing through the FERPA regulations the number or nature of elements that can be disclosed, included in an SLDS, or linked to other elements. As stated earlier, FERPA is not a data collection statute, and it is beyond the scope of the statute to address these issues in these regulations. So long as all requirements of FERPA are met, the parties to the agreement have the flexibility to determine what elements should be disclosed and how they can be combined with other elements. Still, the FERPA regulations require that PII from education records may not be used for any purpose other than the audit, evaluation, or enforcement or compliance activity that prompted the original disclosure.

It is important that the authorized representative not purposely or inadvertently redisclose PII from education records inappropriately. For example, the written agreement could reflect the expectations that the FERPA-permitted entities have of the authorized representatives when it comes to making the data public. Methods, such as using disclosure avoidance techniques or exercising the right to review and approve any reports using the data before release, can be detailed in the written agreement to help ensure that unauthorized redisclosures do not happen.

In addition, the FERPA-permitted entities might wish to maintain the right to conduct monitoring and audits of the authorized representative's processes, procedures, and systems. If the FERPA-permitted entities decide to exercise this right, they should be free to choose who should conduct the audits or monitoring activities, whether it is themselves or an external third party, and if the results should be made public. The Department declines to regulate on this issue as we do not believe that it will always be necessary to conduct such audits or monitoring activities. The parties to the data disclosure agreement can determine if such activity is warranted based on criteria, such as the scope or duration of the audit, evaluation, or enforcement or compliance activity.

Based on the discussion in this section, we are including the following elements in Appendix A as best practices for FERPA-permitted entities to consider when implementing reasonable methods.

- *Convey the limitations on the data.* A FERPA-permitted entity should take steps to ensure that its authorized representative knows the limitations on the use of the data (*i.e.,* that the data is only to carry out the audit or evaluation of Federal- or State-supported education programs, or to enforce or to comply with Federal legal requirements that relate to those programs).
- *Obtain assurances against redisclosure.* A FERPA-permitted entity should obtain assurances from its authorized representative that the data will not be redisclosed without permission, including such assurances that the authorized representative will provide the FERPA-permitted entity (the disclosing entity) the right to review any data prior to publication and to verify proper disclosure avoidance techniques have been used.
- *Be clear about destruction.* A FERPA-permitted entity should set clear expectations so its authorized representative knows what process needs to be followed for the proper destruction of PII from education records.
- *Maintain a right to audit.* A FERPA-permitted entity should maintain the right to conduct audits or other monitoring activities of the authorized representative's policies, procedures, and systems.
- *Disclose only PII from education records that is needed.* When the FERPA-permitted entity considers disclosing PII from education records to an authorized representative for an

audit, evaluation, or enforcement or compliance activity, it may want to explore which specific data elements are necessary for that activity and provide only those elements. FERPA-permitted entities should take care to ensure that they are not disclosing more PII from education records than needed for the stated activity and purpose. FERPA-permitted entities should also explore whether PII from education records is actually required, or whether de-identified data would suffice.

Changes: The Department has removed the proposed requirement in § 99.35(a)(3)(iii) and (a)(3)(iv) that permitted an authorized representative to return PII from education records to the FERPA-permitted entity, in lieu of destroying such information, in order to be more consistent with the statute and to correct an inconsistency in the NPRM.

Written Agreements (§ 99.35(a)(3))

Comment: As with reasonable methods, the Department received mixed comments on the value of the proposed written agreement requirement and suggestions for how to improve it. One commenter, while approving of the written agreement provision, expressed concern that the proposed changes would relieve data recipients of responsibility for actually implementing protections, theorizing that the agreements would require only that ''policies and procedures'' be established, rather than the inclusion of any provisions providing true accountability. Other commenters requested that the Department provide the flexibility to FERPA-permitted entities to draft agreements that meet the needs and requirements of the circumstances of the data disclosures and the requirements of the relevant State and local laws. One requester asked the Department to add the phrase ''including but not limited to'' when referring to the specific requirements of written agreements as laid out in the NPRM. Several commenters requested further guidance on written agreements, including asking the Department to provide a model template. One commenter asked the Department to provide clarity around why the ''other than an employee'' language is included in the written agreement requirement. Another commenter requested that the Department replace the term ''written agreement'' with ''data exchange agreement'' because the commenter believed the ''written agreement'' term is too vague and ''data exchange agreement'' is the standard information security term.

Discussion: The Department proposed adding a new § 99.35(a)(3) to require written agreements when FERPA-permitted entities designate an authorized representative (other than an employee) under the audit or evaluation exception. The proposal included several specific provisions that must be included in written agreements: (1) Designate the individual or entity as an authorized representative; (2) specify the information to be disclosed and that the purpose for which the information is disclosed to the authorized representative is to carry out an audit or evaluation of Federal- or State-supported education programs, or to enforce or to comply with Federal legal requirements that relate to those programs; (3) require the authorized representative to destroy or return to the State or local educational authority or agency headed by an official listed in § 99.31(a)(3) personally identifiable information from education records when the information is no longer needed for the purpose specified; (4) specify the time period in which the information must be returned or destroyed; and (5) establish policies and procedures consistent with FERPA and other Federal and State confidentiality and privacy provisions to protect personally identifiable information from education records from further disclosure (except back to the disclosing entity) and unauthorized use, including limiting use of personally identifiable information to only authorized representatives with legitimate interests.

While the Department agrees that it is vital that written agreements clearly set forth all parties' obligations with respect to PII from education records, the Department believes that it would be inappropriate to be more prescriptive than the specific safeguards and provisions we are including in these regulations. The Department believes that it is more appropriate to provide the parties to the agreements with the flexibility to draft written agreements that meet the specific needs of the circumstances surrounding the data disclosure. In addition, the Department defers to State law governing contracts and written agreements, including the imposition of allowable sanctions.

While the Department declines to impose additional requirements for written agreements, the Department is including in Appendix A a summary of best practices for written agreements. In the following discussion, we address comments and suggestions the Department received and whether the Department considers these best practices. Appendix A also includes best practices that have not been mentioned in the comments, but the adoption of which the Department believes would result in increased accountability for all parties to the agreement. At this time the Department is not providing a model template for a written agreement but intends to issue one as additional non-regulatory guidance at a later date. It is also worth noting that the studies exception has had a requirement for written agreements since 2008. The matters discussed here logically apply to PII from education records disclosed under both the studies and audit or evaluation exceptions. It is only through the use of written agreements that parties can establish legally binding roles and responsibilities.

We specifically carve out employees from the written agreement requirements reflected in § 99.35(a)(3) because the Department is not requiring written agreements when FERPA-permitted entities use their own employees to conduct audits, evaluations, or compliance or enforcement activities. Agreements under the audit or evaluation exception are only necessary when an authorized representative is selected that is outside of the organization disclosing the data. Employees have an inherently different relationship with their employing organization than does an outside entity. It is important that any organization with access to PII from education records train its employees about their responsibilities under FERPA, including proper data governance and data security procedures. We would expect, therefore, that organizations would establish conditions of employment for their employees that are consistent with the components required of written agreements under § 99.35(a)(3) and that violations of those conditions would result in disciplinary actions, up to and including termination.

The Department declines to add the suggested ''including but not limited to'' language when referring to the minimum written agreement provisions specified in the regulations. The language in the final regulations, as proposed in the NPRM, reads that the written agreement must include these provisions but does not indicate that these are the only provisions that can be included in the written agreement. As such, the Department believes that the ''including but not limited to'' language is implied and therefore unnecessary.

Likewise, the Department declines to change the term ''written agreement'' to ''data exchange agreement.'' ''Written agreement'' is a general term that would include the more specific ''data

exchange agreement.'' The Department is leaving it up to the discretion of the parties to the agreement to decide how the agreement may be termed, whether that be written agreement, contract, memorandum of understanding, data exchange agreement, or some other term.

Changes: None.

Comment: Several commenters seemed to misinterpret one of the Department's proposed required components of the written agreement: ''Specify the information to be disclosed and that the purpose for which the information is disclosed to the authorized representative is to carry out an audit or evaluation of Federal or State supported education programs, or to enforce or to comply with Federal legal requirements that relate to those programs.'' These commenters stated that the Department was requiring the written agreement to include ''the purposes for which the information is being disclosed.'' Others noted that anytime PII from education records is shared through one of the exceptions to the general consent rule under FERPA, the specific reasons for that disclosure should be clearly stated.

Discussion: The Department originally only proposed that a written agreement include a statement that the purpose of the disclosure was for an audit, evaluation, or enforcement or compliance activity. The NPRM did not include a requirement to describe the details of the activity or why PII from education records was a necessary component to the activity. Based on the comments we received, the Department is revising the regulations to require that written agreements include a description of the audit, evaluation, or enforcement or compliance activity.

Changes: Section 99.35(a)(3)(ii)(C) is added to require that the written agreement include a description of the activity with sufficient specificity to make clear that the work falls within the exception of § 99.31(a)(3), including a description of how the personally identifiable information from education records will be used.

Comment: Several commenters suggested that FERPA-permitted entities should be required to provide information about PII from education records being disclosed, such as the data elements being shared and the purpose of the disclosure, to parents and other stakeholders. Use of a Web site for this purpose was specifically recommended, particularly for posting the information on the minimum provisions required for written agreements. One commenter noted that it was important for the written agreements to be made available in order for the public to provide oversight regarding the appropriateness of the data disclosures.

Discussion: The Department concurs that transparency is important to ensuring the accountability of all parties. While we decline to issue regulations requiring it, we suggest that FERPA-permitted entities post substantive information on their Web sites or in other public locations about the disclosure of PII from education records, including the written agreements governing data disclosures and information about specific projects and uses. As such, we have added the following to Appendix A as a best practice:

• *Inform the public about written agreements.* Transparency is a best practice. The FERPA-permitted entity might want to post its data sharing agreements on its Web site, or provide some equivalent method to let interested parties know what data it is sharing, the reasons it is being disclosed, and how it is being protected. While the Department generally recommends public posting of written agreements, parties are encouraged to review their contractual data security provisions carefully and redact, prior to publication, any provisions that may aid those seeking unauthorized access to systems. In certain instances a separate confidential IT Security Plan may be appropriate.

Changes: None.

Comment: The Department received multiple suggestions on ways to increase the legal protections offered by the written agreements. Several commenters requested that the Department explicitly require that the written agreements comply with all applicable laws, whether at the Federal, State, or local level. One commenter specifically mentioned ensuring compliance with State data security laws and policies. Several commenters requested the inclusion of provisions that would ensure that Institutional Review Board (IRB) protocols are in place and properly implemented. Another commenter requested that the Department require the written agreement to include a provision specifying the legal authority for the data disclosure in order to ensure that anyone disclosing or receiving PII from education records has the authority to do so. Finally, the Department received many comments stating that increased accountability over authorized representatives could be achieved if the Department required that written agreements have the force of a contract under applicable State law. Specifically, these commenters strongly urged the Department to mandate, as a condition of data disclosure, that the written agreements include contractual safeguards such as liquidated damage provisions for breach of the agreement and third party beneficiary status for individuals whose PII from education records is disclosed.

Discussion: The Department agrees with many of the suggestions included in these comments; however, we decline to incorporate them as regulatory requirements. Rather, many suggestions have been included as best practices for written agreements in order to provide FERPA-permitted entities with the flexibility to craft provisions in the written agreements that meet their specific needs and the circumstances of the data disclosures. The Department agrees that the written agreements must comply with all applicable laws at the Federal, State, and local levels. This would include any State data security laws. The Department cannot regulate through FERPA on whether IRB review and approval is necessary or prudent. On the other hand, if the circumstances surrounding the audit, evaluation, or enforcement or compliance activity dictate that IRB involvement is required, it would be a best practice for the written agreement to reflect that. It should be noted, however, that the amendments are not intended to supersede the research regulations under the Common Rule that apply to Federally funded research of educational data that qualifies as human subject research. This includes the requirement that the researcher receive a waiver from an IRB if they intend to conduct research with identifiable information without consent of the participants.

The Department also agrees that it is sensible to list the express or implied legal authority that permits the data disclosure and the audit, evaluation, or enforcement or compliance activity. As stated elsewhere in this document, FERPA itself does not grant the authority for these activities, and the existence of this authority is generally a matter of other Federal, State, and local laws.

In general, the Department agrees with the view that written agreements should be used, to the extent permissible under applicable State law, to ensure that authorized representatives (other than employees) comply with FERPA to the greatest extent practicable. While the Department believes that there is merit in having written agreements that clearly set forth all parties' obligations with respect to FERPA-protected information, the Department believes

that it would be inappropriate to require that the parties include specific contractual safeguards. The fact that the authority to enforce FERPA lies with the Department should not be taken to abrogate the responsibility that FERPA-permitted entities have to protect PII from education records. FERPA-permitted entities that are disclosing PII from education records to authorized representatives (other than employees) are encouraged to provide for sanctions in their written agreements, and to enforce those sanctions. The Department believes that it is appropriate to defer to applicable State laws governing contracts and written agreements for purposes of safeguarding FERPA-protected information.

Based on these suggestions, the following is being added to the best practices listed in Appendix A:

• *Identify and comply with all legal requirements.* It is important to remember that FERPA may not be the only law that governs a data sharing agreement. The agreement could broadly require compliance with all applicable Federal, State, and local laws and regulations, and identify the legal authority (whether express or implied) that permits the audit, evaluation, or enforcement or compliance activity.

• *Mention Institutional Review Board (IRB) review and approval.* While FERPA does not mention IRBs, research proposals involving human subjects may have to be reviewed and approved by IRBs, if required under protection of human subject regulations of the Department and other Federal agencies. If IRB review and approval is required or expected, this may be noted in the written agreement.

• *Identify penalties.* The agreement could include penalties under State contract law such as liquidated damages, data bans of varying length, and any other penalties the parties to the agreement deem appropriate. The FERPA-permitted entity may want its agreement to create third-party beneficiary rights, *e.g.,* allowing parties injured by a data breach to sue for damages. While FERPA itself has little flexibility for sanctions, the FERPA-permitted entity can include a wide range of appropriate sanctions in its written agreements.

Changes: None.

Comment: Several commenters suggested that because the disclosure of PII from education records may create serious risks such as identify theft, the proposed regulations should require timely notification to parents and eligible students when their data has been disclosed as a result of a data security breach. Commenters also suggested that the written agreement include provisions for the handling of the breach, such as who would bear the costs associated with notifying those affected.

Discussion: The Department takes seriously the suggestion that parents and eligible students should be notified when PII from education records has been disclosed in violation of FERPA and agrees that notice should be given when there is a data security breach. However, the Department declines to impose through the FERPA regulations specific requirements for breach notification. This will allow FERPA-permitted entities the requisite flexibility to ascertain the appropriate responses and approaches to their particular situations and to comply with any existing Federal, State, or local laws or regulations governing breach notification.

Good data governance also includes breach notification; every organization responsible for managing education records that contain PII should maintain a breach response plan. These plans should provide specific guidelines for an appropriate and timely response to a breach, including a clear description of what constitutes a breach, and a description of the immediate steps to be taken in the event that a breach is suspected. In particular, there should be a designated person in the management chain who will be notified in the event of actual or suspected breaches. When a breach occurs, the designated authority should conduct an analysis of the likelihood of exposure and potential harm to affected individuals. This analysis will inform whether notification is warranted and what its content may be. There should also be an analysis of the circumstances that resulted in the breach, so that the system or procedures can be modified as quickly as possible to avoid further breaches through the same mechanism.

Although the Department is not regulating on breach notification, the following is being added to the best practices listed in Appendix A:

• *Have plans to handle a data breach.* While no one anticipates a data breach, data loss may occur. The FERPA-permitted entity may wish to include specific procedures in its written agreements detailing the parties' expectations in the event that PII from education records is lost, including specifying the parties' responsibilities with regard to breach response and notification and financial responsibility.

Changes: None.

Comment: The Department received requests to clarify to whom breaches of written agreements should be reported.

Discussion: As discussed earlier in this preamble, it is not only the FERPA regulations that govern what can be included in a written agreement. As such, it is important to address any remedies that are also available under State law. Nonetheless, a breach of the provisions in a written agreement may also constitute a violation of FERPA and should therefore be reported to FPCO.

Changes: None.

Comment: None.

Discussion: The Department wishes to reduce the implementation burden of the new written agreement requirement in § 99.35(a)(3) on FERPA-permitted entities by only requiring that new, renewed, or amended written agreements with authorized representatives that are entered into on or after the effective date of the regulations comply with the new requirement. The written agreement requirement in § 99.35(a)(3) must be adhered to for any new designation of an authorized representative that is not an employee as of the effective date of these regulations. As provided in the DATES section of the preamble, for written agreements that are in place with authorized representatives prior to the effective date of the regulations, FERPA-permitted entities must comply with the written agreement requirements in § 99.35(a)(3) when they renew or amend their agreements.

Changes: None.

Protection of PII From Education Records By FERPA-Permitted Entities (§ 99.35(b)(1))

Comment: None.

Discussion: The Department wishes to make the language used to refer to FERPA-permitted entities in § 99.35(b)(1) consistent with the language used to refer to FERPA-permitted entities in §§ 99.35(a)(2) and (a)(3).

Changes: We have revised § 99.35(b)(1) so that it uses the term, ''State or local educational authority or agency headed by an official listed in § 99.31(a)(3),'' which is used in §§ 99.35(a)(2) and (a)(3).

Disclosures to Organizations Conducting Studies (§ 99.31(a)(6))

Comment: A few commenters suggested that FERPA's ''for, or on behalf of'' requirement in the studies exception contains a significant limitation. Specifically, these commenters suggested that the exception prohibits FERPA-permitted entities, such as an SEA, from redisclosing PII from education records that they received under one of FERPA's exceptions to the general consent rule,

for, or on behalf of, the original disclosing educational agency or institution, such as an LEA, if the original agency or institution objected to the disclosure. Another commenter asked that we further amend § 99.31(a)(6) to permit disclosures to organizations conducting studies for, on behalf of, or in partnership with, or in the interest of, educational agencies or institutions, as determined by those agencies or institutions.

Discussion: We disagree that the phrase ''for, or on behalf of'' prohibits a disclosure to which the original disclosing educational agency or institution objects. Historically, the Department has viewed the ''for, or on behalf of'' requirement as being based on the unstated premise that some form of agreement by the original disclosing educational agency or institution, such as an LEA or postsecondary institution, was a necessary prerequisite for these types of disclosure. However, it has become necessary for the Department to consider whether its interpretation concerning the ''for, or on behalf of'' language was fully consistent with recently enacted laws.

We have concluded that ''for, or on behalf of'' does not require the assent of or express approval by the original disclosing educational agency or institution. For example, it is not necessary for an SEA to secure the approval of an LEA prior to making disclosures for, or on behalf of the LEA, so long as the SEA is acting with express or implied legal authority and for the benefit of the LEA.

The changes to § 99.31(a)(6)(ii) are necessary to clarify that while FERPA does not confer legal authority on FERPA-permitted entities to enter into agreements and act as representatives of LEAs or postsecondary institutions, nothing in FERPA prevents them from entering into agreements and redisclosing PII from education records related to studies conducted on behalf of LEAs or postsecondary institutions under § 99.31(a)(6), provided that the redisclosure requirements in § 99.33(b) are met. Permissive disclosures of this type may be made notwithstanding the objection of the LEA or postsecondary institution so long as the disclosing FERPA-permitted entity has independent authority to have the study conducted, whether expressly stated or implied, and makes the disclosure on behalf of the LEA or postsecondary institution.

We anticipate that the majority of redisclosures made by FERPA-permitted entities will be made for, or with the approval of, the original disclosing educational agency or institution. Nevertheless, we can reasonably foresee instances in which these FERPA-permitted entities would make redisclosures on behalf of an LEA or postsecondary institution without obtaining its approval.

For instance, an SEA must have the authority to enter into agreements with researchers to conduct studies to improve instruction across LEAs within its own State. Studies such as these can help States save money and improve student outcomes by identifying effective practices and targeting limited resources accordingly, while simultaneously increasing the transparency of taxpayer investments. Therefore, in order to provide greater flexibility to FERPA-permitted entities, we interpret the phrase ''for, or on behalf of'' to recognize both disclosures for the LEA or postsecondary institution that are made with the approval of the LEA or postsecondary institution and disclosures made on behalf of the LEA or postsecondary institution that are made for their benefit in the absence of their approval.

This approach ensures that FERPA-permitted entities have the necessary latitude to fulfill their statutory and regulatory mandates. They may conduct studies of publicly funded education programs while still ensuring that any PII from education records is appropriately protected. FERPA permits disclosure without consent to an organization conducting a study ''for, or on behalf of, educational agencies or institutions'' for statutorily enumerated purposes. 20 U.S.C. 1232g(b)(1)(F). We see no need to deviate from the statutory language in the regulations and agree that § 99.31(a)(6) permits disclosure without consent to organizations conducting studies in partnership with educational agencies or institutions, in which case we would view the study as being ''for'' the educational agencies or institutions. Similarly, as explained earlier in this discussion, we also view § 99.31(a)(6) as permitting disclosure without consent to organizations conducting studies for the benefit of educational agencies or institutions, in which case we would consider the study to be ''on behalf of'' educational agencies or institutions.

However, we disagree with the contention that only an educational agency or institution may make the determination regarding whether a study is for or on its behalf. Rather, FERPA-permitted entities may also make the determination that a study is for the benefit of the original disclosing educational agency or institution. For example, an SEA may conduct a study that compares program outcomes across its LEAs to further assess what programs provide the best instruction and then duplicate those results in other LEAs.

Changes: None.

Comment: None.

Discussion: Upon further review, we decided to remove the proposed requirement in § 99.31(a)(6)(iii)(C)(*4*) and the requirement in § 99.31(a)(6)(ii)(C)(*4*) of the current regulations that permitted an organization conducting a study to return PII from education records to the FERPA-permitted entity, in lieu of destroying such information. We made these changes so that the regulations are more consistent with the statute, which requires the destruction of such information, and to correct an inconsistency in the current and proposed regulations, which required both the destruction of such information and the return or destruction of such information. While returning the information to the originating entity can be a form of destruction so long as the organization conducting the study also properly erases all PII from education records that is maintained in electronic format, returning the information would be insufficient if the PII from education records is continued to be maintained in electronic format by the organization conducting the study.

Changes: We have removed the proposed requirement in § 99.31(a)(6)(iii)(C)(*4*) and the requirement in § 99.31(a)(6)(ii)(C)(*4*) of the current regulations that permitted an organization conducting a study to return PII from education records, in lieu of destroying such information, in order to be more consistent with the statute and to correct an inconsistency in the current and proposed regulations.

Directory Information (§§ 99.3 and 99.37)

Definition of Directory Information (§ 99.3)

Comment: One commenter supported the proposed change to the definition of ''directory information,'' which clarifies that an educational agency or institution may designate and disclose as directory information a student's ID number, or other unique personal identifier that is displayed on a student's ID card or badge, if the identifier cannot be used to gain access to education records, except when used in conjunction with one or more factors that authenticate the student's identity. We also received numerous comments from a variety of parties that expressed support for this change.

One commenter suggested that we remove from the definition of ''directory

information'' the items ''address,'' ''telephone listing,'' and ''date and place of birth,'' noting that the availability of directory information jeopardizes students' right to privacy and makes identity theft easier. Another commenter raised a number of concerns about how directory information might affect a student who is homeless and recommended that a student's address not be included in the definition of ''directory information'' for a student who meets the definition of ''homeless child or youth'' under the McKinney-Vento Homeless Assistance Act. For a number of reasons, the commenter stated that disclosing a homeless student's address would be harmful or an invasion of privacy. A few commenters raised concerns about what they mistakenly thought was an expansion of the definition of ''directory information'' by including any student ID number, user ID, or other unique personal identifier used by a student for purposes of accessing or communicating in electronic systems.

Discussion: We appreciate the support that we received from those parties who agreed with the clarification we proposed to the definition of ''directory information,'' and we regret any confusion caused by including the entire definition in the NPRM. As we explained in the preamble to the NPRM, we proposed to modify the definition of ''directory information'' only to clarify that under § 99.37(c)(2), an educational agency or institution may require students to wear or display ID badges or identity cards that display directory information, even if the parent or the eligible student opted out of directory information. The inclusion of a student ID number or other unique identifier in the definition of ''directory information'' is not new; we made this amendment in 2008. The NPRM merely proposed to establish that the student ID number or other unique identifier that we allowed to be designated as directory information in 2008 could *also* be displayed on a student ID card or badge.

With regard to the concerns about including in the definition of ''directory information'' such items as ''address,'' ''telephone listing,'' and ''date and place of birth,'' we note that these items have been in the FERPA statute since its enactment in 1974, and any change to remove these items would require congressional action. We include these and other items in the regulations, explaining in § 99.37 that an educational agency or institution *may* disclose directory information under certain conditions, including the condition that it notify parents and eligible students of the types of PII from education records it has designated as directory information. If a school has the administrative capacity, it may permit parents or eligible students to opt out of specific items it has designated. However, it has been our understanding that most schools do not have the administrative capacity to permit parents and eligible students to opt out of some, but not all, directory information. Because the disclosure of directory information is permissive, we have advised schools that they can employ an all-or-nothing approach to the disclosure of directory information. That is, a school may provide public notice of the items that it has designated as directory information and permit parents and eligible students to opt out of the disclosure of the items as a whole.

With regard to the comment about not designating an address as ''directory information'' for a student who is homeless, as explained elsewhere, FERPA provides schools with the authority to include or exclude any items within the definition of ''directory information.''

The definition of ''directory information'' in FERPA is generally a guideline for schools to use in designating types of information as directory information. A school is not required to designate all of the types of information given as examples in FERPA as directory information. The decision to designate certain types of information as directory information, such as the student's address, is left to the discretion of the individual educational agency or institution.

We share the concerns raised by commenters that certain directory information items may make identity theft easier in our modern information age. We encourage school officials to be cognizant of this fact and, if feasible, to work hand-in-hand with parents and eligible students in their community to develop a directory information policy that specifically meets their needs and addresses legitimate concerns.

Changes: None.

Student ID Cards and ID Badges (§ 99.37)

Comment: Several commenters expressed support for the proposed amendment in § 99.37(c)(2), which provides that parents and eligible students may not use their right to opt out of directory information disclosures in order to prevent an educational agency or institution from requiring students to wear or otherwise disclose student ID cards or badges that display information that may be directory information. One commenter noted that schools can embed student ID numbers in bar codes or magnetic stripes, as needed, to avoid any privacy conflicts. A student stated that a university should be able to require that students wear ID badges on campus in order to better protect students.

Another commenter recommended that we specify which directory information can be displayed on a student ID card or badge. Some commenters asked if there would be any situations in which a student might be exempted from wearing an ID badge, such as where a student is the victim of stalking at a large postsecondary institution. Another commenter expressed concern that including a student ID number as directory information would have a negative effect on students receiving services under the Individuals with Disabilities Education Act (IDEA) and raised concerns about physical safety and protection from identity theft. The commenter suggested that a student ID number or other unique identifier that may be displayed on a student ID card and is designated as directory information should not be used—even in conjunction with one or more factors that authenticate the user's identity—to gain access to education records. The same commenter supported permitting a school to require a student to wear or publicly display a student ID card or badge that exhibits directory information, as long as the student ID number cannot be used to gain access to education records.

A commenter also suggested that we amend this provision to include other activities for which parents and eligible students cannot opt out, such as participation in education activities that require sign-in access to electronic systems. Specifically, the commenter requested that we add a new requirement stating that a parent or eligible student could not opt out of directory information disclosures to prevent an educational agency or institution from disclosing or requiring a student to disclose the student's name, identifier, or institutional email address in a class in which the student is enrolled. This would include access to instruction, curriculum, courses, or other administrative functions provided online. The commenter stated that the increased use of electronic systems for both instructional and administrative activities dictates that the Secretary not differentiate between these types of activities in which students may opt out. The commenter asked for these changes to ensure that students are not allowed to opt out of participation in various classroom or other instructional activities simply because they have to

sign on to an electronic system. Another commenter asked that we not permit the student's picture to be on the student ID. This commenter also expressed support for permitting parents and eligible students to have the right to opt out of wearing a student ID badge.

Discussion: We appreciate the support we received concerning this proposed change. With regard to the comment that we specify the directory information that can or cannot be displayed on an ID card or badge (*e.g.,* a student's picture), we do not believe this is appropriate or necessary. Rather, we believe that educational agencies and institutions should have the flexibility to make these determinations best suited to their particular situations. Similarly, we do not believe that we should require that information displayed on a student ID card or badge contain only information that cannot be used to gain access to education records. Student ID numbers, user IDs, and any other unique personal identifiers may only be included as directory information if they cannot be used to gain access to education records except when used in conjunction with one or more other factors that authenticate the user's identity.

For the same reasons school administrators need the flexibility to determine what type of information is directory information, they need to have the flexibility to determine what directory information should be included on a student ID card or badge. Smaller schools may know their student population well enough that they may not need to have an ID number or other unique identifier, while larger LEAs, colleges, and universities may need to include more information. As one school official noted, educational agencies and institutions can embed student ID numbers in bar codes or magnetic stripes to address privacy concerns, including identity theft. This practice would also address the apprehension of some commenters that some students may have special reasons for not wearing ID badges, such as special education students, younger children, or students who are the victims of stalking. This amendment to FERPA permits, but does not require, schools to include directory information on student ID cards and badges or to require students to wear or display ID cards and badges.

With regard to the request that we include other activities for which parents and student cannot opt out, such as activities that require sign-in access to electronic systems for instructional and administrative activities, we note that this is outside the scope of the NRPM and, therefore, do not believe it is appropriate to address in these final regulations.

Additionally, in 2008, we expanded the definition of ''directory information'' in § 99.3 of the FERPA regulations to include a student ID number, user ID, or other unique personal identifier used by the student for purposes of accessing or communication in electronic systems, if the identifier could not be used to gain access to education records, except when used in conjunction with one or more factors to authenticate the user's identity. Further, the 2008 regulation changes clarified the definition of ''attendance'' to clarify that students who are not physically present in the classroom may attend an educational agency or institution via videoconference, satellite, Internet, or other electronic information and telecommunications technologies.

In 2008, we also amended § 99.37(c) to state that parents or eligible students may not use their right to opt out of directory information to prevent a school from disclosing, or requiring the disclosure of, a student's name, identifier, or institutional email address in a class in which the student is enrolled. 73 FR 74806 (December 9, 2008). These three provisions are read together to permit directory information to be used to access online electronic systems and to prevent opt-out rights from being used to prevent an educational agency or institution from disclosing or requiring a student to disclose the student's name, identifier, or institutional email address in a class in which the student is attending, in either a traditional or non-traditional classroom setting.

Changes: None.

Limited Directory Information Policy (§ 99.37(d))

Comment: A number of commenters expressed support for the proposal clarifying that an educational agency or institution may have a limited directory information policy. One commenter stated that this clarification will provide educational agencies and institutions with more certainty and control in using directory information for their own purposes. A few commenters stated that it would be helpful if the regulations clarified that institutions can have different policies based on each specific type or subset of directory information, such as being able to institute a policy that only certain directory information may be disclosed to specific parties. Some pointed out that the proposed regulations did not specify whether a school could put into effect a policy that specifically limits who may not receive directory information. Two commenters recommended that the regulations explicitly state that directory information designated by a school may not be disclosed, except for the limited disclosure to specific parties, or for specific purposes, or both.

One commenter supported the amendment to permit schools to have a limited directory information policy, believing this change would help ensure that school officials do not contact landlords, employers, or other third parties to discuss a child's housing situation. One commenter stated that he opposed any changes to the FERPA regulations that would restrict access to directory information. Another commenter said that adopting § 99.37(d) as proposed would add confusion and may raise unnecessary allegations of improper disclosure of directory information from parents and eligible students. This commenter pointed out that there is no requirement in FERPA that a school adopt a directory information policy or disclose directory information even if it has a policy. One commenter expressed concern that the proposed changes to the definition of ''directory information'' do not adequately address the capacity of marketers and other commercial enterprises to obtain, use, and re-sell student information. The commenter stated that few parents are aware, for example, that anyone can request and receive a student directory from a school. The commenter also stated that States may take action, through legislation, to tighten restrictions on the use of directory information, perhaps restricting the disclosure of directory information for marketing purposes.

A few commenters expressed concern that the proposal to permit schools to have a limited directory information policy would prevent the release of information about students to those who have a legitimate reason for obtaining the information, including the media. The commenters also expressed concern that withholding directory information could become a tool for schools to engage in retribution against disfavored media outlets, social or political causes, or parental activist groups. The commenters stated that the Secretary should give detailed guidance to educational agencies and institutions concerning this change in order to diminish any negative effect that such policies could have on the free flow of information to the public. These commenters stated that the effect of the regulatory changes will be that schools will decide not to disclose directory information to the media for any reason,

including publicity or investigations. One of these commenters said that it was not clear how recipients of directory information would be chosen, whether the specific parties would be selected by the institution or by each individual student. This commenter noted that a limited directory information policy might make it difficult for a party that was not included in the policy at the beginning of a year but that needed to do business with the school mid-year to have fair access to directory information.

A commenter stated that the ability to disclose directory information for some purposes, but not others, might prove more useful to educational agencies and institutions that are not subject to a State open records law than to those that are. Educational agencies and institutions that are subject to open records laws would be required to disclose all directory information and would not benefit from a limited directory information policy. The commenter requested clarification whether the ability to limit directory information is optional and whether a failure to institute such a policy would subject the institution to enforcement proceedings by the Department. Similarly, another commenter asked for clarification as to whether a school that chose not to adopt a limited directory information policy may under the proposed regulations still limit the disclosure of directory information to whomever they want, and for whatever reason they want, even though State law may require disclosure.

Finally, a few commenters pointed out that even under a limited directory information policy, it would not be a violation of FERPA for a party that received directory information to redisclose it. To address that issue, some of the commenters supported the idea of a non-disclosure agreement so that the disclosing school could control any redisclosures of directory information. However, one commenter stated that our suggestion in the preamble to the NPRM that schools adopt a non-disclosure agreement is unrealistic; schools may have difficulty identifying who may redisclose the information, and schools have no authority and limited resources to enforce such agreements. This commenter also stated that making recipients sign such agreements could be a significant administrative burden for LEAs that receive many requests for directory information, even if they have adopted a limited directory information policy.

Discussion: Under FERPA, educational agencies and institutions are only required to provide access to education records to parents and eligible students. All other disclosures listed in § 99.31 are optional. This includes the disclosure of directory information under § 99.31(a)(11), under the conditions specified in § 99.37. However, some educational agencies and institutions have advised, and administrative experience has shown, that State open records laws have required disclosure of student directory information because, in most cases, FERPA does not specifically prohibit the disclosure of this information. It is our understanding that many, if not most, State open records or sunshine laws require that public entities, such as public schools, LEAs, and State colleges and universities, disclose information to the public unless the disclosure is specifically prohibited by another State law or by a Federal law such as FERPA. Thus, in practice, while FERPA only requires schools to disclose PII from education records to parents or eligible students, State sunshine laws may require the public release of properly designated directory information from which parents and eligible students have not opted out.

With regard to the commenter who asked whether a school that chooses not to adopt a limited directory information policy could still limit the disclosure of directory information if its State law required the disclosure, FERPA permits the disclosure of directory information but it does not require it. Some States have State open records laws that may require the disclosure of directory information if a school has a directory information policy and the parent or eligible student has not opted out.

We believe that the FERPA regulations will better assist educational agencies and institutions in protecting directory information if an educational agency or institution that adopts a limited directory information policy limits its directory information disclosures only to those parties and purposes that were specified in the policy. To clarify, this regulatory scheme gives each school the option of limiting its directory information disclosures and does not subject a school to enforcement proceedings by FPCO if the school elects not to limit disclosure to specific parties or for specific purposes, or both.

With regard to the recommendations by commenters that the regulations explicitly state that directory information not be disclosed except to specific parties or for specific purposes, we do not believe this change is necessary. As noted, neither the disclosure of directory information nor the adoption of a limited directory information policy is required by the regulations. The regulations make clear that if a school chooses to adopt a limited directory information policy, then it must limit its directory information disclosures to those specified in its public notice.

With regard to concerns expressed by commenters about directory information being released to entities for marketing purposes, a school has the flexibility to allow or restrict disclosure to any potential recipient. For example, a limited directory information policy may be expressed in a negative fashion, indicating that the school does not disclose directory information for marketing purposes. While Congress has not amended FERPA to specifically address disclosure of directory information to companies for marketing purposes, Congress amended section 445 of GEPA, commonly referred to as the Protection of Pupil Rights Amendment (PPRA) in 2001 to address this issue. Public Law 107–110, § 1061.

Under PPRA, LEAs are required to work in consultation with parents to develop and adopt a policy governing the collection, disclosure, or use of personal information collected from students for the purpose of marketing or for selling that information (or otherwise providing that information to others for those purposes). The policy must include arrangements to protect student privacy in the event of such collection, disclosure, or use. LEAs are also required to notify parents of students of any activities that involve the collection, disclosure, or use of personal information collected from students for the purpose of marketing or selling that information (or otherwise providing that information to others for those purposes) so that parents may opt their child out of participation in those activities. 20 U.S.C. 1232h(c)(1)(E) and (c)(2). While PPRA does not generally apply to postsecondary institutions, understanding and complying with its requirements for LEAs should address some of the commenters' concerns about this matter.

With regard to the fact that we did not propose to amend the FERPA regulations to prevent third parties that receive directory information from further disclosing it, we do not believe that it is realistic to make such a change. By its nature, directory information is intended to be publicly shared. Congress included the disclosure of properly designated directory information as an exception to the general consent requirement in FERPA so that schools may make disclosures of the type of information generally not

considered harmful or an invasion of privacy, such as information on students that would normally be found in a school yearbook or directory. It is not administratively practicable to take action against a third party that rediscloses directory information. For example, it would be virtually impossible to control how student information contained in a yearbook is distributed to others. Therefore, we believe that schools are in the best position to determine who should receive directory information and, should they choose, implement a limited directory information policy.

With regard to the commenter who stated that adopting the limited directory information provision in the regulations would add confusion and possibly raise unnecessary allegations of improper disclosure from parents and eligible students, we do not believe this is the case. On the contrary, the option to have a limited directory information policy should better protect against improper disclosures of PII from education records and reduce the number of complaints in this regard.

With regard to our recommendation that schools adopting a limited directory information policy consider entering into non-disclosure agreements to restrict the information from being further disclosed, we agree that this will not always be feasible. Clearly there are situations in which a school could not have a non-disclosure agreement, such as when it publishes directory information in a school yearbook, a sports event program, or a program for a school play. Schools will have to exercise judgment with respect to whether to utilize non-disclosure agreements to prevent further disclosure of directory information by assessing the circumstances surrounding the disclosure of the directory information.

Finally, we note that the regulatory change to allow educational agencies and institutions to implement a limited directory information policy was not specifically intended to address how schools interact with or disclose directory information to members of the media. Rather, we were addressing concerns raised by school officials who, alarmed about the increase in identity theft, expressed a need to protect the privacy of students' directory information. We encourage school officials to act responsibly in developing a limited directory information policy and to keep in mind routine disclosures that schools need to make in the normal course of business, including providing properly designated directory information to the media about various student activities and extracurricular pursuits of students.

Changes: None.

General Enforcement Issue (§ 99.67)

Comment: Several commenters stated that the Department lacks the legal authority to investigate, review, process, or enforce an alleged FERPA violation committed by recipients of Department funds under a program administered by the Secretary that students do not attend. These recipients include but are not limited to, SEAs, nonprofit organizations, student loan lenders, and guaranty agencies. Specifically, the commenters stated that nonprofit organizations, guaranty agencies, and lenders could not be considered educational agencies or institutions under FERPA because these organizations have no students in attendance. In addition, some commenters argued that as financial institutions, student loan lenders, servicers, and guaranty agencies are already subject to numerous Federal laws that require them to protect PII from education records, making them subject to FERPA would not effectively increase protection.

Discussion: The Department disagrees with the comment that it does not have the legal authority to take enforcement actions against entities that receive Department funding under a program administered by the Secretary that students do not attend. Section (f) of FERPA provides that the Department shall take appropriate actions to enforce and deal with violations of provisions in FERPA in accordance with GEPA. 20 U.S.C. 1232g(f). However, as we discussed in the preamble to the NPRM (76 FR at 19733), the current regulations do not clearly describe the entities against which we may take actions under section (f) of FERPA. Accordingly, the Department believes that it is necessary to clarify in these new regulations that FPCO has the authority to hold these entities responsible for FERPA compliance, given the disclosures of PII from education records that are needed to implement SLDS. We believe this clarification is necessary in light of recent developments in the law.

In addition, in order for the Department to appropriately investigate, process, and review complaints and alleged violations of FERPA, the Department proposed in § 99.60(a)(2) to take a more expansive view of the term ''educational agency or institution.'' The expanded definition would include entities that do not necessarily have students in attendance but still receive Department funding under a program administered by the Secretary and which, nevertheless, are in possession and control of PII from education records.

The Department continues to believe that it is necessary to use its broad enforcement powers to ensure that FERPA's protections apply to these recipients. The Department has decided, however, not to define in § 99.60(a)(2) all recipients of Department funding under a program administered by the Secretary as ''educational agencies and institutions'' in the context of the enforcement provisions, as was reflected in proposed § 99.60(a)(2), because it is evident from the comments that the terminology is confusing. We have decided instead to revise §§ 99.61 through 99.67, which set out FERPA's enforcement procedures. These amendments authorize the Department to investigate, process, and review complaints and violations of FERPA alleged to have been committed by educational agencies and institutions, as well as other recipients of Department funds under any program administered by the Secretary (*e.g.,* State educational authorities, such as SEAs, and State postsecondary agencies, local educational authorities, nonprofit organizations, student loan guaranty agencies, and student loan lenders). Because these entities receive PII from education records, we believe that this change is justified in order to protect against improper redisclosure of PII from education records.

In the case of an improper redisclosure of PII from education records by a non-profit organization, lender, servicer, or guaranty agency that is a recipient of Department funds under a program administered by the Secretary and that received PII from education records from an institution of higher education, the Department will enforce sanctions against the responsible party, whether that be the non-profit organization, lender, servicer, or guaranty agency. The Department, however, may also pursue enforcement measures against the institution of higher education, depending on the circumstances. In addition, we are not convinced that other confidentiality laws that apply to financial institutions provide the same protections as FERPA. Although the confidentiality laws cited by the commenters address privacy generally, they are not specifically designed to protect the confidentiality of student education records. Moreover, while the Secretary can take steps to enforce FERPA directly, we may need to rely on other Federal and State agencies to enforce these other confidentiality laws identified by the commenters.

Changes: The Department has decided not to adopt the change proposed in § 99.60(a)(2), which would have provided, solely for purposes of enforcement of FERPA under 34 CFR part 99, subpart E, all recipients of Department funds under a program administered by the Secretary as ''educational agencies and institutions.'' Rather, the Department has decided to amend §§ 99.61 through 99.67 to clarify FPCO's enforcement responsibilities. Specifically, we revised these sections to clarify that FPCO may investigate, review, and process complaints filed against, or alleged violations of FERPA committed by, any recipient of Department funds under a program administered by the Secretary—not just educational agencies and institutions—and may hold any such recipient accountable for compliance with FERPA.

Comment: One commenter asked that we clarify which enforcement tools legally available to the Secretary would be utilized in actions against State and local educational authorities and other recipients of Department funding under a program administered by the Secretary.

Four commenters requested that the Department adopt more significant penalties, including incarceration and substantial fines, for FERPA violations caused by authorized representatives. Another commenter stated that the Department should sanction an entity that makes an unauthorized disclosure by requiring the entity to surrender all PII from education records already in its possession. Several commenters stated that other privacy statutes include significant sanctions and that FERPA requires a similar deterrent to prevent violations of student privacy.

Discussion: In FERPA, Congress expressly directed the Secretary to ''take appropriate actions'' to ''enforce'' FERPA and ''to deal with violations'' of its terms ''in accordance with [GEPA].'' 20 U.S.C. 1232g(f).

In GEPA, Congress provided the Secretary with the authority and discretion to take enforcement actions against any recipient of funds under any program administered by the Secretary for failures to comply substantially with any requirement of applicable law, including FERPA. 20 U.S.C. 1234c(a). GEPA's enforcement methods expressly permit the Secretary to issue a complaint to compel compliance through a cease and desist order, to recover funds improperly spent, to withhold further payments, to enter into a compliance agreement, or to ''take any other action authorized by law,'' including suing for enforcement of FERPA's requirements. 20 U.S.C. 1234a, 1234c(a), 1234d; 1234e; 1234f; 34 CFR 99.67(a); *see also United States* v. *Miami Univ.,* 294 F.3d 797 (6th Cir. 2002) (affirming the district court's decision that the United States may bring suit to enforce FERPA). Therefore, the Secretary will use one or a combination of these enforcement tools as is appropriate given the circumstances. Additionally, the Department has the authority to impose the five-year rule against any entity that FPCO determines has violated FERPA either through an improper redisclosure of PII from education records or through its failure to destroy PII from education records under the studies exception. (See discussion of five-year rule later in this preamble).

With respect to the suggestion that we create additional penalties, the Department lacks the statutory authority to incarcerate violators, impose fines, or force a third party to surrender all PII from education records currently in its possession because the Department lacks the statutory authority to do so.

Changes: None.

Comment: One commenter requested that the Department clarify that ''non-school entities'' are only required to comply with FERPA to the extent they have received FERPA-protected PII from education records from an educational agency or institution.

Discussion: The Department would only take actions against ''non-school entities'' that have not complied with FERPA requirements that relate to PII from education records they received under one of the exceptions to FERPA's general consent requirement. The Department has no authority under FERPA to take actions for other PII these entities may possess.

Changes: None.

Comment: A commenter suggested that other parties beyond those enumerated in the statute (*i.e.,* eligible parents and students) should have standing to file complaints with FPCO. Further, this commenter suggested that the Department should increase the amount of time a complainant has to file a complaint with FPCO.

Discussion: We decline to expand the entities eligible to file complaints with FPCO beyond parents and eligible students and decline to increase the amount of time a complainant has to file a complaint with FPCO beyond 180 days of the date of the alleged violation (or of the date that the complainant knew or reasonably should have known of the alleged violation). We did not propose these changes in the NPRM and therefore cannot make these changes in these final regulations without allowing an opportunity for further public comment and review. Still, it is important to note that FPCO can initiate an investigation on its own, without receiving a complaint, to address other violations.

Changes: None.

Comment: One commenter asked us to consider expanding the scope of our enforcement procedures to apply to tax exempt organizations under 26 U.S.C. 501(c) that students do not attend and that are not the recipients of Department funds but that have PII from education records.

Discussion: If a tax exempt organization under 26 U.S.C. 501(c) has PII from education records, but is not a recipient of funds under a program administered by the Secretary, then the Department would not have the authority under GEPA to take enforcement measures against such an organization. FPCO, however, may impose, under 20 U.S.C. 1232g(b)(4)(B) and new § 99.67(c), (d), and (e), the five-year rule against any entity that FPCO determines has violated FERPA either through an improper redisclosure of PII from education records received under any of the exceptions to the general consent rule or through the failure to destroy PII from education records under the studies exception. (See discussion of five-year rule later in this preamble.)

For instance, if an LEA's authorized representative does not receive funding from the Department and violates FERPA due to poor data security practices, FPCO could apply the five-year rule by prohibiting the disclosing LEA from providing PII from education records to the authorized representative for at least five years. If the disclosing LEA refuses to comply and continues its relationship with the authorized representative, FPCO could, under GEPA, terminate funding to the LEA.

Changes: None.

Comment: One commenter asked that we clarify how the enforcement measures would apply if a contractor of an entity that received funding under a program administered by the Department violated FERPA's requirements. The commenter wanted to know, for example, what the liability of a school would be if its contractor violated FERPA.

Discussion: Whether the Department would take enforcement action against a contractor that violates FERPA under a program administered by the Secretary, depends upon the exception to FERPA under which the contractor received the PII from education records, if the contractor was a recipient of Department funds, and the

circumstances of the violation. If the contractor was a recipient of Department funds and violated FERPA, the Department could take sanctions as permissible under GEPA. If the contractor was not a recipient of Department funds and improperly disclosed PII from education records received under any of the exceptions to the general consent rule or failed to destroy PII from education records in accordance with the requirements of the studies exception, the Department could implement the five-year rule. (See discussion of the five-year rule later in this preamble.)

Likewise, the Department may also take enforcement action against the entity that disclosed PII from education records to the contractor. For example, if the contractor was acting as an authorized representative of a FERPA-permitted entity and violated FERPA, FPCO would investigate and review whether the disclosing entity met all of its obligations under FERPA, such as taking reasonable methods to ensure to the greatest extent practicable the FERPA compliance of the contractor. FPCO could take applicable GEPA enforcement actions against the disclosing entity, if it did not meet its responsibilities.

If the contractor received PII from education records while acting as a school official under § 99.31(a)(1)(i)(B), then the educational agency or institution would be liable for the contractor's FERPA violation and is subject to GEPA enforcement actions by the Department. In any of these instances, FPCO would initiate an investigation and seek voluntary compliance before imposing any sanctions.

Changes: None.

Five-Year Rule (§ 99.67)

Comments: Many commenters raised questions about the provision in FERPA that prohibits an educational agency or institution from disclosing PII from education records to a third party ''for a period of not less than five years'' if that third party improperly redisclosures PII from education records received under any of the exceptions to the general consent rule or fails to destroy PII from education records under the studies exception. 20 U.S.C. 1232g(b)(4)(B).

Multiple commenters appeared to believe that the Department was proposing the five-year rule for the first time in the NPRM and questioned whether the Department had the legal authority to implement such a rule. One commenter specifically opposed the rule on the grounds that it was inconsistent with the statute and that changes in the law should be made through a legislative amendment and not rulemaking.

Discussion: To clarify, the Department did not propose the five-year rule for the first time in the NPRM; rather, Congress amended FERPA in the Improving America's Schools Act of 1994, § 249, Public Law 103–382, to provide that if a ''third party outside the educational agency or institution'' improperly redisclosures FERPA-protected data that it received under any of the exceptions to the general consent rule or fails to destroy information under the studies exception, then the educational agency or institution ''shall be prohibited from permitting access to information * * * to that third party for a period of not less than five years.'' 20 U.S.C. 1232g(b)(4)(B).

The Department amended its regulations to implement this statutory change in 1996. 61 FR 59292 (November 21, 1996). The Department's current regulations in § 99.31(a)(6)(iv) and § 99.33(e), taken together, provide that if FPCO determines that a third party outside the educational agency or institution improperly redisclosures PII from education records in violation of § 99.33 or fails to destroy PII from education records in violation of § 99.31(a)(6)(ii)(B), then the educational agency or institution may not provide that third party access for a minimum period of five years.

Still, based upon the confusion expressed by commenters regarding the five-year rule, we are changing the final regulations to consolidate all regulatory provisions relating to the five-year rule into one section of the regulations, § 99.67. This is not a substantive change, but it is one intended to improve comprehension and promote ease of use because we believe it will be helpful for readers to see all of the regulatory language concerning the five-year rule in a single regulatory section.

Changes: We are removing the existing two provisions in § 99.31(a)(6)(iv) and § 99.33(e) regarding the five-year rule and consolidating all provisions relating to the five-year rule into § 99.67.

In addition, we are changing the language that we proposed in § 99.35(d) that stated that in the event that FPCO finds an improper re-disclosure of PII from education records, ''* * * the educational agency or institution from which the [PII] originated may not allow the authorized representative, or the State or local educational authority or the agency headed by an official listed in § 99.31(a)(3), or both, access to [PII] from education records for at least five years.'' 65 FR 19738 (April 8, 2011). Specifically, we are replacing ''authorized representative, or the State or local educational authority or the agency headed by an official'' in proposed § 99.35(d) with ''the third party'' in the final regulation. Similarly, we are also consolidating the text of proposed § 99.35(d) into § 99.67, the enforcement section.

Comment: Many commenters asked which entities were subject to the five-year rule. Some of these commenters expressed concern that the rule would be enforced against an entire educational agency or institution acting as a third party, such as a State university system, and asked whether the rule could be applied in a more limited manner against an individual researcher or department within the educational agency or institution, arguing, for example, that if an individual researcher is at fault, it would be excessive to prohibit an entire organization from receiving PII from education records for a period of not less than five years.

At the same time, others were equally emphatic that the rule must apply to the entire educational agency or institution acting as a third party to have any enforcement effect or to deter potential violations. Consequently, many of these commenters asked how the Department would define an educational agency or institution acting as a third party.

One commenter recommended that the five-year rule only be applied against an educational agency or institution acting as a third party that was expressly responsible for the unauthorized redisclosure of PII from education records. Another commenter wanted the Department to clarify whether FERPA-permitted entities could be subjected to the five-year rule due to an unauthorized redisclosure of PII from education records made by the FERPA-permitted entity's authorized representative.

Discussion: The statute and current §§ 99.31(a)(6)(iv) and 99.33(e), taken together, are clear that any third party outside of the educational agency or institution that improperly redisclosures PII from education records received under any of the exceptions to the general consent rule or fails to destroy PII from education records as required under current § 99.31(a)(6)(ii)(B) may be subjected to the five-year rule. We understand a ''third party'' to refer broadly to any entity outside of the educational agency or institution from which the PII from education records was originally disclosed and may include an authorized representative. In other words, authorized representatives

make up a subset of the larger set of third parties outside the educational agency or institution from which the PII from education records was originally disclosed. Any individual or entity to which PII from education records is disclosed without consent by an educational agency or institution under § 99.31(a), except for disclosures under § 99.31(a)(1) to school officials because they are within the educational institution or agency, is a third party.

The NPRM proposed adding a third regulatory provision to § 99.35 in order to implement the five-year rule more specifically in the context of an improper redisclosure of PII from education records by FERPA-permitted entities or by their authorized representatives (which are third parties). As explained in the NPRM, the Department sought to clarify that FPCO could impose the five-year rule against FERPA-permitted entities, their authorized representatives, or both. Under the final regulations, the provisions of the five-year rule apply to all improper redisclosures by third parties outside of the educational agency or institution from which PII from education records was originally disclosed. These third parties include FERPA-permitted entities or their authorized representatives, whether they obtained PII from education records under the studies exception, the audit or evaluation exception, or any other exception to the requirement of consent in § 99.31(a) (other than § 99.31(a)(1), which applies to disclosures to school officials who are within the educational institution or agency).

The five-year rule also applies to all third parties that fail to destroy PII from education records in violation of the studies exception in § 99.31(a)(6). By contrast, the statute does not specifically authorize the Department to apply the rule against a third party for failure to destroy PII from education records under the audit or evaluation exception or for other inappropriate activities that affect privacy beyond the improper redisclosure and the failure to destroy PII from education records in violation of the studies exception in § 99.31(a)(6), as discussed earlier. However, FERPA-permitted entities are free to include sanctions for other inappropriate activities that affect privacy as part of their written agreements with third parties and authorized representatives.

Changes: None.

Comment: Many commenters requested clarification regarding how the five-year rule would be implemented and specifically requested a detailed explanation regarding who could enforce the rule, how the rule would be applied, and whether those sanctioned would have a right to appeal. Several commenters asked how much discretion educational agencies and institutions would have to either bar third parties or authorized representatives under the five-year rule or to modify the length of the debarment depending upon the circumstances.

Several commenters asked how much discretion the Department would have when applying the five-year rule. Some expressed concern that the Department would apply the five-year rule automatically after a single unauthorized redisclosure of PII from education records by a third party. One commenter expressed concern that the Department would apply the rule like a ''zero tolerance'' policy.

Concerned about the severity of the five-year rule, many commenters requested an opportunity to come into compliance with approved best practices and methods for data protection as an alternative to an immediate application of the five-year rule. One commenter suggested remediation as an alternative to the five-year rule to help a third party with the process of voluntary compliance.

Another commenter asked the Department to amend the regulations to apply the five-year rule only when there are repeated, unauthorized redisclosures of PII from education records or when the parties responsible for the unauthorized disclosure are grossly negligent. Some of these commenters suggested that we take into account the level or magnitude of the improper redisclosure. One commenter suggested that the regulations should be modified to recognize that in today's technological environment, it is not feasible to require absolute compliance.

Finally, a few commenters asked whether debarment under the five-year rule ''follows'' an individual who has been debarred from one employer to the individual's next employer. These commenters also asked whether debarment attaches to a third party even if the individual who is found to be responsible for an improper redisclosure of PII from education records leaves the employment of that third party.

Discussion: Some commenters appeared to have misunderstood the NPRM as proposing that an individual school or LEA would have the authority to impose the five-year rule against a third party, such as an SEA or a Federal agency headed by an official listed in § 99.31(a)(3), in the event of an improper redisclosure by that third party. This is incorrect—only FPCO has the authority to impose the five-year rule against third parties that FPCO determines have violated either the redisclosure provisions of § 99.33 or the destruction requirements of § 99.31(a)(6)(iii)(B). In other words, only FPCO has the authority to implement the five-year rule to prohibit an educational agency or institution from providing a third party with access to FERPA-protected data.

When making such a determination, FPCO, consistent with its longstanding practice, will investigate allegations of third parties improperly redisclosing PII from education records under § 99.33 or failing to destroy data under § 99.31(a)(6)(iii)(B). If FPCO were to find a FERPA violation, then it would first attempt to bring the offending third party into voluntary compliance. As suggested by one commenter, FPCO may use remediation as a tool to bring the third party into voluntary compliance. For instance, if FPCO were to investigate and determine that a third party had failed to timely destroy data, FPCO could work with the third party conducting the study to implement an appropriate destruction policy. If FPCO were unable to bring the offending third party into voluntary compliance, then FPCO would have the discretion to prohibit the educational agency or institution from allowing that third party access to PII from education records for a period of at least five years. In deciding whether to exercise this discretion and which third parties should be banned, FPCO will consider the nature of the violation and the attendant circumstances. One factor FPCO will consider is whether the third party has repeatedly redisclosed PII from education records improperly, which will make it more likely that the FPCO will apply the five-year rule. The Department believes that outlining this detailed process here provides adequate clarification of FPCO's enforcement procedures.

Moreover, as discussed in more detail earlier in this preamble, FPCO is not limited to the five-year rule in the enforcement actions it may take; it also has the discretion to consider whether it would be more appropriate to apply GEPA enforcement mechanisms against those third parties receiving Department funds. Accordingly, the five-year rule is not a ''zero tolerance'' policy, as suggested by one commenter, and FPCO would not apply the rule without considering the facts of each particular situation, as some commenters feared.

As for whether a third party would be able to appeal a decision made by FPCO to prohibit an educational agency or institution from disclosing PII from

education records to that third party, no such appeal right exists. Under current § 99.60(b)(1), only FPCO has the authority to ''[i]nvestigate, process, and review complaints and violations under the Act * * *.'' FPCO also retains complete authority to enforce the five-year rule, and its decisions are final. However, FPCO's investigative process would provide ample opportunity for the party being investigated to have FPCO consider all relevant facts and circumstances before making a decision.

Importantly, the fact that FPCO must find a violation before the five-year rule may be enforced does not relieve educational agencies and institutions or FERPA-permitted entities of their responsibility to protect PII from education records. As discussed earlier, we encourage FERPA-permitted entities that are redisclosing PII from education records to third parties to include sanctions in their written agreements with their third parties and authorized representatives, and to enforce those sanctions. FERPA-permitted entities, and their authorized representatives, may agree to any sanctions permissible under applicable law. For instance, written agreements could call for monetary penalties, data bans of varying length, or any of the range of civil penalties that the disclosing entity believes is appropriate. The Department encourages the use of these agreed-upon sanctions to ensure control and proper use of PII from education records.

Finally, depending upon the specific facts of the situation, debarment may ''follow'' an individual who has been sanctioned under the five-year rule from one employer to another. Further, debarment would likely not remain attached to a third party if it is determined that only the debarred individual was responsible for the improper redisclosure of PII from education records, the debarred individual leaves the third party's employment, and the improper redisclosure was not caused by a policy of the third party. It is important to note, however, that such determinations are highly fact specific and the Department will review each situation case by case.

Changes: We are amending §§ 99.61, 99.62, 99.64, 99.65, 99.66 and 99.67 of the FERPA regulations. These changes provide more detailed procedures governing the investigation, processing, and review of complaints and violations against third parties outside of an educational agency or institution for failing to destroy PII from education records in violation of § 99.31(a)(6)(iii)(B) or for improperly redisclosing PII from education records in violation of § 99.33.

Comment: Several commenters provided general support for the five-year rule as a means to enforce FERPA. One commenter stated that five years is an appropriate time period for such a violation, and another stated that substantial consequences are a must and that debarment would be an appropriate remedy for FERPA violations.

Other commenters found this sanction insufficient to adequately protect privacy and called for more extensive and harsher penalties. One commenter requested that other penalties be developed out of a concern that the five-year rule would not be used frequently enough to deter egregious and flagrant violations of FERPA. Several commenters requested that the Department apply the rule more broadly. For example, one commenter stated that the Department should sanction other inappropriate activities that affect privacy besides improper redisclosures, including, but not limited to, ''using records for an improper purpose; examining individual records without justification * * * and not allowing access to or correction of records when appropriate.''

Still others expressed concern that the Department would apply the five-year rule too broadly. One commenter suggested limiting the scope of the prohibition to PII from education records used for the purposes of conducting studies and not necessarily for other purposes related to the provision of products, services, and other functions.

Discussion: The Department lacks the legal authority to expand the enforcement mechanisms available under FERPA beyond those discussed in this preamble and therefore declines to include harsher penalties such as those requested by a number of commenters. For the same reason, we cannot expand the list of ''inappropriate activities'' that may be sanctioned under the five-year rule beyond improper redisclosures under § 99.33 and the failure to destroy PII in violation of § 99.31(a)(6)(iii)(B). The five-year rule is clear that it only applies to improper redisclosures of PII received under any of the exceptions to the general consent rule and the failure to destroy PII from education records under the studies exception.

The Department also declines to limit the scope of the prohibition to the purpose of conducting studies and not necessarily for other purposes related to the provision of products, services, and other functions. Section (b)(4)(B) of FERPA (20 U.S.C. 1232g(b)(4)(B)) provides that the five-year rule applies to any improper redisclosure made by any third party and not just to an improper redisclosure made by a third party conducting research under the studies exception. Thus, the final regulations include a third regulatory provision, reflected in § 99.67(d), that describes the five-year rule as it applies specifically in the context of the audit or evaluation exception. Section 99.67 states that in the context of the audit or evaluation exception, where the FERPA-permitted entities and any of their authorized representatives are third parties, the five-year rule could be applied against the FERPA-permitted entities, an authorized representative thereof, or both.

Changes: None.

Comment: Another commenter requested that the regulations be changed to prohibit the offending third party from requesting PII from education records from the disclosing educational agency or institution in the future rather than placing the burden on the educational agency or institution to deny access.

Discussion: The Department cannot prohibit a third party who has violated FERPA from requesting PII from education records from an educational agency or institution. The five-year rule clearly states that it is the duty of the educational agency or institution that originally disclosed the PII from education records to the third party to prevent further disclosure to the same third party. Still, the five-year rule does not prohibit all educational agencies and institutions from disclosing PII from education records to the offending third party; as made clear by the statute, the prohibition only applies to the educational agency or institution that originally disclosed PII from education records to that third party.

Changes: None.

Comments: Some expressed concern that under the five-year rule, educational agencies and institutions, such as LEAs, would be prohibited from disclosing PII from education records to third parties, such as SEAs, if these third parties improperly redisclosed FERPA-protected data that they received from the educational agency or institution. The commenters expressed concern that Federal and State education laws require LEAs to share data with SEAs in order to qualify for Federal and State education funds.

Another commenter expressed a similar concern that an institution of higher education might be prohibited from offering Federal financial aid to its students if the Department itself were responsible for the improper redisclosure. In the commenter's example, the institution of higher education would be unable to make data

disclosures needed to process Federal and State loans, if the five-year rule were applied to the Department.

Discussion: The Department would interpret the five-year rule consistently with other Federal laws to the greatest extent possible in order to avoid a conflict between Federal laws. If imposition of the five-year rule would prevent an LEA from complying with other legal requirements, FPCO may sanction the offending SEA using an enforcement mechanism that is available to the Department under GEPA, such as issuing a cease and desist order, thereby allowing the LEA to meet its other legal obligations.

Similarly, in response to those commenters who expressed a concern that subjecting the Department to the five-year rule would prevent institutions of higher education from providing student information to the Department's Federal Student Aid (FSA) office, the Department will administer FERPA in a reasonable manner and read it consistently with Federal laws governing student financial aid. Like any other third party outside of an educational agency or institution, FSA, or any other office in the Department that receives PII from education records, must also comply with FERPA; if FPCO found that FSA, or any other third party, violated the redisclosure provisions in FERPA, FPCO would then work with that third party to obtain voluntary compliance with FERPA, potentially eliminating the need to impose the five-year ban.

Changes: None.

Comment: One commenter expressed concern about existing contracts and written agreements being violated because of an application of the five-year rule regarding a separate and unrelated improper redisclosure of PII from education records by an authorized representative.

Discussion: The Department disagrees that application of the five-year rule will automatically result in a debarred third party from complying with its obligations under other pre-existing contracts or written agreements. If FPCO were to find that application of the rule was warranted, the regulations would prohibit only the original, disclosing educational agency or institution from providing PII from education records to the third party. Furthermore, this prohibition would only occur if the third party refused to work with FPCO to voluntarily comply with FERPA.

Changes: None.

Comment: Two commenters noted what they perceived to be a conflict between the language used in the statute (and the preamble of the NPRM) regarding the five-year rule and the language in current regulations. Although the statute states that the original, disclosing educational agency or institution ''shall be prohibited'' from permitting an offending third party to access PII from education records for at least five years, the regulations state that the disclosing educational agency or institution ''may not'' allow the third party access to PII from education records. One commenter preferred to use the terms ''may not'' instead of ''shall be prohibited'' because ''may not'' suggested greater flexibility in how the five-year rule would be applied.

Discussion: We disagree that a conflict exists between the language contained in the statute and current regulations regarding the five-year rule. Specifically, we consider the terms used in the regulations (''may not'' allow access) to have the same meaning as the language used in the statute (''shall be prohibited'' from permitting access).

Changes: None.

Executive Order 12866 and 13563

Regulatory Impact Analysis

Under Executive Order 12866, the Secretary must determine whether the regulatory action is ''significant'' and therefore subject to the requirements of the Executive Order and subject to review by OMB. Section 3(f) of Executive Order 12866 defines a ''significant regulatory action'' as an action likely to result in regulations that may (1) have an annual effect on the economy of $100 million or more, or adversely affect a sector of the economy, productivity, competition, jobs, the environment, public health or safety, or State, local or tribal governments or communities in a material way (also referred to as ''economically significant'' regulations); (2) create serious inconsistency or otherwise interfere with an action taken or planned by another agency; (3) materially alter the budgetary impacts of entitlement grants, user fees, or loan programs or the rights and obligations of recipients thereof; or (4) raise novel legal or policy issues arising out of legal mandates, the President's priorities, or the principles set forth in the Executive order.

Pursuant to the terms of the Executive Order, we have determined this regulatory action is significant and subject to OMB review under section 3(f)(4) of Executive Order 12866. Notwithstanding this determination, we have assessed the potential costs and benefits—both quantitative and qualitative—of this regulatory action. The Department believes that the benefits justify the costs.

The Department has also reviewed these regulations pursuant to Executive Order 13563, published on January 21, 2011 (76 FR 3821). Executive Order 13563 is supplemental to and explicitly reaffirms the principles, structures, and definitions governing regulatory review established in Executive Order 12866. To the extent permitted by law, agencies are required by Executive Order 13563 to: (1) Propose or adopt regulations only upon a reasoned determination that their benefits justify their costs (recognizing that some benefits and costs are difficult to quantify); (2) tailor their regulations to impose the least burden on society, consistent with obtaining regulatory objectives, taking into account, among other things, and to the extent practicable, the costs of cumulative regulations; (3) select, in choosing among alternative regulatory approaches, those approaches that maximize net benefits (including potential economic, environmental, public health and safety, and other advantages; distributive impacts; and equity); (4) specify, to the extent feasible, performance objectives, rather than specifying the behavior or manner of compliance that regulated entities must adopt; and (5) identify and assess available alternatives to direct regulation, including providing economic incentives to encourage the desired behavior, such as user fees or marketable permits, or providing information upon which choices can be made by the public.

We emphasize as well that Executive Order 13563 requires agencies ''to use the best available techniques to quantify anticipated present and future benefits and costs as accurately as possible.'' In its February 2, 2011, memorandum (M–11–10) on Executive Order 13563, improving regulation and regulatory review, the Office of Information and Regulatory Affairs in OMB has emphasized that such techniques may include ''identifying changing future compliance costs that might result from technological innovation or anticipated behavioral changes.''

We are issuing these regulations only upon a reasoned determination that their benefits justify their costs, and we selected, in choosing among alternative regulatory approaches, those approaches that maximize net benefits. Based on the following analysis, the Department believes that these final regulations are consistent with the principles in Executive Order 13563.

We also have determined that this regulatory action would not unduly interfere with State, local, and tribal governments in the exercise of their governmental functions.

Potential Costs and Benefits

Following is an analysis of the costs and benefits of the changes reflected in these final FERPA regulations. These changes facilitate the disclosure, without written consent, of PII from education records for the purposes of auditing or evaluating Federal- or State-supported education programs and enforcing or ensuring compliance with Federal legal requirements related to these programs. In conducting this analysis, the Department examined the extent to which the changes add to or reduce the costs of educational agencies, other agencies, and institutions in complying with the FERPA regulations prior to these changes, and the extent to which the changes are likely to provide educational benefit. Allowing data-sharing across agencies, because it increases the number of individuals who have access to PII from education records, may increase the risk of unauthorized disclosure of PII from education records. However, we do not believe that the staff in the additional agencies who will have access to PII from education records are any more likely to violate FERPA than existing users, and the strengthened accountability and enforcement mechanisms reflected in these regulations will help to ensure better compliance overall. While there will be administrative costs associated with implementing data-sharing protocols that ensure that PII from education records is disclosed in accordance with the limitations in FERPA, we believe that the relatively minimal administrative costs of establishing these protocols will be off-set by potential analytic benefits. Based on this analysis, the Secretary has concluded that the amendments reflected in these final regulations will result in savings to entities and have the potential to benefit the Nation by improving capacity to conduct analyses that will provide information needed to improve education.

Authorized Representative

These regulations amend § 99.3 by adding a definition of the term ''authorized representative;'' an authorized representative is any individual or entity designated by a State or local educational authority or a Federal agency headed by the Secretary, the Comptroller General, or the Attorney General to carry out audits, evaluations, or enforcement or compliance activities relating to education programs. FERPA permits educational authorities to provide to authorized representatives PII from education records for the purposes of conducting audits, evaluations, or enforcement and compliance activities relating to Federal- and State-supported education programs. However, in the past, we had not defined the term ''authorized representative'' in our regulations. The Department's position had been that educational authorities may only disclose education records to entities over which they have direct control, such as an employee or a contractor. Therefore, under the Department's interpretation of its regulations, SEAs were not able to disclose PII from education records to many State agencies, even for the purpose of evaluating education programs under the purview of the SEAs. For example, an SEA or LEA could not disclose PII from education records to a State employment agency for the purpose of obtaining data on post-school outcomes such as employment for its former students. Thus, if an SEA or LEA wanted to match education records with State employment records for purposes of evaluating its secondary education programs, it would have to import the entire workforce database and do the match itself (or contract with a third party to do the same analysis). Similarly, if a State workforce agency wanted to use PII from education records maintained by the SEA in its SLDS, in combination with data it had on employment outcomes, to evaluate secondary vocational education programs, it would not be able to obtain PII from the education records in the SEA's SLDS to conduct the analyses. It would have to provide the workforce data to the SEA so that the SEA could conduct the analyses or to a third party (*e.g.,* an entity under the direct control of the SEA) to construct the needed longitudinal administrative data systems. While feasible, these strategies force agencies to outsource their analyses to other agencies or entities, adding administrative cost, burden, and complexity. Moreover, preventing agencies from using PII from education records directly for conducting their own analytical work increases the likelihood that the work will not meet their expectations or get done at all. Finally, the previous interpretation of the current regulations exposed greater amounts of PII from education records to risk of disclosure as a result of greater quantities of PII from education records moving across organizations (*e.g.,* the entire workforce database) than would be the case with a more targeted data request (*e.g.,* disclosure of PII from education records for graduates from a given year who appear in the workforce database). These final regulations allow FERPA-permitted entities to disclose PII from education records without consent to authorized representatives, which may include other State agencies, or to house data in a common State data system, such as a data warehouse administered by a central State authority for the purposes of conducting audits or evaluations of Federal- or State-supported education programs, or for enforcement of and ensuring compliance with Federal legal requirements relating to Federal- and State-supported education programs (consistent with FERPA and other Federal and State confidentiality and privacy provisions).

The Department also amends § 99.35 to require that FERPA-permitted entities use written agreements with an authorized representative (other than employees) when they agree to disclose PII from education records without consent to the authorized representative under the audit or evaluation exception. The cost of entering into such agreements should be minimal in relation to the benefits of being able to disclose this information. Section § 99.35(a)(3) requires that the written agreement specify that the information is being disclosed for the purpose of carrying out an allowable audit, evaluation, or enforcement or compliance activity, as well as a description of the activity and how the disclosed information is to be used.

Education Program

The final regulations amend § 99.3 by adding a definition for the term ''education program.'' This definition clarifies that an education program can include a program administered by a non-educational agency (*e.g.,* an early childhood program administered by a human services agency or a career and technical education program administered by a workforce or labor agency) and any program administered by an educational agency or institution. These final regulations also define the term ''early childhood education program,'' because that term is used in the definition of ''education program.'' For the definition of the ''early education program,'' we use the definition of that term from HEA.

These definitions, in combination with the addition of the definition of the term ''authorized representative,'' results in a regulatory framework for FERPA that allows non-educational agencies to have easier access to PII in student education records that they can use to evaluate the education programs they administer. For example, these changes permit disclosures of PII in

elementary and secondary school education records without consent to a non-educational agency that is administering an early childhood education program in order to evaluate the impact of its early childhood education program on its students' long-term educational outcomes. The potential benefits of these regulatory changes are substantial, including the benefits of non-educational agencies that are administering education programs, as that term is defined in these regulations, being able to conduct their own analyses without incurring the prohibitive costs of obtaining consent for access to individual students' PII from education records.

Research Studies

Section (b)(1)(F) of FERPA permits educational agencies and institutions to disclose PII from education records without consent to organizations conducting research studies for, or on behalf of, educational agencies or institutions from which the PII from education records originated, for statutorily-specified purposes. The amendment to § 99.31(a)(6) permits any of the authorities listed in § 99.31(a)(3), including SEAs, to enter into written agreements that provide for the disclosure of PII from education records to research organizations for studies that would benefit the educational agencies or institutions that disclosed the PII to the SEA or other educational authorities. The preamble to the final FERPA regulations published in the **Federal Register** on December 9, 2008 (73 FR 74806, 74826) took the position that an SEA, for example, could not redisclose PII from education records that it obtained from an LEA to a research organization unless the SEA had separate legal authority to act for, or on behalf of, the LEA (or other educational institution. Because, in practice, this authority may not be explicit in all States, we are amending § 99.31 to specifically allow State educational authorities, which include SEAs, to enter into agreements with research organizations for studies that are for one or more of the enumerated purposes under FERPA, such as studies to improve instruction (see § 99.31(a)(6)(ii)). The Department believes that this regulatory change will be beneficial because it will reduce the administrative costs of, and reduce the barriers to, using PII from education records, including PII from education records in SLDS, in order to conduct studies to improve instruction in education programs.

Authority To Evaluate

Current § 99.35(a)(2) provides that the authority for a FERPA-permitted entity to conduct an audit, evaluation, or enforcement or compliance activity must be established under a Federal, State, or local authority other than FERPA. Lack of such explicit State or local authority has hindered the use of PII from education records in some States. These final regulations remove this language about legal authority because we believe that the language unnecessarily caused confusion in the field. This is because FERPA does not require that a State or local educational authority have express legal authority to conduct audits, evaluations, or compliance or enforcement activities. Rather, we believe FERPA permits disclosure of PII from education records to a State or local educational authority if that entity also has implied authority to conduct audit, evaluation, or enforcement or compliance activities with respect to its own programs.

This regulatory change also allows an SEA to receive PII from education records originating at postsecondary institutions as needed to evaluate its own programs and determine whether its schools are adequately preparing students for higher education. The preamble to the final FERPA regulations published in the **Federal Register** on December 9, 2008 (73 FR 74806, 74822) suggested that PII in education records maintained by postsecondary institutions could only be disclosed to an SEA if the SEA had legal authority to evaluate postsecondary institutions. This interpretation restricted SEAs from conducting analyses to determine how effectively their own programs are preparing students for higher education and from identifying effective programs. As a result, this interpretation resulted in a regulatory framework for FERPA that has hindered efforts to improve education. The primary benefit of this change is that it will allow SEAs to conduct analyses of data that includes PII from education records for the purpose of program evaluations (consistent with FERPA and other Federal and State confidentiality and privacy provisions) without incurring the prohibitive costs of obtaining prior written consent from eligible students or parents.

Educational Agency or Institution

Sections (f) and (g) of FERPA authorize the Secretary to take appropriate actions to enforce the law and address FERPA violations, but subpart E of the current FERPA regulations only addressed alleged violations of FERPA by an ''educational agency or institution.'' Because the Department had not interpreted the term ''educational agency or institution'' to include agencies or institutions that students do not attend (such as an SEA), the current FERPA regulations do not specifically permit the Secretary to bring an enforcement action against an SEA or other State or local educational authority or any other recipient of Department funds under a program administered by the Secretary that did not meet the definition of an ''educational agency or institution'' under FERPA. Thus, for example, if an SEA improperly redisclosed PII from education records obtained from its LEAs, the Department could pursue enforcement actions against each of the LEAs (because the Department views an LEA as an educational agency attended by students), but not the SEA. These final regulations amend the regulatory provisions in subpart E to clarify that the Secretary may investigate, process, review, and enforce complaints and violations of FERPA against an educational agency or institution, any other recipient of Department funds under a program administered by the Secretary, or other third parties.

This change will result in some administrative savings and improve the efficiency of the enforcement process. Under the current regulations, if, for example, an SEA with 500 LEAs improperly redisclosed PII from its SLDS to an unauthorized party, the Department would have had to investigate each of the 500 LEAs, which are unlikely to have had knowledge relating to the disclosure. Under the final regulations, the LEAs will be relieved of any administrative costs associated with responding to the Department's request for information about the disclosure and the Department will immediately direct the focus of its investigation on the SEA, the agency most likely to have information on and bear responsibility for the disclosure of PII, without having to spend time and resources contacting the LEAs.

Regulatory Flexibility Act Certification

The Secretary certifies that this regulatory action will not have a significant economic impact on a substantial number of small entities.

The small entities that this final regulatory action will affect are small LEAs. The Secretary believes that the costs imposed by these regulations will be limited to paperwork burden related to requirements concerning data-sharing agreements and that the benefits from ensuring that PII from education records are collected, stored, and shared

appropriately outweigh any costs incurred by these small LEAs. In addition, it is possible that State and local educational authorities may enter into agreements with small institutions of higher education or other small entities that will serve as their authorized representatives to conduct evaluations or other authorized activities. Entering into such agreements would be entirely voluntary on the part of the institutions of higher education or other entities, would be of minimal cost, and presumably would be for the benefit of the institution of higher education or other entity.

The U.S. Small Business Administration Size Standards define as ''small entities'' for-profit or nonprofit institutions with total annual revenue below $7,000,000 or, if they are institutions controlled by small governmental jurisdictions (that are comprised of cities, counties, towns, townships, villages, school districts, or special districts), with a population of less than 50,000.

According to estimates from the U.S. Census Bureau's Small Area Income and Poverty Estimates programs that were based on school district boundaries for the 2007–2008 school year, there are 12,484 LEAs in the country that include fewer than 50,000 individuals within their boundaries and for which there is estimated to be at least one school-age child. In its 1997 publication, *Characteristics of Small and Rural School Districts,* the NCES defined a small school district as ''one having fewer students in membership than the sum of (a) 25 students per grade in the elementary grades it offers (usually K–8) and (b) 100 students per grade in the secondary grades it offers (usually 9–12).'' Using this definition, a district would be considered small if it had fewer than 625 students in membership. The Secretary believes that the 4,800 very small LEAs that meet this second definition are highly unlikely to enter into data-sharing agreements directly with outside entities.

In the NPRM, the Department solicited comments from entities familiar with data sharing in small districts on the number of entities likely to enter into agreements each year, the number of such agreements, and the number of hours required to execute each agreement, but we received no comments and do not have reliable data with which to estimate how many of the remaining 7,684 small LEAs will enter into data-sharing agreements. For small LEAs that enter into data-sharing agreements, we estimate that they will spend approximately 4 hours executing each agreement, using a standard data-sharing protocol. Thus, we assume the impact on the entities will be minimal.

Federalism

Executive Order 13132 requires us to ensure meaningful and timely input by State and local elected officials in the development of regulatory policies that have federalism implications. ''Federalism implications'' means substantial direct effects on the States, on the relationship between the National Government and the States, or on the distribution of power and responsibilities among the various levels of government. Among other requirements, the Executive order requires us to consult with State and local elected officials respecting any regulations that have federalism implications and either preempt State law or impose substantial direct compliance costs on State and local governments, and are not required by statute, unless the Federal government provides the funds for those costs.

The Department has reviewed these final regulations in accordance with Executive Order 13132. We have concluded that these final regulations do not have federalism implications, as defined in the Executive order. The regulations do not have substantial direct effects on the States, on the relationship between the national government and the States, or on the distribution of power and responsibilities among the various levels of government.

In the NPRM we explained that the proposed regulations in §§ 99.3, 99.31(a)(6), and 99.35 may have federalism implications, as defined in Executive Order 13132, and we asked that State and local elected officials make comments in this regard. One commenter stated that it believed that some of the proposed changes would increase burdens on SEAs, especially with respect to enforcing the destruction of PII from education records once a study or an audit or evaluation has ended.

The FERPA requirements that PII from education records be destroyed when no longer needed for both the studies exception and the audit or evaluation exception are statutory (20 U.S.C. 1232g(b)(1)(F) and 1232g(b)(3)). Further, the regulatory provisions concerning destruction for these two exceptions (§§ 99.31(a)(6) and 99.35) are not new. Therefore, these final regulations do not include additional burden.

After giving careful consideration to the comment, we conclude that these final regulations do not have federalism implications as defined in Executive Order 13132.

Paperwork Reduction Act of 1995

As part of its continuing effort to reduce paperwork and respondent burden, the Department conducts a preclearance consultation program to provide the general public and Federal agencies with an opportunity to comment on proposed and continuing collections of information in accordance with the Paperwork Reduction Act of 1995 (PRA) (44 U.S.C. 3506(c)(2)(A)). This helps ensure that: the public understands the Department's collection instructions; respondents can provide the requested data in the desired format; reporting burden (time and financial resources) is minimized; collection instruments are clearly understood; and the Department can properly assess the impact of collection requirements on respondents. The term ''collections of information'' under the PRA includes regulatory requirements that parties must follow concerning paperwork, *e.g.,* the requirement that educational agencies and institutions annually notify parents and eligible students of their rights under FERPA. It does not necessarily mean that information is being collected by a government entity.

Sections 99.7, 99.31(a)(6)(ii), 99.35(a)(3), and 99.37(d) contain information collection requirements. In the NPRM published on April 8, 2011, we requested public comments on the information collection requirements in proposed §§ 99.31(a)(6)(ii) and 99.35(a)(3). Since publication of the NPRM, we have determined that § 99.37(d) also has an information collection associated with it. In addition, since publication of the NPRM, we decided to make changes to the model notification, which we provide to assist entities to comply with the annual notification of rights requirement in § 99.7. Therefore, this section discusses the information collections associated with these four regulatory provisions. These information collections will be submitted to OMB for review and approval. A valid OMB control number will be assigned to the information collection requirements at the end of the affected sections of the regulations.

Section 99.7—Annual Notification of Rights Requirement (OMB Control Number 1875–0246)

Although we did not propose any changes to § 99.7, which requires that educational agencies and institutions annually notify parents and eligible students of their rights under FERPA, we did make some modifications to our

model notification associated with this requirement. Specifically, to allow parents and eligible students to more fully understand the circumstances under which disclosures may occur without their consent, we have amended the model annual notifications to include a listing of the various exceptions to the general consent rule in the regulations. The model notices (one for elementary and secondary schools and another one for postsecondary institutions) are included as Appendix B and Appendix C to this notice. We also post the model notifications on our Web site and have indicated the site address in the preamble. We do not believe that this addition to the model notification increases the currently approved burden of .25 hours (15 minutes) we previously estimated for the annual notification of rights requirement.

Section 99.31(a)(6)(ii)—Written Agreements for Studies (OMB Control Number 1875–0246)

The final regulations modify the information collection requirements in § 99.31(a)(6)(ii); however, the Department does not believe these regulatory changes result in any new burden to State or local educational authorities. As amended, § 99.31(a)(6)(ii) clarifies that FERPA-permitted entities may enter into written agreements with organizations conducting studies for, or on behalf of, educational agencies and institutions. We do not believe this will result in a change or an increase in burden because the provision would permit an organization conducting a study to enter into one written agreement with a FERPA-permitted entity, rather than making the organization enter into multiple written agreements with a variety of schools and school districts.

Section 99.35(a)(3)—Written Agreements for Audits, Evaluations, Compliance or Enforcement Activities (OMB Control Number 1875–0246)

Section 99.35(a)(3) requires FERPA-permitted entities to use a written agreement to designate authorized representatives other than agency employees. Under the final regulations, the agreement must: (1) Designate the individual or entity as an authorized representative; (2) specify the PII from education records to be disclosed; (3) specify that the purpose for which the PII from education records is disclosed to the authorized representative is to carry out an audit or evaluation of Federal- or State-supported education programs, or to enforce or to comply with Federal legal requirements that relate to those programs; (4) describe the activity to make clear that it legitimately fits within the exception of § 99.31; (5) require the authorized representative to destroy PII from education records when the information is no longer needed for the purpose specified; (6) specify the time period in which the PII from education records must be destroyed; and (7) establish policies and procedures, consistent with FERPA and other Federal and State confidentiality and privacy provisions, to protect PII from education records from further disclosure (except back to the disclosing entity) and unauthorized use. The total estimated burden under this provision is 9,928 hours. Specifically, the burden for States under this provision is estimated to be 40 hours annually for each of the 103 State educational authorities in the various States and territories subject to FERPA (one for K–12 and one for postsecondary in each SEA). Assuming that each State authority handles the agreements up to 10 times per year with an estimated 4 hours per agreement, the total anticipated increase in annual burden would be 4,120 hours for this new requirement in OMB Control Number 1875–0246. In addition, the burden for large LEAs and postsecondary institutions (1,452 educational agencies and institutions with a student population of over 10,000) is estimated to be 4 hours annually. Assuming each large LEA and postsecondary institution handles the agreements up to 1 time per year with an estimated 4 hours per agreement, the total anticipated increase in annual burden for large LEAs and postsecondary institutions would be 5,808 hours for this requirement.

Note: For purposes of the burden analysis for § 99.35(a)(3), we estimate the burden on large LEAs and postsecondary institutions because we believe that estimating burden for these institutions captures the high-end of the burden estimate. We expect that burden for smaller LEAs and postsecondary institutions under § 99.35(a)(3) would be much less than estimated here.

Section 99.37(d)—Parental Notice of Disclosure of Directory Information (OMB Control Number 1875–0246)

Section 99.37(d) requires any educational agency or institution that elects to implement a limited directory information policy to specify its policy in the public notice to parents and eligible students in attendance at the educational agency or institution. We do not expect this requirement to result in an additional burden for most educational agencies and institutions because educational agencies and institutions are already required under § 99.37(a) to provide public notice of its directory information policy. However, the change reflected in amended § 99.37(d) could result in a burden increase for an educational agency or institution that currently has a policy of disclosing all directory information and elects, under the new regulations, to limit the disclosure of directory information. The agency or institution would now be required to inform parents and eligible students that it has a limited directory information policy. The notice provides parents and eligible students with the opportunity to opt out of the disclosure of directory information. Additionally, many educational agencies and institutions include their directory information notice as part of the required annual notification of rights under § 99.7, which is already listed as a burden and approved under OMB Control Number 1875–0246. These educational agencies and institutions, therefore, would not experience an increase in burden associated with the changes reflected in § 99.37(d).

Assessment of Educational Impact

In the NPRM, and in accordance with section 441 of the General Education Provisions Act, 20 U.S.C. 1221e–4, we requested comments on whether the proposed regulations would require transmission of information that any other agency or authority of the United States gathers or makes available.

Based on the response to the NPRM and on our review, we have determined that these final regulations do not require transmission of information that any other agency or authority of the United States gathers or makes available.

Accessible Format: Individuals with disabilities can obtain this document in an accessible format (*e.g.,* braille, large print, audiotape, or compact disc) on request to the program contact person listed under **FOR FURTHER INFORMATION CONTACT.**

Electronic Access to This Document: The official version of this document is the document published in the **Federal Register.** Free Internet access to the official edition of the **Federal Register** and the Code of Federal Regulations is available via the Federal Digital System at: *http://www.gpo.gov/fdsys.* At this site you can view this document, as well as all other documents of this Department published in the **Federal Register,** in text or Adobe Portable Document Format (PDF). To use PDF you must have Adobe Acrobat Reader, which is available free at the site.

You may also access documents of the Department published in the **Federal**

Register by using the article search feature at: *http://www.federalregister.gov.* Specifically, through the advanced search feature at this site, you can limit your search to documents published by the Department.

(Catalog of Federal Domestic Assistance Number does not apply.)

List of Subjects in 34 CFR Part 99

Administrative practice and procedure, Directory information, Education records, Information, Parents, Privacy, Records, Social Security numbers, Students.

Dated: November 23, 2011.

Arne Duncan,

Secretary of Education.

For the reasons discussed in the preamble, the Secretary amends part 99 of title 34 of the Code of Federal Regulations as follows:

PART 99—FAMILY EDUCATIONAL RIGHTS AND PRIVACY

■ 1. The authority citation for part 99 continues to read as follows:

Authority: 20 U.S.C. 1232g, unless otherwise noted.

■ 2. Section 99.3 is amended by:

■ A. Adding, in alphabetical order, definitions for *authorized representative, early childhood education program,* and *education program.*

■ B. Revising the definition of *directory information.* The additions and revision read as follows:

§ 99.3 What definitions apply to these regulations?

* * * * *

Authorized representative means any entity or individual designated by a State or local educational authority or an agency headed by an official listed in § 99.31(a)(3) to conduct—with respect to Federal- or State-supported education programs—any audit or evaluation, or any compliance or enforcement activity in connection with Federal legal requirements that relate to these programs.

(Authority: 20 U.S.C. 1232g(b)(1)(C), (b)(3), and (b)(5))

* * * * *

Directory information means information contained in an education record of a student that would not generally be considered harmful or an invasion of privacy if disclosed.

(a) Directory information includes, but is not limited to, the student's name; address; telephone listing; electronic mail address; photograph; date and place of birth; major field of study; grade level; enrollment status (*e.g.,* undergraduate or graduate, full-time or part-time); dates of attendance; participation in officially recognized activities and sports; weight and height of members of athletic teams; degrees, honors, and awards received; and the most recent educational agency or institution attended.

(b) Directory information does not include a student's—

(1) Social security number; or

(2) Student identification (ID) number, except as provided in paragraph (c) of this definition.

(c) In accordance with paragraphs (a) and (b) of this definition, directory information includes—

(1) A student ID number, user ID, or other unique personal identifier used by a student for purposes of accessing or communicating in electronic systems, but only if the identifier cannot be used to gain access to education records except when used in conjunction with one or more factors that authenticate the user's identity, such as a personal identification number (PIN), password or other factor known or possessed only by the authorized user; and

(2) A student ID number or other unique personal identifier that is displayed on a student ID badge, but only if the identifier cannot be used to gain access to education records except when used in conjunction with one or more factors that authenticate the user's identity, such as a PIN, password, or other factor known or possessed only by the authorized user.

(Authority: 20 U.S.C. 1232g(a)(5)(A))

* * * * *

Early childhood education program means—

(a) A Head Start program or an Early Head Start program carried out under the Head Start Act (42 U.S.C. 9831 *et seq.*), including a migrant or seasonal Head Start program, an Indian Head Start program, or a Head Start program or an Early Head Start program that also receives State funding;

(b) A State licensed or regulated child care program; or

(c) A program that—

(1) Serves children from birth through age six that addresses the children's cognitive (including language, early literacy, and early mathematics), social, emotional, and physical development; and

(2) Is—

(i) A State prekindergarten program;

(ii) A program authorized under section 619 or part C of the Individuals with Disabilities Education Act; or

(iii) A program operated by a local educational agency.

* * * * *

Education program means any program that is principally engaged in the provision of education, including, but not limited to, early childhood education, elementary and secondary education, postsecondary education, special education, job training, career and technical education, and adult education, and any program that is administered by an educational agency or institution.

(Authority: 20 U.S.C. 1232g(b)(3), (b)(5))

* * * * *

■ 3. Section 99.31 is amended by:

■ A. Removing paragraph (a)(6)(iii).

■ B. Redesignating paragraph (a)(6)(ii) as paragraph (a)(6)(iii).

■ C. Adding a new paragraph (a)(6)(ii).

■ D. Revising the introductory text of newly redesignated paragraph (a)(6)(iii).

■ E. Revising the introductory text of newly redesignated paragraph (a)(6)(iii)(C).

■ F. Revising newly redesignated paragraph (a)(6)(iii)(C)(*4*).

■ G. Revising paragraph (a)(6)(iv).

The addition and revisions read as follows:

§ 99.31 Under what conditions is prior consent not required to disclose information?

(a) * * *

(6) * * *

(ii) Nothing in the Act or this part prevents a State or local educational authority or agency headed by an official listed in paragraph (a)(3) of this section from entering into agreements with organizations conducting studies under paragraph (a)(6)(i) of this section and redisclosing personally identifiable information from education records on behalf of educational agencies and institutions that disclosed the information to the State or local educational authority or agency headed by an official listed in paragraph (a)(3) of this section in accordance with the requirements of § 99.33(b).

(iii) An educational agency or institution may disclose personally identifiable information under paragraph (a)(6)(i) of this section, and a State or local educational authority or agency headed by an official listed in paragraph (a)(3) of this section may redisclose personally identifiable information under paragraph (a)(6)(i) and (a)(6)(ii) of this section, only if—

* * * * *

(C) The educational agency or institution or the State or local educational authority or agency headed by an official listed in paragraph (a)(3)

of this section enters into a written agreement with the organization that—

* * * * *

(*4*) Requires the organization to destroy all personally identifiable information when the information is no longer needed for the purposes for which the study was conducted and specifies the time period in which the information must be destroyed.

(iv) An educational agency or institution or State or local educational authority or Federal agency headed by an official listed in paragraph (a)(3) of this section is not required to initiate a study or agree with or endorse the conclusions or results of the study.

* * * * *

§ 99.33 [Amended]

■ 4. Section 99.33 is amended by removing paragraph (e).

■ 5. Section 99.35 is amended by:

■ A. Revising paragraph (a)(2).

■ B. Adding a new paragraph (a)(3).

■ C. Revising paragraph (b).

■ D. Revising the authority citation at the end of the section.

The addition and revisions read as follows:

§ 99.35 What conditions apply to disclosure of information for Federal or State program purposes?

(a) * * *

(2) The State or local educational authority or agency headed by an official listed in § 99.31(a)(3) is responsible for using reasonable methods to ensure to the greatest extent practicable that any entity or individual designated as its authorized representative—

(i) Uses personally identifiable information only to carry out an audit or evaluation of Federal- or State-supported education programs, or for the enforcement of or compliance with Federal legal requirements related to these programs;

(ii) Protects the personally identifiable information from further disclosures or other uses, except as authorized in paragraph (b)(1) of this section; and

(iii) Destroys the personally identifiable information in accordance with the requirements of paragraphs (b) and (c) of this section.

(3) The State or local educational authority or agency headed by an official listed in § 99.31(a)(3) must use a written agreement to designate any authorized representative, other than an employee. The written agreement must—

(i) Designate the individual or entity as an authorized representative;

(ii) Specify—

(A) The personally identifiable information from education records to be disclosed;

(B) That the purpose for which the personally identifiable information from education records is disclosed to the authorized representative is to carry out an audit or evaluation of Federal- or State-supported education programs, or to enforce or to comply with Federal legal requirements that relate to those programs; and

(C) A description of the activity with sufficient specificity to make clear that the work falls within the exception of § 99.31(a)(3), including a description of how the personally identifiable information from education records will be used;

(iii) Require the authorized representative to destroy personally identifiable information from education records when the information is no longer needed for the purpose specified;

(iv) Specify the time period in which the information must be destroyed; and

(v) Establish policies and procedures, consistent with the Act and other Federal and State confidentiality and privacy provisions, to protect personally identifiable information from education records from further disclosure (except back to the disclosing entity) and unauthorized use, including limiting use of personally identifiable information from education records to only authorized representatives with legitimate interests in the audit or evaluation of a Federal- or State-supported education program or for compliance or enforcement of Federal legal requirements related to these programs.

(b) Information that is collected under paragraph (a) of this section must—

(1) Be protected in a manner that does not permit personal identification of individuals by anyone other than the State or local educational authority or agency headed by an official listed in § 99.31(a)(3) and their authorized representatives, except that the State or local educational authority or agency headed by an official listed in § 99.31(a)(3) may make further disclosures of personally identifiable information from education records on behalf of the educational agency or institution in accordance with the requirements of § 99.33(b); and

(2) Be destroyed when no longer needed for the purposes listed in paragraph (a) of this section.

* * * * *

(Authority: 20 U.S.C. 1232g(b)(1)(C), (b)(3), and (b)(5))

■ 5. Section 99.37 is amended by:

■ A. Revising paragraph (c).

■ B. Redesignating paragraph (d) as paragraph (e).

■ C. Adding a new paragraph (d).

The addition and revision read as follows:

§ 99.37 What conditions apply to disclosing directory information?

* * * * *

(c) A parent or eligible student may not use the right under paragraph (a)(2) of this section to opt out of directory information disclosures to—

(1) Prevent an educational agency or institution from disclosing or requiring a student to disclose the student's name, identifier, or institutional email address in a class in which the student is enrolled; or

(2) Prevent an educational agency or institution from requiring a student to wear, to display publicly, or to disclose a student ID card or badge that exhibits information that may be designated as directory information under § 99.3 and that has been properly designated by the educational agency or institution as directory information in the public notice provided under paragraph (a)(1) of this section.

(d) In its public notice to parents and eligible students in attendance at the agency or institution that is described in paragraph (a) of this section, an educational agency or institution may specify that disclosure of directory information will be limited to specific parties, for specific purposes, or both. When an educational agency or institution specifies that disclosure of directory information will be limited to specific parties, for specific purposes, or both, the educational agency or institution must limit its directory information disclosures to those specified in its public notice that is described in paragraph (a) of this section.

* * * * *

■ 6. Section 99.61 is revised to read as follows:

§ 99.61 What responsibility does an educational agency or institution, a recipient of Department funds, or a third party outside of an educational agency or institution have concerning conflict with State or local laws?

If an educational agency or institution determines that it cannot comply with the Act or this part due to a conflict with State or local law, it must notify the Office within 45 days, giving the text and citation of the conflicting law. If another recipient of Department funds under any program administered by the Secretary or a third party to which personally identifiable information from education records has been non-

consensually disclosed determines that it cannot comply with the Act or this part due to a conflict with State or local law, it also must notify the Office within 45 days, giving the text and citation of the conflicting law.

(Authority: 20 U.S.C. 1232g(f))

■ 7. Section 99.62 is revised to read as follows:

§ 99.62 What information must an educational agency or institution or other recipient of Department funds submit to the Office?

The Office may require an educational agency or institution, other recipient of Department funds under any program administered by the Secretary to which personally identifiable information from education records is non-consensually disclosed, or any third party outside of an educational agency or institution to which personally identifiable information from education records is non-consensually disclosed to submit reports, information on policies and procedures, annual notifications, training materials, or other information necessary to carry out the Office's enforcement responsibilities under the Act or this part.

(Authority: 20 U.S.C. 1232g(b)(4)(B), (f), and (g))

■ 8. Section 99.64 is amended by:

■ A. Revising paragraphs (a) and (b).

■ B. Revising the authority citation at the end of the section.

The revisions read as follows:

§ 99.64 What is the investigation procedure?

(a) A complaint must contain specific allegations of fact giving reasonable cause to believe that a violation of the Act or this part has occurred. A complaint does not have to allege that a violation is based on a policy or practice of the educational agency or institution, other recipient of Department funds under any program administered by the Secretary, or any third party outside of an educational agency or institution.

(b) The Office investigates a timely complaint filed by a parent or eligible student, or conducts its own investigation when no complaint has been filed or a complaint has been withdrawn, to determine whether an educational agency or institution or other recipient of Department funds under any program administered by the Secretary has failed to comply with a provision of the Act or this part. If the Office determines that an educational agency or institution or other recipient of Department funds under any program administered by the Secretary has failed to comply with a provision of the Act or this part, it may also determine whether the failure to comply is based on a policy or practice of the agency or institution or other recipient. The Office also investigates a timely complaint filed by a parent or eligible student, or conducts its own investigation when no complaint has been filed or a complaint has been withdrawn, to determine whether a third party outside of the educational agency or institution has failed to comply with the provisions of § 99.31(a)(6)(iii)(B) or has improperly redisclosed personally identifiable information from education records in violation of § 99.33.

* * * * *

(Authority: 20 U.S.C. 1232g(b)(4)(B), (f) and (g))

■ 9. Section 99.65 is amended by revising paragraph (a) to read as follows:

§ 99.65 What is the content of the notice of investigation issued by the Office?

(a) The Office notifies in writing the complainant, if any, and the educational agency or institution, the recipient of Department funds under any program administered by the Secretary, or the third party outside of an educational agency or institution if it initiates an investigation under § 99.64(b). The written notice—

(1) Includes the substance of the allegations against the educational agency or institution, other recipient, or third party; and

(2) Directs the agency or institution, other recipient, or third party to submit a written response and other relevant information, as set forth in § 99.62, within a specified period of time, including information about its policies and practices regarding education records.

* * * * *

■ 10. Section 99.66 is revised to read as follows:

§ 99.66 What are the responsibilities of the Office in the enforcement process?

(a) The Office reviews a complaint, if any, information submitted by the educational agency or institution, other recipient of Department funds under any program administered by the Secretary, or third party outside of an educational agency or institution, and any other relevant information. The Office may permit the parties to submit further written or oral arguments or information.

(b) Following its investigation, the Office provides to the complainant, if any, and the educational agency or institution, other recipient, or third party a written notice of its findings and the basis for its findings.

(c) If the Office finds that an educational agency or institution or other recipient has not complied with a provision of the Act or this part, it may also find that the failure to comply was based on a policy or practice of the agency or institution or other recipient. A notice of findings issued under paragraph (b) of this section to an educational agency or institution, or other recipient that has not complied with a provision of the Act or this part—

(1) Includes a statement of the specific steps that the agency or institution or other recipient must take to comply; and

(2) Provides a reasonable period of time, given all of the circumstances of the case, during which the educational agency or institution or other recipient may comply voluntarily.

(d) If the Office finds that a third party outside of an educational agency or institution has not complied with the provisions of § 99.31(a)(6)(iii)(B) or has improperly redisclosed personally identifiable information from education records in violation of § 99.33, the Office's notice of findings issued under paragraph (b) of this section—

(1) Includes a statement of the specific steps that the third party outside of the educational agency or institution must take to comply; and

(2) Provides a reasonable period of time, given all of the circumstances of the case, during which the third party may comply voluntarily.

(Authority: 20 U.S.C. 1232g(b)(4)(B), (f), and (g))

■ 11. Section 99.67 is revised to read as follows:

§ 99.67 How does the Secretary enforce decisions?

(a) If an educational agency or institution or other recipient of Department funds under any program administered by the Secretary does not comply during the period of time set under § 99.66(c), the Secretary may take any legally available enforcement action in accordance with the Act, including, but not limited to, the following enforcement actions available in accordance with part D of the General Education Provisions Act—

(1) Withhold further payments under any applicable program;

(2) Issue a complaint to compel compliance through a cease and desist order; or

(3) Terminate eligibility to receive funding under any applicable program.

(b) If, after an investigation under § 99.66, the Secretary finds that an educational agency or institution, other

recipient, or third party has complied voluntarily with the Act or this part, the Secretary provides the complainant and the agency or institution, other recipient, or third party with written notice of the decision and the basis for the decision.

(c) If the Office finds that a third party, outside the educational agency or institution, violates § 99.31(a)(6)(iii)(B), then the educational agency or institution from which the personally identifiable information originated may not allow the third party found to be responsible for the violation of § 99.31(a)(6)(iii)(B) access to personally identifiable information from education records for at least five years.

(d) If the Office finds that a State or local educational authority, a Federal agency headed by an official listed in § 99.31(a)(3), or an authorized representative of a State or local educational authority or a Federal agency headed by an official listed in § 99.31(a)(3), improperly rediscloses personally identifiable information from education records, then the educational agency or institution from which the personally identifiable information originated may not allow the third party found to be responsible for the improper redisclosure access to personally identifiable information from education records for at least five years.

(e) If the Office finds that a third party, outside the educational agency or institution, improperly rediscloses personally identifiable information from education records in violation of § 99.33 or fails to provide the notification required under § 99.33(b)(2), then the educational agency or institution from which the personally identifiable information originated may not allow the third party found to be responsible for the violation access to personally identifiable information from education records for at least five years.

(Authority: 20 U.S.C. 1232g(b)(4)(B) and (f); 20 U.S.C. 1234c)

Note: The following appendices will not appear in the Code of Federal Regulations.

BILLING CODE 4000–01–P

APPENDIX A

The Family Educational Rights and Privacy Act

Guidance for Reasonable Methods and Written Agreements

What is the Family Educational Rights and Privacy Act?

The Family Educational Rights and Privacy Act (FERPA), 20 U.S.C. §1232g, is a Federal privacy law administered by the Family Policy Compliance Office (FPCO or Office) in the U.S. Department of Education (Department or we). FERPA and its implementing regulations in 34 CFR part 99 protect the privacy of students' education records and afford parents and eligible students (i.e., students who are 18 years of age or older or attend an institution of postsecondary education) certain rights to inspect and review education records, to seek to amend these records, and to consent to the disclosure of personally identifiable information from education records (PII from education records).

The general rule under FERPA is that PII from education records cannot be disclosed without written consent. However, FERPA includes several exceptions that permit the disclosure of PII from education records without consent. Two of these exceptions are discussed in this document – the studies exception and the audit or evaluation exception. The two exceptions contain specific, and slightly different, requirements, described more fully in the implementing regulations (34 CFR Part 99).

What is the purpose of this document?

The audience for this document includes schools, school districts (also referred to as local educational agencies (LEAs)), postsecondary institutions, and State educational authorities (such as State educational agencies (SEAs)) that may disclose PII from education records. Our intent is to provide these entities with information about requirements and best practices for data disclosures under the studies exception and the audit or evaluation exception.

What is the Studies Exception? (see 20 U.S.C. §1232g(b)(1)(F) and §99.31(a)(6))

The studies exception allows for the disclosure of PII from education records without consent to organizations conducting studies for, or on behalf of, schools, school districts, or postsecondary institutions. Studies can be for the purpose of developing, validating, or administering predictive tests; administering student aid programs; or improving instruction.

> Example: An SEA may disclose PII from education records without consent to an organization for the purpose of conducting a study that compares program outcomes across school districts to further assess what programs provide the best instruction and then duplicate those results in other districts.

What is the Audit or Evaluation Exception? (see 20 U.S.C. 1232g(b)(1)(C), (b)(3), and (b)(5) and §§99.31(a)(3) and 99.35)

The audit or evaluation exception allows for the disclosure of PII from education records without consent to authorized representatives of the Comptroller General of the U.S., the Attorney General, the Secretary of Education, and State or local educational authorities (FERPA-permitted entities). Under this exception, PII from education records must be used to audit or evaluate a Federal- or State-supported education program, or to enforce or comply with Federal legal requirements that relate to those education programs (audit, evaluation, or enforcement or compliance activity). The entity disclosing the PII from education records is specifically required to use reasonable methods to ensure to the greatest extent practicable that its designated authorized representative complies with FERPA and its regulations.

> Example: An LEA could designate a university as an authorized representative in order to disclose, without consent, PII from education records on its former students to the university. The university then may disclose, without consent, transcript data on these former students to the LEA to permit the LEA to evaluate how effectively the LEA prepared its students for success in postsecondary education.

How do you define education program?

"Education program" is an important term under the audit or evaluation exception because PII from education records can only be disclosed to audit or evaluate a Federal- or State-supported "education program," or to enforce or to comply with Federal legal requirements related to an education program. As specified in the FERPA regulations, §99.3, an education program must be principally engaged in the provision of education, including, but not limited to, early childhood education, elementary and secondary education, postsecondary education, special education, job training, career and technical education, and adult education, and any program that is administered by an educational agency or institution. For a definition of "early childhood program" please refer to §99.3 of the FERPA regulations.

Do we need to have a written agreement to disclose PII from education records without consent?

Yes. Both the studies exception and the audit or evaluation exception specifically require that the parties execute a written agreement when disclosing PII from education records without consent. The mandatory elements of that agreement vary slightly between the two exceptions.

Are there mandatory provisions for written agreements under the studies exception?

Yes. Written agreements under the studies exception must in accordance with the requirements in §99.31(a)(6)(iii)(C):

1. Specify the purpose, scope, and duration of the study and the information to be disclosed. Your agreement must specify the purpose of the study, describe its scope and its duration, and identify the information being disclosed.

2. Require the organization to use PII from education records only to meet the purpose or purposes of the study as stated in the written agreement. Your agreement must specify that the PII from education records must only be used for the study identified in the agreement.

3. Require the organization to conduct the study in a manner that does not permit the personal identification of parents and students by anyone other than representatives of the organization with legitimate interests. Your agreement must require the organization to conduct the study so as not to identify students or their parents. This typically means that the organization should allow internal access to PII from education records only to individuals with a need to know, and that the organization should take steps to maintain the confidentiality of the PII from education records at all stages of the study, including within the final report, by using appropriate disclosure avoidance techniques.

4. Require the organization to destroy all PII from education records when the information is no longer needed for the purposes for which the study was conducted, and specify the time period in which the information must be destroyed. Your agreement must require the organization to destroy the PII from education records when it is no longer needed for the identified study. You should determine the specific time period for destruction based on the facts and circumstances surrounding the disclosure and study. The parties to the written agreement may agree to amend the agreement to extend the time period if needed, but the agreement must include a time limit.

Are there mandatory provisions for written agreements under the audit or evaluation exception?

Yes. The mandatory provisions for written agreements under the audit or evaluation exception are similar to, but slightly different from, the provisions required for written agreements under the studies exception. Section 99.35(a)(3) specifically requires that the following provisions be included in written agreements under the audit or evaluation exception:

1. Designate the individual or entity as an authorized representative. Your agreement must formally designate the individual or entity as an authorized representative.

2. Specify the PII from education records to be disclosed. Your agreement must identify the information being disclosed.

3. Specify that the purpose for which the PII from education records is being disclosed to the authorized representative is to carry out an audit or evaluation of Federal- or State-supported education programs, or to enforce or to comply with Federal legal requirements that relate to those programs. Your agreement must state specifically that the disclosure of the PII from education records is in furtherance of an audit, evaluation, or enforcement or compliance activity.

4. Describe the activity with sufficient specificity to make clear that it falls within the audit or evaluation exception. This must include a description of how the PII from education records will be used. Don't be vague – the agreement must describe the methodology and why disclosure of PII from education records is necessary to accomplish the audit, evaluation, or enforcement or compliance activity.

5. Require the authorized representative to destroy the PII from education records when the information is no longer needed for the purpose specified. Your agreement should be clear about how the PII from education records will be destroyed.

6. Specify the time period in which the PII must be destroyed. Your agreement must provide a time period for destruction. You should determine the specific time period for destruction based on the facts and circumstances surrounding the disclosure and activity. The parties to the written agreement may agree to amend the agreement to extend the time period if needed, but the agreement must include a time limit.

7. Establish policies and procedures, consistent with FERPA and other Federal and State confidentiality and privacy provisions, to protect PII from education records from further disclosure (except back to the disclosing entity) and unauthorized use, including limiting use of PII from education records to only authorized representatives with legitimate interests in an audit, evaluation, or enforcement or compliance activity. The agreement must establish the policies and procedures, consistent with FEPRA and other Federal and State laws, to protect PII from education records from further disclosure or unauthorized use.

Can an entity receiving PII from education records disclose it in a way that allows individual students to be identified?

No. Absent consent from the parent or eligible student, FERPA provides that the PII from education records cannot be published in a way that would allow individual students and their parents to be identified. The organization conducting the study, audit, or evaluation can use PII from education records to conduct the study, audit, or evaluation, but results must be published in a way that protects the privacy and confidentiality of the individuals involved. For example, when publishing tables, cell suppression and other methods of disclosure avoidance can be used so that students cannot be identified through small numbers displayed in table cells.

Under the audit or evaluation exception, what is your responsibility to use "reasonable methods" to ensure that your authorized representative is FERPA-compliant to the greatest extent practicable? (§99.35(a)(2))

When you disclose PII from education records under the audit or evaluation exception, you are required to use "reasonable methods" to ensure to the greatest extent practicable that your authorized representative is FERPA-compliant. This specifically means ensuring that your authorized representative does the following:

1. Uses PII from education records only to carry out an audit or evaluation of Federal- or State-supported education programs, or for the enforcement of or compliance with, Federal legal requirements related to these programs. You should make sure that the proposed audit or evaluation is legitimate, and require in your written agreement that your authorized representative use the PII from education records only for that audit, evaluation, or enforcement or compliance activity. You should not disclose all of your PII from education records; rather, you should determine which specific elements your authorized representative needs and disclose only those.

2. Protects the PII from education records from further disclosures or other uses, except as authorized by you in accordance with FERPA. Your agreement must specify that your authorized representative may not further disclose the PII from education records, unless authorized. Approval to use the PII from education records for one audit or evaluation does not confer approval to use it for another.

3. Destroys the PII from education records when no longer needed for the audit, evaluation, or enforcement or compliance activity. Your agreement must specify that your authorized representative is required to destroy the PII from education records when it is no longer needed and specify the time period in which the PII must be destroyed.

Are there best practices that support reasonable methods?

Yes. While it is vital for organizations to comply with FERPA and its regulations, FERPA represents the floor for protecting privacy, not the ceiling. Accordingly, the Department is also specifying best practices, in which we describe actions we recommend you take to ensure that your authorized representative is protecting privacy to the greatest extent possible. Best practices are broader than FERPA compliance and describe recommended actions you should take to ensure that your authorized representative is FERPA-compliant to the greatest extent practicable.

These best practices may apply to data sharing under both the audit and evaluation exception and the studies exception. Please keep in mind that not all of the following best practices are appropriate in every instance, and this list does not include every possible protection. Before disclosing PII from education records under one of these exceptions, you should examine the following list and tailor your practices as necessary and appropriate.

- *Convey the limitations on the data.* You should take steps to ensure your authorized representative knows the limitations on the use of the data (i.e., that the data is only to carry out the audit or evaluation of Federal- or State-supported education programs, or to enforce or to comply with Federal legal requirements that relate to those programs).

- *Obtain assurances against redisclosure.* You should obtain assurances from your authorized representative that the data will not be redisclosed without permission, including such assurances that your authorized representative will provide you (the disclosing entity) the right to review any data prior to publication and to verify proper disclosure avoidance techniques have been used.

- *Be clear about destruction.* You should set clear expectations so your authorized representative knows what process needs to be followed for the proper destruction of PII from education records.

- *Maintain a right to audit.* You should maintain the right to conduct audits or other monitoring activities of your authorized representative's policies, procedures, and systems.

- *Verify the existence of disciplinary policies to protect data.* You may want to verify that your authorized representative has appropriate disciplinary policies for employees that violate FERPA. This can include termination in appropriate instances.

- *Verify the existence of a sound data security plan.* You may wish to verify before disclosing PII from education records that your authorized representative has a sound data security program, one that protects both data at rest and data in transmission. You have a responsibility to determine if your authorized representative's data security plan is adequate to prevent FERPA violations. The steps that you may need to take in order to verify a sound data security program are likely to vary with each situation. In some cases, it may suffice to add language to the written agreement that states what data security provisions are required. In other cases, it may be more prudent for you to take a hands-on approach and complete a physical inspection. Additionally, your written agreements could specify required data security elements, including requirements related to encryption, where the data can be hosted, transmission methodologies, and provisions to prevent unauthorized access.

- *Verify the existence of a data stewardship program.* You may want to examine your authorized representative's data stewardship program. Data stewardship should involve internal control procedures that protect PII from education records and include all aspects of data collection – from planning to maintenance to use and dissemination. The Department believes that a good data stewardship plan would have support and participation from across the organization, including the head of the organization, management, legal counsel, and data administrators, providers, and users. The plan should detail the organization's policies and procedures to protect privacy and data security, including the ongoing management of data collection, processing, storage, maintenance, use, and destruction. The plan could also include designating an individual to oversee the privacy and security of the PII from the education records it maintains. For more information, we have posted for comment a technical brief: "Data Stewardship: Managing Personally Identifiable Information in Electronic Student Education Records" that can be found at http://nces.ed.gov/programs/Ptac/Toolkit.aspx?section=Technical%20Briefs.

- *Disclose only PII from education records that is needed.* When you consider disclosing PII from education records to an authorized representative for an audit, evaluation, or enforcement or compliance activity, you may want to explore which specific data elements are necessary for that activity and provide only those elements. You should take care to ensure that you are not disclosing more PII from education records than needed for the stated activity and purpose. You should also explore whether PII from education records is actually required, or whether de-identified data would suffice.

- *Know to whom you are disclosing data.* You may want to require your authorized representative to conduct background investigations of employees who will have access to PII from education records, or you may want to conduct these investigations yourself. Additionally, you may want to require your authorized representative to

disclose past FERPA or data management violations. If you discover past violations, you would want to explore the circumstances behind the violation, and discover all information that would allow you to make an informed judgment on whether the individual or entity is likely to be a responsible data steward. This may include discovering whether the violation was covered up, including if it was voluntarily reported to affected students or FPCO, and whether appropriate breach response procedures were followed.

- *Verify training.* You may want to verify that your authorized representative has a training program to teach its employees about FERPA and how to protect PII from education records, or you may want to train your authorized representatives yourself.

Are there best practices for written agreements?

You should consider the following items for inclusion in your written agreements for work under both the audit or evaluation exception and the studies exception. We note that this list may not cover everything you want in your agreement – you should look to the facts and circumstances surrounding the disclosure agreement and include all terms necessary to be clear about roles, responsibilities, and expectations for safeguarding PII from education records.

- *Bind individuals to the agreement.* It can be important to bind not just the entity to whom you are disclosing PII from education records, but also the individuals who will be accessing that data. There are several ways to accomplish this result. One way is to identify the individuals in the agreement itself, and have them execute the agreement in their individual capacity as well as having a representative execute the agreement for the entity. Alternatively, your agreement can require individuals accessing the PII from education records to execute affidavits of nondisclosure or other documentation indicating their individual agreement to handle the PII from education records properly.

- *Agree on limitations on use of the PII from education records.* Your agreement should be clear about limitations on the use of the PII from education records, meaning that it can only be used for the activities described in the agreement. Your agreement may also address methodological limitations, for example, identifying which data sets, if any, the PII from education records may be linked.

- *Agree to not redisclose.* The most basic provision of the agreement is to make clear that the PII from education records is confidential and must not be redisclosed through direct data disclosures or publishing results that allow individuals to be directly or indirectly identified. FERPA-permitted entities may wish to require that specified disclosure avoidance methodologies be applied, or may wish to review all results prior to publication, or both.

- *Specify points of contact/data custodians.* Your written agreements should specify points of contact and data custodians (the individuals directly responsible for managing the data in question).

- *Mention Institutional Review Board (IRB) review and approval.* While FERPA does not mention IRBs, research proposals involving human subjects may have to be reviewed and approved by IRBs, if required under protection of human subject regulations of the Department and other Federal agencies. If IRB review and approval is required or expected, this may be noted in the written agreement.

- *State ownership of PII from education records.* You may wish for your agreement to be clear that, in disclosing PII from education records to an entity, you are in no way assigning ownership of the PII or records to that entity, and that it may only be redisclosed with your permission or otherwise in compliance with FERPA and its regulations.

- *Identify penalties.* Your agreement could include penalties under State contract law such as liquidated damages, data bans of varying length, and any other penalties the parties to the agreement deem appropriate. You may want your agreement to create third-party beneficiary rights, e.g., allowing parties injured by a data breach to sue for damages. While FERPA itself has little flexibility for sanctions, you can include a wide range of appropriate sanctions in your written agreements.

- *Set terms for data destruction.* As discussed previously, written agreements for both studies and audits and evaluations are required to contain provisions dealing with the destruction of PII from education records when those records are no longer needed. The agreement could include a method for documenting the destruction, such as the use of notarized statements.

- *Include funding terms.* If the agreement involves cost reimbursement, these details could be specified.

- *Maintain right to audit.* You may want to include the right to conduct audits or otherwise monitor the entity to which you are disclosing PII from education records to periodically affirm that the entity has appropriate policies and procedures in place to protect the PII from education records.

- *Identify and comply with all legal requirements.* It is important to remember that FERPA may not be the only law that governs your agreement. The agreement could broadly require compliance with all applicable Federal, State, and local laws and regulations, and identify the legal authority (whether express or implied) that permits the audit, evaluation, or enforcement or compliance activity.

- *Have plans to handle a data breach.* While no one anticipates a data breach, data loss may occur. You may wish to include specific procedures in your written agreements detailing the parties' expectations in the event that PII from education records is lost, including specifying the parties' responsibilities with regard to breach response and notification and financial responsibility.

- *Review and approve reported results.* If applicable, the written agreement could specify the parties' agreements with respect to publication of results. For example,

you may wish to review and approve reports prior to publication to make sure that they reflect the original intent of the agreement.

- *Define terms for conflict resolution.* The agreement could specify procedures for how disputes between the parties would be resolved.

- *Specify modification and termination procedures.* The agreement could specify how it can be modified or terminated. You may wish to provide specific provisions for termination based on improper handling of PII from education records.

What do I do if the terms of the written agreement are violated?

If the entity to which you have disclosed PII from education records without consent (whether under the studies exception or the audit an evaluation exception) violates the terms of the written agreement, you should evaluate your options under the penalty and termination provisions of the agreement. You may want to stop disclosing PII from education records to that organization, or pursue legal redress. If you have reason to believe that the entity has violated FERPA, you should contact FPCO.

How should the public be informed?

It is a best practice to keep the public informed when you disclose PII from education records.

- *Inform the public about written agreements.* Transparency is a best practice. You might want to post your data sharing agreements on your Web site, or provide some equivalent method to let interested parties know what data you are disclosing, the reasons it is being disclosed, and how it is being protected. While the Department generally recommends public posting of written agreements, parties are encouraged to review their contractual data security provisions carefully and redact, prior to publication, any provisions that may aid those seeking unauthorized access to systems. In certain instances a separate confidential IT Security Plan may be appropriate. For more information on data security best practices, see the Privacy Technical Assistance Center (PTAC) Web site: http://nces.ed.gov/programs/ptac.

Who should I call if I have questions?

If you would like more information about best practices to protect PII from education records, contact the PTAC Help Desk at PrivacyTA@ed.gov or 855-249-3072.

If you are a parent, eligible student, school, LEA, or SEA and would like more information on FERPA, please call FPCO at 1-800-872-5327.

APPENDIX B

Model Notification of Rights under FERPA for Elementary and Secondary Schools

The Family Educational Rights and Privacy Act (FERPA) affords parents and students who are 18 years of age or older ("eligible students") certain rights with respect to the student's education records. These rights are:

1. The right to inspect and review the student's education records within 45 days after the day the [Name of school ("School")] receives a request for access.

   Parents or eligible students should submit to the school principal [or appropriate school official] a written request that identifies the records they wish to inspect. The school official will make arrangements for access and notify the parent or eligible student of the time and place where the records may be inspected.

2. The right to request the amendment of the student's education records that the parent or eligible student believes are inaccurate, misleading, or otherwise in violation of the student's privacy rights under FERPA.

   Parents or eligible students who wish to ask the [School] to amend a record should write the school principal [or appropriate school official], clearly identify the part of the record they want changed, and specify why it should be changed. If the school decides not to amend the record as requested by the parent or eligible student, the school will notify the parent or eligible student of the decision and of their right to a hearing regarding the request for amendment. Additional information regarding the hearing procedures will be provided to the parent or eligible student when notified of the right to a hearing.

3. The right to provide written consent before the school discloses personally identifiable information (PII) from the student's education records, except to the extent that FERPA authorizes disclosure without consent.

   One exception, which permits disclosure without consent, is disclosure to school officials with legitimate educational interests. A school official is a person employed by the school as an administrator, supervisor, instructor, or support staff member (including health or medical staff and law enforcement unit personnel) or a person serving on the school board. A school official also may include a volunteer or contractor outside of the school who performs an institutional service of function for which the school would otherwise use its own employees and who is under the direct control of the school with respect to the use and maintenance of PII from education records, such as an attorney, auditor, medical consultant, or therapist; a parent or student volunteering to serve on an official committee, such as a disciplinary or grievance committee; or a parent, student, or other volunteer assisting another school official in performing his or her tasks. A school official has a legitimate educational interest if the official needs to review an education record in order to fulfill his or her professional responsibility.

[Optional] Upon request, the school discloses education records without consent to officials of another school district in which a student seeks or intends to enroll, or is already enrolled if the disclosure is for purposes of the student's enrollment or transfer. [NOTE: FERPA requires a school district to make a reasonable attempt to notify the parent or student of the records request unless it states in its annual notification that it intends to forward records on request.]

4. The right to file a complaint with the U.S. Department of Education concerning alleged failures by the [School] to comply with the requirements of FERPA. The name and address of the Office that administers FERPA are:

Family Policy Compliance Office
U.S. Department of Education
400 Maryland Avenue, SW
Washington, DC 20202

[NOTE: In addition, a school may want to include its directory information public notice, as required by §99.37 of the regulations, with its annual notification of rights under FERPA.]

[Optional] See the list below of the disclosures that elementary and secondary schools may make without consent.

FERPA permits the disclosure of PII from students' education records, without consent of the parent or eligible student, if the disclosure meets certain conditions found in §99.31 of the FERPA regulations. Except for disclosures to school officials, disclosures related to some judicial orders or lawfully issued subpoenas, disclosures of directory information, and disclosures to the parent or eligible student, §99.32 of the FERPA regulations requires the school to record the disclosure. Parents and eligible students have a right to inspect and review the record of disclosures. A school may disclose PII from the education records of a student without obtaining prior written consent of the parents or the eligible student –

- To other school officials, including teachers, within the educational agency or institution whom the school has determined to have legitimate educational interests. This includes contractors, consultants, volunteers, or other parties to whom the school has outsourced institutional services or functions, provided that the conditions listed in §99.31(a)(1)(i)(B)(*1*) - (a)(1)(i)(B)(*2*) are met. (§99.31(a)(1))

- To officials of another school, school system, or institution of postsecondary education where the student seeks or intends to enroll, or where the student is already enrolled if the disclosure is for purposes related to the student's enrollment or transfer, subject to the requirements of §99.34. (§99.31(a)(2))

- To authorized representatives of the U. S. Comptroller General, the U. S. Attorney General, the U.S. Secretary of Education, or State and local educational authorities, such as the State educational agency in the parent or eligible student's State (SEA). Disclosures under this provision may be made, subject to the requirements of §99.35, in connection with an audit or evaluation of Federal- or State-supported education

programs, or for the enforcement of or compliance with Federal legal requirements that relate to those programs. These entities may make further disclosures of PII to outside entities that are designated by them as their authorized representatives to conduct any audit, evaluation, or enforcement or compliance activity on their behalf. (§§99.31(a)(3) and 99.35)

- In connection with financial aid for which the student has applied or which the student has received, if the information is necessary to determine eligibility for the aid, determine the amount of the aid, determine the conditions of the aid, or enforce the terms and conditions of the aid. (§99.31(a)(4))

- To State and local officials or authorities to whom information is specifically allowed to be reported or disclosed by a State statute that concerns the juvenile justice system and the system's ability to effectively serve, prior to adjudication, the student whose records were released, subject to §99.38. (§99.31(a)(5))

- To organizations conducting studies for, or on behalf of, the school, in order to: (a) develop, validate, or administer predictive tests; (b) administer student aid programs; or (c) improve instruction. (§99.31(a)(6))

- To accrediting organizations to carry out their accrediting functions. (§99.31(a)(7))

- To parents of an eligible student if the student is a dependent for IRS tax purposes. (§99.31(a)(8))

- To comply with a judicial order or lawfully issued subpoena. (§99.31(a)(9))

- To appropriate officials in connection with a health or safety emergency, subject to §99.36. (§99.31(a)(10)

- Information the school has designated as "directory information" under §99.37. (§99.31(a)(11))

APPENDIX C

Model Notification of Rights under FERPA for Postsecondary Institutions

The Family Educational Rights and Privacy Act (FERPA) affords eligible students certain rights with respect to their education records. (An "eligible student" under FERPA is a student who is 18 years of age or older or who attends a postsecondary institution.) These rights include:

1. The right to inspect and review the student's education records within 45 days after the day the [Name of postsecondary institution ("School")] receives a request for access. A student should submit to the registrar, dean, head of the academic department, or other appropriate official, a written request that identifies the record(s) the student wishes to inspect. The school official will make arrangements for access and notify the student of the time and place where the records may be inspected. If the records are not maintained by the school official to whom the request was submitted, that official shall advise the student of the correct official to whom the request should be addressed.

2. The right to request the amendment of the student's education records that the student believes are inaccurate, misleading, or otherwise in violation of the student's privacy rights under FERPA.

   A student who wishes to ask the school to amend a record should write the school official responsible for the record, clearly identify the part of the record the student wants changed, and specify why it should be changed.

   If the school decides not to amend the record as requested, the school will notify the student in writing of the decision and the student's right to a hearing regarding the request for amendment. Additional information regarding the hearing procedures will be provided to the student when notified of the right to a hearing.

3. The right to provide written consent before the university discloses personally identifiable information (PII) from the student's education records, except to the extent that FERPA authorizes disclosure without consent.

   The school discloses education records without a student's prior written consent under the FERPA exception for disclosure to school officials with legitimate educational interests. A school official is a person employed by the [School] in an administrative, supervisory, academic, research, or support staff position (including law enforcement unit personnel and health staff); a person serving on the board of trustees; or a student serving on an official committee, such as a disciplinary or grievance committee. A school official also may include a volunteer or contractor outside of the [School] who performs an institutional service of function for which the school would otherwise use its own employees and who is under the direct control of the

school with respect to the use and maintenance of PII from education records, such as an attorney, auditor, or collection agent or a student volunteering to assist another school official in performing his or her tasks. A school official has a legitimate educational interest if the official needs to review an education record in order to fulfill his or her professional responsibilities for the [School].

[Optional] Upon request, the school also discloses education records without consent to officials of another school in which a student seeks or intends to enroll. [NOTE TO POSTSECONDARY INSTITUTION: FERPA requires a school to make a reasonable attempt to notify each student of these disclosures unless the school states in its annual notification that it intends to forward records on request.]

4. The right to file a complaint with the U.S. Department of Education concerning alleged failures by the [School] to comply with the requirements of FERPA. The name and address of the Office that administers FERPA is:

Family Policy Compliance Office
U.S. Department of Education
400 Maryland Avenue, SW
Washington, DC 20202

[NOTE: In addition, a school may want to include its directory information public notice, as required by §99.37 of the regulations, with its annual notification of rights under FERPA.]

[Optional] See the list below of the disclosures that postsecondary institutions may make without consent.

FERPA permits the disclosure of PII from students' education records, without consent of the student, if the disclosure meets certain conditions found in §99.31 of the FERPA regulations. Except for disclosures to school officials, disclosures related to some judicial orders or lawfully issued subpoenas, disclosures of directory information, and disclosures to the student, §99.32 of FERPA regulations requires the institution to record the disclosure. Eligible students have a right to inspect and review the record of disclosures. A postsecondary institution may disclose PII from the education records without obtaining prior written consent of the student –

- To other school officials, including teachers, within the [School] whom the school has determined to have legitimate educational interests. This includes contractors, consultants, volunteers, or other parties to whom the school has outsourced institutional services or functions, provided that the conditions listed in §99.31(a)(1)(i)(B)(*1*) - (a)(1)(i)(B)(*2*) are met. (§99.31(a)(1))

- To officials of another school where the student seeks or intends to enroll, or where the student is already enrolled if the disclosure is for purposes related to

the student's enrollment or transfer, subject to the requirements of §99.34. (§99.31(a)(2))

- To authorized representatives of the U. S. Comptroller General, the U. S. Attorney General, the U.S. Secretary of Education, or State and local educational authorities, such as a State postsecondary authority that is responsible for supervising the university's State-supported education programs. Disclosures under this provision may be made, subject to the requirements of §99.35, in connection with an audit or evaluation of Federal- or State-supported education programs, or for the enforcement of or compliance with Federal legal requirements that relate to those programs. These entities may make further disclosures of PII to outside entities that are designated by them as their authorized representatives to conduct any audit, evaluation, or enforcement or compliance activity on their behalf. (§§99.31(a)(3) and 99.35)

- In connection with financial aid for which the student has applied or which the student has received, if the information is necessary to determine eligibility for the aid, determine the amount of the aid, determine the conditions of the aid, or enforce the terms and conditions of the aid. (§99.31(a)(4))

- To organizations conducting studies for, or on behalf of, the school, in order to: (a) develop, validate, or administer predictive tests; (b) administer student aid programs; or (c) improve instruction. (§99.31(a)(6))

- To accrediting organizations to carry out their accrediting functions. ((§99.31(a)(7))

- To parents of an eligible student if the student is a dependent for IRS tax purposes. (§99.31(a)(8))

- To comply with a judicial order or lawfully issued subpoena. (§99.31(a)(9))

- To appropriate officials in connection with a health or safety emergency, subject to §99.36. (§99.31(a)(10))

- Information the school has designated as "directory information" under §99.37. (§99.31(a)(11))

- To a victim of an alleged perpetrator of a crime of violence or a non-forcible sex offense, subject to the requirements of §99.39. The disclosure may only include the final results of the disciplinary proceeding with respect to that alleged crime or offense, regardless of the finding. (§99.31(a)(13))

- To the general public, the final results of a disciplinary proceeding, subject to the requirements of §99.39, if the school determines the student is an alleged perpetrator of a crime of violence or non-forcible sex offense and the student

has committed a violation of the school's rules or policies with respect to the allegation made against him or her. (§99.31(a)(14))

- To parents of a student regarding the student's violation of any Federal, State, or local law, or of any rule or policy of the school, governing the use or possession of alcohol or a controlled substance if the school determines the student committed a disciplinary violation and the student is under the age of 21. (§99.31(a)(15))

[FR Doc. 2011–30683 Filed 12–1–11; 8:45 am]
BILLING CODE 4000–01–C

FEDERAL REGISTER

Vol. 76 Friday,

No. 232 December 2, 2011

Part III

Postal Service

Change in Rates and Classes of General Applicability for Competitive Products; Notice

POSTAL SERVICE

Change in Rates and Classes of General Applicability for Competitive Products

AGENCY: Postal Service.

ACTION: Notice of a change in rates of general applicability for competitive products.

SUMMARY: This notice sets forth changes in rates of general applicability for competitive products.

DATES: *Effective Date:* January 22, 2012.

FOR FURTHER INFORMATION CONTACT: Daniel J. Foucheaux, Jr., (202) 268–2989.

SUPPLEMENTARY INFORMATION: On October 18, 2011, pursuant to their authority under 39 U.S.C. 3632, the Governors of the Postal Service established prices and classification changes for competitive products. The Governors' Decision and the record of proceedings in connection with such decision are reprinted below in accordance with section 3632(b)(2).

Stanley F. Mires,

Attorney, Legal Policy & Legislative Advice.

Decision of the Governors of the United States Postal Service on Changes in Rates and Classes of General Applicability for Competitive Products (Governors' Decision No. 11–8)

October 18, 2011

Statement of Explanation and Justification

Pursuant to our authority under section 3632 of title 39, as amended by the Postal Accountability and Enhancement Act of 2006 (''PAEA''), we establish new prices of general applicability for the Postal Service's shipping services (competitive products), and such changes in classifications as are necessary to define the new prices. The changes are described generally below, with a detailed description of the changes in the attachment. The attachment includes the draft Mail Classification Schedule sections with changes in classification language in legislative format, and new prices displayed in the price charts.

As shown in the nonpublic annex being filed under seal herewith, the changes we establish should enable each competitive product to cover its attributable costs (39 U.S.C. 3633(a)(2)) and should result in competitive products as a whole complying with 39 U.S.C. 3633(a)(3), which, as implemented by 39 CFR 3015.7(c), requires competitive products to contribute a minimum of 5.5 percent to the Postal Service's institutional costs. Accordingly, no issue of subsidization of competitive products by market dominant products should arise (39 U.S.C. 3633(a)(1)). We therefore find that the new prices and classification changes are in accordance with 39 U.S.C. 3632–3633 and 39 CFR 3015.2.

I. Domestic Products

A. Express Mail

Overall, the Express Mail price change represents a 3.3 percent increase. The existing structure of zoned Retail, Commercial Base and Commercial Plus price categories is maintained. New for January 2012, we will be introducing a Flat Rate Box, priced at $39.95 across all channels.

Retail prices will increase an average of 4.4 percent. The price for the Retail Flat Rate Envelope and Legal Flat Rate Envelope, a significant portion of all Express Mail volume, is increasing 3.6 percent to $18.95.

The Commercial Base price category offers lower prices to customers who use online and other authorized postage payment methods. The Commercial Base prices will decrease 5.0 percent.

The Commercial Plus price category offers even lower prices to large-volume customers. Commercial Plus prices, as a whole, will receive a zero percent increase, although some prices will increase and other prices will decrease.

B. Priority Mail

Overall, Priority Mail prices will increase by 3.1 percent. However, the price increase varies by rate cell and price tier. The existing structure of Retail, Commercial Base, and Commercial Plus price categories is maintained.

Retail prices will increase an average of 3.2 percent. Flat Rate Box prices will be: Small, $5.35; Medium, $11.35; Large, $15.45; and Large APO/FPO/DPO, $13.45. The regular Flat Rate Envelope will be priced at $5.15, with the Legal Size and Padded Flat Rate Envelopes priced at $5.30 at retail.

The Commercial Base price category offers lower prices to customers using online and other authorized postage payment methods. The average price increase for Commercial Base will be 3.0 percent. A new, larger-sized Regional Rate Box price tier will be added to the two existing sizes. If deposited at retail, a $0.75 fee will be added.

The Commercial Plus price category offers even lower prices to large-volume customers. The average price increase for Commercial Plus will be 2.8 percent. This price category will continue to contain Critical Mail letters and flats, a half pound price, an assortment of Flat Rate packaging, and Commercial Plus Cubic pricing. Cubic mailers will have a reduced threshold of 150,000 pieces per year (reduced from 250,000) to qualify. Cubic mailers will also be able to use soft packaging. Finally, Open and Distribute pricing for specified trays and flat tubs will be introduced in January.

C. Parcel Select

On average, prices for Parcel Select, the Postal Service's bulk ground shipping product, will increase 8.5 percent. For destination entered parcels, the average price increases are 7.6 percent for parcels entered at a destination delivery unit (DDU), 7.8 percent for parcels entered at a destination plant (DSCF) and 6.8 percent for parcels entered at a destination Network Distribution Center (DNDC).

For nondestination-entered parcels, the average price increases are 1.5 percent for Origin Network Distribution Center (ONDC) presort, 0.9 percent for Network Distribution Center (NDC) presort, and 0.8 percent for nonpresort. The three-cent barcode discount will also be eliminated. Prices for Lightweight Parcel Select, formerly Standard Mail commercial parcels, will increase by 8.9 percent in order to complete its transfer to the competitive product list. Also, the maximum dimensions for Regional Ground will increase to accommodate any machinable parcel within this price category. Finally, in January 2012, the Intelligent Mail Package Barcode (IMpb) will provide customers with free visibility for these parcels.

D. Parcel Return Service

Parcel Return Service prices will have an overall price increase of 4.6 percent. Prices for parcels retrieved at a Return Network Distribution Center (RNDC) will have a zero percent overall increase, and prices for parcels picked up at a return delivery unit (RDU) will increase 8.9 percent. Additionally, the Postal Service's suite of returns offerings, including PRC, Merchandise Return Service, Priority Mail, First-Class mail, and Package Services, will have new ''Return Service'' branding.

E. Commercial First-Class Package Service

Commercial First-Class Mail parcels were recently transferred to the competitive product list, and will be renamed Commercial First-Class Package Service. This product is positioned as a lightweight (less than one pound) offering used by businesses for fulfillment purposes. Overall,

Commercial First-Class Package Service prices will increase 3.7 percent, with no structural changes.

F. Domestic Extra Services

Premium Forwarding Service prices will increase 3.4 percent. The weekly reshipment fee will increase to $15.25. On average, Address Enhancement Service prices will increase 7.3 percent. The 49 Post Office Box locations that were added to the competitive product list in June 2010 will be joined by 6,800 additional Post Office Box locations in January 2012. Additional fee ranges for these boxes in Fee Groups 2 through 7 will be added as well. Lastly, Package Intercept service will be introduced within the Competitive Ancillary Services product, priced at $10.95.

II. International Products

A. Expedited Services

International expedited services include Global Express Guaranteed (GXG) and Express Mail International (EMI). Overall, GXG prices will rise by 6 percent, and EMI will be subject to an overall 11.6 percent increase. Classification changes include changes to published discounts. In lieu of offering an across-the-board discount for customers using approved postage payment methods, published discounts will be expanded to include rate cell-specific discounted schedules for both GXG and EMI. The commercial base discount schedules replace the current across-the-board percentage discounts for eligible shipments using selected payment methods. Customers tendering at least $100,000 in revenue per year for GXG, EMI, and Priority Mail International (PMI) may request authorization for new commercial plus discounts. We are introducing two versions of a new Express Mail International Flat Rate Box, with a maximum weight of 20 pounds. Customers pay a flat rate of $59.95 to Canada and $74.95 for all other countries that accept Express Mail International. Classification changes also include country group assignments for the country of Tonga, and changes to the dimensional limits for EMI.

B. Priority Mail International

The overall increase for Priority Mail International (PMI) will be 8.7 percent. Classification changes include the simplification of dimensional criteria for flat rate envelopes and boxes, changes to the dimensional limits for PMI, and the introduction of commercial base and commercial plus discounts as described for GXG and EMI.

C. International Priority Airmail and International Surface Air Lift

Published prices International Priority Airmail (IPA) will increase by 1.0 percent, and International Surface Air Lift (ISAL) prices will increase by 13.7 percent.

D. Airmail M-Bags

The published prices for Airmail M-Bags will increase by 3.5 percent.

E. International Ancillary Services and Special Services

Prices for several international ancillary services and paper money orders will be increased. For international ancillary services, the overall increase is 5.0 percent. Money order prices will increase by 4.7 percent.

Order

The changes in prices and classes set forth herein shall be effective at 12:01 a.m. on January 22, 2012. We direct the Secretary to have this decision published in the **Federal Register** in accordance with 39 U.S.C. 3632(b)(2). We also direct management to file with the Postal Regulatory Commission appropriate notice of these changes.

By The Governors:

Louis J. Giuliano

Chairman

Part B

Competitive Products

2000 Competitive Product List

* * * * *

2001 Competitive Product Descriptions

* * * * *

2100 Domestic Products

* * * * *

2105 Express Mail

* * * * *

2105.2 Size and Weight Limitations

	Length	Height	Thickness	Weight
Minimum	large enough to accommodate postage, address, and other required elements on the address side			none
Maximum	108 inches in combined length and girth			70 pounds
Flat Rate Envelope	Nominal Sizes: Regular: 9.5 × 12.5 inches Legal: 9.5 × 15 inches			
Flat Rate Box	*Sizes:* *Various sizes as defined in the DMM.* *— not to exceed .35 cu. ft.*			

* * * * *

2105.5 Optional Features

The following additional services may be available in conjunction with the product specified in this section:

- Pickup On Demand Service
- Sunday/Holiday Delivery
- Ancillary Services (1505)
  - Address Correction Service (1505.1)
  - Collect On Delivery (1505.7)
  - Express Mail Insurance (1505.9)
  - Return Receipt (1505.13)
- Competitive Ancillary Services (2645)
  - Adult Signature Service (2645.1)
  - *Package Intercept Service (2645.2)*

2105.6 Prices

Retail Express Mail Zone/Weight

Maximum weight (pounds)	Zones 1 & 2 ($)	Zone 3 ($)	Zone 4 ($)	Zone 5 ($)	Zone 6 ($)	Zone 7 ($)	Zone 8 ($)
0.5	12.95	19.80	21.30	24.00	25.45	27.00	28.00
1	14.95	23.85	26.90	27.40	31.25	31.65	33.20
2	17.40	23.55	29.35	30.05	34.20	34.45	36.45
3	18.50	24.95	33.75	34.60	39.40	39.65	41.75
4	19.85	26.60	38.20	39.60	44.40	44.55	46.95
5	20.60	28.40	42.50	44.15	49.40	49.65	52.20
6	24.10	34.20	46.50	48.50	54.30	54.55	57.60
7	27.65	39.85	50.85	52.35	59.35	59.70	62.65
8	29.05	41.10	54.75	56.85	64.45	64.75	68.05
9	30.60	42.75	58.55	61.35	69.45	69.70	73.30
10	31.60	44.55	61.25	64.35	73.05	73.25	76.95
11	34.50	49.80	65.50	67.50	76.55	76.75	80.65
12	35.10	53.35	68.95	70.60	80.05	80.20	84.20
13	35.60	56.75	72.15	73.65	83.40	84.40	89.10
14	36.75	60.25	75.00	76.75	86.90	88.05	92.80
15	38.90	63.65	78.20	79.90	90.45	91.35	96.50
16	39.95	67.25	81.25	83.10	94.35	94.45	98.80
17	42.20	70.75	84.30	86.05	97.50	97.70	102.55
18	44.40	74.10	87.30	89.25	100.95	101.25	106.15
19	45.60	77.60	90.30	92.30	104.40	104.65	109.75
20	47.70	81.15	94.75	96.20	108.50	109.15	114.65
21	49.10	86.20	97.75	99.05	113.30	113.70	118.90
22	51.30	89.80	102.05	103.65	116.85	117.25	123.50
23	52.40	93.25	105.05	106.85	120.45	120.70	127.10
24	54.60	96.80	108.45	109.90	124.10	124.20	129.90
25	56.95	100.40	111.05	113.05	127.45	127.80	134.00
26	58.00	104.00	114.25	116.25	131.05	131.40	137.75
27	60.15	107.40	117.25	119.25	134.50	134.95	141.40
28	61.30	111.00	121.00	122.40	138.00	138.40	145.10
29	63.60	114.50	124.95	125.55	141.55	141.95	148.65
30	65.85	118.05	128.90	129.25	145.65	146.05	153.40
31	66.90	121.55	132.80	133.20	150.25	150.60	158.25
32	69.10	125.25	136.75	137.30	154.65	155.05	162.95
33	70.25	128.75	140.70	141.15	159.15	159.50	167.60
34	72.50	132.15	144.75	145.10	163.55	163.90	172.30
35	73.65	135.75	148.55	149.15	167.95	168.45	177.00
36	75.80	139.35	152.60	153.05	172.55	172.95	181.75
37	78.00	142.80	156.50	157.10	177.10	177.45	186.50
38	79.15	146.40	160.50	161.10	181.50	181.85	191.15
39	81.40	150.00	164.45	165.00	185.75	186.20	195.90
40	82.45	153.40	168.50	168.95	190.25	190.80	200.65
41	84.70	157.00	172.40	173.00	194.90	195.15	205.35
42	86.90	160.60	176.35	176.95	199.45	199.70	210.05
43	88.10	164.05	180.25	181.00	203.85	204.25	214.80
44	90.25	167.65	184.25	184.95	208.30	208.70	219.45
45	91.45	171.25	188.10	188.85	212.75	213.10	224.25
46	93.65	174.65	192.25	192.80	217.15	217.55	228.95
47	94.75	178.25	196.15	196.90	221.65	222.00	233.65
48	96.90	181.85	200.00	200.75	226.15	226.55	238.35
49	99.15	185.30	204.00	204.70	230.75	230.95	243.10
50	100.35	188.90	208.05	208.75	235.05	235.40	247.80
51	102.55	192.50	211.95	212.70	239.45	239.85	252.55
52	103.70	195.90	215.85	216.75	244.05	244.45	257.30
53	105.95	199.50	219.85	220.55	248.55	248.75	262.00
54	108.20	203.10	223.75	224.60	253.05	253.30	266.70
55	109.25	207.75	227.85	228.55	257.45	257.80	271.35
56	111.45	211.35	231.70	232.65	261.90	262.20	276.10
57	112.60	214.95	235.70	236.55	266.35	266.75	280.80
58	114.70	218.35	239.60	240.50	270.85	271.10	285.55
59	116.05	221.85	243.55	244.50	275.40	275.65	290.25
60	118.15	225.45	247.50	248.45	279.85	280.15	294.95
61	120.40	229.05	251.60	252.60	284.30	284.65	299.65
62	121.55	232.50	255.45	256.35	288.70	289.10	304.45
63	123.75	236.05	259.40	260.40	293.25	293.55	309.25
64	124.80	239.55	263.35	264.35	297.75	298.00	313.95
65	127.05	243.10	267.25	268.20	302.15	302.50	318.55
66	129.35	246.70	271.35	272.30	306.65	307.00	323.20
67	130.45	250.20	275.30	276.20	311.00	311.45	328.00
68	132.60	253.75	279.20	280.30	315.65	315.95	332.85
69	133.65	257.30	283.15	284.25	320.00	320.30	337.35
70	136.00	260.90	287.15	288.10	324.50	324.70	342.10

Retail Flat Rate Envelope

	($)
Retail Regular Flat Rate Envelope, per piece	18.95
Retail Legal Flat Rate Envelope, per piece	18.95

Retail Flat Rate Box

	($)
Retail Flat Rate Box, per piece	*39.95*

Commercial Base Zone/Weight

Maximum weight (pounds)	Zones 1 & 2 ($)	Zone 3 ($)	Zone 4 ($)	Zone 5 ($)	Zone 6 ($)	Zone 7 ($)	Zone 8 ($)
0.5	12.85	16.68	20.05	22.81	24.76	26.46	27.18
1	14.85	16.68	20.05	22.81	24.76	26.46	27.18
2	15.30	16.94	22.56	25.24	27.99	29.15	30.35
3	15.65	18.13	24.98	27.96	31.01	32.05	33.19
4	16.00	19.01	27.08	30.59	33.85	34.89	36.27
5	16.35	19.79	29.62	33.46	36.72	37.79	39.14
6	16.62	21.44	32.86	36.96	40.76	41.47	43.24
7	17.40	22.51	35.13	39.72	43.64	44.65	46.19
8	17.55	23.62	37.40	42.26	46.55	47.78	49.16
9	17.76	24.49	39.53	44.99	49.47	50.91	52.32
10	17.79	24.52	41.35	47.35	49.50	50.94	53.69
11	19.64	26.88	43.53	49.89	55.29	57.07	58.41
12	20.45	27.99	45.87	52.22	58.02	60.16	61.54
13	20.75	29.03	48.05	54.61	60.34	63.35	64.51
14	21.59	30.14	50.53	56.91	62.70	66.11	67.67
15	21.86	30.95	52.24	59.21	62.74	68.25	70.24
16	22.72	32.29	54.75	61.42	67.15	70.03	71.99
17	24.24	34.20	57.71	63.35	68.68	71.59	73.58
18	25.07	35.31	59.46	64.70	70.21	73.19	75.52
19	25.56	36.26	60.84	66.08	71.81	74.81	77.51
20	25.59	36.72	62.40	67.67	73.37	76.56	79.29
21	28.83	40.84	68.22	74.26	80.13	83.57	87.18
22	29.68	41.75	69.86	75.93	81.80	85.51	89.05
23	30.27	42.61	71.54	77.80	83.71	87.35	91.15
24	30.93	43.36	73.44	79.77	85.94	89.25	93.02
25	31.19	43.59	75.31	81.41	86.82	91.41	94.92
26	32.41	45.26	77.38	83.41	90.56	93.74	96.92
27	33.00	46.12	79.28	85.80	93.05	95.78	98.76
28	33.85	47.13	81.38	88.26	94.96	97.68	100.86
29	34.18	47.92	83.44	90.13	96.99	99.81	102.99
30	34.21	47.95	85.12	92.20	97.02	101.71	103.68
31	35.75	49.72	86.95	94.30	100.93	103.78	107.19
32	36.77	50.87	88.86	96.40	102.99	105.88	109.22
33	37.62	52.15	90.56	98.47	105.09	108.24	111.72
34	38.44	52.94	92.63	100.56	107.35	110.57	114.05
35	39.26	53.92	94.69	102.66	109.42	112.90	116.28
36	40.57	54.78	96.73	104.73	111.55	115.39	118.54
37	40.61	56.35	98.63	106.86	113.78	117.95	121.03
38	41.26	57.24	100.37	108.73	115.95	120.70	123.33
39	42.61	58.22	102.24	110.77	118.15	123.20	125.79
40	42.64	59.20	104.11	112.86	120.24	125.56	128.31
41	44.02	60.42	105.98	115.00	122.54	127.59	130.74
42	44.67	61.63	108.04	117.06	125.03	130.58	133.40
43	45.85	62.78	110.18	119.13	127.36	132.68	136.15
44	46.87	64.03	112.04	121.23	129.59	135.00	139.04
45	47.86	65.37	114.05	123.30	132.12	137.33	141.27
46	48.81	66.78	116.05	125.92	134.61	139.70	143.76
47	49.63	68.19	118.08	127.30	137.10	141.73	146.03
48	49.95	69.54	119.75	129.40	139.60	144.29	148.75
49	50.32	71.14	121.46	130.41	139.63	146.58	151.40
50	50.35	71.11	121.49	129.79	139.66	146.62	151.44
51	53.07	74.10	125.33	135.63	147.27	151.67	157.21
52	53.89	75.67	127.26	137.69	149.76	154.16	160.29
53	54.94	76.92	129.20	139.99	152.45	156.69	162.98
54	55.83	78.46	131.33	142.06	154.75	159.70	166.07

Maximum weight (pounds)	Zones 1 & 2 ($)	Zone 3 ($)	Zone 4 ($)	Zone 5 ($)	Zone 6 ($)	Zone 7 ($)	Zone 8 ($)
55	56.65	79.90	133.66	143.99	157.08	162.36	168.53
56	57.70	81.41	136.09	145.66	159.54	165.38	171.25
57	58.81	82.82	138.55	148.26	161.84	168.07	174.17
58	60.09	84.20	141.07	150.29	164.33	171.08	177.25
59	60.94	85.61	143.53	152.13	166.82	173.77	180.37
60	61.57	86.20	145.86	154.72	169.51	176.73	182.56
61	63.24	88.59	148.35	156.69	172.20	179.45	182.60
62	64.75	90.17	150.62	159.67	174.89	182.40	189.42
63	65.83	91.94	153.18	161.97	177.78	185.55	192.57
64	67.08	93.74	155.67	164.69	180.73	188.76	195.65
65	67.50	95.55	157.96	167.35	183.61	192.11	198.31
66	69.47	97.28	160.49	170.07	186.50	195.26	201.85
67	69.80	99.12	162.79	173.02	189.65	198.64	205.36
68	71.96	100.86	165.28	175.91	192.57	198.67	208.67
69	73.05	102.66	167.74	178.83	192.60	199.65	212.18
70	73.08	103.45	167.77	181.58	195.49	202.15	215.07

Commercial Base Flat Rate Envelope

	($)
Commercial Base Regular Flat Rate Envelope, per piece	17.75
Commercial Base Legal Flat Rate Envelope, per piece	17.75

Commercial Base Flat Rate Box

	($)
Commercial Base Flat Rate Box, per piece	*39.95*

Commercial Plus Zone/Weight

Maximum weight (pounds)	Zones 1 & 2 ($)	Zone 3 ($)	Zone 4 ($)	Zone 5 ($)	Zone 6 ($)	Zone 7 ($)	Zone 8 ($)
0.5	11.08	12.91	15.71	16.81	17.07	17.74	18.00
1	11.54	15.51	18.50	20.54	20.97	21.26	24.75
2	11.85	16.75	21.75	22.54	25.00	27.75	30.25
3	13.44	18.13	24.98	27.96	29.85	32.05	33.05
4	14.49	19.01	27.08	30.59	33.85	34.89	36.05
5	14.63	19.79	29.62	33.46	36.72	37.79	39.05
6	16.62	21.44	32.86	36.96	40.76	41.47	43.24
7	17.40	22.51	35.13	39.72	43.64	44.65	46.19
8	17.55	23.62	37.40	42.26	46.55	47.78	49.16
9	17.76	24.49	39.53	44.99	49.47	50.91	52.32
10	17.79	24.52	41.35	47.35	49.50	50.94	53.69
11	19.64	26.88	43.53	49.89	55.29	57.07	58.41
12	20.45	27.99	45.87	52.22	58.02	60.16	61.54
13	20.75	29.03	48.05	54.61	60.34	63.35	64.51
14	21.59	30.14	50.53	56.91	62.70	66.11	67.67
15	21.86	30.95	52.24	59.21	62.74	68.25	70.24
16	22.72	32.29	54.75	61.42	67.15	70.03	71.99
17	24.24	34.20	57.71	63.35	68.68	71.59	73.58
18	25.07	35.31	59.46	64.70	70.21	73.19	75.52
19	25.56	36.26	60.84	66.08	71.81	74.81	77.51
20	25.59	36.72	62.40	67.67	73.37	76.56	79.29
21	28.83	40.84	68.22	74.26	80.13	83.57	87.18
22	29.68	41.75	69.86	75.93	81.80	85.51	89.05
23	30.27	42.61	71.54	77.80	83.71	87.35	91.15
24	30.93	43.36	73.44	79.77	85.94	89.25	93.02
25	31.19	43.59	75.31	81.41	86.82	91.41	94.92
26	32.41	45.26	77.38	83.41	90.56	93.74	96.92
27	33.00	46.12	79.28	85.80	93.05	95.78	98.76
28	33.85	47.13	81.38	88.26	94.96	97.68	100.86
29	34.18	47.92	83.44	90.13	96.99	99.81	102.99
30	34.21	47.95	85.12	92.20	97.02	101.71	103.68
31	35.75	49.72	86.95	94.30	100.93	103.78	107.19
32	36.77	50.87	88.86	96.40	102.99	105.88	109.22

Maximum weight (pounds)	Zones 1 & 2 ($)	Zone 3 ($)	Zone 4 ($)	Zone 5 ($)	Zone 6 ($)	Zone 7 ($)	Zone 8 ($)
33	37.62	52.15	90.56	98.47	105.09	108.24	111.72
34	38.44	52.94	92.63	100.56	107.35	110.57	114.05
35	39.26	53.92	94.69	102.66	109.42	112.90	116.28
36	40.57	54.78	96.73	104.73	111.55	115.39	118.54
37	40.61	56.35	98.63	106.86	113.78	117.95	121.03
38	41.26	57.24	100.37	108.73	115.95	120.70	123.33
39	42.61	58.22	102.24	110.77	118.15	123.20	125.79
40	42.64	59.20	104.11	112.86	120.24	125.56	128.31
41	44.02	60.42	105.98	115.00	122.54	127.59	130.74
42	44.67	61.63	108.04	117.06	125.03	130.58	133.40
43	45.85	62.78	110.18	119.13	127.36	132.68	136.15
44	46.87	64.03	112.04	121.23	129.59	135.00	139.04
45	47.86	65.37	114.05	123.30	132.12	137.33	141.27
46	48.81	66.78	116.05	125.92	134.61	139.70	143.76
47	49.63	68.19	118.08	127.30	137.10	141.73	146.03
48	49.95	69.54	119.75	129.40	139.60	144.29	148.75
49	50.32	71.14	121.46	130.41	139.63	146.58	151.40
50	50.35	71.11	121.49	129.79	139.66	146.62	151.44
51	53.07	74.10	125.33	135.63	147.27	151.67	157.21
52	53.89	75.67	127.26	137.69	149.76	154.16	160.29
53	54.94	76.92	129.20	139.99	152.45	156.69	162.98
54	55.83	78.46	131.33	142.06	154.75	159.70	166.07
55	56.65	79.90	133.66	143.99	157.08	162.36	168.53
56	57.70	81.41	136.09	145.66	159.54	165.38	171.25
57	58.81	82.82	138.55	148.26	161.84	168.07	174.17
58	60.09	84.20	141.07	150.29	164.33	171.08	177.25
59	60.94	85.61	143.53	152.13	166.82	173.77	180.37
60	61.57	86.20	145.86	154.72	169.51	176.73	182.56
61	63.24	88.59	148.35	156.69	172.20	179.45	182.60
62	64.75	90.17	150.62	159.67	174.89	182.40	189.42
63	65.83	91.94	153.18	161.97	177.78	185.55	192.57
64	67.08	93.74	155.67	164.69	180.73	188.76	195.65
65	67.50	95.55	157.96	167.35	183.61	192.11	198.31
66	69.47	97.28	160.49	170.07	186.50	195.26	201.85
67	69.80	99.12	162.79	173.02	189.65	198.64	205.36
68	71.96	100.86	165.28	175.91	192.57	198.67	208.67
69	73.05	102.66	167.74	178.83	192.60	199.65	212.18
70	73.08	103.45	167.77	181.58	195.49	202.15	215.07

Commercial Plus Flat Rate Envelope

	($)
Commercial Plus Regular Flat Rate Envelope, per piece	12.72
Commercial Plus Legal Flat Rate Envelope, per piece	12.72

Commercial Plus Flat Rate Box

	($)
Commercial Plus Flat Rate Box, per piece	*39.95*

Pickup on Demand Service

Add price specified for Parcel Post Pickup On Demand service (section 1405.6) for each Pickup On Demand stop.

Sunday/Holiday Delivery

Add $12.50 for requesting Sunday or holiday delivery.

2110 Priority Mail

* * *

2110.2 Size and Weight Limitations

	Length	Height	Thickness	Weight
Minimum	large enough to accommodate postage, address, and other required elements on the address side			none
Maximum				70 pounds
Flat Rate Envelope	Sizes for Regular, Padded, and Legal: No smaller than 5 x 10 inches and no larger than 9.5 x 15 inches			
Flat Rate Box	Sizes: Large: Various sizes ~~that meet the criteria of a machinable parcel~~ as defined in the DMM. – not to exceed ~~1/2~~.5 cu. ft. Medium: Various sizes ~~that meet the criteria of a machinable parcel~~ as defined in the DMM. – not to exceed ~~1/3~~.35 cu. ft. Small: Various sizes ~~that meet the criteria of a machinable parcel~~ as defined in the DMM. – not to exceed ~~1/20~~.05 cu. ft.			
Regional Rate Box A	Various sizes ~~that meet the criteria of a machinable parcel~~ as defined in the DMM. - not to exceed .21 cu. ft.			15 pounds
Regional Rate Box B	Various sizes ~~that meet the criteria of a machinable parcel~~ as defined in the DMM. - not to exceed .41 cu. ft.			20 pounds
Regional Rate Box C	Various sizes as defined in the DMM. - not to exceed 1.25 cu. ft.			25 pounds
Commercial Plus Cubic	Various sizes ~~that meet the criteria of a machinable parcel~~ as defined in the DMM. - not to exceed .1 to .5 cu. ft.			20 pounds
Open and Distribute	Half Tray: 15 x 11.75 x 4.75 inches Full Tray: 25.875 x 11.75 x 4.75 inches EMM Tray: 12.375 x 6.4375 x 25.25 inches Flat Tub: 19.375 x 13.8125 x 12.25 inches			70 pounds
All Others	108 inches in combined length and girth			70 pounds

* * *

2110.4 Price Categories

The following price categories are available for the product specified in this section:

- Retail
  - Zone/Weight—Prices are based on weight and zone
  - Flat Rate Envelopes—Envelope provided or approved by the Postal Service
  - Flat Rate Boxes—Boxes provided or approved by the Postal Service
  - *Regional Rate Boxes*
  - Balloon Price—Applies to parcels in zones local through 4, weighing less than 20 pounds, and measuring between 84 and 108 inches in combined length and girth

○ Dimensional Weight—Applies to parcels in zones 5 through 8 that exceed one cubic foot

• Commercial Base—Available to mailers who use specifically authorized postage payment methods

○ Zone/Weight—Prices are based on weight and zone

○ Flat Rate Envelopes—Envelope provided or approved by the Postal Service

○ Flat Rate Boxes—Boxes provided or approved by the Postal Service

○ Regional Rate Boxes

○ Balloon Price—Applies to parcels in zones local through 4, weighing less than 20 pounds, and measuring between 84 and 108 inches in combined length and girth

○ Dimensional Weight—Applies to parcels in zones 5 through 8 that exceed one cubic foot

• Commercial Plus—Available to mailers who use specifically authorized postage payment methods and whose annual volume exceeds 75,000 pieces or 600 open and distribute containers for parcels, or 5,000 letter-sized pieces excluding the Padded Flat Rate Envelope

○ Zone/Weight—Prices are based on weight and zone

○ Flat Rate Envelopes—Envelope provided or approved by the Postal Service

○ Flat Rate Boxes—Boxes provided or approved by the Postal Service

○ Regional Rate Boxes

○ Balloon Price—Applies to parcels in zones local through 4, weighing less than 20 pounds, and measuring between 84 and 108 inches in combined length and girth

○ Dimensional Weight—Applies to parcels in zones 5 through 8 that exceed one cubic foot

○ Critical Mail—Prices are available to Commercial Plus customers who use specifically authorized postage payment methods and whose annual Priority Mail volume exceeds 5,000 pieces.

• Commercial Plus Cubic—Prices are available to customers who use specifically authorized postage payment methods and whose annual Priority Mail volume exceeds [*2*]150,000 pieces

○ Zone/Cubic Volume

• *Open and Distribute (PMOD)—Available to mailers who use specifically authorized postage payment methods*

• *Processing Facilities—Received at a designated processing facility, or other equivalent facility*

• *Half Tray*

• *Full Tray*

• *EMM Tray*

• *Flat Tub*

• *DDU—Received at a designated destination delivery unit, or other equivalent facility*

• *Half Tray*

• *Full Tray*

• *EMM Tray*

• *Flat Tub*

2110.5 Optional Features

The following additional postal services may be available in conjunction with the product specified in this section:

• Pickup on Demand Service

• Ancillary Services (1505)

○ Address Correction Service (1505.1)

○ Business Reply Mail (1505.3)

○ Certified Mail (1505.5.5)

○ Certificate of Mailing (1505.6)

○ Collect On Delivery (1505.7)

○ Delivery Confirmation (1505.8)

○ Insurance (1505.9)

○ Merchandise Return (1505.10)

○ Registered Mail (1505.12)

○ Return Receipt (1505.13)

○ Return Receipt for Merchandise (1505.14)

○ Restricted Delivery (1505.15)

○ Signature Confirmation (1505.17)

○ Special Handling (1505.18)

• Competitive Ancillary Services (2645)

○ Adult Signature Service (2645.1)

○ *Package Intercept Service (2645.2)*

2110.6 Prices

Retail Priority Mail Zone/Weight

Maximum weight (pounds)	Local, Zones 1 & 2 ($)	Zone 3 ($)	Zone 4 ($)	Zone 5 ($)	Zone 6 ($)	Zone 7 ($)	Zone 8 ($)
1	5.20	5.25	5.35	5.50	5.65	5.90	6.30
2	5.30	5.65	6.30	8.05	8.75	9.45	10.40
3	6.05	6.95	8.05	9.70	10.95	11.80	13.85
4	6.85	8.15	9.20	12.85	14.05	15.00	16.70
5	8.10	9.35	10.55	14.55	16.05	17.25	19.25
6	8.95	10.30	11.85	16.20	18.00	19.35	21.75
7	9.50	11.20	12.75	18.05	19.90	21.80	24.45
8	10.20	12.20	14.25	19.60	21.85	24.00	27.40
9	10.85	13.15	15.45	21.25	23.80	26.00	30.50
10	11.60	14.15	16.85	23.00	25.70	28.60	33.20
11	12.40	15.10	18.15	24.80	27.60	31.55	36.45
12	13.25	16.20	19.45	26.60	30.00	34.10	39.15
13	14.10	17.20	20.55	28.15	32.20	35.50	40.55
14	14.90	18.25	21.80	29.90	33.95	37.50	42.55
15	15.55	19.25	23.00	31.65	35.45	38.30	43.75
16	16.00	20.30	24.25	33.40	37.45	40.45	46.20
17	16.65	21.30	25.55	35.15	39.35	42.55	48.65
18	16.95	22.05	26.80	36.85	41.40	44.65	51.10
19	17.45	22.50	27.30	37.85	43.30	46.75	53.50
20	18.15	22.80	27.80	38.50	44.40	48.50	55.95
21	18.75	23.10	28.20	39.10	45.10	49.25	57.25
22	19.20	23.65	28.70	40.00	46.10	50.45	58.65
23	19.65	24.10	29.50	40.70	46.95	51.30	59.70
24	20.10	24.60	30.45	41.55	47.90	52.50	61.15
25	20.55	25.00	31.35	42.25	48.60	53.30	62.20
26	20.95	25.25	32.40	43.10	49.75	54.45	64.15
27	21.55	25.65	33.35	43.95	50.45	55.25	66.55
28	22.25	26.00	34.30	45.05	51.15	56.00	69.05
29	22.90	26.25	35.25	45.70	52.00	56.80	70.90
30	23.60	26.60	36.05	46.35	53.45	57.65	72.45
31	24.25	26.85	36.60	46.95	54.25	59.20	73.90
32	24.55	27.45	37.25	47.50	54.95	60.80	75.40

Maximum weight (pounds)	Local, Zones 1 & 2 ($)	Zone 3 ($)	Zone 4 ($)	Zone 5 ($)	Zone 6 ($)	Zone 7 ($)	Zone 8 ($)
33	24.90	28.20	38.15	48.15	55.70	62.45	76.80
34	25.15	28.95	39.15	49.15	57.30	64.00	78.25
35	25.45	29.65	39.70	50.20	58.85	65.65	79.60
36	25.75	30.50	40.20	51.30	60.35	66.80	80.95
37	26.00	31.05	40.80	52.20	61.90	68.30	82.25
38	26.25	31.85	41.30	53.25	63.65	69.85	83.60
39	26.50	32.50	41.80	54.35	65.15	71.70	84.85
40	26.85	33.20	42.35	55.50	66.20	73.30	86.05
41	27.10	33.85	42.80	56.00	67.30	74.85	87.25
42	27.30	34.50	43.30	57.20	68.50	75.85	88.45
43	27.60	35.05	43.70	58.50	70.15	76.80	89.60
44	27.80	35.60	44.25	59.70	71.30	77.70	90.65
45	28.00	36.00	44.60	61.05	72.05	78.60	91.75
46	28.20	36.30	45.05	62.20	72.85	79.40	92.85
47	28.45	36.55	45.45	63.60	73.60	80.30	93.90
48	28.65	36.90	45.85	64.85	74.55	81.10	94.90
49	28.85	37.15	46.25	66.05	75.55	81.90	95.85
50	29.00	37.40	46.55	67.35	76.60	82.95	96.85
51	29.15	37.70	46.95	68.45	77.65	84.15	97.75
52	29.50	37.95	47.30	69.00	78.45	85.45	98.90
53	30.00	38.20	47.60	69.55	79.10	86.80	100.20
54	30.40	38.40	47.95	70.10	79.70	88.10	101.60
55	30.90	38.65	48.20	70.60	80.30	89.45	102.95
56	31.35	38.85	48.50	71.10	80.85	90.75	103.90
57	31.80	39.05	48.80	71.50	81.45	92.10	104.70
58	32.30	39.20	49.10	72.00	81.90	93.35	105.45
59	32.80	39.40	49.30	72.40	82.40	93.95	106.25
60	33.20	39.60	49.80	72.80	82.85	94.50	107.00
61	33.70	39.75	50.70	73.15	83.30	95.05	108.45
62	34.10	39.85	51.35	73.50	83.70	95.50	110.20
63	34.75	40.05	52.15	73.90	84.15	95.95	111.95
64	35.10	40.15	52.95	74.20	84.50	96.40	113.65
65	35.55	40.25	53.65	74.45	84.80	96.85	115.40
66	36.00	40.40	54.50	74.80	85.20	97.15	117.10
67	36.55	40.50	55.40	75.05	85.50	97.55	118.65
68	37.00	40.60	56.15	75.25	86.55	97.90	119.90
69	37.50	40.65	56.80	75.50	87.60	98.20	121.20
70	37.90	40.75	57.75	75.70	88.65	98.60	122.50

Retail Pickup On Demand Service

Add price specified for Parcel Post Pickup On Demand service (section 1405.6) for each Pickup On Demand stop.

Retail Flat Rate Envelopes [1]

	($)
Retail Regular Flat Rate Envelope, per piece	5.15
Retail Legal Flat Rate Envelope, per piece	5.30
Retail Padded Flat Rate Envelope, per piece	5.30

Retail Flat Rate Boxes [2]

Size	Delivery to domestic address ($)	Delivery to APO/FPO/DPO address ($)
Small Flat Rate Box	5.35	5.35
Medium Flat Rate Boxes	11.35	11.35

[1] The price for Regular, Legal, or Padded Flat Rate Envelopes also applies to sales of Regular, Legal, or Padded Flat Rate Envelopes, respectively, marked with Forever postage, at the time the envelopes are purchased.

[2] The price for Small, Medium, or Large Flat Rate Boxes also applies to sales of Small, Medium, or Large Flat Rate Boxes, respectively, marked with Forever postage, at the time the boxes are purchased.

Size	Delivery to domestic address ($)	Delivery to APO/FPO/DPO address ($)
Large Flat Rate Boxes	15.45	13.45

Retail Balloon Price

In Zones 1–4 (including local), parcels weighing less than 20 pounds but measuring more than 84 inches in combined length and girth (but not more than 108 inches) are charged the applicable price for a 20-pound parcel.

Retail Dimensional Weight

In Zones 5–8, parcels exceeding one cubic foot are priced at the actual weight or the dimensional weight, whichever is greater.

For box-shaped parcels, the dimensional weight (pounds) is calculated by multiplying the length (inches) times the width (inches) times the height (inches) of the parcel, and dividing by 194.

For irregular-shaped parcels (parcels not appearing box-shaped), the dimensional weight (pounds) is calculated by multiplying the length (inches) times the width (inches) times the height (inches) at the associated maximum cross-sections of the parcel, dividing by 194, and multiplying by an adjustment factor of 0.785.

Regional Rate Boxes

Size	*Local, Zones 1 & 2 ($)*	*Zone 3 ($)*	*Zone 4 ($)*	*Zone 5 ($)*	*Zone 6 ($)*	*Zone 7 ($)*	*Zone 8 ($)*
A	5.79	5.91	6.41	8.01	8.70	9.40	10.37
B	6.65	7.73	8.93	11.55	13.49	14.48	16.21
C	*15.19*	*19.48*	*23.41*	*32.27*	*36.41*	*39.74*	*45.77*

Commercial Base Priority Mail Zone/Weight

Maximum weight (pounds)	Local, Zones 1 & 2 ($)	Zone 3 ($)	Zone 4 ($)	Zone 5 ($)	Zone 6 ($)	Zone 7 ($)	Zone 8 ($)
1	4.90	4.97	5.14	5.34	5.51	5.78	6.20
2	5.04	5.16	5.66	7.26	7.95	8.65	9.62
3	5.24	6.05	7.14	8.71	10.20	11.06	12.82
4	5.90	6.98	8.18	10.80	12.74	13.73	15.46
5	6.91	8.10	9.32	12.50	14.54	15.80	17.88
6	7.74	9.04	10.52	14.22	16.31	18.00	20.47
7	8.25	9.86	11.34	16.13	18.03	20.32	23.00
8	8.86	10.72	12.87	17.73	19.81	22.34	25.83
9	9.24	11.55	13.72	19.10	21.58	24.23	28.73
10	9.95	12.42	14.93	20.70	23.30	26.63	31.26
11	10.77	13.28	16.13	22.32	25.03	28.98	33.86
12	11.52	14.22	17.30	23.96	27.27	31.33	36.33
13	12.23	15.11	18.23	25.25	29.29	32.62	37.61
14	12.94	16.03	19.34	26.82	30.89	34.45	39.48
15	13.52	16.92	20.42	28.39	32.13	35.08	40.50
16	13.92	17.83	21.53	29.95	33.94	37.05	42.77
17	14.44	18.73	22.66	31.52	35.66	38.99	45.02
18	14.72	19.35	23.76	33.06	37.53	40.90	47.28
19	15.15	19.76	24.23	33.95	39.24	42.82	49.51
20	15.78	20.02	24.68	34.53	40.24	44.42	51.80
21	16.31	20.30	25.04	34.82	40.56	44.83	52.47
22	16.47	20.50	25.46	35.11	40.87	45.23	53.14
23	16.86	20.91	25.88	35.71	41.62	45.98	54.08
24	17.27	21.37	26.70	36.48	42.48	47.06	55.40
25	17.65	21.71	27.52	37.08	43.10	47.77	56.36
26	18.00	21.93	28.41	37.85	44.12	48.80	58.11
27	18.52	22.25	29.28	38.58	44.74	49.53	60.30
28	19.10	22.54	30.08	39.59	45.35	50.20	62.56
29	19.68	22.78	30.92	40.12	46.11	50.92	64.23
30	20.29	23.10	31.64	40.70	47.39	51.67	65.62
31	20.82	23.31	32.13	41.21	48.11	53.08	66.95
32	21.08	23.84	32.67	41.71	48.74	54.51	68.32
33	21.39	24.47	33.48	42.26	49.41	55.97	69.57
34	21.60	25.13	34.33	43.16	50.83	57.37	70.89
35	21.85	25.75	34.82	44.07	52.19	58.84	72.12
36	22.13	26.47	35.29	45.03	53.51	59.88	73.34
37	22.34	26.95	35.79	45.84	54.90	61.23	74.52
38	22.56	27.62	36.25	46.74	56.46	62.60	75.74

Maximum weight (pounds)	Local, Zones 1 & 2 ($)	Zone 3 ($)	Zone 4 ($)	Zone 5 ($)	Zone 6 ($)	Zone 7 ($)	Zone 8 ($)
39	22.78	28.23	36.68	47.71	57.79	64.28	76.89
40	23.04	28.84	37.14	48.71	58.71	65.70	77.96
41	23.26	29.35	37.54	49.15	59.70	67.09	79.05
42	23.45	29.95	38.00	50.19	60.75	68.00	80.14
43	23.70	30.43	38.37	51.34	62.21	68.84	81.18
44	23.87	30.93	38.82	52.42	63.22	69.65	82.12
45	24.05	31.24	39.14	53.60	63.90	70.45	83.12
46	24.22	31.50	39.54	54.60	64.61	71.17	84.12
47	24.44	31.72	39.90	55.85	65.27	71.98	85.06
48	24.61	32.03	40.22	56.92	66.11	72.69	85.98
49	24.80	32.26	40.58	57.96	67.00	73.42	86.82
50	24.92	32.48	40.84	59.10	67.94	74.35	87.75
51	25.28	32.75	41.21	60.11	68.86	75.43	88.56
52	25.65	32.92	41.48	60.54	69.57	76.60	89.61
53	26.11	33.15	41.75	61.05	70.15	77.82	90.78
54	26.47	33.31	42.07	61.56	70.67	78.97	92.05
55	26.89	33.57	42.30	61.96	71.21	80.19	93.27
56	27.30	33.74	42.58	62.42	71.69	81.35	94.22
57	27.71	33.91	42.84	62.78	72.24	82.56	95.08
58	28.13	34.04	43.06	63.18	72.64	83.68	95.83
59	28.53	34.23	43.25	63.56	73.08	84.21	96.52
60	28.89	34.40	43.80	63.92	73.47	84.71	97.22
61	29.34	34.53	44.60	64.24	73.88	85.19	98.53
62	29.72	34.62	45.21	64.51	74.22	85.62	100.12
63	30.22	34.74	45.91	64.88	74.62	86.02	101.70
64	30.53	34.83	46.61	65.14	74.94	86.41	103.28
65	30.95	34.93	47.21	65.37	75.20	86.81	104.87
66	31.36	35.06	47.96	65.65	75.55	87.07	106.41
67	31.82	35.15	48.75	65.87	75.83	87.45	107.82
68	32.19	35.24	49.40	66.06	76.77	87.87	108.95
69	32.64	35.29	50.01	66.29	77.69	88.27	110.13
70	33.00	35.37	50.80	66.46	78.62	88.62	111.30

Commercial Pickup On Demand Service

Add price specified for Parcel Post Pickup On Demand service (section 1405.6) for each Pickup On Demand stop.

Commercial Base Flat Rate Envelope

	($)
Commercial Base Regular Flat Rate Envelope, per piece	4.90
Commercial Base Padded Flat Rate Envelope, per piece	5.10
Commercial Base Legal Flat Rate Envelope, per piece	5.10

Commercial Base Flat Rate Box

Size	Delivery to domestic address ($)	Delivery to APO/FPO/DPO address ($)
Small Flat Rate Box	5.15	5.15
Regular Flat Rate Boxes	10.85	10.85
Large Flat Rate Boxes	14.65	12.65

Commercial Base Balloon Price

In Zones 1–4 (including local), parcels weighing less than 20 pounds but measuring more than 84 inches in combined length and girth (but not more than 108 inches) are charged the applicable price for a 20-pound parcel.

Commercial Base Dimensional Weight

In Zones 5–8, parcels exceeding one cubic foot are priced at the actual weight or the dimensional weight, whichever is greater.

For box-shaped parcels, the dimensional weight (pounds) is calculated by multiplying the length (inches) times the width (inches) times the height (inches) of the parcel, and dividing by 194.

For irregular-shaped parcels (parcels not appearing box-shaped), the dimensional weight (pounds) is calculated by multiplying the length (inches) times the width (inches) times the height (inches) at the associated maximum cross-sections of the parcel,

dividing by 194, and multiplying by an adjustment factor of 0.785.

Regional Rate Boxes

Size	Local, Zones 1 & 2 ($)	Zone 3 ($)	Zone 4 ($)	Zone 5 ($)	Zone 6 ($)	Zone 7 ($)	Zone 8 ($)
A	5.04	5.16	5.66	7.26	7.95	8.65	9.62
B	5.90	6.98	8.18	10.80	12.74	13.73	15.46
C	*14.44*	*18.73*	*22.66*	*31.52*	*35.66*	*38.99*	*45.02*

Maximum weight (pounds)	Local, zones 1 & 2 ($)	Zone 3 ($)	Zone 4 ($)	Zone 5 ($)	Zone 6 ($)	Zone 7 ($)	Zone 8 ($)
0.5	4.39	4.45	4.54	4.73	4.91	5.10	5.38
1	4.80	4.93	5.10	5.24	5.42	5.61	5.99
2	4.95	5.12	5.56	6.85	7.34	7.92	8.57
3	5.06	5.85	6.70	8.27	9.72	10.65	11.95
4	5.63	6.68	7.79	10.09	11.81	13.02	14.81
5	6.27	7.62	8.55	11.79	13.69	15.18	17.46
6	7.14	8.83	10.17	13.91	15.35	17.51	19.43
7	7.85	9.79	11.29	15.89	17.06	19.69	22.20
8	8.30	10.17	12.58	17.35	18.51	21.60	24.91
9	8.52	10.88	13.42	18.72	20.04	23.50	27.72
10	9.03	11.72	14.15	19.94	21.70	25.57	30.27
11	9.45	12.01	14.97	20.71	23.05	26.97	31.35
12	9.86	12.62	15.80	21.87	24.84	28.36	32.70
13	10.12	12.93	16.26	23.08	26.63	29.50	33.83
14	10.47	13.50	16.99	24.12	28.06	31.19	35.52
15	10.93	14.10	17.81	24.85	28.70	31.51	36.27
16	11.29	14.58	18.37	25.37	29.35	32.22	37.20
17	11.63	15.07	18.75	26.02	30.14	33.01	38.15
18	11.89	15.54	19.10	26.54	30.72	33.65	39.07
19	12.29	15.89	19.41	27.17	31.45	34.51	40.05
20	12.59	16.14	19.78	27.63	32.05	35.16	40.92
21	12.95	16.36	20.09	28.10	32.58	35.78	41.73
22	13.26	16.66	20.39	28.73	33.30	36.59	42.76
23	13.55	16.87	20.96	29.22	33.89	37.25	43.50
24	13.85	17.07	21.59	29.84	34.59	38.11	44.59
25	14.17	17.32	22.31	30.32	35.13	38.68	45.35
26	14.46	17.53	23.02	30.94	35.90	39.48	46.80
27	14.86	17.78	23.72	31.37	36.43	40.08	48.53
28	15.34	17.98	24.32	31.77	36.92	40.67	50.32
29	15.78	18.19	25.05	32.20	37.39	41.20	51.93
30	16.29	18.46	25.70	32.65	37.93	41.79	53.68
31	16.69	18.61	26.44	33.04	38.40	42.32	55.44
32	17.14	19.06	27.11	33.46	38.94	43.34	57.17
33	17.60	19.58	27.71	33.88	39.41	44.57	58.86
34	18.06	20.09	28.45	34.60	40.57	45.80	60.59
35	18.51	20.61	29.02	35.34	41.69	47.03	62.32
36	18.97	21.11	29.49	36.13	42.74	48.31	64.05
37	19.42	21.57	29.97	36.80	43.86	49.54	65.77
38	19.67	22.08	30.41	37.53	45.08	50.72	67.51
39	19.91	22.55	30.82	38.28	46.18	52.02	69.29
40	20.29	22.99	31.29	39.07	47.23	53.18	70.91
41	20.71	23.44	31.70	39.43	48.35	54.47	72.63
42	21.10	23.92	32.13	40.27	49.41	55.75	74.36
43	21.52	24.32	32.54	41.16	50.64	56.98	76.12
44	21.90	24.80	32.95	42.11	51.68	58.26	77.83
45	22.27	25.25	33.31	43.00	52.81	59.51	79.55
46	22.69	25.72	33.97	43.82	53.92	60.73	81.27
47	23.09	26.17	34.61	44.77	55.14	62.02	82.96
48	23.51	26.52	35.37	45.66	56.26	63.29	84.44
49	23.88	26.85	35.73	46.51	57.26	64.59	85.29
50	24.21	27.08	36.06	47.40	58.37	65.81	86.36
51	24.69	27.35	36.70	48.35	59.48	67.04	87.28
52	25.02	27.59	37.41	49.23	60.70	68.28	88.13
53	25.50	27.86	38.04	50.12	61.76	69.56	89.00
54	25.82	28.05	38.67	51.07	62.82	70.74	89.85
55	26.24	28.32	39.45	51.95	63.93	71.91	90.61
56	26.64	28.52	40.08	52.78	65.14	73.20	91.41
57	27.06	28.79	40.70	53.63	66.21	74.47	92.23
58	27.42	28.98	41.42	54.58	67.32	75.09	92.98
59	27.86	29.18	42.11	55.48	68.01	75.52	93.64
60	28.19	29.39	42.73	56.41	68.39	76.76	94.36

Maximum weight (pounds)	Local, zones 1 & 2 ($)	Zone 3 ($)	Zone 4 ($)	Zone 5 ($)	Zone 6 ($)	Zone 7 ($)	Zone 8 ($)
61	28.66	29.58	43.49	57.25	69.19	77.94	95.61
62	28.99	29.86	44.13	58.21	69.63	79.14	97.13
63	29.45	30.31	44.81	59.15	70.02	79.96	98.66
64	29.79	30.49	45.47	60.04	70.46	80.45	100.20
65	30.22	30.57	46.06	60.63	70.82	80.88	101.77
66	30.59	30.92	46.79	60.88	71.26	81.28	103.25
67	31.02	31.35	47.55	61.52	71.61	81.74	104.87
68	31.40	31.73	48.20	62.40	71.90	82.14	106.31
69	31.84	32.16	48.81	63.35	72.31	82.56	107.88
70	32.20	32.54	49.57	63.63	72.60	82.88	109.40

Commercial Pickup On Demand Service

Add price specified for Parcel Post Pickup On Demand service (section 1405.6) for each Pickup On Demand stop.

Commercial Plus Flat Rate Envelope

	($)
Commercial Plus Regular Flat Rate Envelope, per piece	4.80
Commercial Plus Padded Flat Rate Envelope, per piece	4.99
Commercial Plus Legal Flat Rate Envelope, per piece	4.99

Commercial Plus Flat Rate Box

Size	Delivery to domestic address ($)	Delivery to APO/FPO/DPO address ($)
Small Flat Rate Box	5.10	5.10
Medium Flat Rate Boxes	10.25	10.25
Large Flat Rate Boxes	14.10	12.10

Commercial Plus Balloon Price

In Zones 1–4 (including local), parcels weighing less than 20 pounds but measuring more than 84 inches in combined length and girth (but not more than 108 inches) are charged the applicable price for a 20-pound parcel.

Commercial Plus Dimensional Weight

In Zones 5–8, parcels exceeding one cubic foot are priced at the actual weight or the dimensional weight, whichever is greater.

For box-shaped parcels, the dimensional weight (pounds) is calculated by multiplying the length (inches) times the width (inches) times the height (inches) of the parcel, and dividing by 194.

For irregular-shaped parcels (parcels not appearing box-shaped), the dimensional weight (pounds) is calculated by multiplying the length (inches) times the width (inches) times the height (inches) at the associated maximum cross-sections of the parcel, dividing by 194, and multiplying by an adjustment factor of 0.785.

Critical Mail

Shape	Local, zones 1 & 2 ($)	Zone 3 ($)	Zone 4 ($)	Zone 5 ($)	Zone 6 ($)	Zone 7 ($)	Zone 8 ($)
Letter	3.50	3.50	3.50	3.50	3.50	3.50	3.50
Flat	4.25	4.25	4.25	4.25	4.25	4.25	4.25

Regional Rate Boxes

Size	Local, zones 1 & 2 ($)	Zone 3 ($)	Zone 4 ($)	Zone 5 ($)	Zone 6 ($)	Zone 7 ($)	Zone 8 ($)
A	5.04	5.16	5.66	7.26	7.95	8.65	9.62
B	5.90	6.98	8.18	10.80	12.74	13.73	15.46
C	*14.44*	*18.73*	*22.66*	*31.52*	*35.66*	*38.99*	*45.02*

Commercial Plus Cubic

Maximum cubic feet	Local, zones 1 & 2 ($)	Zone 3 ($)	Zone 4 ($)	Zone 5 ($)	Zone 6 ($)	Zone 7 ($)	Zone 8 ($)
0.10	4.39	4.45	4.54	4.73	4.91	5.10	5.38
0.20	4.86	4.98	5.15	5.30	5.44	5.61	6.05
0.30	5.09	5.47	6.05	7.46	8.29	8.99	9.88
0.40	5.30	6.17	7.10	8.88	10.43	11.44	12.89
0.50	6.02	7.22	8.27	11.02	12.86	14.20	16.24

Commercial Pickup On Demand Service

Add price specified for Parcel Post Pickup On Demand service (section 1405.6) for each Pickup On Demand stop.

Open and Distribute (PMOD)

a. *DDU*

Container	*Local, zones 1 & 2 ($)*	*Zone 3 ($)*	*Zone 4 ($)*	*Zone 5 ($)*	*Zone 6 ($)*	*Zone 7 ($)*	*Zone 8 ($)*
Half Tray	*7.26*	*8.52*	*10.37*	*14.09*	*16.58*	*17.61*	*18.20*
Full Tray	*8.68*	*11.12*	*13.93*	*20.48*	*25.15*	*25.31*	*26.41*
EMM Tray	*8.93*	*11.39*	*14.32*	*22.41*	*27.33*	*27.84*	*29.13*
Flat Tub	*14.14*	*15.95*	*22.80*	*31.14*	*37.94*	*46.05*	*50.80*

b. *Processing Facilities*

Container	*Local, zones 1 & 2 ($)*	*Zone 3 ($)*	*Zone 4 ($)*	*Zone 5 ($)*	*Zone 6 ($)*	*Zone 7 ($)*	*Zone 8 ($)*
Half Tray	*5.39*	*6.77*	*8.36*	*12.20*	*14.79*	*16.36*	*16.97*
Full Tray	*6.43*	*8.70*	*11.13*	*17.75*	*22.30*	*22.64*	*23.72*
EMM Tray	*6.59*	*8.79*	*11.63*	*19.61*	*24.46*	*25.15*	*26.43*
Flat Tub	*10.27*	*12.52*	*18.50*	*27.83*	*34.84*	*42.40*	*47.22*

2115 Parcel Select

2115.1 Description

* * * * *

c. Undeliverable-as-addressed Parcel Select pieces will be forwarded on request of the addressee or forwarded or returned on request of the mailer, subject to the applicable Parcel Select ~~Barcoded~~ Nonpresort price, plus $3.00, when forwarded or returned. Pieces which combine Parcel Select matter with First-Class Mail or Standard Mail matter will be forwarded or returned if undeliverable-as-addressed, as specified in the Domestic Mail Manual.

* * * * *

2115.2 Size and Weight Limitations

Parcel Select

	Length	Height	Thickness	Weight
Minimum	Large enough to accommodate postage, address, and other required elements on the address side			None.
Maximum	130 inches in combined length and girth			70 pounds.

Lightweight

	Length	Height	Thickness	Weight
Minimum	*Large enough to accommodate postage, address, and other required elements on the address side*			*None.*
Maximum	*108 inches in combined length and girth*			*< 16 ounces.*

Regional Ground

	Length	**Height**	**Thickness**	**Weight**
Minimum	Large enough to accommodate postage, address, and other required elements on the address side			None
Maximum	~~.35 cubic feet~~Various sizes that meet the criteria of a machinable parcel as defined in the DMM. - not to exceed 4.5 cu. ft.			5 pounds

2115.3 Minimum Volume Requirements

	Minimum Volume Requirements
~~Barcoded~~ Nonpresort — PC Postage	None
~~Barcoded~~ Nonpresort — All Other Postage Payment Methods	50 pieces per mailing
Lightweight	200 pieces or 50 pounds per mailing
Regional Ground	10,000 pieces per year
All Other Parcel Select	50 pieces per mailing

2115.4 Price Categories

Destination Entered

- DDU—Entered at a designated destination delivery unit, or other equivalent facility
  - DDU
  - Balloon Price
  - Oversized
  - Forwarding and Returns
- DSCF—Entered at a designated destination processing and distribution center or facility, or other equivalent facility
  - Machinable — 5-Digit
  - Nonmachinable — 3-Digit, 5-Digit
  - Balloon Price
  - Oversized
  - Forwarding and Returns
- DNDC—Entered at a designated destination network distribution center, auxiliary service facility, or other equivalent facility
  - Machinable
  - Nonmachinable
  - Balloon Price
  - Oversized
  - Forwarding and Returns

Non-Destination Entered

- ONDC Presort – Entered at the origin network distribution center
  - ~~Machinable Barcoded~~
  - ~~Machinable Nonbarcoded and Nonmachinable~~
  - Balloon Price
  - Oversized
  - Forwarding and Returns

- NDC Presort – Entered at a designated facility
  - ~~Machinable Barcoded~~
  - ~~Machinable Nonbarcoded and Nonmachinable~~
  - Balloon Price
  - Oversized
  - Forwarding and Returns

- ~~Barcoded~~ Nonpresort
  - ~~Machinable~~
  - Balloon Price
  - Oversized
  - Forwarding and Returns

- *Machinable Lightweight*
  - *5-Digit DDU, DSCF, and DNDC entry levels Commercial eligible*
  - *NDC DNDC and Origin entry levels Commercial eligible*
  - *Mixed NDC Origin entry level Commercial eligible*
- *Irregular Lightweight (Do not meet the machinability requirements for machinable parcels.)*
  - *5-Digit DDU, DSCF, and DNDC entry levels Commercial eligible*
  - *SCF DSCF and DNDC entry levels Commercial eligible*
  - *NDC DNDC and Origin entry levels Commercial eligible*
  - *Mixed NDC Origin entry level Commercial eligible*
- Regional Ground
  - OSCF
  - ONDC

2115.5 Optional Features

The following additional postal services may be available in conjunction with the product specified in this section:

- Pickup On Demand Service
- Ancillary Services (1505)
  - Address Correction Service (1505.1)
  - Certificate of Mailing (1505.6)
  - Collect On Delivery (1505.7)
  - Delivery Confirmation (1505.8)
  - Insurance (1505.9)
  - Return Receipt (1505.13)
  - Return Receipt for Merchandise (1505.14)
  - Restricted Delivery (1505.15)
  - Signature Confirmation (1505.17)
  - Special Handling (1505.18)
- Competitive Ancillary Services (2645)
  - Adult Signature Service (2645.1)
  - *Package Intercept Service (2645.2)*

2115.6 Prices

Destination Entered—DDU

a. DDU

Maximum weight (pounds)	DDU ($)
1	2.02
2	2.02
3	2.04
4	2.06
5	2.08
6	2.10
7	2.13
8	2.16
9	2.19
10	2.22
11	2.25
12	2.28
13	2.31
14	2.34
15	2.38
16	2.42
17	2.47
18	2.51
19	2.56
20	2.60
21	2.65
22	2.69
23	2.74
24	2.78
25	2.83
26	2.87
27	2.92
28	2.96
29	3.01
30	3.05
31	3.10
32	3.14
33	3.19
34	3.23
35	3.28
36	3.32
37	3.37
38	3.41
39	3.46
40	3.50
41	3.55
42	3.59
43	3.64
44	3.68
45	3.73
46	3.77
47	3.82
48	3.86
49	3.91
50	3.95
51	4.00
52	4.04
53	4.09
54	4.13
55	4.18
56	4.22
57	4.27
58	4.31
59	4.36
60	4.40
61	4.45
62	4.49
63	4.54
64	4.58
65	4.63
66	4.67
67	4.72
68	4.76
69	4.81

Maximum weight (pounds)	DDU ($)
70	4.85
Oversized	7.62

b. Balloon Price

Pieces exceeding 84 inches in length and girth combined (but not more than 108 inches) and weighing less than 20 pounds are subject to a price equal to that for a 20-pound parcel for the zone to which the parcel is addressed.

c. Oversized Pieces

Regardless of weight, any piece that measures more than 108 inches (but not more than 130 inches) in length plus girth must pay the oversized price.

d. Forwarding and Returns

Parcel Select pieces that are forwarded on request of the addressee or forwarded or returned on request of the mailer will be subject to the applicable Parcel Select ~~Barcoded~~ Nonpresort price, plus $3.00, when forwarded or returned.

Destination Entered—DSCF

a. DSCF—5-Digit Machinable

Maximum weight (pounds)	DSCF 3-digit ($)	DSCF 5-digit ($)
1	3.80	2.80
2	3.80	2.80
3	4.02	3.02
4	4.23	3.23
5	4.43	3.43
6	4.62	3.62
7	4.79	3.79
8	4.95	3.95
9	5.11	4.11
10	5.26	4.26
11	5.40	4.40
12	5.54	4.54
13	5.68	4.68
14	5.82	4.82
15	5.96	4.96
16	6.10	5.10
17	6.24	5.24
18	6.38	5.38
19	6.52	5.52
20	6.66	5.66
21	6.80	5.80
22	6.95	5.95
23	7.10	6.10
24	7.25	6.25
25	7.39	6.39
26	7.53	6.53
27	7.68	6.68
28	7.82	6.82
29	7.96	6.96
30	8.09	7.09
31	8.23	7.23
32	8.37	7.37
33	8.52	7.52
34	8.67	7.67
35	8.80	7.80
36	8.93	7.93
37	9.06	8.06
38	9.21	8.21
39	9.35	8.35
40	9.48	8.48
41	9.61	8.61
42	9.74	8.74
43	9.87	8.87
44	10.00	9.00
45	10.13	9.13
46	10.26	9.26
47	10.39	9.39
48	10.52	9.52
49	10.65	9.65
50	10.78	9.78
51	10.91	9.91
52	11.04	10.04
53	11.17	10.17
54	11.32	10.32
55	11.46	10.46
56	11.60	10.60
57	11.75	10.75
58	11.90	10.90
59	12.06	11.06
60	12.20	11.20
61	12.34	11.34
62	12.48	11.48
63	12.62	11.62
64	12.76	11.76
65	12.89	11.89
66	13.02	12.02
67	13.16	12.16
68	13.30	12.30
69	13.45	12.45
70	13.60	12.60
Oversized	17.17	17.17

c. Balloon Price

Pieces exceeding 84 inches in length and girth combined (but not more than 108 inches) and weighing less than 20 pounds are subject to a price equal to that for a 20-pound parcel for the zone to which the parcel is addressed.

d. Oversized Pieces

Regardless of weight, any piece that measures more than 108 inches (but not more than 130 inches) in length plus girth must pay the oversized price.

e. Forwarding and Returns

Parcel Select pieces that are forwarded on request of the addressee or forwarded or returned on request of the mailer will be subject to the applicable Parcel Select ~~Barcoded~~ Nonpresort price, plus $3.00, when forwarded or returned.

Destination Entered—DNDC

a. DNDC—Machinable

Maximum weight (pounds)	DNDC Zones 1 & 2 ($)	DNDC Zone 3 ($)	DNDC Zone 4 ($)	DNDC Zone 5 ($)
1	3.67	4.60	5.49	6.38
2	3.67	4.60	5.49	6.38

Maximum weight (pounds)	DNDC Zones 1 & 2 ($)	DNDC Zone 3 ($)	DNDC Zone 4 ($)	DNDC Zone 5 ($)
3	3.96	5.38	6.62	7.34
4	4.24	6.04	7.46	8.12
5	4.51	6.66	8.03	8.82
6	4.77	7.16	8.65	9.47
7	5.02	7.71	9.28	10.13
8	5.27	8.27	9.88	10.77
9	5.52	8.79	10.47	11.34
10	5.77	9.34	11.04	11.93
11	6.02	9.87	11.39	12.34
12	6.27	10.34	11.61	12.60
13	6.52	10.78	11.87	12.90
14	6.77	11.13	12.09	13.10
15	7.01	11.48	12.31	13.32
16	7.25	11.87	12.68	13.75
17	7.49	12.06	12.91	13.93
18	7.72	12.28	13.12	14.16
19	7.95	12.52	13.34	14.38
20	8.17	12.71	13.47	14.51
21	8.40	13.08	13.85	14.90
22	8.63	13.32	14.11	15.12
23	8.87	13.60	14.36	15.36
24	9.10	13.83	14.61	15.56
25	9.33	14.01	14.79	15.72
26	9.56	14.28	15.09	15.92
27	9.79	14.58	15.36	16.16
28	10.02	14.80	15.57	16.35
29	10.25	15.01	15.79	16.59
30	10.46	15.26	16.03	16.84
31	10.68	15.69	16.50	17.35
32	10.90	15.94	16.76	17.58
33	11.12	16.17	16.98	17.84
34	11.34	16.39	17.28	18.15
35	11.56	16.56	17.48	18.33

b. DNDC—Non-Machinable

Maximum weight (pounds)	DNDC Zones 1 & 2 ($)	DNDC Zone 3 ($)	DNDC Zone 4 ($)	DNDC Zone 5 ($)
1	6.03	6.96	7.85	8.74
2	6.03	6.96	7.85	8.74
3	6.32	7.74	8.98	9.70
4	6.60	8.40	9.82	10.48
5	6.87	9.02	10.39	11.18
6	7.13	9.52	11.01	11.83
7	7.38	10.07	11.64	12.49
8	7.63	10.63	12.24	13.13
9	7.88	11.15	12.83	13.70
10	8.13	11.70	13.40	14.29
11	8.38	12.23	13.75	14.70
12	8.63	12.70	13.97	14.96
13	8.88	13.14	14.23	15.26
14	9.13	13.49	14.45	15.46
15	9.37	13.84	14.67	15.68
16	9.61	14.23	15.04	16.11
17	9.85	14.42	15.27	16.29
18	10.08	14.64	15.48	16.52
19	10.31	14.88	15.70	16.74
20	10.53	15.07	15.83	16.87
21	10.76	15.44	16.21	17.26

Maximum weight (pounds)	DNDC Zones 1 & 2 ($)	DNDC Zone 3 ($)	DNDC Zone 4 ($)	DNDC Zone 5 ($)
22	10.99	15.68	16.47	17.48
23	11.23	15.96	16.72	17.72
24	11.46	16.19	16.97	17.92
25	11.69	16.37	17.15	18.08
26	11.92	16.64	17.45	18.26
27	12.15	16.94	17.72	18.52
28	12.38	17.16	17.93	18.71
29	12.61	17.37	18.15	18.95
30	12.82	17.62	18.39	19.20
31	13.04	18.05	18.86	19.71
32	13.26	18.30	19.12	19.94
33	13.48	18.53	19.34	20.20
34	13.70	18.75	19.64	20.51
35	13.92	18.92	19.84	20.69
36	14.14	19.14	20.11	20.98
37	14.36	19.37	20.39	21.27
38	14.58	19.60	20.65	21.56
39	14.80	19.84	20.91	21.83
40	15.02	20.03	21.19	22.11
41	15.24	20.31	21.38	22.37
42	15.46	20.47	21.55	22.59
43	15.68	20.67	21.71	22.86
44	15.89	20.94	21.94	23.16
45	16.10	21.13	22.31	23.40
46	16.31	21.59	22.72	24.05
47	16.52	21.79	22.89	24.66
48	16.73	22.06	23.10	25.34
49	16.93	22.32	23.32	26.01
50	17.13	22.45	23.40	26.58
51	17.33	22.67	23.63	27.29
52	17.53	22.98	23.83	28.05
53	17.75	23.19	24.00	28.81
54	17.98	23.39	24.21	29.58
55	18.21	23.59	24.43	30.00
56	18.45	23.78	24.65	30.26
57	18.69	23.92	24.80	30.60
58	18.94	24.18	25.03	30.95
59	19.18	24.35	25.24	31.25
60	19.42	24.49	25.39	31.55
61	19.65	24.65	25.54	31.76
62	19.88	24.86	25.82	32.10
63	20.11	25.02	26.07	32.37
64	20.34	25.22	26.36	32.73
65	20.57	25.40	26.60	32.99
66	20.80	25.61	26.90	33.36
67	21.03	25.75	27.16	33.61
68	21.26	25.96	27.40	33.96
69	21.48	26.11	27.65	34.22
70	21.70	26.33	27.96	34.56
Oversized	26.99	38.10	51.61	53.64

c. Balloon Price

Pieces exceeding 84 inches in length and girth combined (but not more than 108 inches) and weighing less than 20 pounds are subject to a price equal to that for a 20-pound parcel for the zone to which the parcel is addressed.

d. Oversized Pieces

Regardless of weight, any piece that measures more than 108 inches (but not more than 130 inches) in length plus girth must pay the oversized price.

e. Forwarding and Returns

Parcel Select pieces that are forwarded on request of the addressee or forwarded or returned on request of the mailer will be subject to the applicable Parcel Select ~~Barcoded~~ Nonpresort price, plus $3.00, when forwarded or returned.

Non-Destination Entered—ONDC Presort

~~a. Machinable Barcoded ONDC Presort~~

~~Maximum Weight (pounds)~~	~~Zones 1 & 2 ($)~~	~~Zone 3 ($)~~	~~Zone 4 ($)~~	~~Zone 5 ($)~~	~~Zone 6 ($)~~	~~Zone 7 ($)~~	~~Zone 8 ($)~~
~~1~~	~~3.92~~	~~3.97~~	~~4.07~~	~~4.12~~	~~4.17~~	~~4.23~~	~~4.31~~
~~2~~	~~4.02~~	~~4.37~~	~~5.02~~	~~6.29~~	~~6.84~~	~~7.34~~	~~8.17~~
~~3~~	~~4.74~~	~~5.59~~	~~6.58~~	~~7.38~~	~~8.09~~	~~8.58~~	~~9.58~~
~~4~~	~~5.45~~	~~6.46~~	~~7.47~~	~~8.54~~	~~9.52~~	~~10.25~~	~~11.27~~
~~5~~	~~6.24~~	~~7.56~~	~~8.47~~	~~9.38~~	~~10.29~~	~~11.20~~	~~12.10~~
~~6~~	~~6.85~~	~~8.15~~	~~9.00~~	~~9.85~~	~~10.70~~	~~11.55~~	~~12.93~~
~~7~~	~~7.39~~	~~8.85~~	~~9.48~~	~~10.65~~	~~11.37~~	~~11.87~~	~~13.76~~
~~8~~	~~8.01~~	~~9.36~~	~~10.21~~	~~11.05~~	~~11.90~~	~~12.74~~	~~14.59~~
~~9~~	~~8.57~~	~~9.97~~	~~10.84~~	~~11.71~~	~~12.57~~	~~13.44~~	~~15.42~~
~~10~~	~~9.17~~	~~10.64~~	~~11.57~~	~~12.50~~	~~13.43~~	~~14.35~~	~~16.25~~
~~11~~	~~9.62~~	~~11.22~~	~~12.24~~	~~13.26~~	~~14.29~~	~~15.31~~	~~17.08~~
~~12~~	~~10.15~~	~~11.80~~	~~12.87~~	~~13.94~~	~~15.01~~	~~16.07~~	~~17.99~~
~~13~~	~~10.32~~	~~12.11~~	~~13.29~~	~~14.47~~	~~15.70~~	~~16.83~~	~~18.89~~
~~14~~	~~10.49~~	~~12.41~~	~~13.71~~	~~15.01~~	~~16.39~~	~~17.58~~	~~19.79~~
~~15~~	~~10.66~~	~~12.72~~	~~14.13~~	~~15.54~~	~~17.05~~	~~18.35~~	~~20.70~~
~~16~~	~~10.84~~	~~13.02~~	~~14.55~~	~~16.08~~	~~17.67~~	~~19.09~~	~~21.61~~
~~17~~	~~11.36~~	~~13.33~~	~~14.97~~	~~16.61~~	~~18.30~~	~~19.85~~	~~22.51~~
~~18~~	~~11.88~~	~~13.64~~	~~15.39~~	~~17.14~~	~~18.90~~	~~20.62~~	~~23.42~~
~~19~~	~~12.07~~	~~13.94~~	~~15.81~~	~~17.68~~	~~19.52~~	~~21.37~~	~~24.31~~
~~20~~	~~12.26~~	~~14.25~~	~~16.23~~	~~18.21~~	~~20.13~~	~~22.12~~	~~25.23~~
~~21~~	~~12.46~~	~~14.55~~	~~16.65~~	~~18.75~~	~~20.79~~	~~22.90~~	~~26.15~~
~~22~~	~~12.65~~	~~14.86~~	~~17.07~~	~~19.28~~	~~21.45~~	~~23.67~~	~~27.08~~
~~23~~	~~12.84~~	~~15.16~~	~~17.49~~	~~19.82~~	~~22.12~~	~~24.45~~	~~28.00~~
~~24~~	~~13.03~~	~~15.47~~	~~17.91~~	~~20.35~~	~~22.78~~	~~25.22~~	~~28.93~~
~~25~~	~~13.22~~	~~15.78~~	~~18.33~~	~~20.89~~	~~23.44~~	~~26.00~~	~~29.85~~

~~a. Machinable Barcoded ONDC Presort (Continued)~~

~~Maximum Weight (pounds)~~	~~Zones 1 & 2 ($)~~	~~Zone 3 ($)~~	~~Zone 4 ($)~~	~~Zone 5 ($)~~	~~Zone 6 ($)~~	~~Zone 7 ($)~~	~~Zone 8 ($)~~
~~26~~	~~13.43~~	~~16.10~~	~~18.77~~	~~21.44~~	~~24.10~~	~~26.77~~	~~30.78~~
~~27~~	~~13.64~~	~~16.43~~	~~19.21~~	~~21.99~~	~~24.77~~	~~27.55~~	~~31.70~~
~~28~~	~~13.86~~	~~16.75~~	~~19.64~~	~~22.54~~	~~25.43~~	~~28.32~~	~~32.62~~
~~29~~	~~14.07~~	~~17.07~~	~~20.08~~	~~23.09~~	~~26.09~~	~~29.10~~	~~33.55~~
~~30~~	~~14.28~~	~~17.40~~	~~20.52~~	~~23.64~~	~~26.75~~	~~29.87~~	~~34.47~~
~~31~~	~~14.54~~	~~17.72~~	~~20.95~~	~~24.19~~	~~27.42~~	~~30.65~~	~~35.40~~
~~32~~	~~14.85~~	~~18.05~~	~~21.39~~	~~24.74~~	~~28.08~~	~~31.42~~	~~36.32~~
~~33~~	~~15.17~~	~~18.37~~	~~21.83~~	~~25.28~~	~~28.74~~	~~32.20~~	~~37.25~~
~~34~~	~~15.48~~	~~18.70~~	~~22.27~~	~~25.83~~	~~29.40~~	~~32.97~~	~~38.17~~
~~35~~	~~15.79~~	~~19.02~~	~~22.70~~	~~26.38~~	~~30.06~~	~~33.75~~	~~39.10~~

~~b.~~a. ~~Machinable Nonbarcoded and Nonmachinable~~ ONDC Presort

Maximum Weight (pounds)	Zones 1 & 2 ($)	Zone 3 ($)	Zone 4 ($)	Zone 5 ($)	Zone 6 ($)	Zone 7 ($)	Zone 8 ($)
1	4.05	4.10	4.20	4.25	4.30	4.35	4.40
2	4.10	4.40	5.05	6.32	6.87	7.37	8.20
3	4.77	5.62	6.61	7.47	8.29	8.80	10.07
4	5.48	6.49	7.50	8.73	9.64	10.29	11.38
5	6.30	7.59	8.50	9.47	10.32	11.23	12.13
6	7.03	8.45	9.03	9.95	10.73	11.58	12.96
7	7.52	9.20	9.53	10.78	11.40	11.98	13.79
8	8.04	9.40	10.24	11.14	11.93	12.77	14.62
9	8.60	10.00	10.87	11.74	12.60	13.47	15.45
10	9.20	10.67	11.60	12.53	13.46	14.38	16.28
11	9.65	11.25	12.27	13.29	14.32	15.34	17.11
12	10.18	11.83	12.90	13.97	15.04	16.10	18.02
13	10.35	12.14	13.32	14.50	15.73	16.86	18.92
14	10.52	12.44	13.74	15.04	16.42	17.61	19.82
15	10.69	12.75	14.16	15.57	17.08	18.38	20.73
16	10.87	13.05	14.58	16.11	17.70	19.12	21.64
17	11.39	13.36	15.00	16.64	18.33	19.88	22.54
18	11.91	13.67	15.42	17.17	18.93	20.65	23.45
19	12.10	13.97	15.84	17.71	19.55	21.40	24.34
20	12.29	14.28	16.26	18.24	20.16	22.15	25.26
21	12.49	14.58	16.68	18.78	20.82	22.93	26.18
22	12.68	14.89	17.10	19.31	21.48	23.70	27.11
23	12.87	15.19	17.52	19.85	22.15	24.48	28.03
24	13.06	15.50	17.94	20.38	22.81	25.25	28.96
25	13.25	15.81	18.36	20.92	23.47	26.03	29.88

~~b.~~a. ~~Machinable Nonbarcoded and Nonmachinable~~ ONDC Presort (Continued)

Maximum Weight (pounds)	Zones 1 & 2 ($)	Zone 3 ($)	Zone 4 ($)	Zone 5 ($)	Zone 6 ($)	Zone 7 ($)	Zone 8 ($)
26	13.46	16.13	18.80	21.47	24.13	26.80	30.81
27	13.67	16.46	19.24	22.02	24.80	27.58	31.73
28	13.89	16.78	19.67	22.57	25.46	28.35	32.65
29	14.10	17.10	20.11	23.12	26.12	29.13	33.58
30	14.39	17.43	20.55	23.67	26.78	29.90	34.50
31	14.71	17.75	20.98	24.22	27.45	30.68	35.43
32	15.02	18.08	21.42	24.77	28.11	31.45	36.35
33	15.32	18.40	21.86	25.31	28.77	32.23	37.28
34	15.67	18.73	22.30	25.86	29.43	33.00	38.20
35	15.97	19.05	22.73	26.41	30.09	33.78	39.13
36	16.11	19.38	23.17	26.96	30.76	34.55	40.05
37	16.30	19.70	23.61	27.51	31.42	35.32	40.98
38	16.45	20.03	24.05	28.06	32.08	36.10	41.90
39	16.60	20.35	24.48	28.61	32.74	36.87	42.83
40	16.75	20.68	24.92	29.16	33.41	37.65	43.75
41	16.92	21.00	25.36	29.71	34.07	38.42	44.68
42	17.08	21.33	25.80	30.26	34.73	39.20	45.60
43	17.23	21.65	26.23	30.81	35.39	39.97	46.53
44	17.38	21.98	26.67	31.36	36.06	40.75	47.45
45	17.53	22.30	27.11	31.91	36.72	41.52	48.38
46	17.72	22.63	27.55	32.46	37.38	42.30	49.30
47	17.92	22.95	27.98	33.01	38.04	43.07	50.23
48	18.13	23.28	28.42	33.56	38.71	43.85	51.15
49	18.35	23.60	28.86	34.11	39.37	44.62	52.08
50	18.56	23.93	29.29	34.66	40.03	45.40	53.00

~~b.~~a. ~~Machinable Nonbarcoded and Nonmachinable~~ ONDC Presort (Continued)

Maximum Weight (pounds)	Zones 1 & 2 ($)	Zone 3 ($)	Zone 4 ($)	Zone 5 ($)	Zone 6 ($)	Zone 7 ($)	Zone 8 ($)
51	18.77	24.11	29.54	35.01	40.61	46.17	53.93
52	18.98	24.29	29.78	35.36	41.18	46.95	54.85
53	19.20	24.47	30.03	35.71	41.75	47.72	55.78
54	19.41	24.65	30.27	36.05	42.33	48.50	56.70
55	19.62	24.83	30.52	36.40	42.90	49.27	57.63
56	19.83	25.01	30.76	36.75	43.48	50.05	58.55
57	20.05	25.19	31.01	37.10	44.05	50.82	59.48
58	20.26	25.38	31.25	37.44	44.63	51.60	60.40
59	20.47	25.56	31.49	37.79	45.20	52.37	61.33
60	20.68	25.74	31.74	38.14	45.78	53.15	62.25
61	20.90	25.92	31.98	38.49	46.35	53.92	63.18
62	21.11	26.10	32.23	38.83	46.93	54.70	64.10
63	21.32	26.28	32.47	39.18	47.50	55.47	65.03
64	21.53	26.46	32.72	39.53	48.08	56.25	65.95
65	21.75	26.64	32.96	39.88	48.65	57.02	66.88
66	21.96	26.82	33.20	40.23	49.23	57.80	67.80
67	22.17	27.00	33.45	40.57	49.80	58.57	68.72
68	22.38	27.19	33.69	40.92	50.38	59.34	69.65
69	22.59	27.37	33.94	41.27	50.95	60.12	70.57
70	22.81	27.55	34.18	41.62	51.53	60.89	71.50
Oversized	64.98	73.07	74.68	76.92	97.33	105.42	113.51

c. Balloon Price

Pieces exceeding 84 inches in length and girth combined (but not more than 108 inches) and weighing less than 20 pounds are subject to a price equal to that for a 20-pound parcel for the zone to which the parcel is addressed.

d. Oversized Pieces

Regardless of weight, any piece that measures more than 108 inches (but not more than 130 inches) in length plus girth must pay the oversized price.

e. Forwarding and Returns

Parcel Select pieces that are forwarded on request of the addressee or forwarded or returned on request of the mailer will be subject to the applicable Parcel Select ~~Barcoded~~ Nonpresort price, plus $3.00, when forwarded or returned.

BILLING CODE 7710–12–C

Non-Destination Entered — NDC Presort

~~a. Machinable Barcoded NDC Presort~~

~~Maximum Weight (pounds)~~	~~Zones 1 & 2 ($)~~	~~Zone 3 ($)~~	~~Zone 4 ($)~~	~~Zone 5 ($)~~	~~Zone 6 ($)~~	~~Zone 7 ($)~~	~~Zone 8 ($)~~
~~1~~	~~4.84~~	~~4.89~~	~~4.99~~	~~5.04~~	~~5.09~~	~~5.15~~	~~5.23~~
~~2~~	~~4.94~~	~~5.29~~	~~5.94~~	~~7.21~~	~~7.76~~	~~8.26~~	~~9.09~~
~~3~~	~~5.66~~	~~6.51~~	~~7.50~~	~~8.30~~	~~9.01~~	~~9.50~~	~~10.50~~
~~4~~	~~6.37~~	~~7.38~~	~~8.39~~	~~9.46~~	~~10.44~~	~~11.17~~	~~12.19~~
~~5~~	~~7.16~~	~~8.48~~	~~9.39~~	~~10.30~~	~~11.21~~	~~12.12~~	~~13.02~~
~~6~~	~~7.77~~	~~9.07~~	~~9.92~~	~~10.77~~	~~11.62~~	~~12.47~~	~~13.85~~
~~7~~	~~8.31~~	~~9.77~~	~~10.40~~	~~11.57~~	~~12.29~~	~~12.79~~	~~14.68~~
~~8~~	~~8.93~~	~~10.28~~	~~11.13~~	~~11.97~~	~~12.82~~	~~13.66~~	~~15.51~~
~~9~~	~~9.49~~	~~10.89~~	~~11.76~~	~~12.63~~	~~13.49~~	~~14.36~~	~~16.34~~
~~10~~	~~10.09~~	~~11.56~~	~~12.49~~	~~13.42~~	~~14.35~~	~~15.27~~	~~17.17~~
~~11~~	~~10.54~~	~~12.14~~	~~13.16~~	~~14.18~~	~~15.21~~	~~16.23~~	~~18.00~~
~~12~~	~~11.07~~	~~12.72~~	~~13.79~~	~~14.86~~	~~15.93~~	~~16.99~~	~~18.91~~
~~13~~	~~11.24~~	~~13.03~~	~~14.21~~	~~15.39~~	~~16.62~~	~~17.75~~	~~19.81~~
~~14~~	~~11.41~~	~~13.33~~	~~14.63~~	~~15.93~~	~~17.31~~	~~18.50~~	~~20.71~~
~~15~~	~~11.58~~	~~13.64~~	~~15.05~~	~~16.46~~	~~17.97~~	~~19.27~~	~~21.62~~
~~16~~	~~11.76~~	~~13.94~~	~~15.47~~	~~17.00~~	~~18.59~~	~~20.01~~	~~22.53~~
~~17~~	~~12.28~~	~~14.25~~	~~15.89~~	~~17.53~~	~~19.22~~	~~20.77~~	~~23.43~~
~~18~~	~~12.80~~	~~14.56~~	~~16.31~~	~~18.06~~	~~19.82~~	~~21.54~~	~~24.34~~
~~19~~	~~12.99~~	~~14.86~~	~~16.73~~	~~18.60~~	~~20.44~~	~~22.29~~	~~25.23~~
~~20~~	~~13.18~~	~~15.17~~	~~17.15~~	~~19.13~~	~~21.05~~	~~23.04~~	~~26.15~~
~~21~~	~~13.38~~	~~15.47~~	~~17.57~~	~~19.67~~	~~21.71~~	~~23.82~~	~~27.07~~
~~22~~	~~13.57~~	~~15.78~~	~~17.99~~	~~20.20~~	~~22.37~~	~~24.59~~	~~28.00~~
~~23~~	~~13.76~~	~~16.08~~	~~18.41~~	~~20.74~~	~~23.04~~	~~25.37~~	~~28.92~~
~~24~~	~~13.95~~	~~16.39~~	~~18.83~~	~~21.27~~	~~23.70~~	~~26.14~~	~~29.85~~
~~25~~	~~14.14~~	~~16.70~~	~~19.25~~	~~21.81~~	~~24.36~~	~~26.92~~	~~30.77~~

~~a. Machinable Barcoded NDC Presort (Continued)~~

~~Maximum Weight (pounds)~~	~~Zones 1 & 2 ($)~~	~~Zone 3 ($)~~	~~Zone 4 ($)~~	~~Zone 5 ($)~~	~~Zone 6 ($)~~	~~Zone 7 ($)~~	~~Zone 8 ($)~~
~~26~~	~~14.35~~	~~17.02~~	~~19.69~~	~~22.36~~	~~25.02~~	~~27.69~~	~~31.70~~
~~27~~	~~14.56~~	~~17.35~~	~~20.13~~	~~22.91~~	~~25.69~~	~~28.47~~	~~32.62~~
~~28~~	~~14.78~~	~~17.67~~	~~20.56~~	~~23.46~~	~~26.35~~	~~29.24~~	~~33.54~~
~~29~~	~~14.99~~	~~17.99~~	~~21.00~~	~~24.01~~	~~27.01~~	~~30.02~~	~~34.47~~
~~30~~	~~15.20~~	~~18.32~~	~~21.44~~	~~24.56~~	~~27.67~~	~~30.79~~	~~35.39~~
~~31~~	~~15.46~~	~~18.64~~	~~21.87~~	~~25.11~~	~~28.34~~	~~31.57~~	~~36.32~~
~~32~~	~~15.77~~	~~18.97~~	~~22.31~~	~~25.66~~	~~29.00~~	~~32.34~~	~~37.24~~
~~33~~	~~16.09~~	~~19.29~~	~~22.75~~	~~26.20~~	~~29.66~~	~~33.12~~	~~38.17~~
~~34~~	~~16.40~~	~~19.62~~	~~23.19~~	~~26.75~~	~~30.32~~	~~33.89~~	~~39.09~~
~~35~~	~~16.71~~	~~19.94~~	~~23.62~~	~~27.30~~	~~30.98~~	~~34.67~~	~~40.02~~

~~b.~~a. ~~Machinable Nonbarcoded and Nonmachinable~~ NDC Presort

Maximum Weight (pounds)	Zones 1 & 2 ($)	Zone 3 ($)	Zone 4 ($)	Zone 5 ($)	Zone 6 ($)	Zone 7 ($)	Zone 8 ($)
1	4.97	5.02	5.12	5.17	5.22	5.27	5.32
2	5.02	5.32	5.97	7.24	7.79	8.29	9.12
3	5.69	6.54	7.53	8.39	9.21	9.72	10.99
4	6.40	7.41	8.42	9.65	10.56	11.21	12.30
5	7.22	8.51	9.42	10.39	11.24	12.15	13.05
6	7.95	9.37	9.95	10.87	11.65	12.50	13.88
7	8.44	10.12	10.45	11.70	12.32	12.90	14.71
8	8.96	10.32	11.16	12.06	12.85	13.69	15.54
9	9.52	10.92	11.79	12.66	13.52	14.39	16.37
10	10.12	11.59	12.52	13.45	14.38	15.30	17.20
11	10.57	12.17	13.19	14.21	15.24	16.26	18.03
12	11.10	12.75	13.82	14.89	15.96	17.02	18.94
13	11.27	13.06	14.24	15.42	16.65	17.78	19.84
14	11.44	13.36	14.66	15.96	17.34	18.53	20.74
15	11.61	13.67	15.08	16.49	18.00	19.30	21.65
16	11.79	13.97	15.50	17.03	18.62	20.04	22.56
17	12.31	14.28	15.92	17.56	19.25	20.80	23.46
18	12.83	14.59	16.34	18.09	19.85	21.57	24.37
19	13.02	14.89	16.76	18.63	20.47	22.32	25.26
20	13.21	15.20	17.18	19.16	21.08	23.07	26.18
21	13.41	15.50	17.60	19.70	21.74	23.85	27.10
22	13.60	15.81	18.02	20.23	22.40	24.62	28.03
23	13.79	16.11	18.44	20.77	23.07	25.40	28.95
24	13.98	16.42	18.86	21.30	23.73	26.17	29.88
25	14.17	16.73	19.28	21.84	24.39	26.95	30.80

~~b.~~ a. ~~Machinable Nonbarcoded and Nonmachinable~~NDC Presort (Continued)

Maximum Weight (pounds)	Zones 1 & 2 ($)	Zone 3 ($)	Zone 4 ($)	Zone 5 ($)	Zone 6 ($)	Zone 7 ($)	Zone 8 ($)
26	14.38	17.05	19.72	22.39	25.05	27.72	31.73
27	14.59	17.38	20.16	22.94	25.72	28.50	32.65
28	14.81	17.70	20.59	23.49	26.38	29.27	33.57
29	15.02	18.02	21.03	24.04	27.04	30.05	34.50
30	15.31	18.35	21.47	24.59	27.70	30.82	35.42
31	15.63	18.67	21.90	25.14	28.37	31.60	36.35
32	15.94	19.00	22.34	25.69	29.03	32.37	37.27
33	16.24	19.32	22.78	26.23	29.69	33.15	38.20
34	16.59	19.65	23.22	26.78	30.35	33.92	39.12
35	16.89	19.97	23.65	27.33	31.01	34.70	40.05
36	17.03	20.30	24.09	27.88	31.68	35.47	40.97
37	17.22	20.62	24.53	28.43	32.34	36.24	41.90
38	17.37	20.95	24.97	28.98	33.00	37.02	42.82
39	17.52	21.27	25.40	29.53	33.66	37.79	43.75
40	17.67	21.60	25.84	30.08	34.33	38.57	44.67
41	17.84	21.92	26.28	30.63	34.99	39.34	45.60
42	18.00	22.25	26.72	31.18	35.65	40.12	46.52
43	18.15	22.57	27.15	31.73	36.31	40.89	47.45
44	18.30	22.90	27.59	32.28	36.98	41.67	48.37
45	18.45	23.22	28.03	32.83	37.64	42.44	49.30
46	18.64	23.55	28.47	33.38	38.30	43.22	50.22
47	18.84	23.87	28.90	33.93	38.96	43.99	51.15
48	19.05	24.20	29.34	34.48	39.63	44.77	52.07
49	19.27	24.52	29.78	35.03	40.29	45.54	53.00
50	19.48	24.85	30.21	35.58	40.95	46.32	53.92

~~b.~~ a. ~~Machinable Nonbarcoded and Nonmachinable~~NDC Presort (Continued)

Maximum Weight (pounds)	Zones 1 & 2 ($)	Zone 3 ($)	Zone 4 ($)	Zone 5 ($)	Zone 6 ($)	Zone 7 ($)	Zone 8 ($)
51	19.69	25.03	30.46	35.93	41.53	47.09	54.85
52	19.90	25.21	30.70	36.28	42.10	47.87	55.77
53	20.12	25.39	30.95	36.63	42.67	48.64	56.70
54	20.33	25.57	31.19	36.97	43.25	49.42	57.62
55	20.54	25.75	31.44	37.32	43.82	50.19	58.55
56	20.75	25.93	31.68	37.67	44.40	50.97	59.47
57	20.97	26.11	31.93	38.02	44.97	51.74	60.40
58	21.18	26.30	32.17	38.36	45.55	52.52	61.32
59	21.39	26.48	32.41	38.71	46.12	53.29	62.25
60	21.60	26.66	32.66	39.06	46.70	54.07	63.17
61	21.82	26.84	32.90	39.41	47.27	54.84	64.10
62	22.03	27.02	33.15	39.75	47.85	55.62	65.02
63	22.24	27.20	33.39	40.10	48.42	56.39	65.95
64	22.45	27.38	33.64	40.45	49.00	57.17	66.87
65	22.67	27.56	33.88	40.80	49.57	57.94	67.80
66	22.88	27.74	34.12	41.15	50.15	58.72	68.72
67	23.09	27.92	34.37	41.49	50.72	59.49	69.64
68	23.30	28.11	34.61	41.84	51.30	60.26	70.57
69	23.51	28.29	34.86	42.19	51.87	61.04	71.49
70	23.73	28.47	35.10	42.54	52.45	61.81	72.42
Oversized	65.90	73.99	75.60	77.84	98.25	106.34	114.43

BILLING CODE 7710–12–C

c. Balloon Price

Pieces exceeding 84 inches in length and girth combined (but not more than 108 inches) and weighing less than 20 pounds are subject to a price equal to that for a 20-pound parcel for the zone to which the parcel is addressed.

d. Oversized Pieces

Regardless of weight, any piece that measures more than 108 inches (but not more than 130 inches) in length plus girth must pay the oversized price.

e. Forwarding and Returns

Parcel Select pieces that are forwarded on request of the addressee or forwarded or returned on request of the mailer will be subject to the applicable Parcel Select ~~Barcoded~~ Nonpresort price, plus $3.00, when forwarded or returned.

Non-Destination Entered — ~~Barcoded~~ Nonpresort

a. ~~Machinable Barcoded~~ Nonpresort

Maximum Weight (pounds)	Zones 1 & 2 ($)	Zone 3 ($)	Zone 4 ($)	Zone 5 ($)	Zone 6 ($)	Zone 7 ($)	Zone 8 ($)
1	5.20	5.25	5.35	5.40	5.45	5.50	5.55
2	5.25	5.52	6.17	7.45	7.99	8.49	9.32
3	5.89	6.74	7.73	8.62	9.44	9.95	11.22
4	6.60	7.61	8.62	9.88	10.79	11.44	12.53
5	7.45	8.71	9.62	10.62	11.44	12.35	13.25
6	8.18	9.60	10.16	11.10	11.85	12.70	14.08
7	8.67	10.35	10.68	11.93	12.52	13.13	14.91
8	9.16	10.55	11.36	12.29	13.07	13.89	15.74
9	9.72	11.12	11.99	12.86	13.72	14.59	16.57
10	10.32	11.79	12.72	13.65	14.58	15.50	17.40
11	10.77	12.37	13.39	14.41	15.44	16.46	18.23
12	11.30	12.95	14.02	15.09	16.16	17.22	19.14
13	11.47	13.26	14.44	15.62	16.85	17.98	20.04
14	11.64	13.56	14.86	16.16	17.54	18.73	20.94
15	11.81	13.87	15.28	16.69	18.20	19.50	21.85
16	11.99	14.17	15.70	17.23	18.82	20.24	22.76
17	12.51	14.48	16.12	17.76	19.45	21.00	23.66
18	13.03	14.79	16.54	18.29	20.05	21.77	24.57
19	13.22	15.09	16.96	18.83	20.67	22.52	25.46
20	13.41	15.40	17.38	19.36	21.28	23.27	26.38
21	13.61	15.70	17.80	19.90	21.94	24.05	27.30
22	13.80	16.01	18.22	20.43	22.60	24.82	28.23
23	13.99	16.31	18.64	20.97	23.27	25.60	29.15
24	14.18	16.62	19.06	21.50	23.93	26.37	30.08
25	14.37	16.93	19.48	22.04	24.59	27.15	31.00

a. ~~Machinable Barcoded~~ Nonpresort (Continued)

Maximum Weight (pounds)	Zones 1 & 2 ($)	Zone 3 ($)	Zone 4 ($)	Zone 5 ($)	Zone 6 ($)	Zone 7 ($)	Zone 8 ($)
26	14.58	17.25	19.92	22.59	25.25	27.92	31.93
27	14.79	17.58	20.36	23.14	25.92	28.70	32.85
28	15.01	17.90	20.79	23.69	26.58	29.47	33.77
29	15.22	18.22	21.23	24.24	27.24	30.25	34.70
30	15.54	18.55	21.67	24.79	27.90	31.02	35.62
31	15.86	18.87	22.10	25.34	28.57	31.80	36.55
32	16.17	19.20	22.54	25.89	29.23	32.57	37.47
33	16.47	19.52	22.98	26.43	29.89	33.35	38.40
34	16.82	19.85	23.42	26.98	30.55	34.12	39.32
35	17.12	20.17	23.85	27.53	31.21	34.90	40.25
36	17.26	20.50	24.29	28.08	31.88	35.67	41.17
37	17.45	20.82	24.73	28.63	32.54	36.44	42.10
38	17.60	21.15	25.17	29.18	33.20	37.22	43.02
39	17.75	21.47	25.60	29.73	33.86	37.99	43.95
40	17.90	21.80	26.04	30.28	34.53	38.77	44.87
41	18.07	22.12	26.48	30.83	35.19	39.54	45.80
42	18.23	22.45	26.92	31.38	35.85	40.32	46.72
43	18.38	22.77	27.35	31.93	36.51	41.09	47.65
44	18.53	23.10	27.79	32.48	37.18	41.87	48.57
45	18.68	23.42	28.23	33.03	37.84	42.64	49.50
46	18.87	23.75	28.67	33.58	38.50	43.42	50.42
47	19.04	24.07	29.10	34.13	39.16	44.19	51.35
48	19.25	24.40	29.54	34.68	39.83	44.97	52.27
49	19.47	24.72	29.98	35.23	40.49	45.74	53.20
50	19.68	25.05	30.41	35.78	41.15	46.52	54.12

a. Nonpresort (Continued)

Maximum Weight (pounds)	Zones 1 & 2 ($)	Zone 3 ($)	Zone 4 ($)	Zone 5 ($)	Zone 6 ($)	Zone 7 ($)	Zone 8 ($)
51	*19.89*	*25.23*	*30.66*	*36.13*	*41.73*	*47.29*	*55.05*
52	*20.10*	*25.41*	*30.90*	*36.48*	*42.30*	*48.07*	*55.97*
53	*20.32*	*25.59*	*31.15*	*36.83*	*42.87*	*48.84*	*56.90*
54	*20.53*	*25.77*	*31.39*	*37.17*	*43.45*	*49.62*	*57.82*
55	*20.74*	*25.95*	*31.64*	*37.52*	*44.02*	*50.39*	*58.75*
56	*20.95*	*26.13*	*31.88*	*37.87*	*44.60*	*51.17*	*59.67*
57	*21.17*	*26.31*	*32.13*	*38.22*	*45.17*	*51.94*	*60.60*
58	*21.38*	*26.50*	*32.37*	*38.56*	*45.75*	*52.72*	*61.52*

Maximum Weight (pounds)	Zones 1 & 2 ($)	Zone 3 ($)	Zone 4 ($)	Zone 5 ($)	Zone 6 ($)	Zone 7 ($)	Zone 8 ($)
59	21.59	26.68	32.61	38.91	46.32	53.49	62.45
60	21.80	26.86	32.86	39.26	46.90	54.27	63.37
61	22.02	27.04	33.10	39.61	47.47	55.04	64.30
62	22.23	27.22	33.35	39.95	48.05	55.82	65.22
63	22.44	27.40	33.59	40.30	48.62	56.59	66.15
64	22.65	27.58	33.84	40.65	49.20	57.37	67.07
65	22.87	27.76	34.08	41.00	49.77	58.14	68.00
66	23.08	27.94	34.32	41.35	50.35	58.92	68.92
67	23.29	28.12	34.57	41.69	50.92	59.69	69.84
68	23.50	28.31	34.81	42.04	51.50	60.46	70.77
69	23.71	28.49	35.06	42.39	52.07	61.24	71.69
70	23.93	28.67	35.30	42.74	52.65	62.01	72.62
Oversized	61.80	64.65	65.94	67.89	90.92	96.82	107.16

b. Balloon Price

Pieces exceeding 84 inches in length and girth combined (but not more than 108 inches) and weighing less than 20 pounds are subject to a price equal to that for a 20-pound parcel for the zone to which the parcel is addressed.

c. *Oversized Pieces*

Regardless of weight, any piece that measures more than 108 inches (but not more than 130 inches) in length plus girth must pay the oversized price.

d. Forwarding and Returns

Parcel Select pieces that are forwarded on request of the addressee or forwarded or returned on request of the mailer will be subject to the applicable Parcel Select ~~Barcoded~~ Nonpresort price, plus $3.00, when forwarded or returned.

MACHINABLE LIGHTWEIGHT PARCELS

[Greater than 3.5 ounces]

	Entry Point/Sortation Level					
Maximum weight (ounces)	DDU/5-digit ($)	DSCF/5-digit ($)	DNDC/5-digit ($)	DNDC/NDC ($)	None/NDC ($)	None/Mixed NDC ($)
1	N/A	N/A	N/A	N/A	N/A	N/A
2	N/A	N/A	N/A	N/A	N/A	N/A
3	N/A	N/A	N/A	N/A	N/A	N/A
4	0.82	0.86	0.92	1.27	1.31	1.72
5	0.84	0.89	0.97	1.32	1.37	1.78
6	0.86	0.93	1.02	1.36	1.43	1.84
7	0.89	0.96	1.07	1.41	1.50	1.91
8	0.91	1.00	1.12	1.46	1.56	1.97
9	0.93	1.03	1.17	1.51	1.62	2.03
10	0.96	1.07	1.22	1.56	1.68	2.09
11	0.98	1.10	1.27	1.61	1.75	2.16
12	1.01	1.14	1.31	1.66	1.82	2.22
13	1.03	1.17	1.36	1.71	1.88	2.28
14	1.05	1.21	1.41	1.76	1.94	2.34
15	1.08	1.24	1.46	1.81	2.01	2.41
16	1.10	1.28	1.51	1.86	2.07	2.47

Irregular Lightweight Parcels

	Entry Point/Sortation Level							
Maximum weight (ounces)	DDU/5-digit ($)	DSCF/5-digit ($)	DNDC/5-digit ($)	DSCF/SCF ($)	DNDC/SCF ($)	DNDC/NDC ($)	None/NDC ($)	None/Mixed NDC ($)
1	0.80	0.83	0.88	0.87	0.92	1.36	1.39	1.79
2	0.80	0.83	0.88	0.87	0.92	1.36	1.39	1.79

	Entry Point/Sortation Level							
Maximum weight (ounces)	*DDU/5-digit ($)*	*DSCF/5-digit ($)*	*DNDC/5-digit ($)*	*DSCF/SCF ($)*	*DNDC/SCF ($)*	*DNDC/NDC ($)*	*None/NDC ($)*	*None/Mixed NDC ($)*
3	*0.80*	*0.83*	*0.88*	*0.87*	*0.92*	*1.36*	*1.39*	*1.79*
4	*0.82*	*0.86*	*0.92*	*0.90*	*0.96*	*1.40*	*1.44*	*1.85*
5	*0.84*	*0.89*	*0.97*	*0.93*	*1.01*	*1.45*	*1.50*	*1.91*
6	*0.86*	*0.93*	*1.02*	*0.97*	*1.06*	*1.49*	*1.56*	*1.97*
7	*0.89*	*0.96*	*1.07*	*1.00*	*1.11*	*1.54*	*1.63*	*2.04*
8	*0.91*	*1.00*	*1.12*	*1.04*	*1.16*	*1.59*	*1.69*	*2.10*
9	*0.93*	*1.03*	*1.17*	*1.07*	*1.21*	*1.64*	*1.75*	*2.16*
10	*0.96*	*1.07*	*1.22*	*1.11*	*1.26*	*1.69*	*1.81*	*2.22*
11	*0.98*	*1.10*	*1.27*	*1.14*	*1.30*	*1.74*	*1.88*	*2.29*
12	*1.01*	*1.14*	*1.31*	*1.18*	*1.35*	*1.79*	*1.95*	*2.35*
13	*1.03*	*1.17*	*1.36*	*1.21*	*1.40*	*1.84*	*2.01*	*2.41*
14	*1.05*	*1.21*	*1.41*	*1.25*	*1.45*	*1.89*	*2.07*	*2.47*
15	*1.08*	*1.24*	*1.46*	*1.28*	*1.50*	*1.94*	*2.14*	*2.54*
16	*1.10*	*1.28*	*1.51*	*1.32*	*1.55*	*1.99*	*2.20*	*2.60*

Regional Ground

a. OSCF

Weight (pounds)	Zones L, 1, 2, 3 ($)
1	4.03
2	4.03
3	4.85
4	5.18
5	5.43

b. ONDC

Weight (Pounds)	Zones L, 1, 2, 3 ($)	~~Zone 4 ($)~~	~~Zone 5 ($)~~	~~Zone 6 ($)~~	~~Zone 7 ($)~~	~~Zone 8 ($)~~
1	3.78	~~5.92~~	~~7.19~~	~~7.74~~	~~8.24~~	~~9.07~~
2	3.78	~~5.92~~	~~7.19~~	~~7.74~~	~~8.24~~	~~9.07~~
3	4.60	~~7.48~~	~~8.28~~	~~8.99~~	~~9.48~~	~~10.48~~
4	4.93	~~8.37~~	~~9.44~~	~~10.42~~	~~11.15~~	~~12.17~~
5	5.18	~~9.37~~	~~10.28~~	~~11.19~~	~~12.10~~	~~13.00~~

2120 Parcel Return Service

* * *

* * *

2120.4 Price Categories

- RNDC—Contains merchandise and is retrieved in bulk at a network distribution center, or other equivalent facility
  - ○ Machinable
  - ○ Nonmachinable
  - ○ Balloon Price
  - ○ Oversized
- *RSCF—Contains merchandise and is retrieved in bulk at a return sectional center facility, or other equivalent facility*
  - ○ *Machinable*
  - ○ *Nonmachinable*
  - ○ *Balloon Price*
  - ○ *Oversized*
- RDU—Contains merchandise and is retrieved in bulk at a designated destination delivery unit, or other equivalent facility
  - ○ Machinable
  - ○ Nonmachinable
  - ○ *Balloon Price*
  - ○ Oversized

2120.5 Optional Features

The following additional services may be available in conjunction with the product specified in this section:

- Ancillary Services (1505)
  - ○ Certificate of Mailing (1505.6)

2120.6 Prices

RNDC Entered

BILLING CODE 7710–12–P

a. Machinable RNDC

Maximum Weight (pounds)	RNDC ~~Zones 1 & 2~~ ($)	~~RNDC Zone 3 ($)~~	~~RNDC Zone 4 ($)~~	~~RNDC Zone 5 ($)~~
1	3.54	~~3.54~~	~~3.54~~	~~3.54~~
2	3.89	~~3.89~~	~~3.89~~	~~3.89~~
3	4.24	~~4.24~~	~~4.24~~	~~4.24~~
4	4.59	~~4.59~~	~~4.59~~	~~4.59~~
5	4.94	~~4.94~~	~~4.94~~	~~4.94~~
6	5.29	~~5.29~~	~~5.29~~	~~5.29~~
7	5.64	~~5.64~~	~~5.64~~	~~5.64~~
8	5.99	~~5.99~~	~~5.99~~	~~5.99~~
9	6.34	~~6.34~~	~~6.34~~	~~6.34~~
10	6.69	~~6.69~~	~~6.69~~	~~6.69~~
11	6.99	~~6.99~~	~~6.99~~	~~6.99~~
12	7.29	~~7.29~~	~~7.29~~	~~7.29~~
13	7.59	~~7.59~~	~~7.59~~	~~7.59~~
14	7.89	~~7.89~~	~~7.89~~	~~7.89~~
15	8.19	~~8.19~~	~~8.19~~	~~8.19~~
16	8.44	~~8.44~~	~~8.44~~	~~8.44~~
17	8.69	~~8.69~~	~~8.69~~	~~8.69~~
18	8.94	~~8.94~~	~~8.94~~	~~8.94~~
19	9.19	~~9.19~~	~~9.19~~	~~9.19~~
20	9.44	~~9.44~~	~~9.44~~	~~9.44~~
21	9.64	~~9.64~~	~~9.64~~	~~9.64~~
22	9.84	~~9.84~~	~~9.84~~	~~9.84~~
23	10.04	~~10.04~~	~~10.04~~	~~10.04~~
24	10.24	~~10.24~~	~~10.24~~	~~10.24~~
25	10.42	~~10.42~~	~~10.42~~	~~10.42~~

a. Machinable RNDC (Continued)

Maximum Weight (pounds)	RNDC ~~Zones 1 & 2~~ ($)	~~RNDC Zone 3 ($)~~	~~RNDC Zone 4 ($)~~	~~RNDC Zone 5 ($)~~
26	10.58	~~10.58~~	~~10.58~~	~~10.58~~
27	10.74	~~10.74~~	~~10.74~~	~~10.74~~
28	10.90	~~10.90~~	~~10.90~~	~~10.90~~
29	11.06	~~11.06~~	~~11.06~~	~~11.06~~
30	11.20	~~11.20~~	~~11.20~~	~~11.20~~
31	11.34	~~11.34~~	~~11.34~~	~~11.34~~
32	11.48	~~11.48~~	~~11.48~~	~~11.48~~
33	11.62	~~11.62~~	~~11.62~~	~~11.62~~
34	11.74	~~11.74~~	~~11.74~~	~~11.74~~
35	11.86	~~11.86~~	~~11.86~~	~~11.86~~

b. Nonmachinable RNDC

Maximum Weight (pounds)	RNDC ~~Zones 1 & 2~~ ($)	~~RNDC Zone 3 ($)~~	~~RNDC Zone 4 ($)~~	~~RNDC Zone 5 ($)~~
1	5.90	~~5.90~~	~~5.90~~	~~5.90~~
2	6.25	~~6.25~~	~~6.25~~	~~6.25~~
3	6.60	~~6.60~~	~~6.60~~	~~6.60~~
4	6.95	~~6.95~~	~~6.95~~	~~6.95~~
5	7.30	~~7.30~~	~~7.30~~	~~7.30~~
6	7.65	~~7.65~~	~~7.65~~	~~7.65~~
7	8.00	~~8.00~~	~~8.00~~	~~8.00~~
8	8.35	~~8.35~~	~~8.35~~	~~8.35~~
9	8.70	~~8.70~~	~~8.70~~	~~8.70~~
10	9.05	~~9.05~~	~~9.05~~	~~9.05~~
11	9.35	~~9.35~~	~~9.35~~	~~9.35~~
12	9.65	~~9.65~~	~~9.65~~	~~9.65~~
13	9.95	~~9.95~~	~~9.95~~	~~9.95~~
14	10.25	~~10.25~~	~~10.25~~	~~10.25~~
15	10.55	~~10.55~~	~~10.55~~	~~10.55~~
16	10.80	~~10.80~~	~~10.80~~	~~10.80~~
17	11.05	~~11.05~~	~~11.05~~	~~11.05~~
18	11.30	~~11.30~~	~~11.30~~	~~11.30~~
19	11.55	~~11.55~~	~~11.55~~	~~11.55~~
20	11.80	~~11.80~~	~~11.80~~	~~11.80~~
21	12.00	~~12.00~~	~~12.00~~	~~12.00~~
22	12.20	~~12.20~~	~~12.20~~	~~12.20~~
23	12.40	~~12.40~~	~~12.40~~	~~12.40~~
24	12.60	~~12.60~~	~~12.60~~	~~12.60~~
25	12.78	~~12.78~~	~~12.78~~	~~12.78~~

b. Nonmachinable RNDC (Continued)

Maximum Weight (pounds)	RNDC ~~Zones 1 & 2~~ ($)	~~RNDC Zone 3 ($)~~	~~RNDC Zone 4 ($)~~	~~RNDC Zone 5 ($)~~
26	12.94	~~12.94~~	~~12.94~~	~~12.94~~
27	13.10	~~13.10~~	~~13.10~~	~~13.10~~
28	13.26	~~13.26~~	~~13.26~~	~~13.26~~
29	13.42	~~13.42~~	~~13.42~~	~~13.42~~
30	13.56	~~13.56~~	~~13.56~~	~~13.56~~
31	13.70	~~13.70~~	~~13.70~~	~~13.70~~
32	13.84	~~13.84~~	~~13.84~~	~~13.84~~
33	13.98	~~13.98~~	~~13.98~~	~~13.98~~
34	14.10	~~14.10~~	~~14.10~~	~~14.10~~
35	14.22	~~14.22~~	~~14.22~~	~~14.22~~
36	14.34	~~14.34~~	~~14.34~~	~~14.34~~
37	14.46	~~14.46~~	~~14.46~~	~~14.46~~
38	14.56	~~14.56~~	~~14.56~~	~~14.56~~
39	14.66	~~14.66~~	~~14.66~~	~~14.66~~
40	14.76	~~14.76~~	~~14.76~~	~~14.76~~
41	14.84	~~14.84~~	~~14.84~~	~~14.84~~
42	14.92	~~14.92~~	~~14.92~~	~~14.92~~
43	15.00	~~15.00~~	~~15.00~~	~~15.00~~
44	15.08	~~15.08~~	~~15.08~~	~~15.08~~
45	15.16	~~15.16~~	~~15.16~~	~~15.16~~
46	15.24	~~15.24~~	~~15.24~~	~~15.24~~
47	15.32	~~15.32~~	~~15.32~~	~~15.32~~
48	15.39	~~15.39~~	~~15.39~~	~~15.39~~
49	15.46	~~15.46~~	~~15.46~~	~~15.46~~
50	15.53	~~15.53~~	~~15.53~~	~~15.53~~

b. Nonmachinable RNDC (Continued)

Maximum Weight (pounds)	RNDC ~~Zones 1 & 2~~ ($)	~~RNDC Zone 3 ($)~~	~~RNDC Zone 4 ($)~~	~~RNDC Zone 5 ($)~~
51	15.60	~~15.60~~	~~15.60~~	~~15.60~~
52	15.66	~~15.66~~	~~15.66~~	~~15.66~~
53	15.72	~~15.72~~	~~15.72~~	~~15.72~~
54	15.78	~~15.78~~	~~15.78~~	~~15.78~~
55	15.83	~~15.83~~	~~15.83~~	~~15.83~~
56	15.88	~~15.88~~	~~15.88~~	~~15.88~~
57	15.93	~~15.93~~	~~15.93~~	~~15.93~~
58	15.98	~~15.98~~	~~15.98~~	~~15.98~~
59	16.02	~~16.02~~	~~16.02~~	~~16.02~~
60	16.06	~~16.06~~	~~16.06~~	~~16.06~~
61	16.10	~~16.10~~	~~16.10~~	~~16.10~~
62	16.14	~~16.14~~	~~16.14~~	~~16.14~~
63	16.18	~~16.18~~	~~16.18~~	~~16.18~~
64	16.22	~~16.22~~	~~16.22~~	~~16.22~~
65	16.25	~~16.25~~	~~16.25~~	~~16.25~~
66	16.28	~~16.28~~	~~16.28~~	~~16.28~~
67	16.31	~~16.31~~	~~16.31~~	~~16.31~~
68	16.34	~~16.34~~	~~16.34~~	~~16.34~~
69	16.36	~~16.36~~	~~16.36~~	~~16.36~~
70	16.38	~~16.38~~	~~16.38~~	~~16.38~~
Oversized	34.20	~~34.20~~	~~34.20~~	~~34.20~~

BILLING CODE 7710–12–C

c. Balloon Price

RNDC entered pieces exceeding 84 inches in length and girth combined, but not more than 108 inches, and weighing less than 20 pounds are subject to a price equal to that for a 20-pound parcel for the zone to which the parcel is addressed.

d. Oversized Pieces

Regardless of weight, any piece that measures more than 108 inches (but not more than 130 inches) in length plus girth must pay the oversized price.

RSCF Entered

a. *Machinable RSCF*

Maximum weight (pounds)	*RSCF ($)*
1	*2.80*
2	*3.16*
3	*3.40*
4	*3.64*
5	*3.88*
6	*4.17*
7	*4.43*
8	*4.69*
9	*4.98*
10	*5.24*
11	*5.52*
12	*5.80*
13	*6.07*
14	*6.35*
15	*6.62*
16	*6.87*
17	*7.12*
18	*7.37*
19	*7.62*
20	*7.87*
21	*8.07*
22	*8.27*
23	*8.47*
24	*8.67*
25	*8.83*
26	*8.99*
27	*9.15*
28	*9.31*
29	*9.47*
30	*9.63*
31	*9.79*
32	*9.95*

Maximum weight (pounds)	*RSCF ($)*
33	*10.11*
34	*10.27*
35	*10.43*

Maximum weight (pounds)	*RSCF ($)*
1	*2.80*
2	*3.16*
3	*3.40*
4	*3.64*
5	*3.88*
6	*4.17*
7	*4.43*
8	*4.69*
9	*4.98*
10	*5.24*
11	*5.52*
12	*5.80*
13	*6.07*
14	*6.35*
15	*6.62*
16	*6.87*
17	*7.12*
18	*7.37*
19	*7.62*
20	*7.87*
21	*8.07*
22	*8.27*
23	*8.47*
24	*8.67*
25	*8.83*
26	*8.99*
27	*9.15*
28	*9.31*
29	*9.47*
30	*9.63*
31	*9.79*
32	*9.95*
33	*10.11*
34	*10.27*
35	*10.43*
36	*10.59*
37	*10.75*
38	*10.87*
39	*10.99*
40	*11.11*
41	*11.23*
42	*11.35*
43	*11.47*
44	*11.55*
45	*11.63*
46	*11.71*
47	*11.79*
48	*11.84*
49	*11.89*
50	*11.94*
51	*11.99*
52	*12.04*
53	*12.09*
54	*12.14*
55	*12.19*
56	*12.24*
57	*12.29*
58	*12.33*
59	*12.37*
60	*12.41*
61	*12.45*
62	*12.49*
63	*12.53*
64	*12.55*
65	*12.57*
66	*12.59*

Maximum weight (pounds)	*RSCF ($)*
67	*12.61*
68	*12.63*
69	*12.65*
70	*12.67*
Oversized	*24.31*

c. *Balloon Price*

RSCF entered pieces exceeding 84 inches in length and girth combined, but not more than 108 inches, and weighing less than 20 pounds are subject to a price equal to that for a 20-pound parcel for the zone to which the parcel is addressed.

d. *Oversized Pieces*

Regardless of weight, any piece that measures more than 108 inches (but not more than 130 inches) in length plus girth must pay the oversized price.

RDU Entered

a. Machinable RDU

Maximum weight (pounds)	RDU ($)
1	2.04
2	2.07
3	2.10
4	2.13
5	2.16
6	2.19
7	2.22
8	2.25
9	2.28
10	2.31
11	2.34
12	2.43
13	2.51
14	2.59
15	2.67
16	2.74
17	2.82
18	2.88
19	2.96
20	3.02
21	3.08
22	3.13
23	3.19
24	3.24
25	3.31
26	3.36
27	3.41
28	3.45
29	3.50
30	3.54
31	3.58
32	3.64
33	3.68
34	3.71
35	3.75

b. Nonmachinable RDU

Maximum weight (pounds)	RDU ($)
1	2.04
2	2.07
3	2.10
4	2.13
5	2.16
6	2.19
7	2.22
8	2.25
9	2.28
10	2.31
11	2.34
12	2.43
13	2.51
14	2.59
15	2.67
16	2.74
17	2.82
18	2.88
19	2.96
20	3.02
21	3.08
22	3.13
23	3.19
24	3.24
25	3.31
26	3.36
27	3.41
28	3.45
29	3.50
30	3.54
31	3.58
32	3.64
33	3.68
34	3.71
35	3.75
36	3.80
37	3.83
38	3.87
39	3.90
40	3.93
41	3.97
42	4.00
43	4.03
44	4.06
45	4.09
46	4.12
47	4.14
48	4.17
49	4.20
50	4.22
51	4.24
52	4.28
53	4.31
54	4.33
55	4.35
56	4.38
57	4.40
58	4.42
59	4.44
60	4.45
61	4.47
62	4.49
63	4.51
64	4.53
65	4.54
66	4.56
67	4.57
68	4.59
69	4.61
70	4.62
Oversized	7.91

c. Balloon Price

RDU entered pieces exceeding 84 inches in length and girth combined,

but not more than 108 inches, and weighing less than 20 pounds are subject to a price equal to that for a 20-pound parcel for the zone to which the parcel is addressed.

~~c.~~d. Oversized Pieces

Regardless of weight, any piece that measures more than 108 inches (but not more than 130 inches) in length plus girth must pay the oversized price.

2125 First-Class Package Service

* * * * *

2125.2 Size and Weight Limitations

COMMERCIAL BASE

[*Mixed ADC/*single-piece, ADC, 3-digit, and 5-digit]

	Length	Height	Thickness	Weight
Minimum	3.5 inches	3.0 inches	0.05 inch	None.
Maximum	18 inches	15 inches	22 inches	13 ounces.

COMMERCIAL PLUS

[*Mixed ADC/*single-piece, ADC, 3-digit, and 5-digit]

	Length	Height	Thickness	Weight
Minimum	6 inches	3.0 inches	0.25 inch	3.5 ounces.
Maximum	18 inches	15 inches	22 inches	<16 ounces.

2125.3 Minimum Volume Requirements

First-class package service	Minimum volume requirements
Commercial Base:	
*Mixed ADC/*Single-Piece	None.
ADC	500 pieces per mailing.
3-Digit	500 pieces per mailing.
5-Digit	500 pieces per mailing.
Commercial Plus	5000 pieces per year commitment.
*Mixed ADC/*Single-Piece	200 pieces or 50 pounds per mailing.
ADC	500 pieces per mailing.
3-Digit	500 pieces per mailing.
5-Digit	500 pieces per mailing.

2125.4 Price Categories

The following price categories are available for the product specified in this section:

- Commercial Plus
  - 5-Digit
  - 3-Digit
  - ADC
  - Mixed ADC/Single-Piece

- Commercial Base
  - 5-Digit
  - 3-Digit
  - ADC
  - Mixed ADC/Single-Piece

* * *

2125.6 Prices

Commercial Plus

Weight (ounces)	5-Digit ($)	3-Digit * ($)	ADC * ($)	*Mixed ADC/* Single-Piece ($)
≥ 3.5 and < 16	3.29	3.49	3.69	3.97

* For parcels claiming 3-Digit or ADC prices, a $0.05 surcharge applies if the parcels are not barcoded.

Commercial Base

Maximum weight (ounces)	5-Digit ($)	3-Digit * ($)	ADC * ($)	*Mixed ADC/* Single-Piece ($)
1	1.20	1.33	1.42	1.64
2	1.20	1.33	1.42	1.64
3	1.20	1.33	1.42	1.64
4	1.37	1.50	1.59	1.81
5	1.54	1.67	1.76	1.98
6	1.71	1.84	1.93	2.15
7	1.87	2.00	2.09	2.31
8	2.04	2.17	2.26	2.48
9	2.21	2.34	2.43	2.65
10	2.38	2.51	2.60	2.82
11	2.55	2.68	2.77	2.99
12	2.70	2.83	2.92	3.14
13	2.84	2.97	3.06	3.28

* For parcels claiming 3-Digit or ADC prices, a $0.05 surcharge applies if the parcels are not barcoded or are nonmachinable.

2300 International Products

2305 Outbound International Expedited Services

2305.2 Size and Weight Limitations

* * * * *

Global Express Guaranteed[1]

	Length	Height	Thickness	Weight
Minimum	Must be able to hold the shipping label with pouch and postage			none
Maximum	46 inches	35 inches	46 inches	70 pounds
	108 inches in combined length and girth			

Express Mail International[1]

	Length	Height	Thickness	Weight
Minimum	Large enough to accommodate postage, address, and other required elements on the address side			none
Maximum	79 ~~36~~ inches			~~none~~ 70 pounds
	108~~79~~ inches in combined length and girth			
Flat Rate Envelopes	Nominal Sizes: Regular: 9.5 x 12.5 inches Legal: 9.5 x 15 inches			20 pounds
Flat Rate Boxes	Sizes: Various sizes as defined in the IMM. – not to exceed .35 cu. ft.			20 pounds

Notes

1. Country-specific restrictions may apply as specified in the International Mail Manual.

* * *

2305.4 Price Categories

The following price categories are available for the product specified in this section:

Global Express Guaranteed

- Retail
  - Price Groups 1-8

- ~~Price Groups 1-8~~

- ~~Online Incentives – For selected destination countries, available for customers who prepare and pay for Global Express Guaranteed shipments online at usps.com or by using an authorized PC Postage vendor. The discount applies only to the postage portion of Global Express Guaranteed prices.~~

- ~~Permit Imprint Incentives – Available for customers who pay for postage by permit imprint and use approved software for mail preparation. The discount applies only to the postage portion of the Global Express Guaranteed prices.~~

- *Commercial Base—For selected destination countries, available for customers who prepare and pay for Global Express Guaranteed shipments via permit imprint when used in conjunction with Postal Service-supplied software, online at USPS.com, or by using an authorized PC Postage vendor. The discount applies only to the postage portion of Global Express Guaranteed prices.*

- *Commercial Plus—For selected destination countries, available for customers who use specifically authorized postage payment methods and must tender at least $100,000 per year of any combination of Global Express Guaranteed, Express Mail International, or Priority Mail International items. The discount applies only to the postage portion of Global Express Guaranteed prices.*

Express Mail International

- Flat Rate Envelope—*Envelope provided or approved by the Postal Service*
  - Canada
  - All Other Countries
- *Flat Rate Box—Boxes provided or approved by the Postal Service*
  - *Canada*
  - *All Other Countries*
- Retail
  - Price Groups 1–17

- ~~Online Incentives – For selected destination countries, available for customers who prepare and pay for Express Mail International shipments online at usps.com or by using an authorized PC Postage vendor. The discount applies only to the postage portion of Express Mail International prices.~~

~~Permit Imprint Incentives – Available for customers who pay for postage by permit imprint and use approved software for mail preparation and Customs-related functions. The discount applies only to the postage portion of the Express Mail International prices.~~

- *Commercial Base—For selected destination countries, available for customers who prepare and pay for Express Mail International shipments via permit imprint when used in conjunction with Postal Service-supplied software that electronically transmits Customs-related functions, online at USPS.com, or by using an authorized PC Postage vendor. The discount applies only to the postage portion of Express Mail International prices.*
- *Commercial Plus—For selected destination countries, available for customers who use specifically authorized postage payment methods and must tender at least $100,000 per year of any combination of Express Mail International, Global Express Guaranteed, or Priority Mail International items. The discount applies only to the postage portion of Express Mail International prices.*

* * *

2305.6 Prices

Global Express Guaranteed

The price for Global Express Guaranteed service is based on the actual weight or the dimensional weight of the item, whichever is greater, except for Postal Service produced Global Express Guaranteed envelopes ~~where~~, in which case, the postage is based on the actual weight. See the International Mail Manual for the calculation of dimensional weight.

GLOBAL EXPRESS GUARANTEED *Retail Prices*

Weight not over (lb.)	Price groups							
	1	2	3	4	5	6	7	8
0.5	$44.00	$45.00	$52.00	$100.00	$58.00	$58.00	$55.00	$69.75
1	63.35	64.95	72.45	114.50	78.75	75.25	65.35	86.50
2	67.80	71.00	79.90	128.75	87.00	83.10	73.70	101.25
3	72.25	77.05	87.35	143.00	95.25	90.95	82.05	116.00
4	76.70	83.10	94.80	157.25	103.50	98.80	90.40	130.75
5	80.65	89.15	102.25	171.50	111.75	106.65	98.75	145.50
6	84.60	94.10	107.30	184.25	117.50	113.50	104.20	158.25
7	88.55	99.05	112.35	197.00	123.25	120.35	109.65	171.00
8	92.50	104.00	117.40	209.75	129.00	127.20	115.10	183.75
9	96.45	108.95	122.45	222.50	134.75	134.05	120.55	196.50
10	100.40	113.90	127.50	235.25	140.50	140.90	126.00	209.25
11	104.35	117.05	131.45	248.00	145.25	146.75	130.35	218.00
12	108.30	120.20	135.40	260.75	150.00	152.60	134.70	226.75
13	112.25	123.35	139.35	273.50	154.75	158.45	139.05	235.50
14	116.20	126.50	143.30	286.25	159.50	164.30	143.40	244.25
15	120.15	129.65	147.25	299.00	164.25	170.15	147.75	253.00
16	124.10	132.80	151.20	311.75	169.00	176.00	152.10	261.75
17	128.05	135.95	155.15	324.50	173.75	181.85	156.45	270.50
18	132.00	139.10	159.10	337.25	178.50	187.70	160.80	279.25
19	135.95	142.25	163.05	350.00	183.25	193.55	165.15	288.00
20	139.90	145.40	167.00	362.75	188.00	199.40	169.50	296.75
21	143.85	147.55	170.95	373.00	192.75	205.25	173.85	305.50
22	147.80	149.70	174.90	383.25	197.50	211.10	178.20	314.25
23	151.75	151.85	178.85	393.50	202.25	216.95	182.55	323.00
24	155.70	154.00	182.80	403.75	207.00	222.80	186.90	331.75
25	159.65	156.15	186.75	414.00	211.75	228.65	191.25	340.50
26	163.60	158.30	190.70	424.25	216.50	234.50	195.60	349.25
27	167.55	160.45	194.65	434.50	221.25	240.35	199.95	358.00
28	171.50	162.60	198.60	444.75	226.00	246.20	204.30	366.75
29	175.45	164.75	202.55	455.00	230.75	252.05	208.65	375.50
30	179.40	166.90	206.50	465.25	235.50	257.90	213.00	384.25
31	183.35	169.05	210.45	475.50	240.25	263.75	217.35	393.00
32	187.30	171.20	214.40	485.75	245.00	269.60	221.70	401.75
33	191.25	173.35	218.35	496.00	249.75	275.45	226.05	410.50
34	195.20	175.50	222.30	506.25	254.50	281.30	230.40	419.25
35	199.15	177.65	226.25	516.50	259.25	287.15	234.75	428.00
36	203.10	179.80	230.20	526.75	264.00	293.00	239.10	436.75
37	207.05	181.95	234.15	537.00	268.75	298.85	243.45	445.50
38	211.00	184.10	238.10	547.25	273.50	304.70	247.80	454.25
39	214.95	186.25	242.05	557.50	278.25	310.55	252.15	463.00
40	218.90	188.40	246.00	567.75	283.00	316.40	256.50	471.75
41	222.05	190.55	249.95	578.00	287.75	322.25	260.85	480.50
42	225.20	192.70	253.90	588.25	292.50	328.10	265.20	489.25
43	228.35	194.85	257.85	598.50	297.25	333.95	269.55	498.00
44	231.50	197.00	261.80	608.75	302.00	339.80	273.90	506.75
45	234.65	199.15	265.75	619.00	306.75	345.65	278.25	515.50
46	237.80	201.30	269.70	629.25	311.50	351.50	282.60	524.25
47	240.95	203.45	273.65	639.50	316.25	357.35	286.95	533.00
48	244.10	205.60	277.60	649.75	321.00	363.20	291.30	541.75
49	247.25	207.75	281.55	660.00	325.75	369.05	295.65	550.50
50	250.40	209.90	285.50	670.25	330.50	374.90	300.00	559.25
51	253.55	212.05	289.45	680.50	335.25	380.75	304.35	568.00
52	256.70	214.20	293.40	690.75	340.00	386.60	308.70	576.75
53	259.85	216.35	297.35	701.00	344.75	392.45	313.05	585.50
54	263.00	218.50	301.30	711.25	349.50	398.30	317.40	594.25
55	266.15	220.65	305.25	721.50	354.25	404.15	321.75	603.00
56	269.30	222.80	309.20	731.75	359.00	410.00	326.10	611.75
57	272.45	224.95	313.15	742.00	363.75	415.85	330.45	620.50
58	275.60	227.10	317.10	752.25	368.50	421.70	334.80	629.25

GLOBAL EXPRESS GUARANTEED *Retail Prices*—Continued

Weight not over (lb.)	Price groups							
	1	2	3	4	5	6	7	8
59	278.75	229.25	321.05	762.50	373.25	427.55	339.15	638.00
60	281.90	231.40	325.00	772.75	378.00	433.40	343.50	646.75
61	285.05	233.55	328.95	783.00	382.75	439.25	347.85	655.50
62	288.20	235.70	332.90	793.25	387.50	445.10	352.20	664.25
63	291.35	237.85	336.85	803.50	392.25	450.95	356.55	673.00
64	294.50	240.00	340.80	813.75	397.00	456.80	360.90	681.75
65	297.65	242.15	344.75	824.00	401.75	462.65	365.25	690.50
66	300.80	244.30	348.70	834.25	406.50	468.50	369.60	699.25
67	303.95	246.45	352.65	844.50	411.25	474.35	373.95	708.00
68	307.10	248.60	356.60	854.75	416.00	480.20	378.30	716.75
69	310.25	250.75	360.55	865.00	420.75	486.05	382.65	725.50
70	313.40	252.90	364.50	875.25	425.50	491.90	387.00	734.25

GLOBAL EXPRESS GUARANTEED COMMERCIAL BASE PRICES

Maximum weight (pounds)	*Country price group*							
	1 ($)	*2 ($)*	*3 ($)*	*4 ($)*	*5 ($)*	*6 ($)*	*7 ($)*	*8 ($)*
0.5	44.00	45.00	52.00	90.00	56.68	57.17	54.56	64.23
1	59.52	60.66	65.21	103.05	71.18	68.69	65.35	77.85
2	63.05	64.60	71.91	115.88	78.84	74.79	71.28	91.13
3	67.57	70.56	78.62	128.70	85.73	81.86	76.82	104.40
4	70.81	74.79	85.32	141.53	93.15	88.92	82.70	117.68
5	72.63	80.24	92.03	154.35	100.58	95.99	89.28	130.95
6	76.14	84.69	96.57	165.83	105.75	102.15	94.29	142.43
7	79.70	89.15	101.12	177.30	110.93	108.32	98.82	153.90
8	83.25	93.60	105.66	188.78	116.10	114.48	103.59	165.38
9	86.81	98.06	110.21	200.25	121.28	120.65	108.50	176.85
10	90.36	102.51	114.75	211.73	126.45	126.81	113.40	188.33
11	93.92	105.35	118.31	223.20	130.73	132.08	117.32	196.20
12	97.47	108.18	121.86	234.68	135.00	137.34	121.23	204.08
13	101.03	111.02	125.42	246.15	139.28	142.61	125.15	211.95
14	104.58	113.85	128.97	257.63	143.55	147.87	129.06	219.83
15	108.14	116.69	132.53	269.10	147.83	153.14	132.98	227.70
16	111.69	119.52	136.08	280.58	152.10	158.40	136.89	235.58
17	115.25	122.36	139.64	292.05	156.38	163.67	140.81	243.45
18	118.80	125.19	143.19	303.53	160.65	168.93	144.72	251.33
19	122.36	128.03	146.75	315.00	164.93	174.20	148.64	259.20
20	125.91	130.86	150.30	326.48	169.20	179.46	152.81	267.08
21	129.47	132.80	153.86	335.70	173.48	184.73	156.47	274.95
22	133.02	134.73	157.41	344.93	177.75	189.99	160.38	282.83
23	136.58	136.67	160.97	354.15	182.03	195.26	164.30	290.70
24	140.13	138.60	164.52	363.38	186.30	200.52	168.21	298.58
25	143.69	140.54	168.08	372.60	190.58	205.79	172.13	306.45
26	147.24	142.47	171.63	381.83	194.85	211.05	176.04	314.33
27	150.80	144.41	175.19	391.05	199.13	216.32	179.96	322.20
28	154.35	146.34	178.74	400.28	203.40	221.58	183.87	330.08
29	157.91	148.28	182.30	409.50	207.68	226.85	187.79	337.95
30	161.46	150.21	185.85	418.73	211.95	232.11	191.70	345.83
31	165.02	152.15	189.41	427.95	216.23	237.38	195.62	353.70
32	168.57	154.08	192.96	437.18	220.50	242.64	199.53	361.58
33	172.13	156.02	196.52	446.40	224.78	247.91	203.45	369.45
34	175.68	157.95	200.07	455.63	229.05	253.17	207.36	377.33
35	179.24	159.89	203.63	464.85	233.33	258.44	211.28	385.20
36	182.79	161.82	207.18	474.08	237.60	263.70	215.19	393.08
37	186.35	163.76	210.74	483.30	241.88	268.97	219.11	400.95
38	189.90	165.69	214.29	492.53	246.15	274.23	223.02	408.83
39	193.46	167.63	217.85	501.75	250.43	279.50	226.94	416.70
40	197.01	169.56	221.40	510.98	254.70	284.76	230.85	424.58
41	199.85	171.50	224.96	520.20	258.98	290.03	234.77	432.45
42	202.68	173.43	228.51	529.43	263.25	295.29	238.68	440.33
43	205.52	175.37	232.07	538.65	267.53	300.56	242.60	448.20
44	208.35	177.30	235.62	547.88	271.80	305.82	246.51	456.08
45	211.19	179.24	239.18	557.10	276.08	311.09	250.43	463.95
46	214.02	181.17	242.73	566.33	280.35	316.35	254.34	471.83
47	216.86	183.11	246.29	575.55	284.63	321.62	258.26	479.70
48	219.69	185.04	249.84	584.78	288.90	326.88	262.17	487.58
49	222.53	186.98	253.40	594.00	293.18	332.15	266.09	495.45

GLOBAL EXPRESS GUARANTEED COMMERCIAL BASE PRICES—Continued

Maximum weight (pounds)	Country price group							
	1 ($)	2 ($)	3 ($)	4 ($)	5 ($)	6 ($)	7 ($)	8 ($)
50	225.36	188.91	256.95	603.23	297.45	337.41	270.00	503.33
51	228.20	190.85	260.51	612.45	301.73	342.68	273.92	511.20
52	231.03	192.78	264.06	621.68	306.00	347.94	277.83	519.08
53	233.87	194.72	267.62	630.90	310.28	353.21	281.75	526.95
54	236.70	196.65	271.17	640.13	314.55	358.47	285.66	534.83
55	239.54	198.59	274.73	649.35	318.83	363.74	289.58	542.70
56	242.37	200.52	278.28	658.58	323.10	369.00	293.49	550.58
57	245.21	202.46	281.84	667.80	327.38	374.27	297.41	558.45
58	248.04	204.39	285.39	677.03	331.65	379.53	301.32	566.33
59	250.88	206.33	288.94	686.25	335.93	384.80	305.24	574.20
60	253.71	208.26	292.50	695.48	340.20	390.06	309.15	582.08
61	256.55	210.20	296.05	704.70	344.48	395.33	313.07	589.95
62	259.38	212.13	299.61	713.93	348.75	400.59	316.98	597.83
63	262.22	214.07	303.16	723.15	353.03	405.86	320.90	605.70
64	265.05	216.00	306.72	732.38	357.30	411.12	324.81	613.58
65	267.89	217.94	310.27	741.60	361.58	416.39	328.73	621.45
66	270.72	219.87	313.83	750.83	365.85	421.65	332.64	629.33
67	273.56	221.81	317.38	760.05	370.13	426.92	336.56	637.20
68	276.39	223.74	320.94	769.28	374.40	432.18	340.47	645.08
69	279.23	225.68	324.49	778.50	378.68	437.45	344.39	652.95
70	282.06	227.61	328.05	787.73	382.95	442.71	348.30	660.83

GLOBAL EXPRESS GUARANTEED COMMERCIAL PLUS PRICES

Maximum weight (pounds)	Country price group							
	1 ($)	2 ($)	3 ($)	4 ($)	5 ($)	6 ($)	7 ($)	8 ($)
0.5	41.38	42.46	46.46	83.00	49.30	49.76	47.29	57.89
1	52.58	53.91	60.13	95.04	65.36	62.46	58.00	71.80
2	56.27	58.93	66.32	106.86	72.21	68.97	63.08	84.04
3	59.97	63.95	72.50	118.69	79.06	75.49	68.31	96.28
4	63.66	68.97	78.68	130.52	85.91	82.00	75.03	108.52
5	66.94	73.99	84.87	142.35	92.75	88.52	81.96	120.77
6	70.22	78.10	89.06	152.93	97.53	94.21	86.49	131.35
7	73.50	82.21	93.25	163.51	102.30	99.89	91.01	141.93
8	76.78	86.32	97.44	174.09	107.07	105.58	95.53	152.51
9	80.05	90.43	101.63	184.68	111.84	111.26	100.06	163.10
10	83.33	94.54	105.83	195.26	116.62	116.95	104.58	173.68
11	86.61	97.15	109.10	205.84	120.56	121.80	108.19	180.94
12	89.89	99.77	112.38	216.42	124.50	126.66	111.80	188.20
13	93.17	102.38	115.66	227.01	128.44	131.51	115.41	195.47
14	96.45	105.00	118.94	237.59	132.39	136.37	119.02	202.73
15	99.72	107.61	122.22	248.17	136.33	141.22	122.63	209.99
16	103.00	110.22	125.50	258.75	140.27	146.08	126.24	217.25
17	106.28	112.84	128.77	269.34	144.21	150.94	129.85	224.52
18	109.56	115.45	132.05	279.92	148.16	155.79	133.46	231.78
19	112.84	118.07	135.33	290.50	152.10	160.65	137.07	239.04
20	116.12	120.68	138.61	301.08	156.04	165.50	140.69	246.30
21	119.40	122.47	141.89	309.59	159.98	170.36	144.30	253.57
22	122.67	124.25	145.17	318.10	163.93	175.21	147.91	260.83
23	125.95	126.04	148.45	326.61	167.87	180.07	151.52	268.09
24	129.23	127.82	151.72	335.11	171.81	184.92	155.13	275.35
25	132.51	129.60	155.00	343.62	175.75	189.78	158.74	282.62
26	135.79	131.39	158.28	352.13	179.70	194.64	162.35	289.88
27	139.07	133.17	161.56	360.64	183.64	199.49	165.96	297.14
28	142.35	134.96	164.84	369.14	187.58	204.35	169.57	304.40
29	145.62	136.74	168.12	377.65	191.52	209.20	173.18	311.67
30	148.90	138.53	171.40	386.16	195.47	214.06	176.79	318.93
31	152.18	140.31	174.67	394.67	199.41	218.91	180.40	326.19
32	155.46	142.10	177.95	403.17	203.35	223.77	184.01	333.45
33	158.74	143.88	181.23	411.68	207.29	228.62	187.62	340.72
34	162.02	145.67	184.51	420.19	211.24	233.48	191.23	347.98
35	165.29	147.45	187.79	428.70	215.18	238.33	194.84	355.24
36	168.57	149.23	191.07	437.20	219.12	243.19	198.45	362.50
37	171.85	151.02	194.34	445.71	223.06	248.05	202.06	369.77
38	175.13	152.80	197.62	454.22	227.01	252.90	205.67	377.03
39	178.41	154.59	200.90	462.73	230.95	257.76	209.28	384.29

GLOBAL EXPRESS GUARANTEED COMMERCIAL PLUS PRICES—Continued

Maximum weight (pounds)	*Country price group*							
	1 ($)	*2 ($)*	*3 ($)*	*4 ($)*	*5 ($)*	*6 ($)*	*7 ($)*	*8 ($)*
40	*181.69*	*156.37*	*204.18*	*471.23*	*234.89*	*262.61*	*212.90*	*391.55*
41	*184.30*	*158.16*	*207.46*	*479.74*	*238.83*	*267.47*	*216.51*	*398.82*
42	*186.92*	*159.94*	*210.74*	*488.25*	*242.78*	*272.32*	*220.12*	*406.08*
43	*189.53*	*161.73*	*214.02*	*496.76*	*246.72*	*277.18*	*223.73*	*413.34*
44	*192.15*	*163.51*	*217.29*	*505.26*	*250.66*	*282.03*	*227.34*	*420.60*
45	*194.76*	*165.29*	*220.57*	*513.77*	*254.60*	*286.89*	*230.95*	*427.87*
46	*197.37*	*167.08*	*223.85*	*522.28*	*258.55*	*291.75*	*234.56*	*435.13*
47	*199.99*	*168.86*	*227.13*	*530.79*	*262.49*	*296.60*	*238.17*	*442.39*
48	*202.60*	*170.65*	*230.41*	*539.29*	*266.43*	*301.46*	*241.78*	*449.65*
49	*205.22*	*172.43*	*233.69*	*547.80*	*270.37*	*306.31*	*245.39*	*456.92*
50	*207.83*	*174.22*	*236.97*	*556.31*	*274.32*	*311.17*	*249.00*	*464.18*
51	*210.45*	*176.00*	*240.24*	*564.82*	*278.26*	*316.02*	*252.61*	*471.44*
52	*213.06*	*177.79*	*243.52*	*573.32*	*282.20*	*320.88*	*256.22*	*478.70*
53	*215.68*	*179.57*	*246.80*	*581.83*	*286.14*	*325.73*	*259.83*	*485.97*
54	*218.29*	*181.36*	*250.08*	*590.34*	*290.09*	*330.59*	*263.44*	*493.23*
55	*220.90*	*183.14*	*253.36*	*598.85*	*294.03*	*335.44*	*267.05*	*500.49*
56	*223.52*	*184.92*	*256.64*	*607.35*	*297.97*	*340.30*	*270.66*	*507.75*
57	*226.13*	*186.71*	*259.91*	*615.86*	*301.91*	*345.16*	*274.27*	*515.02*
58	*228.75*	*188.49*	*263.19*	*624.37*	*305.86*	*350.01*	*277.88*	*522.28*
59	*231.36*	*190.28*	*266.47*	*632.88*	*309.80*	*354.87*	*281.49*	*529.54*
60	*233.98*	*192.06*	*269.75*	*641.38*	*313.74*	*359.72*	*285.11*	*536.80*
61	*236.59*	*193.85*	*273.03*	*649.89*	*317.68*	*364.58*	*288.72*	*544.07*
62	*239.21*	*195.63*	*276.31*	*658.40*	*321.63*	*369.43*	*292.33*	*551.33*
63	*241.82*	*197.42*	*279.59*	*666.91*	*325.57*	*374.29*	*295.94*	*558.59*
64	*244.44*	*199.20*	*282.86*	*675.41*	*329.51*	*379.14*	*299.55*	*565.85*
65	*247.05*	*200.98*	*286.14*	*683.92*	*333.45*	*384.00*	*303.16*	*573.12*
66	*249.66*	*202.77*	*289.42*	*692.43*	*337.40*	*388.86*	*306.77*	*580.38*
67	*252.28*	*204.55*	*292.70*	*700.94*	*341.34*	*393.71*	*310.38*	*587.64*
68	*254.89*	*206.34*	*295.98*	*709.44*	*345.28*	*398.57*	*313.99*	*594.90*
69	*257.51*	*208.12*	*299.26*	*717.95*	*349.22*	*403.42*	*317.60*	*602.17*
70	*260.12*	*209.91*	*302.53*	*726.46*	*353.17*	*408.28*	*321.21*	*609.43*

Express Mail International: Retail Flat Rate Prices[1] ~~Envelope~~

	Country Price Group	
	Canada (Price Group 1) ($)	**All Other Countries (Price Groups 2 through 17) ($)**
Flat Rate Envelope	29.25	38.00
Flat Rate Boxes	59.95	74.95

Note

1. No additional discount is offered for Commercial Base or Commercial Plus.

BILLING CODE 7710–12–P

Express Mail International Retail Prices

Weight Not Over (lb.)	Price Groups																
	1	2	3	4	5	6	7	8	9	10	11	12	13	14	15	16	17
0.5	$29.25	$38.00	$38.00	$38.00	$38.00	$38.00	$38.00	$38.00	$38.00	$38.00	$38.00	$38.00	$38.00	$38.00	$38.00	$38.00	$38.00
1	$32.90	$39.75	$42.45	$43.15	$39.50	$42.95	$45.95	$44.75	$43.75	$41.50	$43.65	$43.85	$41.85	$39.35	$40.95	$40.25	$40.55
2	$36.85	$43.30	$47.70	$48.50	$44.45	$47.80	$51.10	$49.50	$47.90	$46.75	$48.40	$49.80	$46.40	$44.70	$45.50	$44.90	$45.00
3	$40.80	$46.85	$52.95	$53.85	$49.40	$52.65	$56.25	$54.25	$52.05	$52.00	$53.15	$55.75	$50.95	$50.05	$50.05	$49.55	$49.45
4	$44.75	$50.40	$58.20	$59.20	$54.35	$57.50	$61.40	$59.00	$56.20	$57.25	$57.90	$61.70	$55.50	$55.40	$54.60	$54.20	$53.90
5	$48.70	$53.95	$63.45	$64.55	$59.30	$62.35	$66.55	$63.75	$60.35	$62.50	$62.65	$67.65	$60.05	$60.75	$59.15	$58.85	$58.35
6	$53.25	$56.60	$67.30	$69.00	$62.95	$66.80	$72.10	$67.80	$64.40	$68.15	$65.60	$71.80	$63.10	$65.80	$63.50	$62.20	$61.50
7	$57.80	$59.25	$71.15	$73.45	$66.60	$71.25	$77.65	$71.85	$68.45	$73.80	$68.55	$75.95	$66.15	$70.85	$67.85	$65.55	$64.65
8	$62.35	$61.90	$75.00	$77.90	$70.25	$75.70	$83.20	$75.90	$72.50	$79.45	$71.50	$80.10	$69.20	$75.90	$72.20	$68.90	$67.80
9	$66.90	$64.55	$78.85	$82.35	$73.90	$80.15	$88.75	$79.95	$76.55	$85.10	$74.45	$84.25	$72.25	$80.95	$76.55	$72.25	$70.95
10	$71.45	$67.20	$82.70	$86.80	$77.55	$84.60	$94.30	$84.00	$80.60	$90.75	$77.40	$88.40	$75.30	$86.00	$80.90	$75.60	$74.10
11	$76.00	$69.65	$85.75	$91.15	$81.00	$88.95	$99.85	$88.35	$84.55	$96.50	$80.35	$92.45	$78.35	$91.55	$85.25	$78.75	$77.25
12	$80.55	$72.10	$88.80	$95.50	$84.45	$93.30	$105.40	$92.70	$88.50	$102.25	$83.30	$96.50	$81.40	$97.10	$89.60	$81.90	$80.40
13	$85.10	$74.55	$91.85	$99.85	$87.90	$97.65	$110.95	$97.05	$92.45	$108.00	$86.25	$100.55	$84.45	$102.65	$93.95	$85.05	$83.55
14	$89.65	$77.00	$94.90	$104.20	$91.35	$102.00	$116.50	$101.40	$96.40	$113.75	$89.20	$104.60	$87.50	$108.20	$98.30	$88.20	$86.70
15	$94.20	$79.45	$97.95	$108.55	$94.80	$106.35	$122.05	$105.75	$100.35	$119.50	$92.15	$108.65	$90.55	$113.75	$102.65	$91.35	$89.85
16	$98.75	$81.90	$101.00	$112.90	$98.25	$110.70	$127.60	$110.10	$104.30	$125.25	$95.10	$112.70	$93.60	$119.30	$107.00	$94.50	$93.00
17	$103.30	$84.35	$104.05	$117.25	$101.70	$115.05	$133.15	$114.45	$108.25	$131.00	$98.05	$116.75	$96.65	$124.85	$111.35	$97.65	$96.15
18	$107.85	$86.80	$107.10	$121.60	$105.15	$119.40	$138.70	$118.80	$112.20	$136.75	$101.00	$120.80	$99.70	$130.40	$115.70	$100.80	$99.30
19	$112.40	$89.25	$110.15	$125.95	$108.60	$123.75	$144.25	$123.15	$116.15	$142.50	$103.95	$124.85	$102.75	$135.95	$120.05	$103.95	$102.45
20	$116.95	$91.70	$113.20	$130.30	$112.05	$128.10	$149.80	$127.50	$120.10	$148.25	$106.90	$128.90	$105.80	$141.50	$124.40	$107.10	$105.60
21	$121.50	$94.15	$116.25	$134.65	$115.50	$132.45	$155.35	$131.85	$124.05	$154.00	$109.85	$132.95	$108.85	$147.05	$128.75	$110.25	$108.75
22	$126.05	$96.60	$119.30	$139.00	$118.95	$136.80	$160.90	$136.20	$128.00	$159.75	$112.80	$137.00	$111.90	$152.60	$133.10	$113.40	$111.90
23	$130.60	$99.05	$122.35	$143.35	$122.40	$141.15	$166.45	$140.55	$131.95	$165.50	$115.75	$141.05	$114.95	$158.15	$137.45	$116.55	$115.05
24	$135.15	$101.50	$125.40	$147.70	$125.85	$145.50	$172.00	$144.90	$135.90	$171.25	$118.70	$145.10	$118.00	$163.70	$141.80	$119.70	$118.20
25	$139.70	$103.95	$128.45	$152.05	$129.30	$149.85	$177.55	$149.25	$139.85	$177.00	$121.65	$149.15	$121.05	$169.25	$146.15	$122.85	$121.35
26	$144.25	$106.40	$131.50	$156.40	$132.75	$154.20	$183.10	$153.60	$143.80	$182.75	$124.60	$153.20	$124.10	$174.80	$150.50	$126.00	$124.50
27	$148.80	$108.85	$134.55	$160.75	$136.20	$158.55	$188.65	$157.95	$147.75	$188.50	$127.55	$157.25	$127.15	$180.35	$154.85	$129.15	$127.65
28	$153.35	$111.30	$137.60	$165.10	$139.65	$162.90	$194.20	$162.30	$151.70	$194.25	$130.50	$161.30	$130.20	$185.90	$159.20	$132.30	$130.80
29	$157.90	$113.75	$140.65	$169.45	$143.10	$167.25	$199.75	$166.65	$155.65	$200.00	$133.45	$165.35	$133.25	$191.45	$163.55	$135.45	$133.95
30	$162.45	$116.20	$143.70	$173.80	$146.55	$171.60	$205.30	$171.00	$159.60	$205.75	$136.40	$169.40	$136.30	$197.00	$167.90	$138.60	$137.10
31	$165.90	$118.65	$146.75	$178.15	$150.00	$175.95	$210.85	$175.35	$163.55	$211.50	$139.35	$173.45	$139.35	$202.55	$172.25	$141.75	$140.25
32	$169.35	$121.10	$149.80	$182.50	$153.45	$180.30	$216.40	$179.70	$167.50	$217.25	$142.30	$177.50	$142.40	$208.10	$176.60	$144.90	$143.40
33	$172.80	$123.55	$152.85	$186.85	$156.90	$184.65	$221.95	$184.05	$171.45	$223.00	$145.25	$181.55	$145.45	$213.65	$180.95	$148.05	$146.55
34	$176.25	$126.00	$155.90	$191.20	$160.35	$189.00	$227.50	$188.40	$175.40	$228.75	$148.20	$185.60	$148.50	$219.20	$185.30	$151.20	$149.70

35	$179.70	$128.45	$158.95	$195.55	$163.80	$193.35	$233.05	$192.75	$179.35	$234.50	$151.15	$189.65	$151.55	$224.75	$189.65	$154.35	$152.85
36	$183.15	$130.90	$162.00	$199.90	$167.25	$197.70	$238.60	$197.10	$183.30	$240.25	$154.10	$193.70	$154.60	$230.30	$194.00	$157.50	$156.00
37	$186.60	$133.35	$165.05	$204.25	$170.70	$202.05	$244.15	$201.45	$187.25	$246.00	$157.05	$197.75	$157.65	$235.85	$198.35	$160.65	$159.15
38	$190.05	$135.80	$168.10	$208.60	$174.15	$206.40	$249.70	$205.80	$191.20	$251.75	$160.00	$201.80	$160.70	$241.40	$202.70	$163.80	$162.30
39	$193.50	$138.25	$171.15	$212.95	$177.60	$210.75	$255.25	$210.15	$195.15	$257.50	$162.95	$205.85	$163.75	$246.95	$207.05	$166.95	$165.45
40	$196.95	$140.70	$174.20	$217.30	$181.05	$215.10	$260.80	$214.50	$199.10	$263.25	$165.90	$209.90	$166.80	$252.50	$211.40	$170.10	$168.60
41	$200.40	$143.15	$177.25	$221.65	$184.50	$219.45	$266.35	$218.85	$203.05	$269.00	$168.85	$213.95	$169.85	$258.05	$215.75	$173.25	$171.75
42	$203.85	$145.60	$180.30	$226.00	$187.95	$223.80	$271.90	$223.20	$207.00	$274.75	$171.80	$218.00	$172.90	$263.60	$220.10	$176.40	$174.90
43	$207.30	$148.05	$183.35	$230.35	$191.40	$228.15	$277.45	$227.55	$210.95	$280.50	$174.75	$222.05	$175.95	$269.15	$224.45	$179.55	$178.05
44	$210.75	$150.50	$186.40	$234.70	$194.85	$232.50	$283.00	$231.90	$214.90	$286.25	$177.70	$226.10	$179.00	$274.70	$228.80	$182.70	$181.20
45	$214.20	-	$189.45	$239.05	$198.30	$236.85	$288.55	$236.25	$218.85	$292.00	$180.65	$230.15	$182.05	$280.25	$233.15	$185.85	$184.35
46	$217.65	-	$192.50	$243.40	$201.75	$241.20	$294.10	$240.60	$222.80	$297.75	$183.60	$234.20	$185.10	$285.80	$237.50	$189.00	$187.50
47	$221.10	-	$195.55	$247.75	$205.20	$245.55	$299.65	$244.95	$226.75	$303.50	$186.55	$238.25	$188.15	$291.35	$241.85	$192.15	$190.65
48	$224.55	-	$198.60	$252.10	$208.65	$249.90	$305.20	$249.30	$230.70	$309.25	$189.50	$242.30	$191.20	$296.90	$246.20	$195.30	$193.80
49	$228.00	-	$201.65	$256.45	$212.10	$254.25	$310.75	$253.65	$234.65	$315.00	$192.45	$246.35	$194.25	$302.45	$250.55	$198.45	$196.95
50	$231.45	-	$204.70	$260.80	$215.55	$258.60	$316.30	$258.00	$238.60	$320.75	$195.40	$250.40	$197.30	$308.00	$254.90	$201.60	$200.10
51	$234.90	-	$207.75	$265.15	$219.00	$262.95	$321.85	$262.35	$242.55	$326.50	$198.35	$254.45	$200.35	$313.55	$259.25	$204.75	$203.25
52	$238.35	-	$210.80	$269.50	$222.45	$267.30	$327.40	$266.70	$246.50	$332.25	$201.30	$258.50	$203.40	$319.10	$263.60	$207.90	$206.40
53	$241.80	-	$213.85	$273.85	$225.90	$271.65	$332.95	$271.05	$250.45	$338.00	$204.25	$262.55	$206.45	$324.65	$267.95	$211.05	$209.55
54	$245.25	-	$216.90	$278.20	$229.35	$276.00	$338.50	$275.40	$254.40	$343.75	$207.20	$266.60	$209.50	$330.20	$272.30	$214.20	$212.70
55	$248.70	-	$219.95	$282.55	$232.80	$280.35	$344.05	$279.75	$258.35	$349.50	$210.15	$270.65	$212.55	$335.75	$276.65	$217.35	$215.85
56	$252.15	-	$223.00	$286.90	$236.25	$284.70	$349.60	$284.10	$262.30	$355.25	$213.10	$274.70	$215.60	$341.30	$281.00	$220.50	$219.00
57	$255.60	-	$226.05	$291.25	$239.70	$289.05	$355.15	$288.45	$266.25	$361.00	$216.05	$278.75	$218.65	$346.85	$285.35	$223.65	$222.15
58	$259.05	-	$229.10	$295.60	$243.15	$293.40	$360.70	$292.80	$270.20	$366.75	$219.00	$282.80	$221.70	$352.40	$289.70	$226.80	$225.30
59	$262.50	-	$232.15	$299.95	$246.60	$297.75	$366.25	$297.15	$274.15	$372.50	$221.95	$286.85	$224.75	$357.95	$294.05	$229.95	$228.45
60	$265.95	-	$235.20	$304.30	$250.05	$302.10	$371.80	$301.50	$278.10	$378.25	$224.90	$290.90	$227.80	$363.50	$298.40	$233.10	$231.60
61	$269.40	-	$238.25	$308.65	$253.50	$306.45	$377.35	$305.85	$282.05	$384.00	$227.85	$294.95	$230.85	$369.05	$302.75	$236.25	$234.75
62	$272.85	-	$241.30	$313.00	$256.95	$310.80	$382.90	$310.20	$286.00	$389.75	$230.80	$299.00	$233.90	$374.60	$307.10	$239.40	$237.90
63	$276.30	-	$244.35	$317.35	$260.40	$315.15	$388.45	$314.55	$289.95	$395.50	$233.75	$303.05	$236.95	$380.15	$311.45	$242.55	$241.05
64	$279.75	-	$247.40	$321.70	$263.85	$319.50	$394.00	$318.90	$293.90	$401.25	$236.70	$307.10	$240.00	$385.70	$315.80	$245.70	$244.20
65	$283.20	-	$250.45	$326.05	$267.30	$323.85	$399.55	$323.25	$297.85	$407.00	$239.65	$311.15	$243.05	$391.25	$320.15	$248.85	$247.35
66	$286.65	-	$253.50	$330.40	$270.75	$328.20	$405.10	$327.60	$301.80	$412.75	$242.60	$315.20	$246.10	$396.80	$324.50	$252.00	$250.50
67	-	-	$256.55	$334.75	$274.20	$332.55	$410.65	$331.95	$305.75	-	-	-	-	-	-	-	-
68	-	-	$259.60	$339.10	$277.65	$336.90	$416.20	$336.30	$309.70	-	-	-	-	-	-	-	-
69	-	-	$262.65	$343.45	$281.10	$341.25	$421.75	$340.65	$313.65	-	-	-	-	-	-	-	-
70	-	-	$265.70	$347.80	$284.55	$345.60	$427.30	$345.00	$317.60	-	-	-	-	-	-	-	-

Express Mail International Commercial Base Prices

Weight Not Over (lb)	Group 1	Group 2	Group 3	Group 4	Group 5	Group 6	Group 7	Group 8	Group 9	Group 10	Group 11	Group 12	Group 13	Group 14	Group 15	Group 16	Group 17
0.5	$26.91	$35.63	$35.76	$38.00	$34.96	$34.97	$38.00	$34.96	$34.96	$34.96	$38.00	$38.00	$35.32	$34.96	$34.96	$34.96	$34.96
1	$30.27	$36.88	$39.05	$40.33	$36.34	$39.51	$42.27	$41.17	$40.25	$38.18	$40.41	$41.08	$38.50	$36.20	$37.67	$37.03	$37.31
2	$33.90	$39.84	$43.88	$44.62	$40.89	$43.98	$47.01	$45.54	$44.07	$43.01	$44.53	$45.82	$42.69	$41.12	$41.86	$41.31	$41.40
3	$37.54	$43.10	$48.71	$49.54	$45.45	$48.44	$51.75	$49.91	$47.89	$47.84	$48.90	$51.29	$46.87	$46.05	$46.05	$45.59	$45.49
4	$41.17	$46.37	$53.54	$54.46	$50.00	$52.90	$56.49	$54.28	$51.70	$52.83	$53.27	$56.76	$51.06	$50.97	$50.23	$49.86	$49.59
5	$44.80	$49.63	$58.37	$59.39	$54.56	$57.36	$61.23	$58.65	$55.52	$58.46	$57.64	$62.24	$55.25	$55.89	$54.42	$54.14	$53.68
6	$48.99	$52.07	$61.92	$63.48	$57.91	$61.46	$66.33	$62.38	$59.25	$64.09	$60.35	$66.06	$58.05	$60.54	$58.42	$57.22	$56.58
7	$53.18	$54.51	$65.46	$67.57	$61.27	$65.55	$71.44	$66.10	$62.97	$69.71	$63.07	$69.87	$60.86	$65.18	$62.42	$60.31	$59.48
8	$57.36	$56.95	$69.00	$71.67	$64.63	$69.64	$76.54	$69.83	$66.70	$75.34	$65.78	$73.69	$63.66	$69.83	$66.42	$63.39	$62.38
9	$61.55	$59.39	$72.54	$75.76	$67.99	$73.74	$81.65	$73.55	$70.43	$80.97	$68.49	$77.51	$66.47	$74.47	$70.43	$66.47	$65.27
10	$65.84	$61.82	$76.08	$79.86	$71.35	$77.83	$86.76	$77.28	$74.15	$86.59	$71.21	$81.33	$69.28	$79.12	$74.43	$69.55	$68.17
11	$70.21	$64.08	$78.89	$83.86	$74.52	$81.83	$91.86	$81.28	$77.79	$92.22	$73.92	$85.05	$72.08	$84.23	$78.43	$72.45	$71.07
12	$74.57	$66.33	$81.70	$87.86	$77.69	$85.84	$96.97	$85.28	$81.42	$97.85	$76.64	$88.78	$74.89	$89.33	$82.43	$75.35	$73.97
13	$78.93	$68.59	$84.50	$91.86	$80.87	$89.84	$102.07	$89.29	$85.05	$103.48	$79.35	$92.51	$77.69	$94.44	$86.43	$78.25	$76.87
14	$83.30	$70.84	$87.31	$95.86	$84.04	$93.84	$107.18	$93.29	$88.69	$109.10	$82.06	$96.23	$80.50	$99.54	$90.44	$81.14	$79.76
15	$87.66	$73.09	$90.11	$99.87	$87.22	$97.84	$112.29	$97.29	$92.32	$114.73	$84.78	$99.96	$83.31	$104.65	$94.44	$84.04	$82.66
16	$92.02	$75.35	$92.92	$103.87	$90.39	$101.84	$117.39	$101.29	$95.96	$120.36	$87.49	$103.68	$86.11	$109.76	$98.44	$86.94	$85.56
17	$96.39	$77.60	$95.73	$107.87	$93.56	$105.85	$122.50	$105.29	$99.59	$125.98	$90.21	$107.41	$88.92	$114.86	$102.44	$89.84	$88.46
18	$100.75	$79.86	$98.53	$111.87	$96.74	$109.85	$127.60	$109.30	$103.22	$131.61	$92.92	$111.14	$91.72	$119.97	$106.44	$92.74	$91.36
19	$105.11	$82.11	$101.34	$115.87	$99.91	$113.85	$132.71	$113.30	$106.86	$137.24	$95.63	$114.86	$94.53	$125.07	$110.45	$95.63	$94.25
20	$109.48	$84.36	$104.14	$119.88	$103.09	$117.85	$137.82	$117.30	$110.49	$142.86	$98.35	$118.59	$97.34	$130.18	$114.45	$98.53	$97.15
21	$113.84	$86.80	$106.95	$123.88	$106.26	$121.85	$142.92	$121.30	$114.13	$148.49	$101.06	$122.31	$100.14	$135.29	$118.45	$101.43	$100.05
22	$118.20	$89.29	$109.76	$127.88	$109.43	$125.86	$148.03	$125.30	$117.76	$154.12	$103.78	$126.04	$102.95	$140.39	$122.45	$104.33	$102.95
23	$122.57	$91.79	$112.56	$131.88	$112.61	$129.86	$153.13	$129.31	$121.39	$159.74	$106.49	$129.77	$105.75	$145.62	$126.45	$107.23	$105.85
24	$126.93	$94.28	$115.37	$135.88	$115.78	$133.86	$158.24	$133.31	$125.03	$165.37	$109.20	$133.49	$108.56	$150.88	$130.46	$110.12	$108.74
25	$131.29	$96.78	$118.17	$139.89	$118.96	$137.86	$163.35	$137.31	$128.66	$171.00	$111.92	$137.22	$111.37	$156.13	$134.46	$113.02	$111.64
26	$135.66	$99.28	$120.98	$143.89	$122.13	$141.86	$168.45	$141.31	$132.30	$176.63	$114.63	$140.94	$114.17	$161.39	$138.46	$115.92	$114.54
27	$140.02	$101.77	$123.79	$147.89	$125.30	$145.87	$173.56	$145.31	$135.93	$182.25	$117.35	$144.67	$116.98	$166.65	$142.46	$118.82	$117.44
28	$144.38	$104.27	$126.59	$151.89	$128.48	$149.87	$178.66	$149.32	$139.56	$187.88	$120.06	$148.40	$119.78	$171.91	$146.46	$121.72	$120.34
29	$148.75	$106.76	$129.40	$155.89	$131.65	$153.87	$183.77	$153.32	$143.20	$193.51	$122.77	$152.12	$122.59	$177.17	$150.47	$124.61	$123.23
30	$153.11	$109.26	$132.20	$159.90	$134.83	$157.87	$188.88	$157.32	$146.83	$199.13	$125.49	$155.85	$125.40	$182.43	$154.47	$127.51	$126.13
31	$157.47	$111.75	$135.01	$163.90	$138.00	$161.87	$193.98	$161.32	$150.47	$204.76	$128.20	$159.57	$128.20	$187.69	$158.47	$130.41	$129.03
32	$161.84	$114.25	$137.82	$167.90	$141.17	$165.88	$199.09	$165.32	$154.10	$210.39	$130.92	$163.30	$131.01	$192.95	$162.47	$133.31	$131.93

33	$166.20	$116.75	$140.62	$171.90	$144.35	$169.88	$204.19	$169.33	$157.73	$216.01	$133.63	$167.03	$133.81	$198.21	$166.47	$136.21	$134.83
34	$170.56	$119.24	$143.43	$175.90	$147.52	$173.88	$209.30	$173.33	$161.37	$221.64	$136.34	$170.75	$136.62	$203.47	$170.48	$139.10	$137.72
35	$174.93	$121.74	$146.23	$179.91	$150.70	$177.88	$214.41	$177.33	$165.00	$227.27	$139.06	$174.48	$139.43	$208.72	$174.48	$142.00	$140.62
36	$179.29	$124.23	$149.04	$183.91	$153.87	$181.88	$219.51	$181.33	$168.64	$232.90	$141.77	$178.20	$142.23	$213.98	$178.48	$144.90	$143.52
37	$183.65	$126.73	$151.85	$187.91	$157.04	$185.89	$224.62	$185.33	$172.27	$238.52	$144.49	$181.93	$145.04	$219.24	$182.48	$147.80	$146.42
38	$188.02	$129.23	$154.65	$191.91	$160.22	$189.89	$229.72	$189.34	$175.90	$244.15	$147.20	$185.66	$147.84	$224.50	$186.48	$150.70	$149.32
39	$192.38	$131.72	$157.46	$195.91	$163.39	$193.89	$234.83	$193.34	$179.54	$249.78	$149.91	$189.38	$150.65	$229.76	$190.49	$153.59	$152.21
40	$196.74	$134.22	$160.26	$199.92	$166.57	$197.89	$239.94	$197.34	$183.17	$255.40	$152.63	$193.11	$153.46	$235.02	$194.49	$156.49	$155.11
41	$200.40	$136.71	$163.07	$203.92	$169.74	$201.89	$245.04	$201.34	$186.81	$261.03	$155.34	$196.83	$156.26	$240.28	$198.49	$159.39	$158.01
42	$203.85	$139.21	$165.88	$207.92	$172.91	$205.90	$250.15	$205.34	$190.44	$266.66	$158.06	$200.56	$159.07	$245.54	$202.49	$162.29	$160.91
43	$207.30	$141.70	$168.68	$211.92	$176.09	$209.90	$255.25	$209.35	$194.07	$272.28	$160.77	$204.29	$161.87	$250.80	$206.49	$165.19	$163.81
44	$210.75	$144.20	$171.49	$215.92	$179.26	$213.90	$260.36	$213.35	$197.71	$277.91	$163.48	$208.01	$164.68	$256.06	$210.50	$168.08	$166.70
45	$214.20	n/a	$174.29	$219.93	$182.44	$217.90	$265.47	$217.35	$201.34	$283.54	$166.20	$211.74	$167.49	$261.32	$214.50	$170.98	$169.60
46	$217.65	n/a	$177.10	$223.93	$185.61	$221.90	$270.57	$221.35	$204.98	$289.16	$168.91	$215.46	$170.29	$266.57	$218.50	$173.88	$172.50
47	$221.10	n/a	$179.91	$227.93	$188.78	$225.91	$275.68	$225.35	$208.61	$294.79	$171.63	$219.19	$173.10	$271.83	$222.50	$176.78	$175.40
48	$224.55	n/a	$182.71	$231.93	$191.96	$229.91	$280.78	$229.36	$212.24	$300.42	$174.34	$222.92	$175.90	$277.09	$226.50	$179.68	$178.30
49	$228.00	n/a	$185.52	$235.93	$195.13	$233.91	$285.89	$233.36	$215.88	$306.05	$177.05	$226.64	$178.71	$282.35	$230.51	$182.57	$181.19
50	$231.45	n/a	$188.32	$239.94	$198.31	$237.91	$291.00	$237.36	$219.51	$311.67	$179.77	$230.37	$181.52	$287.61	$234.51	$185.47	$184.09
51	$234.90	n/a	$191.13	$243.94	$201.48	$241.91	$296.10	$241.36	$223.15	$317.30	$182.48	$234.09	$184.32	$292.87	$238.51	$188.37	$186.99
52	$238.35	n/a	$193.94	$247.94	$204.65	$245.92	$301.21	$245.36	$226.78	$322.93	$185.20	$237.82	$187.13	$298.13	$242.51	$191.27	$189.89
53	$241.80	n/a	$196.74	$251.94	$207.83	$249.92	$306.31	$249.37	$230.41	$328.55	$187.91	$241.55	$189.93	$303.39	$246.51	$194.17	$192.79
54	$245.25	n/a	$199.55	$255.94	$211.00	$253.92	$311.42	$253.37	$234.05	$334.18	$190.62	$245.27	$192.74	$308.65	$250.52	$197.06	$195.68
55	$248.70	n/a	$202.35	$259.95	$214.18	$257.92	$316.53	$257.37	$237.68	$339.81	$193.34	$249.00	$195.55	$313.91	$254.52	$199.96	$198.58
56	$252.15	n/a	$205.16	$263.95	$217.35	$261.92	$321.63	$261.37	$241.32	$345.43	$196.05	$252.72	$198.35	$319.17	$258.52	$202.86	$201.48
57	$255.60	n/a	$207.97	$267.95	$220.52	$265.93	$326.74	$265.37	$244.95	$351.06	$198.77	$256.45	$201.16	$324.42	$262.52	$205.76	$204.38
58	$259.05	n/a	$210.77	$271.95	$223.70	$269.93	$331.84	$269.38	$248.58	$356.69	$201.48	$260.18	$203.96	$329.68	$266.52	$208.66	$207.28
59	$262.50	n/a	$213.58	$275.95	$226.87	$273.93	$336.95	$273.38	$252.22	$362.32	$204.19	$263.90	$206.77	$334.94	$270.53	$211.55	$210.17
60	$265.95	n/a	$216.38	$279.96	$230.05	$277.93	$342.06	$277.38	$255.85	$367.94	$206.91	$267.63	$209.58	$340.20	$274.53	$214.45	$213.07
61	$269.40	n/a	$219.19	$283.96	$233.22	$281.93	$347.16	$281.38	$259.49	$373.57	$209.62	$271.35	$212.38	$345.46	$278.53	$217.35	$215.97
62	$272.85	n/a	$222.00	$287.96	$236.39	$285.94	$352.27	$285.38	$263.12	$379.20	$212.34	$275.08	$215.19	$350.72	$282.53	$220.25	$218.87
63	$276.30	n/a	$224.80	$291.96	$239.57	$289.94	$357.37	$289.39	$266.75	$384.82	$215.05	$278.81	$217.99	$355.98	$286.53	$223.15	$221.77
64	$279.75	n/a	$227.61	$295.96	$242.74	$293.94	$362.48	$293.39	$270.39	$390.45	$217.76	$282.53	$220.80	$361.24	$290.54	$226.04	$224.66
65	$283.20	n/a	$230.41	$299.97	$245.92	$297.94	$367.59	$297.39	$274.02	$396.08	$220.48	$286.26	$223.61	$366.50	$294.54	$228.94	$227.56
66	$286.65	n/a	$233.22	$303.97	$249.09	$301.94	$372.69	$301.39	$277.66	$401.70	$223.19	$289.98	$226.41	$371.76	$298.54	$231.84	$230.46
67	n/a	n/a	$236.03	$307.97	$252.26	$305.95	$377.80	$305.39	$281.29	n/a	n/a	n/a	n/a	n/a	n/a	n/a	n/a
68	n/a	n/a	$238.83	$311.97	$255.44	$309.95	$382.90	$309.40	$284.92	n/a	n/a	n/a	n/a	n/a	n/a	n/a	n/a
69	n/a	n/a	$241.64	$315.97	$258.61	$313.95	$388.01	$313.40	$288.56	n/a	n/a	n/a	n/a	n/a	n/a	n/a	n/a
70	n/a	n/a	$244.44	$319.98	$261.79	$317.95	$393.12	$317.40	$292.19	n/a	n/a	n/a	n/a	n/a	n/a	n/a	n/a

Express Mail International Commercial Plus Prices

Weight Not Over (lb)	Group 1	Group 2	Group 3	Group 4	Group 5	Group 6	Group 7	Group 8	Group 9	Group 10	Group 11	Group 12	Group 13	Group 14	Group 15	Group 16	Group 17
0.5	$24.86	$32.30	$32.30	$34.16	$32.30	$32.30	$33.84	$32.30	$32.30	$32.30	$34.89	$35.18	$32.30	$32.30	$32.30	$32.30	$32.30
1	$27.97	$33.79	$36.08	$36.68	$33.58	$36.51	$39.06	$38.04	$37.19	$35.28	$37.10	$37.27	$35.57	$33.45	$34.81	$34.21	$34.47
2	$31.32	$36.81	$40.55	$41.23	$37.78	$40.63	$43.44	$42.08	$40.72	$39.74	$41.14	$42.33	$39.44	$38.00	$38.68	$38.17	$38.25
3	$34.68	$39.82	$45.01	$45.77	$41.99	$44.75	$47.81	$46.11	$44.24	$44.20	$45.18	$47.39	$43.31	$42.54	$42.54	$42.12	$42.03
4	$38.04	$42.84	$49.47	$50.32	$46.20	$48.88	$52.19	$50.15	$47.77	$48.66	$49.22	$52.45	$47.18	$47.09	$46.41	$46.07	$45.82
5	$41.40	$45.86	$53.93	$54.87	$50.41	$53.00	$56.57	$54.19	$51.30	$53.38	$53.25	$57.50	$51.04	$51.64	$50.28	$50.02	$49.60
6	$45.26	$48.11	$57.21	$58.65	$53.51	$56.78	$61.29	$57.63	$54.74	$58.77	$55.76	$61.03	$53.64	$55.93	$53.98	$52.87	$52.28
7	$49.39	$50.36	$60.48	$62.43	$56.61	$60.56	$66.00	$61.07	$58.18	$64.16	$58.27	$64.56	$56.23	$60.22	$57.67	$55.72	$54.95
8	$53.57	$52.62	$63.75	$66.22	$59.71	$64.35	$70.72	$64.52	$61.63	$69.56	$60.78	$68.09	$58.82	$64.52	$61.37	$58.57	$57.63
9	$57.75	$54.87	$67.02	$70.00	$62.82	$68.13	$75.44	$67.96	$65.07	$74.95	$63.28	$71.61	$61.41	$68.81	$65.07	$61.41	$60.31
10	$61.93	$57.12	$70.30	$73.78	$65.92	$71.91	$80.16	$71.40	$68.51	$80.34	$65.79	$75.14	$64.01	$73.10	$68.77	$64.26	$62.99
11	$66.12	$59.20	$72.89	$77.48	$68.85	$75.61	$84.87	$75.10	$71.87	$85.73	$68.30	$78.58	$66.60	$77.82	$72.46	$66.94	$65.66
12	$70.30	$61.29	$75.48	$81.18	$71.78	$79.31	$89.62	$78.80	$75.23	$91.13	$70.81	$82.03	$69.19	$82.54	$76.16	$69.62	$68.34
13	$74.48	$63.37	$78.07	$84.87	$74.72	$83.00	$94.47	$82.49	$78.58	$96.52	$73.31	$85.47	$71.78	$87.25	$79.86	$72.29	$71.02
14	$78.66	$65.45	$80.67	$88.57	$77.65	$86.70	$99.32	$86.19	$81.94	$101.91	$75.82	$88.91	$74.38	$91.97	$83.56	$74.97	$73.70
15	$82.84	$67.53	$83.26	$92.27	$80.58	$90.40	$104.17	$89.89	$85.30	$107.30	$78.33	$92.35	$76.97	$96.69	$87.25	$77.65	$76.37
16	$87.02	$69.62	$85.85	$95.97	$83.51	$94.10	$109.03	$93.59	$88.66	$112.70	$80.84	$95.80	$79.56	$101.62	$90.95	$80.33	$79.05
17	$91.21	$71.70	$88.44	$99.66	$86.45	$97.79	$113.88	$97.28	$92.01	$118.09	$83.34	$99.24	$82.15	$106.66	$94.65	$83.00	$81.73
18	$95.39	$73.78	$91.04	$103.36	$89.38	$101.49	$118.73	$100.98	$95.37	$123.48	$85.85	$102.68	$84.75	$111.70	$98.35	$85.68	$84.41
19	$99.57	$75.86	$93.63	$107.06	$92.31	$105.19	$123.58	$104.68	$98.73	$128.87	$88.36	$106.12	$87.34	$116.74	$102.04	$88.36	$87.08
20	$103.75	$78.14	$96.22	$110.76	$95.24	$108.89	$128.43	$108.38	$102.09	$134.27	$90.87	$109.57	$89.93	$121.78	$105.74	$91.04	$89.76
21	$107.93	$80.54	$98.81	$114.45	$98.18	$112.58	$133.28	$112.07	$105.44	$139.66	$93.37	$113.01	$92.52	$126.82	$109.44	$93.71	$92.44
22	$112.11	$82.93	$101.41	$118.15	$101.11	$116.28	$138.13	$115.77	$108.80	$145.05	$95.88	$116.45	$95.12	$131.86	$113.14	$96.39	$95.12
23	$116.29	$85.32	$104.00	$121.85	$104.04	$119.98	$142.98	$119.47	$112.16	$150.44	$98.39	$119.89	$97.71	$136.90	$116.83	$99.07	$97.79
24	$120.48	$87.71	$106.59	$125.55	$106.97	$123.68	$147.83	$123.17	$115.52	$155.84	$100.90	$123.34	$100.30	$141.94	$120.53	$101.75	$100.47
25	$124.66	$90.10	$109.18	$129.24	$109.91	$127.37	$152.68	$126.86	$118.87	$161.23	$103.40	$126.78	$102.89	$146.98	$124.23	$104.42	$103.15
26	$128.84	$92.49	$111.78	$132.94	$112.84	$131.07	$157.53	$130.56	$122.23	$166.62	$105.91	$130.22	$105.49	$152.02	$127.93	$107.10	$105.83
27	$133.02	$94.89	$114.37	$136.64	$115.77	$134.77	$162.38	$134.26	$125.59	$172.01	$108.42	$133.66	$108.08	$157.06	$131.62	$109.78	$108.50
28	$137.20	$97.28	$116.96	$140.34	$118.70	$138.47	$167.23	$137.96	$128.95	$177.41	$110.93	$137.11	$110.67	$162.10	$135.32	$112.46	$111.18
29	$141.38	$99.67	$119.55	$144.03	$121.64	$142.16	$172.08	$141.65	$132.30	$182.80	$113.43	$140.55	$113.26	$167.14	$139.02	$115.13	$113.86
30	$145.56	$102.06	$122.15	$147.73	$124.57	$145.86	$176.93	$145.35	$135.66	$188.19	$115.94	$143.99	$115.86	$172.18	$142.72	$117.81	$116.54
31	$149.75	$104.45	$124.74	$151.43	$127.50	$149.56	$181.78	$149.05	$139.02	$193.58	$118.45	$147.43	$118.45	$177.22	$146.41	$120.49	$119.21
32	$153.93	$106.85	$127.33	$155.13	$130.43	$153.26	$186.63	$152.75	$142.38	$198.98	$120.96	$150.88	$121.04	$182.26	$150.11	$123.17	$121.89
33	$158.11	$109.24	$129.92	$158.82	$133.37	$156.95	$191.48	$156.44	$145.73	$204.37	$123.46	$154.32	$123.63	$187.30	$153.81	$125.84	$124.57

34	$162.29	$111.63	$132.52	$162.52	$136.30	$160.65	$196.34	$160.14	$149.09	$209.76	$125.97	$157.76	$126.23	$192.34	$157.51	$128.52	$127.25
35	$166.47	$114.02	$135.11	$166.22	$139.23	$164.35	$201.19	$163.84	$152.45	$215.15	$128.48	$161.20	$128.82	$197.38	$161.20	$131.20	$129.92
36	$170.65	$116.41	$137.70	$169.92	$142.16	$168.05	$206.04	$167.54	$155.81	$220.55	$130.99	$164.65	$131.41	$202.42	$164.90	$133.88	$132.60
37	$174.83	$118.80	$140.29	$173.61	$145.10	$171.74	$210.89	$171.23	$159.16	$225.94	$133.49	$168.09	$134.00	$207.46	$168.60	$136.55	$135.28
38	$179.02	$121.20	$142.89	$177.31	$148.03	$175.44	$215.74	$174.93	$162.52	$231.33	$136.00	$171.53	$136.60	$212.50	$172.30	$139.23	$137.96
39	$183.20	$123.59	$145.48	$181.01	$150.96	$179.14	$220.59	$178.63	$165.88	$236.72	$138.51	$174.97	$139.19	$217.54	$175.99	$141.91	$140.63
40	$187.38	$125.98	$148.07	$184.71	$153.89	$182.84	$225.44	$182.33	$169.24	$242.12	$141.02	$178.42	$141.78	$222.58	$179.69	$144.59	$143.31
41	$191.56	$128.37	$150.66	$188.40	$156.83	$186.53	$230.29	$186.02	$172.59	$247.51	$143.52	$181.86	$144.37	$227.62	$183.39	$147.26	$145.99
42	$195.74	$130.76	$153.26	$192.10	$159.76	$190.23	$235.14	$189.72	$175.95	$252.90	$146.03	$185.30	$146.97	$232.66	$187.09	$149.94	$148.67
43	$199.92	$133.16	$155.85	$195.80	$162.69	$193.93	$239.99	$193.42	$179.31	$258.29	$148.54	$188.74	$149.56	$237.70	$190.78	$152.62	$151.34
44	$204.11	$135.55	$158.44	$199.50	$165.62	$197.63	$244.84	$197.12	$182.67	$263.69	$151.05	$192.19	$152.15	$242.74	$194.48	$155.30	$154.02
45	$208.29	n/a	$161.03	$203.19	$168.56	$201.32	$249.69	$200.81	$186.02	$269.08	$153.55	$195.63	$154.74	$247.78	$198.18	$157.97	$156.70
46	$212.47	n/a	$163.63	$206.89	$171.49	$205.02	$254.54	$204.51	$189.38	$274.47	$156.06	$199.07	$157.34	$252.82	$201.88	$160.65	$159.38
47	$216.65	n/a	$166.22	$210.59	$174.42	$208.72	$259.39	$208.21	$192.74	$279.86	$158.57	$202.51	$159.93	$257.86	$205.57	$163.33	$162.05
48	$220.83	n/a	$168.81	$214.29	$177.35	$212.42	$264.24	$211.91	$196.10	$285.26	$161.08	$205.96	$162.52	$262.90	$209.27	$166.01	$164.73
49	$225.01	n/a	$171.40	$217.98	$180.29	$216.11	$269.09	$215.60	$199.45	$290.65	$163.58	$209.40	$165.11	$267.94	$212.97	$168.68	$167.41
50	$229.19	n/a	$174.00	$221.68	$183.22	$219.81	$273.94	$219.30	$202.81	$296.04	$166.09	$212.84	$167.71	$272.98	$216.67	$171.36	$170.09
51	$233.38	n/a	$176.59	$225.38	$186.15	$223.51	$278.79	$223.00	$206.17	$301.43	$168.60	$216.28	$170.30	$278.02	$220.36	$174.04	$172.76
52	$237.56	n/a	$179.18	$229.08	$189.08	$227.21	$283.65	$226.70	$209.53	$306.83	$171.11	$219.73	$172.89	$283.06	$224.06	$176.72	$175.44
53	$241.74	n/a	$181.77	$232.77	$192.02	$230.90	$288.50	$230.39	$212.88	$312.22	$173.61	$223.17	$175.48	$288.10	$227.76	$179.39	$178.12
54	$245.25	n/a	$184.37	$236.47	$194.95	$234.60	$293.35	$234.09	$216.24	$317.61	$176.12	$226.61	$178.08	$293.14	$231.46	$182.07	$180.80
55	$248.70	n/a	$186.96	$240.17	$197.88	$238.30	$298.20	$237.79	$219.60	$323.00	$178.63	$230.05	$180.67	$298.18	$235.15	$184.75	$183.47
56	$252.15	n/a	$189.55	$243.87	$200.81	$242.00	$303.05	$241.49	$222.96	$328.40	$181.14	$233.50	$183.26	$303.22	$238.85	$187.43	$186.15
57	$255.60	n/a	$192.14	$247.56	$203.75	$245.69	$307.90	$245.18	$226.31	$333.79	$183.64	$236.94	$185.85	$308.26	$242.55	$190.10	$188.83
58	$259.05	n/a	$194.74	$251.26	$206.68	$249.39	$312.75	$248.88	$229.67	$339.18	$186.15	$240.38	$188.45	$313.30	$246.25	$192.78	$191.51
59	$262.50	n/a	$197.33	$254.96	$209.61	$253.09	$317.60	$252.58	$233.03	$344.57	$188.66	$243.82	$191.04	$318.34	$249.94	$195.46	$194.18
60	$265.95	n/a	$199.92	$258.66	$212.54	$256.79	$322.45	$256.28	$236.39	$349.97	$191.17	$247.27	$193.63	$323.38	$253.64	$198.14	$196.86
61	$269.40	n/a	$202.51	$262.35	$215.48	$260.48	$327.30	$259.97	$239.74	$355.36	$193.67	$250.71	$196.22	$328.42	$257.34	$200.81	$199.54
62	$272.85	n/a	$205.11	$266.05	$218.41	$264.18	$332.15	$263.67	$243.10	$360.75	$196.18	$254.15	$198.82	$333.46	$261.04	$203.49	$202.22
63	$276.30	n/a	$207.70	$269.75	$221.34	$267.88	$337.00	$267.37	$246.46	$366.14	$198.69	$257.59	$201.41	$338.50	$264.73	$206.17	$204.89
64	$279.75	n/a	$210.29	$273.45	$224.27	$271.58	$341.85	$271.07	$249.82	$371.54	$201.20	$261.04	$204.00	$343.54	$268.43	$208.85	$207.57
65	$283.20	n/a	$212.88	$277.14	$227.21	$275.27	$346.70	$274.76	$253.17	$376.93	$203.70	$264.48	$206.59	$348.58	$272.13	$211.52	$210.25
66	$286.65	n/a	$215.48	$280.84	$230.14	$278.97	$351.55	$278.46	$256.53	$382.32	$206.21	$267.92	$209.19	$353.62	$275.83	$214.20	$212.93
67	n/a	n/a	$218.07	$284.54	$233.07	$282.67	$356.40	$282.16	$259.89	n/a	n/a	n/a	n/a	n/a	n/a	n/a	n/a
68	n/a	n/a	$220.66	$288.24	$236.00	$286.37	$361.25	$285.86	$263.25	n/a	n/a	n/a	n/a	n/a	n/a	n/a	n/a
69	n/a	n/a	$223.25	$291.93	$238.94	$290.06	$366.10	$289.55	$266.60	n/a	n/a	n/a	n/a	n/a	n/a	n/a	n/a
70	n/a	n/a	$225.85	$295.63	$241.87	$293.76	$370.96	$293.25	$269.96	n/a	n/a	n/a	n/a	n/a	n/a	n/a	n/a

Pickup On Demand Service

Add price specified for Parcel Post Pickup On Demand service (section 1405.6) for each Pickup On Demand stop.

Global Express Guaranteed Online Price Incentives

~~For selected destination countries, a discount of 10 percent will be applied to Global Express Guaranteed prices.~~

Global Express Guaranteed Permit Imprint Incentives

~~A discount of 10 percent will be applied to Global Express Guaranteed prices for customers who use approved software for mail preparation.~~

Express Mail International Online Price Incentives

~~For selected destination countries, a discount of 8 percent will be applied to Express Mail International prices.~~

Express Mail International Permit Imprint Incentives

~~A discount of 8 percent will be applied to Express Mail International prices for customers using approved software for mail preparation and Customs-related functions.~~

BILLING CODE 7710–12–C

2315 Outbound Priority Mail International

2315.2 Size and Weight Limitations [1 2]

* * * * *

	Length	Height	Thickness	Weight
Minimum	5.5 inches	3.5 inch	none	none
Maximum Parcels	79~~42~~ inches			70 pounds
	108 ~~79~~ inches in combined length and girth			
Flat Rate Envelopes	~~Nominal~~ Sizes ~~9.5 x 12.5 inches~~: No smaller than 5 x 10 inches and no larger than 9.5 x 15 inches as defined in the IMM ~~Priority Mail Gift Card: 10 x 7 inches~~ ~~Priority Mail Legal: 15 x 9.5 inches~~ ~~Priority Mail Window: 10 x 5 inches~~ ~~Priority Mail Small: 10 x 6 inches~~ ~~Priority Mail Padded: 12.5 x 9.5 inches~~			4 pounds
Parcel Flat Rate Boxes	Nominal Sizes: Large: ~~12.25 x 12.25 x 6.0 inches or 11.875 x 3.125 x 24.0625 inches~~ Various sizes as defined in the IMM. - not to exceed .5 cu. ft. Medium: ~~11.875 x 3.375 x 13.625 inches or 11 x 8.5 x 5.5 inches~~ Various sizes as defined in the IMM. - not to exceed .35 cu. ft.			20 pounds
Letter Post Flat Rate Boxes	Nominal Sizes: Small: ~~8.625 x 5.375 x 1.625 inches~~ Various sizes as defined in the IMM. - not to exceed .05 cu. ft. ~~DVD Box: 7.5625 x 5.4375 x 1.375 inches~~ ~~Large Video Box: 9.25 x 6.25 x 2~~			4 pounds

* * * * *

2315.4 Price Categories

The following price categories are available for the product specified in this section:

- Priority Mail International Flat Rate Envelope – Envelope provided or approved by the Postal Service
  - Canada and Mexico
  - All other countries

- Priority Mail International Flat Rate Boxes – Boxes provided or approved by the Postal Service
  - Canada and Mexico
  - All other countries

- Priority Mail International Parcels
  Subject to the provisions of the Universal Postal Union Convention, ordinary, uninsured Priority Mail International parcels include indemnity coverage in the postage prices. Indemnity is limited to the lesser of the actual value of the contents or the maximum indemnity based on weight.
  - Price Groups 1-17

- ~~Online Incentives~~
  ~~For selected destination countries, Online Incentives are available to customers who conduct Priority Mail International transactions online at usps.com or through an authorized PC Postage vendor. The discount applies only to the postage portion of Priority Mail International prices.~~

- ~~Permit Imprint Incentives~~
  ~~Available to customers who pay for postage by permit imprint and use approved software for mail preparation and Customs-related functions.~~

- *Commercial Base—For selected destination countries, available for customers who prepare and pay for Priority Mail International shipments via permit imprint when used in conjunction with Postal Service-supplied software and Customs-related functions, online at USPS.com, or by using an authorized PC Postage. The discount applies only to the postage portion of Priority Mail International prices.*
- *Commercial Plus—For selected destination countries, available for customers who use specifically authorized postage payment methods and must tender at least $100,000 per year of any combination of Priority Mail International, Express Mail International, or Global Express Guaranteed items. The discount applies only to the postage portion of Express Mail International prices.*

* * * * *

2315.7 Prices

Priority Mail International Retail Flat Rate Prices[1]

	Country Price Group	
	Canada & Mexico (1 & 2) ($)	**All Other Countries (3 through 17) ($)**
Flat Rate Envelopes	12.95	16.95
Letter Post Flat Rate Boxes ~~(Small, DVD, Large Video)~~	12.95	16.95
Medium Flat Rate Boxes	32.95	47.95
Large Flat Rate Boxes	39.95	60.95

Note

1. No additional discount is offered for Commercial Base or Commercial Plus.

Priority Mail International Parcels ~~Weight-Based~~ Retail Prices

Weight Not Over (lb.)	Price Groups																
	1	2	3	4	5	6	7	8	9	10	11	12	13	14	15	16	17
1	$23.25	$28.25	$34.75	$35.00	$35.00	$34.25	$34.75	$31.75	$31.50	$33.95	$37.00	$34.50	$30.00	$34.50	$31.75	$30.00	$30.00
2	$25.80	$31.80	$39.10	$39.55	$38.85	$37.90	$39.50	$36.00	$35.45	$38.10	$40.85	$38.65	$34.55	$38.75	$35.70	$34.25	$34.35
3	$28.35	$35.35	$43.45	$44.10	$42.70	$41.55	$44.25	$40.25	$39.40	$42.25	$44.70	$42.80	$39.10	$43.00	$39.65	$38.50	$38.70
4	$30.90	$38.90	$47.80	$48.65	$46.55	$45.20	$49.00	$44.50	$43.35	$46.40	$48.55	$46.95	$43.65	$47.25	$43.60	$42.75	$43.05
5	$33.45	$42.45	$52.15	$53.20	$50.40	$48.85	$53.75	$48.75	$47.30	$50.55	$52.40	$51.10	$48.20	$51.50	$47.55	$47.00	$47.40
6	$36.00	$44.80	$54.90	$57.15	$52.55	$52.70	$58.50	$52.10	$50.25	$54.70	$55.25	$53.85	$50.35	$54.45	$50.50	$49.35	$49.95
7	$38.55	$47.15	$57.65	$61.10	$54.70	$56.55	$63.25	$55.45	$53.20	$58.85	$58.10	$56.60	$52.50	$57.40	$53.45	$51.70	$52.50
8	$41.10	$49.50	$60.40	$65.05	$56.85	$60.40	$68.00	$58.80	$56.15	$63.00	$60.95	$59.35	$54.65	$60.35	$56.40	$54.05	$55.05
9	$43.65	$51.85	$63.15	$69.00	$59.00	$64.25	$72.75	$62.15	$59.10	$67.15	$63.80	$62.10	$56.80	$63.30	$59.35	$56.40	$57.60
10	$46.20	$54.20	$65.90	$72.95	$61.15	$68.10	$77.50	$65.50	$62.05	$71.30	$66.65	$64.85	$58.95	$66.25	$62.30	$58.75	$60.15
11	$48.75	$56.15	$68.65	$76.90	$63.20	$71.55	$82.45	$68.95	$65.00	$75.45	$69.60	$67.60	$60.90	$69.20	$65.75	$60.60	$62.30
12	$51.30	$58.10	$71.40	$80.85	$65.25	$75.00	$87.40	$72.40	$67.95	$79.60	$72.55	$70.35	$62.85	$72.15	$69.20	$62.45	$64.45
13	$53.85	$60.05	$74.15	$84.80	$67.30	$78.45	$92.35	$75.85	$70.90	$83.75	$75.50	$73.10	$64.80	$75.10	$72.65	$64.30	$66.60
14	$56.40	$62.00	$76.90	$88.75	$69.35	$81.90	$97.30	$79.30	$73.85	$87.90	$78.45	$75.85	$66.75	$78.05	$76.10	$66.15	$68.75
15	$58.95	$63.95	$79.65	$92.70	$71.40	$85.35	$102.25	$82.75	$76.80	$92.05	$81.40	$78.60	$68.70	$81.00	$79.55	$68.00	$70.90
16	$61.50	$65.90	$82.40	$96.65	$73.45	$88.80	$107.20	$86.20	$79.75	$96.20	$84.35	$81.35	$70.65	$83.95	$83.00	$69.85	$73.05
17	$64.05	$67.85	$85.15	$100.60	$75.50	$92.25	$112.15	$89.65	$82.70	$100.35	$87.30	$84.10	$72.60	$86.90	$86.45	$71.70	$75.20
18	$66.60	$69.80	$87.90	$104.55	$77.55	$95.70	$117.10	$93.10	$85.65	$104.50	$90.25	$86.85	$74.55	$89.85	$89.90	$73.55	$77.35
19	$69.15	$71.75	$90.65	$108.50	$79.60	$99.15	$122.05	$96.55	$88.60	$108.65	$93.20	$89.60	$76.50	$92.80	$93.35	$75.40	$79.50
20	$71.70	$73.70	$93.40	$112.45	$81.65	$102.60	$127.00	$100.00	$91.55	$112.80	$96.15	$92.35	$78.45	$95.75	$96.80	$77.25	$81.65
21	$74.25	$75.65	$96.15	$116.40	$83.70	$106.05	$131.95	$103.45	$94.50	$116.95	$99.10	$95.10	$80.40	$98.70	$100.25	$79.10	$83.80
22	$76.80	$77.60	$98.90	$120.35	$85.75	$109.50	$136.90	$106.90	$97.45	$121.10	$102.05	$97.85	$82.35	$101.65	$103.70	$80.95	$85.95
23	$79.35	$79.55	$101.65	$124.30	$87.80	$112.95	$141.85	$110.35	$100.40	$125.25	$105.00	$100.60	$84.30	$104.60	$107.15	$82.80	$88.10
24	$81.90	$81.50	$104.40	$128.25	$89.85	$116.40	$146.80	$113.80	$103.35	$129.40	$107.95	$103.35	$86.25	$107.55	$110.60	$84.65	$90.25
25	$84.45	$83.45	$107.15	$132.20	$91.90	$119.85	$151.75	$117.25	$106.30	$133.55	$110.90	$106.10	$88.20	$110.50	$114.05	$86.50	$92.40
26	$87.00	$85.40	$109.90	$136.15	$93.95	$123.30	$156.70	$120.70	$109.25	$137.70	$113.85	$108.85	$90.15	$113.45	$117.50	$88.35	$94.55
27	$89.55	$87.35	$112.65	$140.10	$96.00	$126.75	$161.65	$124.15	$112.20	$141.85	$116.80	$111.60	$92.10	$116.40	$120.95	$90.20	$96.70
28	$92.10	$89.30	$115.40	$144.05	$98.05	$130.20	$166.60	$127.60	$115.15	$146.00	$119.75	$114.35	$94.05	$119.35	$124.40	$92.05	$98.85
29	$94.65	$91.25	$118.15	$148.00	$100.10	$133.65	$171.55	$131.05	$118.10	$150.15	$122.70	$117.10	$96.00	$122.30	$127.85	$93.90	$101.00
30	$97.20	$93.20	$120.90	$151.95	$102.15	$137.10	$176.50	$134.50	$121.05	$154.30	$125.65	$119.85	$97.95	$125.25	$131.30	$95.75	$103.15
31	$99.75	$95.15	$123.65	$155.90	$104.20	$140.55	$181.45	$137.95	$124.00	$158.45	$128.60	$122.60	$99.90	$128.20	$134.75	$97.60	$105.30
32	$102.30	$97.10	$126.40	$159.85	$106.25	$144.00	$186.40	$141.40	$126.95	$162.60	$131.55	$125.35	$101.85	$131.15	$138.20	$99.45	$107.45
33	$104.85	$99.05	$129.15	$163.80	$108.30	$147.45	$191.35	$144.85	$129.90	$166.75	$134.50	$128.10	$103.80	$134.10	$141.65	$101.30	$109.60
34	$107.40	$101.00	$131.90	$167.75	$110.35	$150.90	$196.30	$148.30	$132.85	$170.90	$137.45	$130.85	$105.75	$137.05	$145.10	$103.15	$111.75

35	$109.95	$102.95	$134.65	$171.70	$112.40	$154.35	$201.25	$151.75	$135.80	$175.05	$140.40	$133.60	$107.70	$140.00	$148.55	$105.00	$113.90
36	$112.50	$104.90	$137.40	$175.65	$114.45	$157.80	$206.20	$155.20	$138.75	$179.20	$143.35	$136.35	$109.65	$142.95	$152.00	$106.85	$116.05
37	$115.05	$106.85	$140.15	$179.60	$116.50	$161.25	$211.15	$158.65	$141.70	$183.35	$146.30	$139.10	$111.60	$145.90	$155.45	$108.70	$118.20
38	$117.60	$108.80	$142.90	$183.55	$118.55	$164.70	$216.10	$162.10	$144.65	$187.50	$149.25	$141.85	$113.55	$148.85	$158.90	$110.55	$120.35
39	$120.15	$110.75	$145.65	$187.50	$120.60	$168.15	$221.05	$165.55	$147.60	$191.65	$152.20	$144.60	$115.50	$151.80	$162.35	$112.40	$122.50
40	$122.70	$112.70	$148.40	$191.45	$122.65	$171.60	$226.00	$169.00	$150.55	$195.80	$155.15	$147.35	$117.45	$154.75	$165.80	$114.25	$124.65
41	$125.25	$114.65	$151.15	$195.40	$124.70	$175.05	$230.95	$172.45	$153.50	$199.95	$158.10	$150.10	$119.40	$157.70	$169.25	$116.10	$126.80
42	$127.80	$116.60	$153.90	$199.35	$126.75	$178.50	$235.90	$175.90	$156.45	$204.10	$161.05	$152.85	$121.35	$160.65	$172.70	$117.95	$128.95
43	$130.35	$118.55	$156.65	$203.30	$128.80	$181.95	$240.85	$179.35	$159.40	$208.25	$164.00	$155.60	$123.30	$163.60	$176.15	$119.80	$131.10
44	$132.90	$120.50	$159.40	$207.25	$130.85	$185.40	$245.80	$182.80	$162.35	$212.40	$166.95	$158.35	$125.25	$166.55	$179.60	$121.65	$133.25
45	$135.45	-	$162.15	$211.20	$132.90	$188.85	$250.75	$186.25	$165.30	$216.55	$169.90	$161.10	$127.20	$169.50	$183.05	$123.50	-
46	$138.00	-	$164.90	$215.15	$134.95	$192.30	$255.70	$189.70	$168.25	$220.70	$172.85	$163.85	$129.15	$172.45	$186.50	$125.35	-
47	$140.55	-	$167.65	$219.10	$137.00	$195.75	$260.65	$193.15	$171.20	$224.85	$175.80	$166.60	$131.10	$175.40	$189.95	$127.20	-
48	$143.10	-	$170.40	$223.05	$139.05	$199.20	$265.60	$196.60	$174.15	$229.00	$178.75	$169.35	$133.05	$178.35	$193.40	$129.05	-
49	$145.65	-	$173.15	$227.00	$141.10	$202.65	$270.55	$200.05	$177.10	$233.15	$181.70	$172.10	$135.00	$181.30	$196.85	$130.90	-
50	$148.20	-	$175.90	$230.95	$143.15	$206.10	$275.50	$203.50	$180.05	$237.30	$184.65	$174.85	$136.95	$184.25	$200.30	$132.75	-
51	$150.75	-	$178.65	$234.90	$145.20	$209.55	$280.45	$206.95	$183.00	$241.45	$187.60	$177.60	$138.90	$187.20	$203.75	$134.60	-
52	$153.30	-	$181.40	$238.85	$147.25	$213.00	$285.40	$210.40	$185.95	$245.60	$190.55	$180.35	$140.85	$190.15	$207.20	$136.45	-
53	$155.85	-	$184.15	$242.80	$149.30	$216.45	$290.35	$213.85	$188.90	$249.75	$193.50	$183.10	$142.80	$193.10	$210.65	$138.30	-
54	$158.40	-	$186.90	$246.75	$151.35	$219.90	$295.30	$217.30	$191.85	$253.90	$196.45	$185.85	$144.75	$196.05	$214.10	$140.15	-
55	$160.95	-	$189.65	$250.70	$153.40	$223.35	$300.25	$220.75	$194.80	$258.05	$199.40	$188.60	$146.70	$199.00	$217.55	$142.00	-
56	$163.50	-	$192.40	$254.65	$155.45	$226.80	$305.20	$224.20	$197.75	$262.20	$202.35	$191.35	$148.65	$201.95	$221.00	$143.85	-
57	$166.05	-	$195.15	$258.60	$157.50	$230.25	$310.15	$227.65	$200.70	$266.35	$205.30	$194.10	$150.60	$204.90	$224.45	$145.70	-
58	$168.60	-	$197.90	$262.55	$159.55	$233.70	$315.10	$231.10	$203.65	$270.50	$208.25	$196.85	$152.55	$207.85	$227.90	$147.55	-
59	$171.15	-	$200.65	$266.50	$161.60	$237.15	$320.05	$234.55	$206.60	$274.65	$211.20	$199.60	$154.50	$210.80	$231.35	$149.40	-
60	$173.70	-	$203.40	$270.45	$163.65	$240.60	$325.00	$238.00	$209.55	$278.80	$214.15	$202.35	$156.45	$213.75	$234.80	$151.25	-
61	$176.25	-	$206.15	$274.40	$165.70	$244.05	$329.95	$241.45	$212.50	$282.95	$217.10	$205.10	$158.40	$216.70	$238.25	$153.10	-
62	$178.80	-	$208.90	$278.35	$167.75	$247.50	$334.90	$244.90	$215.45	$287.10	$220.05	$207.85	$160.35	$219.65	$241.70	$154.95	-
63	$181.35	-	$211.65	$282.30	$169.80	$250.95	$339.85	$248.35	$218.40	$291.25	$223.00	$210.60	$162.30	$222.60	$245.15	$156.80	-
64	$183.90	-	$214.40	$286.25	$171.85	$254.40	$344.80	$251.80	$221.35	$295.40	$225.95	$213.35	$164.25	$225.55	$248.60	$158.65	-
65	$186.45	-	$217.15	$290.20	$173.90	$257.85	$349.75	$255.25	$224.30	$299.55	$228.90	$216.10	$166.20	$228.50	$252.05	$160.50	-
66	$189.00	-	$219.90	$294.15	$175.95	$261.30	$354.70	$258.70	$227.25	$303.70	$231.85	$218.85	$168.15	$231.45	$255.50	$162.35	-
67	-	-	$222.65	$298.10	$178.00	$264.75	$359.65	$262.15	$230.20	-	-	-	-	-	-	$164.20	-
68	-	-	$225.40	$302.05	$180.05	$268.20	$364.60	$265.60	$233.15	-	-	-	-	-	-	$166.05	-
69	-	-	$228.15	$306.00	$182.10	$271.65	$369.55	$269.05	$236.10	-	-	-	-	-	-	$167.90	-
70	-	-	$230.90	$309.95	$184.15	$275.10	$374.50	$272.50	$239.05	-	-	-	-	-	-	$169.75	-

Priority Mail International Commercial Base Prices

Weight Not Over (lb)	Group 1	Group 2	Group 3	Group 4	Group 5	Group 6	Group 7	Group 8	Group 9	Group 10	Group 11	Group 12	Group 13	Group 14	Group 15	Group 16	Group 17
1	$22.09	$27.13	$33.01	$34.87	$33.25	$32.54	$33.01	$30.16	$31.23	$32.25	$36.25	$32.78	$30.00	$32.78	$31.25	$30.00	$30.00
2	$24.51	$30.21	$37.15	$38.79	$36.91	$36.01	$37.69	$34.20	$34.27	$36.20	$39.05	$36.72	$33.37	$36.81	$34.66	$32.54	$32.63
3	$26.93	$33.58	$41.28	$42.71	$40.57	$39.47	$42.49	$38.24	$37.43	$40.14	$42.47	$40.66	$37.15	$40.85	$38.06	$36.58	$36.77
4	$29.36	$36.96	$45.41	$46.63	$44.22	$42.94	$47.29	$42.28	$41.18	$44.08	$46.12	$44.60	$41.47	$44.89	$41.47	$40.61	$40.90
5	$31.78	$40.33	$49.54	$50.55	$47.88	$46.41	$52.09	$46.31	$44.94	$48.02	$49.78	$48.55	$45.79	$48.93	$45.17	$44.65	$45.03
6	$34.20	$42.56	$52.16	$54.46	$49.92	$50.07	$56.89	$49.50	$47.74	$51.97	$52.49	$51.16	$47.83	$51.73	$48.28	$46.88	$47.45
7	$36.62	$44.79	$54.77	$58.38	$51.97	$53.72	$61.69	$52.68	$50.54	$55.91	$55.20	$53.77	$49.88	$54.53	$51.69	$49.12	$49.88
8	$39.05	$47.03	$57.38	$62.30	$54.01	$57.38	$66.49	$55.86	$53.34	$59.85	$57.90	$56.38	$51.92	$57.33	$55.09	$51.35	$52.30
9	$41.47	$49.26	$59.99	$66.22	$56.05	$61.04	$71.29	$59.04	$56.15	$63.79	$60.61	$59.00	$53.96	$60.14	$58.50	$53.58	$54.72
10	$43.89	$51.49	$62.61	$70.14	$58.09	$64.70	$76.10	$62.23	$58.95	$67.74	$63.32	$61.61	$56.00	$62.94	$61.90	$55.81	$57.14
11	$46.31	$53.34	$65.22	$74.06	$60.04	$67.97	$80.90	$65.50	$61.75	$71.68	$66.12	$64.22	$57.86	$65.74	$65.31	$57.57	$59.19
12	$48.74	$55.20	$67.83	$77.98	$61.99	$71.25	$85.70	$68.78	$64.69	$75.62	$68.92	$66.83	$59.71	$68.54	$68.72	$59.33	$61.23
13	$51.16	$57.05	$70.44	$81.90	$63.94	$74.53	$90.50	$72.06	$67.73	$79.56	$71.73	$69.45	$61.56	$71.35	$72.12	$61.09	$63.27
14	$53.58	$58.90	$73.06	$85.82	$65.88	$77.81	$95.30	$75.34	$70.78	$83.51	$74.53	$72.06	$63.41	$74.15	$75.53	$62.84	$65.31
15	$56.00	$60.75	$75.67	$89.73	$67.83	$81.08	$100.10	$78.61	$73.82	$87.45	$77.33	$74.67	$65.27	$76.95	$78.93	$64.60	$67.36
16	$58.43	$62.61	$78.28	$93.65	$69.78	$84.36	$104.90	$81.89	$76.86	$91.39	$80.13	$77.28	$67.12	$79.75	$82.34	$66.36	$69.40
17	$60.85	$64.46	$80.89	$97.57	$71.73	$87.64	$109.70	$85.17	$79.90	$95.33	$82.94	$79.90	$68.97	$82.56	$85.74	$68.12	$71.44
18	$63.27	$66.31	$83.51	$101.49	$73.67	$90.92	$114.51	$88.45	$82.94	$99.28	$85.74	$82.51	$70.82	$85.36	$89.15	$69.87	$73.48
19	$65.69	$68.16	$86.12	$105.41	$75.62	$94.19	$119.31	$91.72	$85.98	$103.22	$88.54	$85.12	$72.68	$88.16	$92.56	$71.63	$75.53
20	$68.12	$70.02	$88.73	$109.33	$77.57	$97.47	$124.11	$95.00	$89.03	$107.16	$91.34	$87.73	$74.53	$90.96	$95.96	$73.39	$77.57
21	$70.54	$71.87	$91.34	$113.25	$79.52	$100.75	$128.91	$98.28	$92.07	$111.10	$94.15	$90.35	$76.38	$93.77	$99.37	$75.15	$79.61
22	$72.96	$73.72	$93.96	$117.17	$81.46	$104.03	$133.71	$101.56	$95.11	$115.05	$96.95	$92.96	$78.23	$96.57	$102.77	$76.90	$81.65
23	$75.38	$75.57	$96.57	$121.09	$83.41	$107.30	$138.51	$104.83	$98.15	$118.99	$99.75	$95.57	$80.09	$99.37	$106.18	$78.66	$83.70
24	$77.80	$77.43	$99.18	$125.00	$85.36	$110.58	$143.31	$108.11	$101.19	$122.93	$102.55	$98.18	$81.94	$102.17	$109.59	$80.42	$85.74
25	$80.23	$79.28	$101.79	$128.92	$87.31	$113.86	$148.11	$111.39	$104.24	$126.87	$105.36	$100.80	$83.79	$104.98	$112.99	$82.17	$87.78
26	$82.65	$81.13	$104.41	$132.84	$89.25	$117.14	$152.92	$114.67	$107.28	$130.82	$108.16	$103.41	$85.64	$107.78	$116.40	$83.93	$89.82
27	$85.07	$82.98	$107.02	$136.76	$91.20	$120.41	$157.72	$117.94	$110.32	$134.76	$110.96	$106.02	$87.50	$110.58	$119.80	$85.69	$91.87
28	$87.49	$84.84	$109.63	$140.68	$93.15	$123.69	$162.52	$121.22	$113.36	$138.70	$113.76	$108.63	$89.35	$113.38	$123.21	$87.45	$93.91
29	$89.92	$86.69	$112.24	$144.60	$95.10	$126.97	$167.32	$124.50	$116.40	$142.64	$116.57	$111.25	$91.20	$116.19	$126.62	$89.20	$95.95
30	$92.34	$88.54	$114.86	$148.52	$97.04	$130.25	$172.12	$127.78	$119.44	$146.59	$119.37	$113.86	$93.05	$118.99	$130.02	$90.96	$97.99
31	$94.76	$90.39	$117.47	$152.44	$98.99	$133.52	$176.92	$131.05	$122.49	$150.53	$122.17	$116.47	$94.91	$121.79	$133.43	$92.72	$100.04
32	$97.19	$92.25	$120.08	$156.36	$100.94	$136.80	$181.72	$134.33	$125.53	$154.47	$124.97	$119.08	$96.76	$124.59	$136.83	$94.48	$102.08
33	$99.61	$94.10	$122.69	$160.28	$102.89	$140.08	$186.52	$137.61	$128.57	$158.41	$127.78	$121.70	$98.61	$127.40	$140.24	$96.24	$104.12
34	$102.03	$95.95	$125.31	$164.19	$104.83	$143.36	$191.32	$140.89	$131.61	$162.36	$130.58	$124.31	$100.46	$130.20	$143.65	$97.99	$106.16
35	$104.45	$97.80	$127.92	$168.11	$106.78	$146.63	$196.13	$144.16	$134.65	$166.30	$133.38	$126.92	$102.32	$133.00	$147.05	$99.75	$108.21

36	$106.88	$99.66	$130.53	$172.03	$108.73	$149.91	$200.93	$147.44	$137.70	$170.24	$136.18	$129.53	$104.17	$135.80	$150.46	$101.51	$110.25
37	$109.30	$101.51	$133.14	$175.95	$110.68	$153.19	$205.73	$150.72	$140.74	$174.18	$138.99	$132.15	$106.02	$138.61	$153.86	$103.27	$112.29
38	$111.72	$103.36	$135.76	$179.87	$112.62	$156.47	$210.53	$154.00	$143.78	$178.13	$141.79	$134.76	$107.87	$141.41	$157.27	$105.02	$114.33
39	$114.14	$105.21	$138.37	$183.79	$114.57	$159.74	$215.33	$157.27	$146.82	$182.07	$144.59	$137.37	$109.73	$144.21	$160.68	$106.78	$116.38
40	$116.57	$107.07	$140.98	$187.71	$116.52	$163.02	$220.13	$160.55	$149.86	$186.01	$147.39	$139.98	$111.58	$147.01	$164.08	$108.54	$118.42
41	$118.99	$108.92	$143.59	$191.63	$118.47	$166.30	$224.93	$163.83	$152.90	$189.95	$150.20	$142.60	$113.43	$149.82	$167.49	$110.30	$120.46
42	$121.41	$110.95	$146.21	$195.55	$120.41	$169.58	$229.73	$167.11	$155.95	$193.90	$153.00	$145.21	$115.28	$152.62	$170.89	$112.05	$122.50
43	$123.83	$113.00	$148.82	$199.46	$122.36	$172.85	$234.54	$170.38	$158.99	$197.84	$155.80	$147.82	$117.14	$155.42	$174.30	$113.81	$124.55
44	$126.26	$115.04	$151.43	$203.38	$124.31	$176.13	$239.34	$173.66	$162.03	$201.78	$158.60	$150.43	$118.99	$158.22	$177.71	$115.57	$126.59
45	$128.68	n/a	$154.04	$207.30	$126.26	$179.41	$244.14	$176.94	$165.07	$205.72	$161.41	$153.05	$120.84	$161.03	$181.11	$117.33	n/a
46	$131.10	n/a	$156.66	$211.22	$128.20	$182.69	$248.94	$180.22	$168.11	$209.67	$164.21	$155.66	$122.69	$163.83	$184.52	$119.08	n/a
47	$133.52	n/a	$159.27	$215.14	$130.15	$185.96	$253.74	$183.49	$171.16	$213.61	$167.01	$158.27	$124.55	$166.63	$187.92	$120.84	n/a
48	$135.95	n/a	$161.88	$219.06	$132.10	$189.24	$258.54	$186.77	$174.15	$217.55	$169.81	$160.88	$126.40	$169.43	$191.33	$122.60	n/a
49	$138.37	n/a	$164.49	$222.98	$134.05	$192.52	$263.34	$190.05	$177.10	$221.49	$172.62	$163.50	$128.25	$172.24	$194.74	$124.36	n/a
50	$140.79	n/a	$167.11	$226.90	$135.99	$195.80	$268.14	$193.33	$180.05	$225.44	$175.42	$166.11	$130.10	$175.04	$198.14	$126.11	n/a
51	$143.21	n/a	$169.72	$230.82	$137.94	$199.07	$272.95	$196.60	$183.00	$229.38	$178.22	$168.72	$131.96	$177.84	$201.55	$127.87	n/a
52	$145.64	n/a	$172.33	$234.73	$139.89	$202.35	$277.75	$199.88	$185.95	$233.32	$181.02	$171.33	$133.81	$180.64	$204.95	$129.63	n/a
53	$148.06	n/a	$174.94	$238.65	$141.84	$205.63	$282.55	$203.16	$188.90	$237.26	$183.83	$173.95	$135.66	$183.45	$208.36	$131.39	n/a
54	$150.48	n/a	$177.56	$242.57	$143.78	$208.91	$287.35	$206.44	$191.85	$241.21	$186.63	$176.56	$137.51	$186.25	$211.77	$133.14	n/a
55	$152.90	n/a	$180.17	$246.49	$145.73	$212.18	$292.15	$209.71	$194.80	$245.15	$189.43	$179.17	$139.37	$189.05	$215.17	$134.90	n/a
56	$155.33	n/a	$182.78	$250.41	$147.68	$215.46	$296.95	$212.99	$197.75	$249.09	$192.23	$181.78	$141.22	$191.85	$218.58	$136.66	n/a
57	$157.75	n/a	$185.39	$254.33	$149.63	$218.74	$301.75	$216.27	$200.70	$253.03	$195.04	$184.40	$143.07	$194.66	$221.98	$138.42	n/a
58	$160.17	n/a	$188.01	$258.25	$151.57	$222.02	$306.55	$219.55	$203.65	$256.98	$197.84	$187.01	$144.92	$197.46	$225.39	$140.17	n/a
59	$162.59	n/a	$190.62	$262.17	$153.52	$225.29	$311.36	$222.82	$206.60	$260.92	$200.64	$189.62	$146.78	$200.26	$228.80	$141.93	n/a
60	$165.02	n/a	$193.23	$266.09	$155.47	$228.57	$316.16	$226.10	$209.55	$264.86	$203.44	$192.23	$148.63	$203.06	$232.20	$143.69	n/a
61	$167.44	n/a	$195.84	$270.00	$157.42	$231.85	$320.96	$229.38	$212.50	$268.80	$206.25	$194.85	$150.48	$205.87	$235.61	$145.45	n/a
62	$169.86	n/a	$198.46	$273.92	$159.36	$235.13	$325.76	$232.66	$215.45	$272.75	$209.05	$197.46	$152.33	$208.67	$239.01	$147.20	n/a
63	$172.28	n/a	$201.07	$277.84	$161.31	$238.40	$330.56	$235.93	$218.40	$276.69	$211.85	$200.07	$154.19	$211.47	$242.42	$148.96	n/a
64	$174.71	n/a	$203.68	$281.76	$163.26	$241.68	$335.36	$239.21	$221.35	$280.63	$214.65	$202.68	$156.04	$214.27	$245.83	$150.72	n/a
65	$177.13	n/a	$206.29	$285.68	$165.21	$244.96	$340.16	$242.49	$224.30	$284.57	$217.46	$205.30	$157.89	$217.08	$249.23	$152.48	n/a
66	$179.55	n/a	$208.91	$289.60	$167.15	$248.24	$344.96	$245.77	$227.25	$288.52	$220.26	$207.91	$159.74	$219.88	$252.64	$154.23	n/a
67	n/a	n/a	$211.52	$293.52	$169.10	$251.51	$349.77	$249.04	$230.20	n/a	n/a	n/a	n/a	n/a	n/a	$155.99	n/a
68	n/a	n/a	$214.13	$297.44	$171.05	$254.79	$354.57	$252.32	$233.15	n/a	n/a	n/a	n/a	n/a	n/a	$157.75	n/a
69	n/a	n/a	$216.74	$301.36	$173.00	$258.07	$359.37	$255.60	$236.10	n/a	n/a	n/a	n/a	n/a	n/a	$159.51	n/a
70	n/a	n/a	$219.36	$305.27	$174.94	$261.35	$364.17	$258.88	$239.05	n/a	n/a	n/a	n/a	n/a	n/a	$161.26	n/a

Priority Mail International Commercial Plus Prices

Weight Not Over (lb)	Group 1	Group 2	Group 3	Group 4	Group 5	Group 6	Group 7	Group 8	Group 9	Group 10	Group 11	Group 12	Group 13	Group 14	Group 15	Group 16	Group 17
1	$20.93	$25.43	$31.28	$32.03	$31.50	$30.83	$31.28	$28.58	$28.48	$30.56	$33.37	$31.05	$29.11	$31.05	$28.58	$27.54	$27.30
2	$23.22	$28.62	$35.19	$35.84	$34.97	$34.11	$35.55	$32.40	$31.91	$34.29	$36.77	$34.79	$31.10	$34.88	$32.13	$30.83	$30.92
3	$25.52	$31.82	$39.11	$39.69	$38.43	$37.40	$39.83	$36.23	$35.46	$38.03	$40.23	$38.52	$35.19	$38.70	$35.69	$34.65	$34.83
4	$27.81	$35.01	$43.02	$43.79	$41.90	$40.68	$44.12	$40.05	$39.02	$41.76	$43.70	$42.26	$39.29	$42.53	$39.24	$38.48	$38.75
5	$30.11	$38.21	$46.94	$47.88	$45.36	$43.97	$48.80	$43.88	$42.57	$45.50	$47.16	$45.99	$43.38	$46.35	$42.80	$42.30	$42.66
6	$32.40	$40.32	$49.41	$51.44	$47.30	$47.43	$53.47	$46.89	$45.23	$49.23	$49.73	$48.47	$45.32	$49.01	$45.45	$44.42	$44.96
7	$34.70	$42.44	$51.89	$54.99	$49.23	$50.90	$58.15	$49.91	$47.88	$52.97	$52.29	$50.94	$47.25	$51.66	$48.40	$46.53	$47.25
8	$36.99	$44.55	$54.36	$58.74	$51.17	$54.36	$62.82	$52.92	$50.54	$56.70	$54.86	$53.42	$49.19	$54.32	$51.72	$48.65	$49.55
9	$39.29	$46.67	$56.84	$62.56	$53.10	$57.83	$67.50	$55.94	$53.19	$60.44	$57.42	$55.89	$51.12	$56.97	$55.04	$50.76	$51.84
10	$41.58	$48.78	$59.31	$66.38	$55.04	$61.29	$72.18	$58.95	$55.85	$64.17	$59.99	$58.37	$53.06	$59.63	$58.35	$52.88	$54.14
11	$43.88	$50.54	$61.79	$70.19	$56.88	$64.40	$76.85	$62.06	$58.50	$67.91	$62.64	$60.84	$54.81	$62.28	$61.67	$54.54	$56.07
12	$46.17	$52.29	$64.26	$74.01	$58.73	$67.50	$81.53	$65.16	$61.16	$71.64	$65.30	$63.32	$56.57	$64.94	$64.99	$56.21	$58.01
13	$48.47	$54.05	$66.74	$77.83	$60.57	$70.61	$86.20	$68.27	$64.03	$75.38	$67.95	$65.79	$58.32	$67.59	$68.30	$57.87	$59.94
14	$50.76	$55.80	$69.21	$81.64	$62.42	$73.71	$90.88	$71.37	$66.99	$79.11	$70.61	$68.27	$60.08	$70.25	$71.62	$59.54	$61.88
15	$53.06	$57.56	$71.69	$85.46	$64.26	$76.82	$95.56	$74.48	$69.96	$82.85	$73.26	$70.74	$61.83	$72.90	$74.94	$61.20	$63.81
16	$55.35	$59.31	$74.16	$89.28	$66.11	$79.92	$100.23	$77.58	$72.92	$86.58	$75.92	$73.22	$63.59	$75.56	$78.26	$62.87	$65.75
17	$57.65	$61.07	$76.64	$93.09	$67.95	$83.03	$104.91	$80.69	$75.88	$90.32	$78.57	$75.69	$65.34	$78.21	$81.57	$64.53	$67.68
18	$59.94	$62.82	$79.11	$96.91	$69.80	$86.13	$109.58	$83.79	$78.84	$94.05	$81.23	$78.17	$67.10	$80.87	$84.89	$66.20	$69.62
19	$62.24	$64.58	$81.59	$100.73	$71.64	$89.24	$114.26	$86.90	$81.81	$97.79	$83.88	$80.64	$68.85	$83.52	$88.21	$67.86	$71.55
20	$64.53	$66.33	$84.06	$104.54	$73.49	$92.34	$118.94	$90.00	$84.77	$101.52	$86.54	$83.12	$70.61	$86.18	$91.52	$69.53	$73.49
21	$66.83	$68.09	$86.54	$108.36	$75.33	$95.45	$123.61	$93.11	$87.73	$105.26	$89.19	$85.59	$72.36	$88.83	$94.84	$71.19	$75.42
22	$69.12	$69.84	$89.01	$112.18	$77.18	$98.55	$128.29	$96.21	$90.69	$108.99	$91.85	$88.07	$74.12	$91.49	$98.16	$72.86	$77.36
23	$71.42	$71.60	$91.49	$115.99	$79.02	$101.66	$132.96	$99.32	$93.66	$112.73	$94.50	$90.54	$75.87	$94.14	$101.48	$74.52	$79.29
24	$73.71	$73.35	$93.96	$119.81	$80.87	$104.76	$137.64	$102.42	$96.62	$116.46	$97.16	$93.02	$77.63	$96.80	$104.79	$76.19	$81.23
25	$76.01	$75.11	$96.44	$123.63	$82.71	$107.87	$142.31	$105.53	$99.58	$120.20	$99.81	$95.49	$79.38	$99.45	$108.11	$77.85	$83.16
26	$78.30	$76.86	$98.91	$127.44	$84.56	$110.97	$146.99	$108.63	$102.54	$123.93	$102.47	$97.97	$81.14	$102.11	$111.43	$79.51	$85.10
27	$80.59	$78.62	$101.39	$131.26	$86.40	$114.08	$151.67	$111.74	$105.51	$127.67	$105.12	$100.44	$82.89	$104.76	$114.74	$81.18	$87.03
28	$82.89	$80.37	$103.86	$135.08	$88.25	$117.18	$156.34	$114.84	$108.47	$131.40	$107.78	$102.92	$84.65	$107.42	$118.06	$82.84	$88.97
29	$85.18	$82.13	$106.34	$138.89	$90.09	$120.29	$161.02	$117.95	$111.43	$135.14	$110.43	$105.39	$86.40	$110.07	$121.38	$84.51	$90.90
30	$87.48	$83.88	$108.81	$142.71	$91.94	$123.39	$165.69	$121.05	$114.39	$138.87	$113.09	$107.87	$88.16	$112.73	$124.70	$86.17	$92.84
31	$89.77	$85.64	$111.29	$146.53	$93.78	$126.50	$170.37	$124.16	$117.36	$142.61	$115.74	$110.34	$89.91	$115.38	$128.01	$87.84	$94.77
32	$92.07	$87.39	$113.76	$150.34	$95.63	$129.60	$175.05	$127.26	$120.32	$146.34	$118.40	$112.82	$91.67	$118.04	$131.33	$89.50	$96.71
33	$94.37	$89.15	$116.24	$154.16	$97.47	$132.71	$179.72	$130.37	$123.28	$150.08	$121.05	$115.29	$93.42	$120.69	$134.65	$91.17	$98.64
34	$96.66	$90.90	$118.71	$157.98	$99.32	$135.81	$184.40	$133.47	$126.24	$153.81	$123.71	$117.77	$95.18	$123.35	$137.96	$92.84	$100.58
35	$98.96	$92.66	$121.19	$161.79	$101.16	$138.92	$189.07	$136.58	$129.21	$157.55	$126.36	$120.24	$96.93	$126.00	$141.28	$94.50	$102.51
36	$101.25	$94.41	$123.66	$165.61	$103.01	$142.02	$193.75	$139.68	$132.17	$161.28	$129.02	$122.72	$98.69	$128.66	$144.60	$96.17	$104.45
37	$103.55	$96.17	$126.14	$169.43	$104.85	$145.13	$198.43	$142.79	$135.13	$165.02	$131.73	$125.19	$100.44	$131.31	$147.92	$97.83	$106.38

38	$105.84	$98.16	$128.61	$173.24	$106.70	$148.23	$203.10	$145.89	$138.09	$168.75	$134.46	$127.67	$102.20	$133.97	$151.23	$99.50	$108.32
39	$108.14	$100.15	$131.09	$177.06	$108.54	$151.34	$207.78	$149.00	$141.06	$172.49	$137.19	$130.14	$103.95	$136.62	$154.55	$101.16	$110.25
40	$110.43	$102.14	$133.56	$180.88	$110.39	$154.44	$212.45	$152.10	$144.02	$176.22	$139.92	$132.62	$105.71	$139.28	$157.87	$102.83	$112.19
41	$112.73	$104.13	$136.04	$184.69	$112.23	$157.55	$217.13	$155.21	$146.98	$179.96	$142.66	$135.09	$107.46	$141.93	$161.18	$104.49	$114.12
42	$115.02	$106.12	$138.51	$188.51	$114.08	$160.65	$221.81	$158.31	$149.94	$183.69	$145.39	$137.57	$109.22	$144.59	$164.50	$106.16	$116.06
43	$117.32	$108.12	$140.99	$192.33	$115.92	$163.76	$226.48	$161.42	$152.91	$187.43	$148.12	$140.04	$110.97	$147.24	$167.82	$107.82	$117.99
44	$119.61	$110.11	$143.46	$196.14	$117.77	$166.86	$231.16	$164.52	$155.87	$191.16	$150.85	$142.52	$112.73	$149.90	$171.14	$109.49	$119.93
45	$121.91	n/a	$145.94	$199.96	$119.61	$169.97	$235.83	$167.63	$158.83	$194.90	$153.58	$144.99	$114.48	$152.55	$174.45	$111.15	n/a
46	$124.20	n/a	$148.41	$203.78	$121.46	$173.07	$240.51	$170.73	$161.79	$198.63	$156.32	$147.47	$116.24	$155.21	$177.77	$112.82	n/a
47	$126.50	n/a	$150.89	$207.59	$123.30	$176.18	$245.19	$173.84	$164.76	$202.37	$159.05	$149.94	$117.99	$157.86	$181.09	$114.48	n/a
48	$128.79	n/a	$153.36	$211.41	$125.15	$179.28	$249.86	$176.94	$167.72	$206.10	$161.78	$152.42	$119.75	$160.52	$184.40	$116.15	n/a
49	$131.09	n/a	$155.84	$215.23	$126.99	$182.39	$254.54	$180.05	$170.68	$209.84	$164.51	$154.89	$121.50	$163.17	$187.72	$117.81	n/a
50	$133.38	n/a	$158.31	$219.04	$128.84	$185.49	$259.21	$183.15	$173.64	$213.57	$167.25	$157.37	$123.26	$165.83	$191.04	$119.48	n/a
51	$135.68	n/a	$160.79	$222.86	$130.68	$188.60	$263.89	$186.26	$176.61	$217.31	$169.98	$159.84	$125.01	$168.48	$194.35	$121.14	n/a
52	$137.97	n/a	$163.26	$226.68	$132.53	$191.70	$268.57	$189.36	$179.57	$221.04	$172.71	$162.32	$126.77	$171.14	$197.67	$122.81	n/a
53	$140.27	n/a	$165.74	$230.49	$134.37	$194.81	$273.24	$192.47	$182.53	$224.78	$175.44	$164.79	$128.52	$173.79	$200.99	$124.47	n/a
54	$142.56	n/a	$168.21	$234.31	$136.22	$197.91	$277.92	$195.57	$185.49	$228.51	$178.17	$167.27	$130.28	$176.45	$204.31	$126.14	n/a
55	$144.86	n/a	$170.69	$238.13	$138.06	$201.02	$282.59	$198.68	$188.45	$232.25	$180.91	$169.74	$132.03	$179.10	$207.62	$127.80	n/a
56	$147.15	n/a	$173.16	$241.94	$139.91	$204.12	$287.27	$201.78	$191.42	$235.98	$183.64	$172.22	$133.79	$181.76	$210.94	$129.47	n/a
57	$149.45	n/a	$175.64	$245.76	$141.75	$207.23	$291.95	$204.89	$194.38	$239.72	$186.37	$174.69	$135.54	$184.41	$214.26	$131.13	n/a
58	$151.74	n/a	$178.11	$249.58	$143.60	$210.33	$296.62	$207.99	$197.34	$243.45	$189.10	$177.17	$137.30	$187.07	$217.57	$132.80	n/a
59	$154.04	n/a	$180.59	$253.39	$145.44	$213.44	$301.30	$211.10	$200.30	$247.19	$191.84	$179.64	$139.05	$189.72	$220.89	$134.46	n/a
60	$156.33	n/a	$183.06	$257.21	$147.29	$216.54	$305.97	$214.20	$203.27	$250.92	$194.57	$182.12	$140.81	$192.38	$224.21	$136.13	n/a
61	$158.63	n/a	$185.54	$261.03	$149.13	$219.65	$310.65	$217.31	$206.23	$254.66	$197.30	$184.59	$142.56	$195.03	$227.53	$137.79	n/a
62	$160.92	n/a	$188.01	$264.84	$150.98	$222.75	$315.33	$220.41	$209.19	$258.39	$200.03	$187.07	$144.32	$197.69	$230.84	$139.46	n/a
63	$163.22	n/a	$190.49	$268.66	$152.82	$225.86	$320.00	$223.52	$212.15	$262.13	$202.76	$189.54	$146.07	$200.34	$234.16	$141.12	n/a
64	$165.51	n/a	$192.96	$272.48	$154.67	$228.96	$324.68	$226.62	$215.12	$265.86	$205.50	$192.02	$147.83	$203.00	$237.48	$142.79	n/a
65	$167.81	n/a	$195.44	$276.29	$156.51	$232.07	$329.35	$229.73	$218.08	$269.60	$208.23	$194.49	$149.58	$205.65	$240.79	$144.45	n/a
66	$170.10	n/a	$197.91	$280.11	$158.36	$235.17	$334.03	$232.83	$221.04	$273.33	$210.96	$196.97	$151.34	$208.31	$244.11	$146.12	n/a
67	n/a	n/a	$200.39	$283.93	$160.20	$238.28	$338.71	$235.94	$224.00	n/a	n/a	n/a	n/a	n/a	n/a	$147.78	n/a
68	n/a	n/a	$202.86	$287.74	$162.05	$241.38	$343.38	$239.04	$226.97	n/a	n/a	n/a	n/a	n/a	n/a	$149.45	n/a
69	n/a	n/a	$205.34	$291.56	$163.89	$244.49	$348.06	$242.15	$229.93	n/a	n/a	n/a	n/a	n/a	n/a	$151.11	n/a
70	n/a	n/a	$207.81	$295.38	$165.74	$247.59	$352.73	$245.25	$232.89	n/a	n/a	n/a	n/a	n/a	n/a	$152.78	n/a

Pickup On Demand Service

Add price specified for Parcel Post Pickup On Demand service (section 1405.6) for each Pickup On Demand stop.

Online Incentives

~~A discount of 5 percent will be applied to Priority Mail International prices to selected destination countries.~~

Permit Imprint Incentives

~~A discount of 5 percent will be applied to Priority Mail International prices for customers who use approved software for mail preparation and Customs-related functions.~~

2320 International Priority Airmail (IPA)

* * * * *

2320.6 Prices

International Priority Airmail

The price is determined by adding the applicable per-piece price to the applicable per-pound price. The per-piece price applies to each mailpiece regardless of weight. The per-pound price applies to the net weight (gross weight of the sack minus the tare weight of the sack *or tray*) of the mail for the specific Country Price Group.

a. Presort Mail (Full Service and ISC Drop Shipment)

i. Per Piece

	Price group							
	1 ($)	2 ($)	3 ($)	4 ($)	5 ($)	6 ($)	7 ($)	8 ($)
Direct Country Sacks	*0.51*	*0.16*	*0.52*	*0.53*	*0.52*	*0.52*	*0.53*	*0.51*
	9 ($)	10 ($)	11 ($)	12 ($)	13 ($)	14 ($)	15 ($)	
Direct Country Sacks	*0.42*	*0.47*	*0.48*	*0.18*	*0.18*	*0.18*	*0.14*	.....
Mixed Country Sacks	.....	.....	*0.51*	*0.19*	*0.19*	*0.19*	*0.16*	.....

ii. Per Pound

	Price group							
	1 ($)	2 ($)	3 ($)	4 ($)	5 ($)	6 ($)	7 ($)	8 ($)
Direct Country Sacks (Full Service)	*6.03*	*7.37*	*7.58*	*7.92*	*7.72*	*7.66*	*7.65*	*7.52*
Direct Country Sacks (ISC Drop Shipment)	*4.09*	*4.62*	*5.63*	*5.96*	*5.78*	*5.71*	*5.72*	*5.58*
	9 ($)	10 ($)	11 ($)	12 ($)	13 ($)	14 ($)	15 ($)	
Direct Country Sacks (Full Service)	*8.37*	*7.80*	*8.03*	*7.63*	*8.48*	*8.15*	*9.14*	.....
Direct Country Sacks (ISC Drop Shipment)	*6.27*	*5.85*	*5.80*	*5.69*	*5.60*	*6.21*	*7.20*	.....
Mixed Country Sacks (ISC Drop Shipment)	.....	.....	*6.10*	*5.98*	*5.89*	*6.53*	*7.56*	.....

b. Worldwide Nonpresort Mail (Full Service and ISC Drop Shipment)

i. Per Piece

	($)
Worldwide Nonpresorted Sacks	*0.57*

ii. Per Pound

	($)
Worldwide Nonpresorted Sacks (Full Service)	*10.56*
Worldwide Nonpresorted Sacks (ISC Drop Shipment)	*8.32*

International Priority Airmail M–Bag

The price is based on the applicable per-pound price. The per-pound price applies to the net weight (gross weight of the sack minus the tare weight of the sack) of the mail for the specific Country Price Group.

a. International Priority Airmail M-Bag (Full Service)

Each M-Bag Subject to a Minimum 11 Pound Price ~~Maximum Weight (pounds)~~	**Price Group**							
	1 ($)	**2 ($)**	**3 ($)**	**4 ($)**	**5 ($)**	**6 ($)**	**7 ($)**	**8 ($)**
Weight Not Over 11 Pounds	50.60	57.20	67.10	67.10	67.10	67.10	67.10	67.10
For each additional pound or fraction thereof	4.60	5.20	6.10	6.10	6.10	6.10	6.10	6.10

Each M-Bag Subject to a Minimum 11 Pound Price ~~Maximum Weight (pounds)~~	**Price Group**						
	9 ($)	**10 ($)**	**11 ($)**	**12 ($)**	**13 ($)**	**14 ($)**	**15 ($)**
Weight Not Over 11 Pounds	89.10	84.15	67.10	75.90	73.70	81.95	80.85
For each additional pound or fraction thereof	8.10	7.65	6.10	6.90	6.70	7.45	7.35

b. International Priority Airmail M-Bag (ISC Drop Shipment)

Each M-Bag Subject to a Minimum 5 Pound Price ~~Maximum Weight (pounds)~~	Price Group							
	1 ($)	2 ($)	3 ($)	4 ($)	5 ($)	6 ($)	7 ($)	8 ($)
Weight not over (pounds) 5	19.30	25.00	30.85	30.85	30.85	30.85	30.85	30.85
6	19.75	25.60	31.85	31.85	31.85	31.85	31.85	31.85
7	20.20	26.20	32.85	32.85	32.85	32.85	32.85	32.85
8	20.65	26.80	33.85	33.85	33.85	33.85	33.85	33.85
9	21.10	27.40	34.85	34.85	34.85	34.85	34.85	34.85
10	21.55	28.00	35.85	35.85	35.85	35.85	35.85	35.85
11	22.00	28.60	36.85	36.85	36.85	36.85	36.85	36.85
For each additional pound or fraction thereof	2.00	2.60	3.35	3.35	3.35	3.35	3.35	3.35

Each M-Bag Subject to a Minimum Price for 5 Pounds ~~Maximum Weight (pounds)~~	Price Group						
	9 ($)	10 ($)	11 ($)	12 ($)	13 ($)	14 ($)	15 ($)
Weight not over (pounds) 5	47.75	44.50	30.85	38.75	38.65	44.80	42.50
6	49.60	46.25	31.85	39.90	39.45	45.95	43.85

7	51.45	48.00	32.85	41.05	40.25	47.10	45.20
8	53.30	49.75	33.85	42.20	41.05	48.25	46.55
9	55.15	51.50	34.85	43.35	41.85	49.40	47.90
10	57.00	53.25	35.85	44.50	42.65	50.55	49.25
11	58.85	55.00	36.85	45.65	43.45	51.70	50.60
For each additional pound or fraction thereof	5.35	5.00	3.35	4.15	3.95	4.70	4.60

2325 International Surface Air Lift (ISAL)

* * * * *

2325.6 Prices

International Surface Air Lift (Full Service and ISC Drop Shipment)

The price is determined by adding the applicable per-piece price to the applicable per-pound price. The per-piece price applies to each mailpiece regardless of weight. The per-pound price applies to the net weight (gross weight of the sack minus the tare weight of the sack) of the mail for the specific price group.

i. Per Piece

	Price group							
	1 ($)	2 ($)	3 ($)	4 ($)	5 ($)	6 ($)	7 ($)	8 ($)
Direct Country Sacks	*0.45*	*0.14*	0.46	*0.47*	0.46	*0.46*	0.46	0.45
		9 ($)	10 ($)	11 ($)	12 ($)	13 ($)	14 ($)	15 ($)
Direct Country Sacks		*0.37*	*0.41*	*0.43*	0.16	0.16	0.16	0.13
Mixed Country Sacks		—	—	*0.45*	0.17	0.17	0.17	0.14

ii. Per Pound

	Price group							
	1 ($)	2 ($)	3 ($)	4 ($)	5 ($)	6 ($)	7 ($)	8 ($)
Direct Country Sacks (Full Service)	*5.31*	*6.49*	*6.67*	*6.97*	*6.79*	*6.74*	*6.74*	*6.62*
Direct Country Sacks (ISC Drop Shipment)	*3.60*	*4.07*	*4.96*	*5.25*	*5.08*	*5.03*	*5.03*	*4.91*
		9 ($)	10 ($)	11 ($)	12 ($)	13 ($)	14 ($)	15 ($)
Direct Country Sacks (Full Service)		*7.37*	*6.87*	*7.06*	*6.71*	*7.47*	*7.17*	*8.04*
Direct Country Sacks (ISC Drop Shipment)		*5.52*	*5.15*	*5.11*	*5.00*	*4.93*	*5.47*	*6.33*
Mixed Country Sacks (ISC Drop Shipment)		—	—	*5.36*	*5.26*	*5.18*	*5.75*	*6.65*

b. Worldwide Nonpresort Mail (Full Service and ISC Drop Shipment)

i. Per Piece

	($)
Worldwide Nonpresorted Sacks	*0.50*

ii. Per Pound

	($)
Worldwide Nonpresorted Sacks (Full Service)	*9.30*
Worldwide Nonpresorted Sacks (ISC Drop Shipment)	*7.32*

International Surface Air Lift M-Bags

The price is based on the applicable per-pound price. The per-pound price applies to the net weight (gross weight of the sack minus the tare weight of the sack) of the mail for the specific price group.

a. International Surface Air Lift M-Bags (Full Service)

Each M-Bag Subject to a Minimum 11 Pound Price ~~Maximum Weight (pounds)~~		2 ($)	3 ($)	4 ($)	5 ($)	6 ($)	7 ($)	8 ($)
Weight Not Over 11 Pounds	17.60	18.70	22.00	22.00	22.00	22.00	22.00	22.00
For each additional pound or fraction thereof	1.60	1.70	2.00	2.00	2.00	2.00	2.00	2.00

Each M-Bag Subject to a Minimum 11 Pound Price ~~Maximum Weight (pounds)~~	Price Group						
	9 ($)	10 ($)	11 ($)	12 ($)	13 ($)	14 ($)	15 ($)
Weight Not Over 11 Pounds	33.00	30.80	22.33	25.85	25.85	28.60	35.75
For each additional pound or fraction	3.00	2.80	2.03	2.35	2.35	2.60	3.25

thereof							

b. International Surface Air Lift M-Bag ISC (ISC Drop Shipment)

Each M-Bag Subject to a Minimum 5 Pound Price ~~Maximum Weight (pounds)~~	**Price Group**							
	1 ($)	**2 ($)**	**3 ($)**	**4 ($)**	**5 ($)**	**6 ($)**	**7 ($)**	**8 ($)**
Weight not over (pounds) 5	15.90	14.30	11.45	11.45	11.45	11.45	11.45	11.45
6	16.00	14.85	12.75	12.75	12.75	12.75	12.75	12.75
7	16.10	15.40	14.05	14.05	14.05	14.05	14.05	14.05
8	16.20	15.95	15.35	15.35	15.35	15.35	15.35	15.35
9	16.30	16.50	16.65	16.65	16.65	16.65	16.65	16.65
10	16.40	17.05	17.95	17.95	17.95	17.95	17.95	17.95
11	16.50	17.60	19.25	19.25	19.25	19.25	19.25	19.25
For each additional pound or fraction thereof	1.50	1.60	1.75	1.75	1.75	1.75	1.75	1.75

Each M-Bag Subject to a Minimum 5 Pound Price ~~Maximum Weight (pounds)~~	**Price Group**						
	9 ($)	**10 ($)**	**11 ($)**	**12 ($)**	**13 ($)**	**14 ($)**	**15 ($)**
Weight not over (pounds) 5	18.25	16.25	11.65	12.90	14.40	12.05	16.20
6	20.25	18.40	12.99	14.60	15.85	14.35	19.00

7	22.25	20.55	14.33	16.30	17.30	16.65	21.80
8	24.25	22.70	15.67	18.00	18.75	18.95	24.60
9	26.25	24.85	17.01	19.70	20.20	21.25	27.40
10	28.25	27.00	18.35	21.40	21.65	23.55	30.20
11	30.25	29.15	19.69	23.10	23.10	25.85	33.00
For each additional pound or fraction thereof	2.75	2.65	1.79	2.10	2.10	2.35	3.00

2330 International Direct Sacks—M-Bags

* * * * *

2330.6 Prices

Outbound International Direct Sacks—M-Bags

The price is based on the applicable per-pound price. The per-pound price applies to the net weight (gross weight of the sack minus the tare weight of the sack) of the mail for the specific price group.

Each M-Bag Subject to a Minimum 11 Pound Price ~~Maximum Weight (pounds)~~	Price Group[1]								
	1 ($)	2 ($)	3 ($)	4 ($)	5 ($)	6 ($)	7 ($)	8 ($)	9 ($)
Weight Not Over 11 Pounds	34.65	31.35	62.70	50.60	39.60	59.40	50.05	50.05	48.40
For each additional pound or fraction thereof	3.15	2.85	5.70	4.60	3.60	5.40	4.55	4.55	4.40

Notes

1. Same as Price Groups 1-9 for Single-Piece First-Class Mail International (SPFCMI).

2600 Special Services

* * * * *

2600.2 Products Included in Class

* * * * *

* * * * *

- Competitive Ancillary Services (2645)
  - Adult Signature Service (2645.1)
  - *Package Intercept Service (2645.2)*

* * * * *

* * * * *

2610 Greeting Cards and Stationery

* * * * *

2610.2 Prices [1]

	($)
Greeting Cards	0.99 to 25.00
Stationery	0.10 to 75.99

Notes:

[1] Minimum price applies to average price paid per item when multiple items are purchased together.

* * * * *

* * * * *

2615 International Ancillary Services

* * * * *

2615.1 International Certificate of Mailing

* * * * *

2615.1.2 Prices

Individual Pieces Prices

	($)
Original certificate of mailing for listed pieces of ordinary Priority Mail International parcels	1.15
Three or more pieces individually listed in a firm mailing book or an approved customer provided manifest (per piece)	*0.44*
Each additional copy of original certificate of mailing or firm mailing bills (each copy)	1.15

Multiple Pieces Prices

Identical pieces of ordinary Single-Piece First-Class Mail International paid with regular stamps, precanceled stamps, or meter stamps are subject to the following fees:

	($)
Up to 1,000 pieces (one certificate for total number)	*6.70*
Each additional 1,000 pieces or fraction	*0.80*
Duplicate copy	1.15

2615.2 Outbound Competitive International Registered Mail

* * * * *

2615.2.2 Prices

	($)
Per Piece	*11.75*

2615.3 International Return Receipt

* * * * *

2615.3.2 Prices

Outbound International Return Receipt

	($)
Per Piece	*2.35*

* * * * *

2615.4 International Restricted Delivery

* * * * *

2615.4.2 Prices

	($)
Per Piece	*4.55*

2615.5 International Insurance

* * * * *

2615.5.3 Prices

Outbound International Insurance

a. Priority Mail International Insurance

Indemnity limit not over ($)	Price ($)
50	*2.45*
100	*3.60*
200	*4.75*
300	*5.90*
400	*7.05*
500	*8.20*
600	*9.35*
700	*10.50*
Over 700	*10.50* plus *1.15* for each 100.00 or fraction thereof over 700.00. Maximum indemnity varies by country.

b. Express Mail International Merchandise Insurance

	($)		($)	($)
Amount of coverage:				
	0.01	to	100.00	0.00
	100.01	to	200.00	*0.85*
	200.01	to	500.00	*2.35*
	500.01	to	1,000.00	*3.85*
	1,000.01	to	1,500.00	*5.35*
	1,500.01	to	2,000.00	*6.85*
	2,000.01	to	2,500.00	*8.35*
	2,500.01	to	3,000.00	*9.85*
	3,000.01	to	3,500.00	*11.35*
	3,500.01	to	4,000.00	*12.85*
	4,000.01	to	4,500.00	*14.35*
	4,500.01	to	5,000.00	*15.85*

* * * * *

2615.6 Custom Clearance and Delivery Fee

* * * * *

2615.6.2 Prices

	($)
Per Dutiable Item	*5.50*

2620 International Money Transfer Service—Outbound

* * * * *

2620.3 Prices

International Money Order

	($)
Per International Money Order	*4.45*
Inquiry Fee	*5.50*

* * * * *

2630 Premium Forwarding Service

* * * * *

2630.2 Prices

	($)
Enrollment	15.00
Weekly Reshipment	15.25

2635 Shipping and Mailing Supplies

* * * * *

2635.2 Prices [1]

	($)
Mailers	0.39 to 25.00
Cartons	0.99 to 25.00
Supplies	0.49 to 14.65

Notes:
[1] Minimum price applies to average price paid per item when multiple items are purchased together.

2640 Post Office Box Service

2640.1 Description

* * *

2640.3 Prices

f. Competitive locations serve customers who are located within 5 miles of a current or recent competitive mailbox service provider. Some qualifying locations which substantially limit access by customers or have a small customer base will nonetheless be treated as market-dominant locations. ~~Competitive locations are the following ZIP Code locations, which are all within ½ mile of a competitive mailbox service provider, and from fee group 1, with one location selected from each 3-Digit ZIP Code for which more than one ZIP Code meets the criteria:~~

~~01730, 01844, 02081, 02112, 02447, 03835, 07002, 07306, 07410, 07624, 07711, 07922, 08812, 08904, 10021, 10308, 10536, 10920, 11104, 11216, 11361, 11423, 11702, 11937, 19102, 19407, 20001, 20726, 20918, 22101, 22206, 22301, 33427, 60615, 75371, 89009, 89116, 90013, 90266, 90408, 90603, 90609, 90734, 90803, 90853, 91322, 91404, 91407, 91408, 91609, 92514, 94070, 94507, 94701, 98109, 98114, and 99509.~~

* * *

~~2640.3~~ Prices

Regular – Semi-Annual Fees ($)[1, 2, 3]

	Fee Groups						
Box Size	~~**Semi-annual Fee group**~~ **C1**[4] ~~**($)**~~	**C2**	**C3**	**C4**	**C5**	**C6**	**C7**
1	37.00 to 180.00	30.00 to 150.00	25.00 to 120.00	21.00 to 90.00	19.00 to 80.00	14.00 to 55.00	12.00 to 50.00
2	55.00 to 270.00	46.00 to 225.00	38.00 to 185.00	32.00 to 135.00	25.00 to 105.00	20.00 to 85.00	16.00 to 70.00
3	100.00 to 330.00	80.00 to 275.00	70.00 to 235.00	50.00 to 150.00	45.00 to 130.00	34.00 to 100.00	27.00 to 80.00
4	205.00 to 400.00	160.00 to 300.00	128.00 to 250.00	100.00 to 175.00	80.00 to 150.00	60.00 to 110.00	45.00 to 90.00
5	325.00 to 650.00	275.00 to 500.00	215.00 to 375.00	185.00 to 275.00	140.00 to 210.00	105.00 to 155.00	80.00 to 125.00

Notes

1. At ZIP Code locations specified on usps.com, customers who have not had box service for the last six months may obtain an initial 13 months of service for twice the semi-annual fees provided above.

2. 3-month fees must fall within the range consisting of one-half the applicable minimum and one-half the applicable maximum in the above price table.
3. A portion of the fee may serve as postage on packages delivered to competitive Post Office box service customers after being brought to the Post Office by a private carrier.

Postal Facilities Primarily Serving Academic Institutions or Their Students

Period of box use (days)	Price
95 or less	½ semiannual price.
96 to 140	¾ semiannual price
141 to 190	Semiannual price.
191 to 230	1¼ semiannual price.
231 to 270	1½ semiannual price.
271 to full year	Two times semi-annual price.

Ancillary Post Office Box Services

	($)
Key duplication or replacement	(2)
Lock replacement	(2)
Key deposit [1]	(2)

NOTE: Notes

1 Key deposit only applies to additional keys or replacement keys.

2 Prices and deposit amount specified for market dominant Post Office Box service (section 1550.3) apply.

2645 Competitive Ancillary Services

* * * * *

2645.2 Package Intercept Service

2645.2.1 Description

a. *Package Intercept service allows a customer to request that the Postal Service intercept the customer's mail at the destination delivery unit based on the initial delivery address.*

b. *Intercepted packages can be: (1) Returned to sender; (2) held for pick up; or (3) redirected to an alternate domestic address. Intercepted packages will be shipped using Priority Mail.*

c. *Package Intercept service is available with First-Class Mail, Package Services, Express Mail, Priority Mail, and Parcel Select.*

2645.2.2 Prices

	($)
Package Intercept Service	*10.95*

Part D

Country Price Lists For International Mail

4000 Country Price Lists for International Mail

Country	Market dominant	Competitive			
		International expedited Services		International packages	IPA & ISAL [5]
	SPFCMI [1]	GXG [2]	EMI [3]	PMI [4]	
* * *	*	*		*	*
Tonga	6	*4*	*6*	6	14

* * * * *

Certification of Governors' Vote In the Governors' Decision No. 11–8

I hereby certify that the Governors voted on adopting Governors' Decision No. 11–8, and that, consistent with 39 U.S.C. 3632(a), a majority of the Governors then holding office concurred in the Decision.

Dated: October 18, 2011.

Julie S. Moore,

Secretary of the Board of Governors.

[FR Doc. 2011–30789 Filed 12–1–11; 8:45 am]

BILLING CODE 7710–12–P

FEDERAL REGISTER

Vol. 76 Friday,

No. 232 December 2, 2011

Part IV

Department of Transportation

Federal Aviation Administration

14 CFR Part 23

Certification of Part 23 Turbofan- and Turbojet-Powered Airplanes and Miscellaneous Amendments; Final Rule

DEPARTMENT OF TRANSPORTATION

Federal Aviation Administration

14 CFR Part 23

[Docket No. FAA–2009–0738; Amendment No. 23–62]

RIN 2120–AJ22

Certification of Part 23 Turbofan- and Turbojet-Powered Airplanes and Miscellaneous Amendments

AGENCY: Federal Aviation Administration (FAA), DOT.

ACTION: Final rule.

SUMMARY: This action enhances safety by amending the applicable standards for part 23 turbofan- and turbojet-powered airplanes—which are commonly referred to as ''part 23 jets,'' or ''jets''—as well as turbopropeller-driven and reciprocating-engine airplanes, to reflect the current needs of industry, accommodate future trends, address emerging technologies, and provide for future airplane operations. This action is necessary to eliminate the current workload of processing exemptions, special conditions, and equivalent level of safety findings necessary to certificate jets. The effect of the changes will: Enhance safety by requiring additional battery endurance requirements; increase the climb gradient performance for certain part 23 airplanes; standardize and simplify the certification of jets; clarify areas of frequent non-standardization and misinterpretation, particularly for electronic equipment and system certification; and codify existing certification requirements in special conditions for jets that incorporate new technologies.

DATES: These amendments become effective January 31, 2012.

FOR FURTHER INFORMATION CONTACT: For technical questions concerning this final rule, contact Pat Mullen, Regulations and Policy, ACE–111, Federal Aviation Administration, 901 Locust Street, Kansas City, MO 64106; *telephone:* (816) 329–4111; *facsimile:* (816) 329–4090; *email: pat.mullen@faa.gov.* For legal questions concerning this final rule, contact Mary Ellen Loftus, ACE–7, Federal Aviation Administration, 901 Locust Street, Kansas City, MO 64106; *telephone:* (816) 329–3764; *email: mary.ellen.loftus@faa.gov.*

SUPPLEMENTARY INFORMATION:

Authority for This Rulemaking

The FAA's authority to issue rules on aviation safety is found in Title 49 of the United States Code. Subtitle I, Section 106 describes the authority of the FAA Administrator. Subtitle VII, Aviation Programs describes in more detail the scope of the agency's authority. This rulemaking is promulgated under the authority described in Subtitle VII, Part A, Subpart III, Section 44701. Under that section, the FAA is charged with promoting safe flight of civil airplanes in air commerce by prescribing minimum standards required in the interest of safety for the design and performance of airplanes. This regulation is within the scope of that authority because it prescribes new safety standards for the design of normal, utility, acrobatic, and commuter category airplanes.

Table of Contents

I. Background
- A. Aviation Rulemaking Committee (ARC) Recommendations
- B. Summary of the Notice of Proposed Rulemaking
- C. Summary of the Final Rule
- D. Summary of the Comments

II. Discussion of the Final Rule
- A. 14 CFR Part 1: Clarifying Power and Engine Definitions
- B. Expanding Commuter Category To Include Turbojets
- C. Performance, Flight Characteristics, and Other Design Considerations
- D. Structural Considerations for Crashworthiness and High-Altitude Operations
- E. Powerplant and Operational Considerations
- F. General Fire Protection and Flammability Standards for Insulation Materials
- G. Additional Powerplant and Operational Considerations
- H. Additional Powerplant Fire Protection and Flammability Standards
- I. Avionics, Systems, and Equipment Changes
- J. Placards, Operating Limitations, and Information
- K. Test Procedures and Appendices

III. Regulatory Analyses

I. Background

A. Aviation Rulemaking Committee (ARC) Recommendations

On February 3, 2003, we published a notice announcing the creation of the part 125/135 Aviation Rulemaking Committee (68 FR 5488). The ARC completed its work in 2005 and submitted its recommendations to the FAA for safety standards applicable to part 23 turbojets. The ARC recommended modifying forty-one 14 CFR part 23 sections as a result of its review of these areas. Those documents may be reviewed in the docket for this final rule.

The safety standards are to reflect the current industry trends, emerging technologies and operations under parts 125 and 135, and associated regulations. The ARC also reviewed the existing part 23 certification requirements and the accident history of light piston-powered, multiengine airplanes up through small turbojets used privately and for business purposes. In addition, the ARC reviewed the special conditions applied to part 23 turbojets.

Based on those ARC recommendations, the FAA's intent is to enhance safety and to codify standards consistent with the level of safety currently required through special conditions. We compared the special conditions applied to part 23 turbojets, as well as several additional proposed part 23 changes, with the ARC's recommendations. With few exceptions, the ARC recommendations validated the FAA's long-held approach to certification of part 23 turbojets.

The ARC did not want to impose commuter category takeoff speeds for turbojets weighing more than 6,000 pounds, nor did the ARC want to impose more stringent requirements for one-engine inoperative (OEI) climb performance than those established for similar-sized piston-powered and turboprop, multiengine airplanes. The FAA ultimately accepted thirty-nine of the forty-one ARC recommendations and developed the proposed rulemaking in accordance with them. The two recommendations we disagreed with would have lowered the standards previously applied through special conditions.

B. Summary of the Notice of Proposed Rulemaking

The FAA issued the notice of proposed rulemaking (NPRM), ''Certification of Turbojets,'' on August 6, 2009 and published it for public comment on August 17, 2009 (74 FR 41556). The comment period for the NPRM closed on December 16, 2009 after a one-month extension.

The FAA proposed the adoption of 67 new or revised amendments in the NPRM. The amendments were proposed to codify previous certification activity.

C. Summary of the Final Rule

This final rule adopts 59 of the 67 proposed amendments. We have also amended §§ 23.65 and 23.1431 in this final rule based on comments received. Changes to § 23.65 make it consistent with the changes made to § 23.63. Editorial changes to § 23.1431 are based on paragraph designation changes to § 23.1309.

This final rule mainly levies new regulations for part 23 jets. These new

regulations generally fall into the following categories:

- Airplane flight performance and stability
- Airplane structural and cabin environment
- Airplane avionics systems and electrical equipment
- Powerplant considerations
- Flammability standards

The majority of this final rule allows manufacturers of jets to achieve product certification without the numerous special conditions, equivalent level of safety (ELOS) findings, and exemptions previously required to certificate these products. Therefore, this final rule reduces the certification burden on the applicant and allows the FAA to focus resources on other safety-critical items. In addition, this final rule enhances safety by requiring additional battery endurance requirements and increasing the climb gradient performance for certain part 23 airplanes.

D. Summary of the Comments

The FAA received 244 substantive comments from 14 commenters. All of the commenters generally supported the proposed changes. The comments included suggested changes, which are discussed more fully below in Section II, Discussion of the Final Rule.

The FAA received no comments on the following sections, and they are adopted as proposed or with minor editorial changes:

- 23.77, Balked landing
- 23.853(d)(2), Passenger and crew compartment interiors
- 23.1303(c), Flight and navigation instruments
- 23.1445, Oxygen distribution system
- 23.1447, Equipment standards for oxygen dispensing units
- 23.1545, Airspeed indicator
- 23.1555, Control markings
- 23.1559, Operating limitations placard
- 23.1563, Airspeed placards
- 23.1567, Flight maneuver placard

The FAA received comments from manufacturers, foreign aviation authorities, and industry associations. No commenters recommended withdrawing the NPRM. Most of the commenters provided suggestions for improvement or requested clarification of specific proposed amendments. Some commenters recommended that several proposed amendments (or portions of them) not be adopted. However, objection to one proposed amendment did not equate to overall objection to the NPRM.

The following areas are the key concerns expressed by industry:

- Mandating software and complex hardware development assurance levels
- Requirement for electronic engine controls to meet the requirements of § 23.1309 ''Equipment, systems and installations''
- Subpart B, Flight, and Subpart G, Operating Limitations and Information
- Requirement for ''two shot'' fire extinguishing systems for engines embedded within the fuselage
- Codifying high-altitude operations
- Requirements for electronic displays in part 23 airplanes
- Part 1 definitions (§ 1.1)

The FAA also received comments regarding FAA policy, means of compliance, and suggested changes to advisory circulars and regulations not included in the NPRM. These comments are considered to be beyond the scope of this rulemaking effort. No further discussion of them occurs in this final rule.

II. Discussion of the Final Rule

A. 14 CFR Part 1: Clarifying Power and Engine Definitions

The FAA proposed to amend § 1.1 definitions for ''rated takeoff power,'' ''rated takeoff thrust,'' ''turbine engine,'' ''turbojet engine,'' and ''turboprop engine.'' Defining engine-specific terms was proposed to clarify the new requirements in part 23. Communications between the FAA and members of industry indicated a need to define those terms. These communications were mainly based on current part 1 definitions for ''rated takeoff power'' and ''rated takeoff thrust,'' which currently limit the use of power and thrust ratings to no more than five minutes for takeoff operation.

The FAA received comments from Rolls Royce, Transport Canada, General Electric (GE), and the European Aviation Safety Agency (EASA) objecting to the proposed definitions. The FAA agrees with the commenters that ''rated takeoff power,'' ''rated takeoff thrust,'' ''turbine engine,'' ''turbojet engine,'' and ''turboprop engine'' are not used consistently in Title 14, Code of Federal Regulations (14 CFR).

Defining engine types—whether turbine-powered (turbine), turbojet-powered (turbojet), or turbopropeller-driven (turboprop)—is unnecessary because they are commonly understood by those within industry. However, the commenters make a valid point regarding changes to the definitions for ''rated takeoff power'' and ''rated takeoff thrust.'' These terms may not necessarily be accepted for use in part 25, and as such, should not be defined under § 1.1.

The Engine and Propeller Directorate is currently working to establish common definitions for ''rated takeoff power'' and ''rated takeoff thrust'' that would apply to both part 23 and part 25 airplanes. The proposals to add these definitions are withdrawn to allow the Engine and Propeller Directorate time to complete its work on this effort.

B. Expanding Commuter Category to Include Jets

The FAA proposed to revise § 23.3 to codify the current FAA practice of certificating multiengine jets weighing up to and including 19,000 pounds under part 23 in the commuter category. Prior amendments to part 23 limited § 23.3 commuter category to propeller-driven, multiengine airplanes weighing no more than 19,000 pounds. However, the FAA issued exemptions to allow jets weighing more than 12,500 pounds to be certificated under part 23, commuter category.

The FAA received comments from Transport Canada and EASA. Transport Canada proposed that jets with seating capacity of 10 or more (excluding pilot seats), or maximum certificated take-off weight of more than 12,500 pounds, continue to be certificated using part 25 transport category requirements in Subpart B: Performance. EASA suggested the rule pertain to ''high performance'' rather than ''multiengine'' airplanes.

The FAA did not adopt either comment. Transport Canada's comment was not adopted because part 23, Subpart B has been shown to be an acceptable means of compliance for airplanes weighing up to 19,000 pounds. This final rule retains that weight limit. EASA's comment was not adopted because ''high performance'' is an undefined, subjective term relative to airplane certification. Therefore, § 23.3 is adopted as proposed.

C. Performance, Flight Characteristics, and Other Design Considerations

1. Performance

The FAA proposed to incorporate in part 23 the current special conditions approach for jets weighing more than 6,000 pounds by applying most commuter category performance requirements. The proposed revisions to § 23.45 would apply the commuter category performance requirements for the normal, utility, and acrobatic categories to multiengine jets weighing more than 6,000 pounds.

As a general matter, several commenters recommended replacing

the proposed propulsion-based criteria with performance-based criteria. The FAA agrees, as indicated in the Small Airplane Directorate's Certification Process Study from 2009 which recommends revising part 23 based on airplane performance and complexity versus propulsion and weight. However, amending part 23 to a performance-based standard is a substantially larger initiative than this rulemaking effort.

During rulemaking discussions, the ARC decided that applying the commuter category takeoff performance requirements in proposed revisions to §§ 23.51 through 23.61 would include restrictions that could become a takeoff weight limitation for operations. The concern was that these requirements would be too restrictive for part 91 operations.

The FAA disagreed with the ARC concerning multiengine jets weighing more than 6,000 pounds. The FAA has several decades of experience applying existing special conditions to part 23 jets. The performance requirements for these jets have proven successful for part 91 operations and are necessary to maintain the existing level of safety.

We received three comments regarding this proposal. EASA supported the changes and suggested requirements be extended to all jets, not just to those weighing more than 6,000 pounds. Diamond Aircraft (Diamond) asked why this rule did not apply to turboprops and piston-powered airplanes. Transport Canada proposed that the all-engines-operating accelerate-stop distance be determined in addition to the one-engine inoperative (OEI) distance, and the greater of the two be used as the accelerate-stop distance.

Again, the Small Airplane Directorate's Certification Process Study from 2009 recommends revising part 23 based on performance and complexity versus propulsion and weight. We have not yet proposed to completely rewrite part 23, and doing so would be beyond the scope of this rulemaking. Accordingly, no change was made to the proposal in this final rule, except to change the word ''turbojet'' to ''jet'' wherever appropriate in this final rule.

The FAA proposed revisions to §§ 23.63 and 23.67 to enhance safety by increasing the OEI climb gradient performance for multiengine piston-powered airplanes weighing more than 6,000 pounds and for all multiengine turbines. We proposed no change to the current 2 percent OEI climb gradient that has been consistently applied via special condition for multiengine jets weighing more than 6,000 pounds.

We proposed to revise the OEI climb gradient requirements to require a 1 percent OEI climb gradient for all multiengine turboprops and multiengine piston-powered airplanes weighing more than 6,000 pounds. We did so because of the similarity in how these two types of airplanes are used. Multiengine jets weighing 6,000 pounds or less will be required to meet an OEI climb gradient of 1.2 percent with this revision.

The FAA has revised § 23.63(c) and (d), and § 23.67(b) and (c) to reflect these changes to the climb gradient requirements. The FAA also made a minor editorial change to replace ''turbojet engine-powered'' with ''jet'' wherever appropriate in this final rule to simplify the term. Table 1 summarizes those changes:

TABLE 1—ONE-ENGINE INOPERATIVE (OEI) CLIMB REQUIREMENTS TO 400 FEET ABOVE GROUND LEVEL AGL

Multiengine category	Current rule	ARC's recommendation (percent)	FAA's position in final rule (percent)
Pistons > 6,000 lbs	Measurably positive	1.0	1.0
Turboprops ≤ 6,000 lbs	Measurably positive	1.0	1.0
Turboprops > 6,000 lbs	Measurably positive	1.0	1.0
Jets ≤ 6,000 lbs	Measurably positive	1.0	1.2
Jets > 6,000 lbs	2.0% imposed through special conditions	1.0	2.0

The FAA received comments on §§ 23.63, 23.65, and 23.67 from Transport Canada, Hawker Beechcraft, and Diamond. Transport Canada stated that the proposed § 23.63 would conflict with the existing § 23.65. The FAA has accordingly revised § 23.65 for consistency. Hawker Beechcraft stated that the change from ''must be measurably positive'' to ''may be no less than 1 percent'' could reduce takeoff payload by a maximum of 900 pounds. This would limit the utility of a normal category turboprop under high-hot conditions with takeoff flaps. The FAA understands that leveling the turboprop requirements with certain jets will cause a loss of utility and market disadvantage. However, given similar missions (many in revenue service), turboprops should be held to a performance standard similar to that for jets. The FAA reviewed the current service history safety data for these airplanes. Based on this data, the FAA only required half the single-engine climb requirements of multiengine jets.

Diamond stated that this makes sense to a certain degree if the reasoning behind it is that turbines are capable of better performance than piston-powered airplanes. However, Diamond asked if there is a need to require compensating features if the airplane cannot meet a reasonable climb gradient. Diamond also asked why the FAA would change to a safer engine type if history has not shown there to be a problem with the current engine type. Diamond further stated that this requirement should be consistent with those for turbines, with no distinction between jets and turboprops. The FAA partially agreed and, as stated above, adopted an OEI climb gradient of 1 percent.

The FAA received a comment from GE on the economic benefit of improved climb performance. GE stated that the improved climb performance is not a new requirement, and it is currently imposed by special condition. Since that special condition is not changing—it is now only being levied by this final rule—GE asked how a safety benefit can be credited to the rule.

The FAA believes that adding this special condition as a requirement in part 23 will not only have a safety benefit, but it will also enhance our efforts toward continued operational safety. Special conditions are aircraft-specific and have not been issued for every part 23 airplane. Section 23.67 (and § 23.77, which was adopted without change) addresses the additional climb performance for all part 23 turbojets and turboprops. The additional climb performance requirements will apply to all new part 23 turboprops and part 23 turbojets under 6,000 pounds, thereby increasing the operational safety of those newly certificated airplanes.

In addition, special conditions increase paperwork and workload for FAA and industry. Also, they create uncertainty for the manufacturer during

design. By incorporating the improved climb performance into part 23, special condition paperwork will be reduced and, in effect, will allow FAA and industry resource leveraging towards other safety-critical endeavors in our goal of continued operational safety.

In developing cost estimates for the NPRM, the FAA contacted members of the ARC to determine when and if special conditions were voluntarily accepted by industry. When a special condition is voluntarily accepted by industry, the FAA does not include the special condition(s) cost in the regulatory impact assessment (RIA). When industry informs the FAA that a special condition will impose costs on industry, as do §§ 23.67 and 23.77, the FAA estimates the incremental cost between the current and final rule.

The FAA proposed to correct a reference error to a velocity term in § 23.73. Maximum landing configuration stall speed (V_{SO}) was changed to specified flap configuration stall speed (V_{S1}). V_{SO} is not applicable to other flap configurations. The reference landing approach speed (V_{REF}) is based on 1.3 times the V_{S1}. The FAA proposed to amend the standards to address airplanes certificated under part 23 that may have more than one landing flap setting. Additionally, the FAA proposed to include multiengine jets weighing more than 6,000 pounds in the commuter category requirements.

The FAA received one comment. Diamond stated that the distinction between jet engines and other engine types may not be appropriate. It suggested the requirement for a higher level of safety be related to performance, not to engine type. As stated earlier, the FAA has determined that amending part 23 to a performance-based standard is a substantially larger initiative and beyond the scope of this rulemaking effort.

2. Flight Characteristics

In § 23.175(b), the FAA proposed to define the maximum speed for stability characteristics (V_{FC}/M_{FC}). The term V_{FC}/M_{FC} was added to part 23 in the last large-scale revision to Subpart B, but the definition was inadvertently omitted.

EASA commented on multiple proposed sections that it applies a special condition for high-speed characteristics that are not included in our proposal. EASA's comments suggested these sections be drafted as a performance-based standard. However, amending part 23 to a performance-based standard is a substantially larger initiative than this rulemaking effort.

The FAA also received comments from Transport Canada and Cessna regarding flight characteristics. Both commenters recommended that we include the definition of V_{FC}/M_{FC} in § 23.253 for consistency with part 25. The FAA agrees and has relocated the definition for it from § 23.175 to § 23.253.

The FAA proposed revisions to § 23.177 that would have clarified the specific speed limitations to include jets. The proposed speed limitations also included specific criteria (''V_{FE}, V_{LE}, V_{NO} or V_{FC}/M_{FC} as appropriate'' as defined in Part 1).

The FAA proposed to relax the stability requirements in § 23.181 for airplanes operating above 18,000. The original requirements were developed for small airplanes typically operated under 18,000 feet and not equipped with yaw dampers. The existing requirement is still appropriate for low-altitude operations, such as for approaches. However, the existing requirement is not appropriate for larger airplanes that typically use yaw dampers and fly at altitudes above 18,000 feet. In fact, the FAA has issued multiple ELOS findings for most certificated part 23 jets because such findings were appropriate for high-altitude, high-speed operations.

The FAA received comments from EASA, Cessna, and Emivest. EASA commented in multiple sections that it applies a special condition for high-speed characteristic not included in our proposal. EASA's comment suggests a performance-based standard. Amending part 23 to a performance-based standard is a substantially larger initiative than this rulemaking effort.

Cessna suggested § 23.181 include a similar definition to the revised § 23.177. The FAA agrees with Cessna's comment and added that definition to § 23.181.

Emivest recommended that part 23 allow the lower standard found in part 25 for flight above 18,000 feet. The FAA disagrees with this recommendation. Part 23 airplanes are frequently flown by a single pilot and operated under part 91. Single pilots operating part 23 airplanes may not necessarily have the same experience level as part 25 airplane pilots. Therefore, the stability and control requirements in part 23 will remain higher than in part 25.

We proposed revisions to the stall requirements in §§ 23.201 and 23.203 to include jets and a new generation of part 23 airplanes with high-power and high-altitude capability.

The proposed revisions included:

- Incorporating additional configurations for all part 23 airplanes;
- Clarifying flap and gear position as appropriate for the altitude and flight phase;
- Relaxing the roll-off requirements for high-altitude stalls; and
- Defining what is meant by ''extreme nose-high attitudes.''

The FAA received comments from the General Aviation Manufacturers Association (GAMA) and Emivest. GAMA stated the requirement for the demonstration of control during entry and recovery from wings level stall is unnecessary above 1.5 V_{S1} instead of 1.6 V_{S1}, as this requirement matches the requirements applicable to part 25 airplanes. The FAA agrees and has made the necessary change to be consistent with the requirements for part 23 jets.

Emivest recommended the FAA allow the lower handling characteristic standards from part 25, specifically being able to control rolling from 15 to 20 degrees of roll. The FAA does not believe that this is appropriate for all altitudes. Parts 23 and 25 still have a considerable number of stall/departure accidents at low altitudes, even with stall barrier devices. The FAA is moving part 23 towards even more benign stall characteristics and additional stall protection systems.

The FAA determined that relieving the controllability requirements in § 23.201 across the entire altitude capability would move part 23 in the wrong direction—inconsistent with current stall requirements. Considering that most stall accidents occur at low altitudes, this revision would relax the stall handling characteristic roll requirement to 25 degrees for stalls at or above 25,000 feet. We believe this is an acceptable action for this flight regimen for the class of airplane operating at or above 25,000 feet.

The FAA proposed to incorporate provisions from §§ 25.251(d) and (e) into § 23.251 while limiting the requirements to airplanes that fly over 25,000 feet or that have a Mach Dive Speed (M_D) faster than Mach (M) 0.6. The proposed revision also included the use of V_{DF}/M_{DF}, as referenced in part 23 jet special conditions.

The FAA received similar comments from Cirrus and Transport Canada. Cirrus stated that § 23.251(b) and (c) use the term ''perceptible buffeting,'' which is a subjective term. Cirrus requested a concise term to differentiate ''normal vibration'' from ''perceptible buffeting,'' or a standard definition of ''perceptible buffeting.'' The FAA will address this comment in an advisory circular, which we believe is the appropriate place to address it.

Transport Canada stated that the use of operational speeds is considered more appropriate than using a design speed as criteria. The FAA understands the commenter's point. For this situation, however, the FAA believes the part 23 speed rationale should parallel the rationale in part 25 for consistency in our decisions for continued aviation safety.

The FAA revised § 23.253(b) to add the use of demonstrated flight diving speed (V_{DF}/M_{DF}) as applicable, consistent with standards in § 25.253. The FAA also moved the proposed definition for V_{FC}/M_{FC} from § 23.175 to this section as paragraph (d).

The FAA proposed adding § 23.255 to include new requirements that consider potential high-speed Mach effects for airplanes with M_D greater than M 0.6. The FAA proposed these requirements, which came from part 25, for airplanes that incorporate a trimmable horizontal stabilizer. This decision was based on the positive service history with the existing fleet of part 23 jets designed with conventional horizontal tails and those that use trimmable elevators. Airplanes that experienced upset incidents involving out-of-trim conditions were part 25 certificated airplanes and designed with a trimmable horizontal stabilizer.

The FAA received a comment from Transport Canada, stating that this requirement should apply to all horizontal tail configurations as required for transport category airplanes. The FAA disagrees with Transport Canada. The high-performance airplanes that will be certificated under part 23 are similar to those that have established a positive service history using similar regulations; therefore, this final rule has not been changed as a result of this comment.

D. Structural Considerations for Crashworthiness and High-Altitude Operations

1. Design and Construction

The FAA proposed changes to § 23.561 to address structural requirements for engines contained within the fuselage and located behind the passenger cabin. The FAA proposed these changes to: (1) Add structural requirements to single-engine jets with centerline engines embedded in the fuselage, and (2) minimize the likelihood of the engine breaching the passenger compartment in the event of an emergency landing. The proposal would have reduced the potential for the engine to separate from its mounts under forward-acting crash loads and subsequently intrude into the passenger compartment (*i.e.,* cabin).

The FAA received several comments on this proposed change. EASA suggested the proposed rule should be expanded to include any engine mounted inside the fuselage and aft of the cabin, not just turbojet engines. The FAA agrees with EASA. Any engine mounted in this type of configuration may be a hazard to cabin occupants in the event of an emergency landing, so the regulation should not be limited to turbojet engines. The proposed amendment has been modified to capture this comment.

Transport Canada stated that the proposed load factors should be adjusted upward if the V_{S0} of the airplane exceeds 61 knots. The FAA disagrees with Transport Canada since the proposed regulation would require the engine to be retained at 18 g in combination with maximum takeoff thrust. This approach is reasonable for engine retention.

Transport Canada also stated that the attached accessories need not be required to withstand the added load of maximum engine takeoff thrust since accessories do not react to engine thrust loads. The FAA disagrees with this comment. While engine accessories should not directly react to engine thrust loads, engine accessories impart a load to their mounting structure. This load is typically highest when the engine is producing maximum takeoff thrust. The intent of this rule is to ensure the engine and its accessories do not penetrate the cabin in an emergency landing.

Transport Canada further stated that proposed § 23.561(e)(1)(ii), which in the relevant part states ''to deflect the engine'' may be too limited. The commenter suggested there are other methods an airplane designer may propose, such as an energy-absorbing bulkhead or barrier. We agree, and by adopting this comment, the rule will be more performance-based and preclude dictation of the airframe design. The FAA has changed this final rule accordingly.

The FAA proposed changes to § 23.562 to require dynamic seat testing for commuter category jets. The FAA also proposed changes to the Head Injury Criteria (HIC) calculation in § 23.562 to be consistent with the HIC calculation contained in § 25.562.

Our intent with the proposed rule was to codify a requirement that has become industry practice. All manufacturers of those recently certificated commuter category jets have agreed to comply with § 23.562. It was not our intent to include commuter category propeller-driven airplanes in § 23.562 in light of the rulemaking history associated with that effort.[1] The FAA has decided against adding commuter category propeller-driven airplanes to § 23.562 at this time. The FAA reserves the right, however, to reconsider this position in the future should adverse service history suggest changes are necessary.

In addition, the FAA received comments from several organizations indicating a mistake in the proposed HIC calculation. The commenters stated that the proposed definition of ''a(t)'' would require calculating HIC for the entire head acceleration time, not just for the time of impact with interior components. The FAA agrees the proposed rule did not specify the word ''strike'' when defining ''a(t)'' as the total acceleration versus the time curve for a head strike. The FAA has made the necessary changes to the definition of ''a(t)'' in this final rule so it is clear that HIC is calculated for the head strike only.

The NPRM included new sections in §§ 23.571, 23.573, and 23.574, which noted additional requirements referencing the new high altitude requirements of § 23.841(e). These additional requirements included the establishment of a Limit of Validity (LOV), as well as additional test requirements. Several commenters, including Cessna and GAMA, objected to the LOV concept due to the burden it could place on applicants. Upon consideration of these comments the FAA agrees we need additional time to consider the need for LOV. Therefore, we consolidated the requirements into § 23.571(d) and removed the reference to § 23.841. Proposed § 23.841(e), which contained the LOV and additional test requirements, has been withdrawn.

Section 23.571(d) still requires the damage tolerance option under § 23.573 to be used on airplanes that exceed 41,000 feet. Section 23.571(d) will also require that damage tolerance be used to evaluate structure for operations above 41,000 feet on all airplanes except commuter category. Commuter category airplanes are already required to use damage tolerance under § 23.574. The FAA has modified § 23.571 as discussed and withdrawn the proposed revisions to §§ 23.573 and 23.574.

In addition, GE stated it would be difficult to comply with the proposed § 23.841, given all of the exemptions granted for this rule in the past. The FAA disagrees with this comment, but GE is correct that a number of exemptions have been granted.

[1] The FAA provided a history of the previous rulemaking effort in the NPRM. 74 FR 41522.

However, all but one of the exemptions were for part 25 airplanes. This single part 23 airplane exemption dealt with the method of compliance for this rule. (*See* Exemption No. 5223; also, a copy of this exemption will be placed in the docket for this rulemaking.)

As noted above, the proposed rule has been revised, and previous part 25 exemptions are irrelevant to the subject part 23 airplanes. Several jets have successfully met depressurization profiles, thereby meeting appropriate part 23 certification requirements.

The FAA proposed to clarify the use of either the M_D or the Dive Velocity (V_D) in § 23.629, whichever is appropriate, for jets. As dive speeds increase with high performance airplanes, the compressibility effects of the air become more significant; therefore, it is more appropriate to refer to M_D instead of V_D. Proposed changes would have also allowed the use of a ''demonstrated'' flight dive speed (V_{DF}/M_{DF}) instead of the theoretical speeds (V_D/M_D) when flight flutter testing jets. Using a demonstrated speed, in lieu of a theoretical speed, can relieve some compliance burden when an airplane is unable to attain those theoretical dive speeds during the test phase of an airplane certification program.

Cessna stated that the FAA was attempting to align the part 23 small airplane flutter requirements with those of part 25 for transport category airplanes. The FAA does not agree with this summary of the change. While the change is similar to certain transport category requirements, there was no decision in this case to make this part 23 requirement identical to part 25 requirements. The FAA seeks only to establish a category-appropriate rule for jets which balances many factors; those factors include risk management, safety, and cost.

Cessna stated that in one paragraph the FAA only made the change to add the Mach dive speed designation, but did not include the option for the demonstrated flight speeds. The FAA agrees with Cessna. It was inadvertently omitted from the proposed rule language. The FAA adopted that change in the final rule.

Cessna further stated the proposal implied that the flutter analysis need only be performed to the demonstrated flight speed. The FAA agrees the wording was misleading and ambiguous. Therefore, the proposed language is revised to clarify that the flutter analysis must be performed to 20 percent above the design dive speed or 20 percent above the design Mach dive speed, whichever is appropriate. Additionally, § 23.629 is revised to clarify that the 20 percent margin above the design dive speed need not go above Mach 1.0, as this unnecessarily complicates the analysis.

2. Other Design Considerations

Proposed revisions to § 23.703 introductory text and paragraph (b) would have added takeoff warning system requirements to all airplanes weighing more than 6,000 pounds and to all jets. The definition of an unsafe condition, in this case, is the inability to rotate or prevent an immediate stall after rotation. High temporary control forces that can be quickly ''trimmed out'' would not necessarily be considered unsafe.

The FAA received two comments. EASA suggested the rule did not address all devices for a safe takeoff. Diamond asked why this rule did not apply to turboprops and piston-powered airplanes.

Parking brakes and antiskid devices are optional installations and cannot be required by this rule; but if installed, optional installations can be included in the determination of an unsafe takeoff condition. Also, this rule applies to all airplanes weighing more than 6,000 pounds and to jets of any weight. Therefore, turboprops and piston-powered airplanes weighing more than 6,000 pounds are included. The FAA inadvertently modified § 23.703(b) in the NPRM. Our intent was to add a new section, § 23.703(c). The FAA is adopting § 23.703(c) as originally intended and with a minor editorial change.

The FAA changed the rejected takeoff requirements in § 23.735, which were previously only for commuter category airplanes, to be applicable for all multiengine jets weighing more than 6,000 pounds. The higher takeoff speeds and distances for these airplanes make the ability to stop in a specified distance a safety issue.

Two commenters suggested adding similar rejected requirements from part 25. Adding these part 25 requirements, however, was not part of the NPRM. In this case, the part 25 requirements are too stringent for part 23 airplanes. We cannot justify those more stringent requirements based on our current service history.

E. Powerplant and Operational Considerations

Previous amendments to § 23.777 standardized the height and location of powerplant controls because pilots may become confused and use the wrong controls on propeller-driven airplanes. However, previous amendments did not include single-power levers (which are typical for electronically-controlled engines). The FAA made an ELOS finding for each airplane program that included a single-power lever. Revised paragraph (d) in § 23.777 incorporates the ELOS language.

The FAA received one comment that the requirement for power (thrust) levers should be easily distinguishable for human factor considerations instead of one inch higher than mixture and propeller levers. The FAA agrees with this comment and revised the rule to delete the one-inch requirement and changed the wording to easily distinguish the power levers from other controls.

The FAA proposed to provide an alternative to meeting the requirement for an emergency exit above the waterline on both sides of the cabin for multiengine airplanes. The proposed change to § 23.807 allows the placement of a water barrier in the main cabin doorway before the door is opened as a means to comply with the above waterline exit requirement. This barrier is above the waterline and slows the water inflow, thus allowing exit through the main cabin door in a ditched airplane. The FAA approved the use of this barrier as an alternative to the above waterline exit for several airplanes by issuing an ELOS finding.

The FAA received two comments. Emivest stated the rule language would permit a main cabin door below the waterline to be approved as an emergency exit. Embraer stated a water barrier should be allowed regardless of whether the main cabin door is above the waterline since the determination of the waterline is undefined.

The FAA disagrees with both comments. The new § 23.807(e)(3) states ''may'' because the new paragraph is an option for paragraph (e)(2), which specifies an overhead exit if side exits cannot be above the waterline. Furthermore, buoyancy analysis is standard practice to determine the waterline of an airplane. There is no reason to provide a water barrier if the emergency exit is above the waterline. Therefore, no changes were made to the proposal in this final rule.

The FAA proposed amending § 23.831 by adding new paragraphs (c) and (d), which would include standards appropriate for airplanes operating at high altitudes beyond those included in part 23. The changes were intended to ensure that flight deck and cabin environments do not result in the crew's mental errors or physical exhaustion. Such an event would prevent the crew from successfully completing assigned tasks for continued safe flight and landing of an airplane. An applicant

may demonstrate compliance with paragraph (d) of this requirement if the applicant can show the flight deck crew's performance is not degraded.

Several new part 23 jet certification programs include approval for operations at altitudes above 41,000 feet. Additionally, the FAA issued special conditions for operations up to 49,000 feet and changed rules for structures and the cabin environment to ensure structural integrity of the airplane at higher altitudes. The FAA also made rule changes to prevent exposure of the occupants to cabin pressure altitudes that could cause them physiological injury or prevent the flight crew from safely flying and landing the airplane.

The FAA intended the requirement ''* * * must not affect crew performance so as to result in a hazardous condition * * *'' to mean the crew can reliably perform published and trained duties to complete a safe flight and landing. In the past, a person's ability to track and perform tasks was measured by crew performance; however, acceptable crew performance is limited to the procedures defined by the manufacturer or required by existing regulations. The FAA uses ''No occupant shall sustain permanent physiological harm'' to describe the requirement that occupants who may have required some form of assistance must be expected to return to their normal activities once treated.

Cirrus and Transport Canada stated the proposal, as written, applied to all phases of flight, including slow speed phases. The proposal was intended to apply to flight above 41,000 feet. The final rule for paragraphs (c) and (d) is changed to state the paragraphs are applicable only for the cruise phase of flight above 41,000 feet.

Diamond suggested the rule should apply to all pressurized airplanes, not just to jets. The intent of the proposal was for it to apply to airplanes that operate above 41,000 feet. The FAA is unaware of any turboprops or piston-powered airplanes that operate above 41,000 feet. Special conditions would be applied to a turboprop or piston-powered airplane with a maximum service ceiling above 41,000 feet.

EASA stated two figures used for high-altitude airplanes, regarding the time temperature correlation, were not included. That oversight is corrected in this final rule.

We proposed amending requirements in § 23.841 to prevent exposure of the occupants to cabin pressure altitudes that could keep the flight crew from safely flying and landing the airplane, or cause permanent physiological injury to the occupants. The changes provide airworthiness standards that allow subsonic, pressurized jets to operate at their maximum achievable altitudes—the highest altitude an applicant can choose to demonstrate the effects to several occupant-related items after decompression. The applicant must show that: (1) The flight crew would remain alert and be able to fly the airplane, (2) the cabin occupants are protected from the effects of hypoxia (*i.e.,* deprivation of adequate oxygen supply), and (3) if some occupants do not receive supplemental oxygen, they are protected against permanent physiological harm.

Several new part 23 jet certification programs include approval for operations at altitudes above 41,000 feet. Additionally, we issued special conditions for operations up to 49,000 feet. In this final rule, we changed rules for structures and the cabin environment to ensure structural integrity of the airplane at higher altitudes.

Earlier amendments required the cabin pressure control system to maintain the cabin at an altitude of not more than 15,000 feet if any probable failure or malfunction in the pressurization system occurred. Cabin pressure control systems on part 23 airplanes frequently exhibit a slight overshoot above 15,000 feet cabin altitude before stabilizing below 15,000 feet. Existing technology for cabin pressure control systems on part 23 airplanes cannot prevent this momentary overshoot, which prevents strict compliance with the rule. The FAA granted ELOS findings for this characteristic because physiological data show that the brief duration of the overshoot has no significant effect on an airplane's occupants.

Special conditions issued for part 23 jets to operate at altitudes above 41,000 feet are equivalent to the requirements in § 25.841 adopted in Amendment 25–87 (61 FR 28684, June 5, 1996). The amendment in this final rule modified § 23.841 to include requirements for pressurized cabins previously covered only in special conditions. The special conditions required consideration of specific failures. Part 25 incorporated reliability, probability, and damage tolerance concepts addressing other failures and methods of analysis after the issuance of the special conditions. Sections 23.571, 23.573, and 23.574 address the damage tolerance requirements. This final rule requires the use of these additional methods of analysis.

Part 23 requires a warning of an excessive cabin altitude at 10,000 feet. Part 23 does not adequately address operations at airfield elevations above 10,000 feet. Rather than disable the cabin altitude warning to prevent nuisance warnings, the FAA has issued ELOS findings allowing the warning altitude setting to be shifted above the maximum approved field elevation, not to exceed 15,000 feet. The FAA proposed to modify § 23.841 to incorporate language from existing ELOS findings into the regulation.

The FAA received nine comments on this proposal. Several commenters disagreed with the structure of the initial proposed rule, the use of the noted damage tolerance principles, and the general systems rule for pressurization at high altitude. While EASA supported establishment of a Limit of Validity (LOV) and additional testing, Cessna, Embraer, and GAMA disagreed with the implementation of these concepts, which are not currently used in part 23.

In response to comments from GAMA and Embraer, the FAA changed paragraph (b)(6)(ii) to permit a single operation for high altitude takeoffs and landings. In response to a comment from GE, paragraph (c)(2) is changed to exclude improbable failures.

In addition, ruptures must be limited to control pressurized cabin breeches. Rapid pressure loss at high altitudes may result in physiological damage to the occupants. Section 23.841 defines acceptable depressurization profiles in such an event, and the pressurized structure serves as a part of the system to ensure the minimum cabin pressure is maintained. To control the cabin pressure vessel breeches in the fuselage structure, the noted damage tolerance principles are used (specifically borrowing the process referenced in § 23.573(a) or (b)).

F. General Fire Protection and Flammability Standards for Insulation Materials

The FAA proposed upgrading flammability standards for thermal and acoustic insulation materials by adding a new § 23.856. The previous standards did not realistically address situations where thermal or acoustic insulation materials may contribute to producing a fire. The changes are based on the requirements in § 25.856(a) and part VI, Appendix F, which were adopted following accidents involving part 25 airplanes, such as the Swissair MD–11. The proposed new standards would enhance safety by reducing the incidence and severity of cabin fires, particularly those in inaccessible areas where thermal and acoustic insulation materials are installed.

The proposed new standards also would include flammability tests and criteria that address flame propagation. They would apply to thermal/acoustic insulation material installed in the fuselage of part 23 airplanes.

Prior amendments focus almost exclusively on materials located in occupied compartments (§ 23.853) and cargo and baggage compartments (§ 23.855). The potential for an in-flight fire is not limited to those specific compartments. Thermal/acoustic insulation can be installed throughout the fuselage in other areas, such as electrical or electronic compartments or surrounding air ducts, where the potential also exists for materials to spread fire.

Proposed § 23.856 accounts for insulation installed within a specific compartment in areas the regulations might not otherwise cover and is applicable to all part 23 airplanes, regardless of size or passenger capacity. Advisory material describing test sample configurations to address design details (*e.g.,* tapes and hook-and-loop fasteners) is available in DOT/FAA/AR–00/12, Aircraft Materials Fire Test Handbook, April 2000.

Cessna stated this proposal should be limited to commuter category airplanes. The FAA disagrees because this hazard is not limited to commuter category airplanes. In addition, there has been a certification project to install this insulation in a normal category airplane.

G. Additional Powerplant and Operational Considerations

We inadvertently proposed to add requirements to § 23.903(b)(2) when we meant to propose a new paragraph (b)(3). This proposal was intended to protect passengers and maintain the ability for continued safe flight and landing following a fan disconnect event for fuselage-embedded, jet-engine installations.

The FAA received six comments on this proposed rule change. Cirrus favors avoiding the use of the ''embedded'' classification altogether; the FAA does not. The crux of Cirrus' position relates to the requirements for fire protection of embedded engines, and not protection against fan disconnect. Hawker Beechcraft, GE, and EASA commented on assessing the threat from fan disconnect questions as the means of compliance to this rule change.

For each airplane with an embedded engine, the FAA will provide project-specific guidance for an acceptable means of compliance regarding fan-disconnect concerns. If the engine does not have a failure mode that results in a fan-disconnect event, then basic compliance would need to show the failure cannot occur. In this instance, no further showing of compliance would be required. Transport Canada supports the rule change.

The FAA proposed adding a paragraph to § 23.1141 to require electronic engine control systems to meet the equipment, systems, and installation standards of § 23.1309. The FAA has applied this requirement to all digital engine control installations in part 23 airplanes by special condition for over ten years. The proposed rule change for § 23.1141 would have codified the requirements previously applied via special condition.

The FAA received six comments on this proposed rule change. Most of the comments questioned the need for the specific application of § 23.1309 to electronic engine control systems. Diamond, GAMA, and Hawker Beechcraft stated that compliance was already required. Cessna stated there were similar requirements in § 23.1141(e). GE stated there were no commensurate requirements in part 25, and that engine control was certificated in part 33. Transport Canada suggested the change should only address the electromagnetic environment and compatibility requirements, rather than all of § 23.1309.

The FAA has not directly adopted these comments. However, the comments highlighted the difficulties in using § 23.1309 as the primary means by which to certificate electronic engine control system installation. There are conflicts between the guidance material for § 23.1309 and propulsion system certification. One example is a single-engine turbine-powered airplane with a failure of the electronic engine control system which cannot meet the failure probability commensurate with the hazard. As a result, applicants have elected to declare a reduced hazard severity of a failure of the electronic engine control system. This is not the intent of § 23.1309. The greater hazard severity should drive lower probability of failure, and the higher probability of failure should not drive the lower hazard severity.

There is also a conflict between the hazard severity of a failure of an electronic engine control system and the required test levels for lightning and high intensity radiated frequency (HIRF). Testing to a level lower than required for a catastrophic failure results in a lower level of safety than the mechanical system it replaces. This is contrary to the intent of the certification requirements. As a result, the FAA decided to withdraw the proposed rule change and will continue to require the test levels via special conditions.

We also proposed to expand the requirement in § 23.1165(f) for all turbine engine installations in commuter category airplanes, as it is currently limited to turboprops. The revision to the rule covers all turbines in the commuter category and removes the propeller driven restriction. (The definition of commuter category is also changed in § 23.3(d).)

Transport Canada stated that the proposed rule conflicted with the gas turbine ignition systems for restarting an engine in flight, as required by § 23.903(e)(3), (f) and (g). The FAA does not agree with this comment, as there is no conflict with the cited rules. Embraer suggested that the rule should be reworded to state ''* * * each turbine engine ignition system must be considered an essential electrical load.'' The FAA disagrees, as the suggested change does not change the substance of the rule. The proposal is adopted without change.

H. Additional Powerplant Fire Protection and Flammability Standards

When the FAA initially introduced powerplant fire protection provisions in part 23, jet engines were not embedded in the fuselage, or in pylons on the aft fuselage, for airplanes certificated to part 23 standards. Sections 23.1193, 23.1195, 23.1197, 23.1199, and 23.1201 added fire protection requirements for commuter category airplanes.

Manufacturers also provide fire prevention through minimizing the potential for the ignition of flammable fluids and vapors. Historically, pilots were able to see engines and identify fires or use the incorporated fire detection systems, or both. The ability to see engines provided for the rapid detection of fires, which led to fires being rapidly extinguished. However, engine(s) embedded in the fuselage or in pylons on the aft fuselage do not allow the pilot to see a fire.

For airplanes equipped with fuselage-embedded engines, the consequences of a fire are more varied, adverse, and difficult to predict than an engine fire for a typical part 23 airplane. An engine embedded in the fuselage offers minimal opportunity to actually see a fire. Therefore, an engine's location becomes critical to the ability to see and extinguish an engine fire. With fuselage-embedded engines, an engine fire could affect both the airplane's fuselage and the empennage structure, which include the pitch and yaw controls. A sustained fire could further result in the loss of airplane control before a pilot could make an emergency landing.

Transport Canada stated that a clarification for embedded engines would be useful. The FAA believes the term ''embedded'' is not confusing. A general definition of the term, which is to enclose closely in a surrounding mass, is adequate. Therefore, we do not provide further clarification of the term in this final rule.

The FAA also proposed to change requirements in § 23.1195 for fire extinguishing systems, extinguishing agent containers, and fire extinguishing system materials. Diamond and Cirrus stated the issue is location of the engine(s) rather than the airplane category or type of engine. The FAA agrees and modified the rule to make it applicable to all part 23 airplanes with fuselage-embedded engines and to any part 23 airplanes with engines mounted in pylons on the aft fuselage. For embedded engine installations, a two-shot fire-extinguishing system would be required because the metallic components in the fire zone can become hot enough to reignite flammable fumes after extinguishing the first fire.

GAMA, Cessna, and Cirrus objected to the requirement for a two-shot fire extinguishing system if an engine is embedded. Commenters had various reasons for their objections. However, while engines other than those embedded in a fuselage could reignite a fire, the hazard of fire damage to empennage flight controls or primary structure is greater for embedded engines than for other engine mounting installations. Cirrus also stated the rule change was not needed because small airplanes, including some jets, can descend and land in 15 minutes, as stated in the NPRM.

We agree that some jets will likely be able to descend and land in 15 minutes without a problem, if an adequate airport is available. However, altitude is only one issue. These airplanes are approved for Instrument Flight Rules (IFR), so the ability to continue safe flight and landing also must consider time to descend under Air Traffic Control (ATC) through Instrument Meteorological Conditions (IMC) and make an approach and a go-around. Also, the ability to land off airport is an issue for an airplane with a 65 knot or higher stall speed.

I. Avionics, Systems, and Equipment Changes

The FAA proposed removing § 23.1301(d) to improve standardization for systems and equipment certification, particularly for non-required equipment and non-essential functions embedded within complex avionic systems. EASA stated it will retain § 23.1301(d). Individuals also asked the FAA to retain this paragraph for non-required equipment and systems and intended functions.

Section 23.1301(d) is directed towards environmental qualifications and operating conditions of the equipment and systems. The requirement in § 23.1309(a) replaces the requirement in § 23.1301(d) and, if § 23.1301(d) were retained, there would be a duplication of requirements. The requirement for intended function is further explained in §§ 23.1309(a)(1) and (a)(2) and the NPRM.

Removal of § 23.1301(d) aligns with the proposed changes to § 25.1301(d) that was developed by the Joint Aviation Authorities (JAA) of Europe and the Aviation Rulemaking Advisory Committee (ARAC), which was established on January 22, 1991 (56 FR 2190). We have decided to adopt this proposal without change.

Proposed § 23.1305 would have eliminated the need for an ELOS finding for digital engine display parameters. It would have added requirements regarding usability for an ELOS finding. In addition, the ELOS finding would include the requirements for color indications for normal operation, operation in a caution range, and exceeding any limitation. These changes, however, were not part of the NPRM. Furthermore, there would still be a need for an ELOS finding for digital engine display parameters due to the digital indications being noncompliant with the requirements of § 23.1549.

The FAA received seven comments. The FAA did not adopt these comments since the FAA is withdrawing the proposed change to § 23.1305.

The FAA proposed § 23.1307 to require applicants to install the equipment necessary for anticipated operations (for example, operations identified in parts 91 and 135 and meteorological conditions). Cirrus, Embraer, and GAMA stated that the examples identified in proposed § 23.1307 add little value and could increase burden on the manufacturer. The FAA agrees the certification applicant does not need to comply with the operational requirements of parts 91 and 135 at the time of certification. Therefore, we are withdrawing this proposal.

The FAA proposed changing the requirements for two different types of equipment and systems installed in the airplane. Section 23.1309 lists the qualifiers ''under the airplane operating and environmental conditions.'' This section also describes two actions for the applicant. First, the applicant must consider the full normal operating envelope of the airplane, as defined by the Airplane Flight Manual, with any modification to that envelope associated with abnormal or emergency procedures and any anticipated crew action. Second, the applicant must consider the anticipated external and internal airplane environmental conditions, as well as any additional conditions where equipment and systems are assumed to ''perform as intended.''

Section 23.1309(a)(2) requires analysis of any installed equipment or system with potential failure condition that are catastrophic, hazardous, major, or minor to determine their impact on the safe operation of the airplane. The applicant must show that they do not adversely affect proper functioning of the equipment, systems, or installations covered by § 23.1309 and do not otherwise adversely influence the safety of the aircraft or its occupants.

Section 23.1309(a)(2) does not mandate that non-required equipment and systems function properly during all airplane operations once in service, provided all potential failure conditions have no effect on the safe operation of the airplane. The equipment or system must function in the manner expected by the manufacturer's operating manual for the equipment or system. An applicant's statement of intended function must be sufficiently specific and detailed so that the FAA can evaluate whether the system is appropriate for the intended function(s).

Garmin and Hawker Beechcraft stated, ''* * * radio frequency energy and the effects (both direct and indirect) of lightning strikes'' should be removed from § 23.1309(a)(1). Their rationale is that there are specific requirements in § 23.1308 for HIRF and for lightning in §§ 23.867 and 23.954.

The NPRM included this phrase to replace the existing general requirements in § 23.1309(e) for the indirect effects of lightning. Since there is a specific HIRF requirement in § 23.1308, the FAA agrees to remove the words ''radio frequency.'' Sections 23.867 and 23.954 are requirements for the direct effects of lightning; therefore, the FAA also agrees to remove the word ''direct.''

Several months after the FAA issued the NPRM for this rule, the FAA issued an NPRM (75 FR 16676, April 2, 2010) proposing specific requirements for the indirect effects of lightning in proposed § 23.1306. The FAA plans to keep the requirement for indirect effects of lightning in § 23.1309(a)(1) until that final rule publishes.

GAMA and Garmin suggested deleting the phrase ''or systems whose improper function could reduce safety'' in

§ 23.1309(a)(1). However, they agree to the explanation of the requirements in the preamble of the NPRM. They also stated the rule would be challenging to comply with since proposed § 23.1309(b) deals with failure conditions such as the effects of malfunctions. The FAA agrees and has removed the phrase.

Several commenters stated that § 23.1309(a)(2) should be revised by replacing the beginning phrase ''Those required for type certification or by operating rules and other'' with ''Any.'' This revision is not a substantive change, and the FAA has revised the phrase as requested.

Cessna and Garmin stated that the safety assessment process in proposed § 23.1309(b) should not supersede the HIRF requirements of § 23.1308 and proposed § 23.1306, electrical and electronic system lightning protection. They also stated that the environmental effects, such as HIRF and lightning, should not be considered in combination with another single failure or pre-existing latent failure. The FAA agrees.

We proposed that § 23.1309(a)(3) be applicable for all functional reliability, flight testing, or flight evaluations. Proposed § 23.1309(a)(3) was revised to be applicable during Type Inspection Authorization (TIA) and FAA flight-certification testing.

Proposed § 23.1309(a)(3) is being changed to § 23.1309(b) in this final rule. Cessna, Embraer, and Garmin stated that the probability requirements were not appropriate for typical certification flight test, but portions of the preamble material are appropriate for advisory material. They also commented that root cause analysis and corrective action is the current industry practice and should be reflected in the rule. The FAA does not intend for the probability requirements, based on random distribution across a fleet of aircraft, to be applied on the beginning phase of operation. The FAA accepted these comments and modified proposed § 23.1309(b) in this final rule. This section was revised to be applicable during TIA and FAA flight-certification testing. This requirement now reads: ''Minor, major, hazardous, or catastrophic failure condition(s), which occur during TIA or FAA flight-certification testing, must have root cause analysis and corrective action.''

The FAA expects the applicant to show the system does not exhibit unintended or undesirable failure conditions that are minor, major, hazardous, or catastrophic. Guidance will be provided in AC 23.1309–1E.

Garmin stated that the FAA removed the catastrophic failure condition limitation for the Visual Flight Rules (VFR) airplane from proposed § 23.1309(b) without explanation. We removed this limitation since airplanes limited to VFR operation may have technologies that were not envisioned when Amendment 23–41 was developed. The advanced complex technologies now being installed also need to undergo the system safety assessment process.

Several proposed amendments to introductory text for § 23.1309 and Appendix K would have codified a long-established means of compliance with current equipment, systems, and installations requirements. We also proposed updating failure condition(s) terminology used in related system safety assessment documents developed by industry working groups (*e.g.,* RTCA and the Society of Automotive Engineers (SAE)). Some of this material identifies four classes of airplanes, as defined in Appendix K, and applies appropriate probability values and development assurance levels for each class. The FAA added this material as proposed requirements in the NPRM due to problems with one significant certification program.

EASA stated that the proposed requirements and current requirements are applicable and no hierarchy is implied. EASA also stated that both specific and general requirements should apply, and the exceptions to other requirements should be listed. Time and the often case-by-case nature of exceptions do not permit the FAA to list all (potential) exceptions for § 23.1309. The FAA has withdrawn the proposed exceptions from § 23.1309 but will list some of them in AC 23.1309–1E. The FAA will determine and consider additional exceptions in future revisions of AC 23.1309. Until then, applicants and certification authorities should contact the FAA, Small Airplane Directorate for approval of additional exceptions.

Boeing, Cessna, Cirrus, Diamond, Embraer, GAMA, Garmin, GE, and Hawker Beechcraft stated that the guidance and clarification to proposed sections and Appendix K should not be regulatory text and should only be in the guidance material of AC 23.1309–1E. They stated that most of these proposed changes would result in more confusion and less standardization. They also asserted that there would be more exemptions, ELOS findings, and complicated compliance demonstrations with no safety benefit. As such, this would cause additional burden, inefficiencies, and cost. The commenters further asserted that having this material available only as guidance would allow the applicant to choose an alternative to the proposed requirements as a means of compliance.

The FAA acknowledges that there has not been a problem with most applicants using this material as a means of compliance when only using AC 23.1309–1D, except for one type-certification program. Therefore, the FAA has decided not to proceed with the pertinent proposed amendments to § 23.1309(b)(4), (b)(5), (c), (d), and (e) and will also not codify Appendix K. As requested, this material will remain available as a means of compliance in AC 23.1309–1E. Proposed §§ 23.1309 (b)(1), (b)(2), and (b)(3) are now redesignated as §§ 23.1309(c)(1), (c)(2), and (c)(3) since proposed § 23.1309(a)(3) is redesignated as § 23.1309(b) in this final rule, as discussed above.

Cirrus stated that note 5 in figure 2 of AC 23.1309–1C/D, should also be in Appendix K. Neither Appendix K nor figure 2 of AC 23.1309–1E contained note 5 as AC 23.1309–1C/D did. Note 5 allows an additional reduction of Development Assurance Level (DAL) for Navigation, Communication, and Surveillance Systems if an altitude encoding altimeter transponder is installed and it provides the appropriate mitigations.

This note was deleted since it was misused, and it is not appropriate to use a transponder as mitigation. If the transponder is actually providing mitigations for failure conditions, then the note is unnecessary for the system assessment process. Note 5 is removed from AC 23.1309–1E and, as stated above, the proposal to codify Appendix K is withdrawn.

GE stated that the implementation of the four classes of airplanes, in Appendix K of the NPRM, has a sliding scale of acceptable risk/severity. That scale depends on airplane category, and it introduces inconsistency with other rules. GE believes this may lead to confusion of different numeric interpretations depending on the size of the airplane.

The FAA developed the four classes of airplanes in AC 23.1309–1C over 10 years ago for the implementation of modern avionics that provide safety benefits in part 23 airplanes. History has shown that developing the four classes improves safety, without confusion, due to the new features on electronic systems being installed. The aviation industry as a whole is on the threshold of a revolutionary change in communication, navigation, and surveillance of aircraft operations. The four-class certification criteria have

been shown to be beneficial for new technologies and affordable for General Aviation. The FAA considers the four-classes more appropriate for an advisory circular and has decided to retain the four classes of airplanes in AC 23.1309–1E and to remove Appendix K.

The FAA proposed revising § 23.1309(f) to make it compatible with the current § 23.1322 (''Warning, caution, and advisory lights''), which distinguishes between caution, warning, and advisory lights installed on the flight deck. Other paragraphs were deleted from this section, as mentioned earlier; therefore, § 23.1309(f) has been redesignated as § 23.1309(d). Rather than only providing a warning to the flight crew, which is required by the current rule, newly redesignated § 23.1309(d) requires that information concerning an unsafe system operating condition(s) be provided to the flight crew.

Section 23.1309(d) also specifies that the design of systems and controls, including indications and annunciations, must reduce crew errors that could create more hazards. The additional hazards to be minimized include those caused by inappropriate actions by a crewmember in response to the failure, or those that could occur after a failure.

The FAA proposed a new § 23.1310 that was previously part of § 23.1309. The proposed change would not have changed the current requirements; the only change would have been the new section designation.

In the past, § 23.1309 and § 25.1309 had the same power source requirements. Then, there was a proposal for part 25 to move these requirements from § 25.1309 to § 25.1310 without change. In Amendment 25–123 (72 FR 63405, November 8, 2007), the proposed requirements were changed for clarification without substantial changes to the requirements.

GAMA suggested a revision for clarification. Therefore, the FAA made a change to § 23.1310 in the final rule by adopting the requirements in § 25.1310. This will also provide consistency in our standards.

The FAA also proposed amendments for plain language purposes. Transport Canada stated the word ''instrument,'' which appears in several section titles in part 23, should be replaced with ''indications.'' The FAA disagrees and maintains that the use of the word ''instrument'' is clear and appropriate.

GAMA stated the requirements in § 23.1311(a)(5) should only be applicable when part 23 airplanes are operating in IFR conditions. GAMA also noted that some of the equipment listed, like attitude, is not required for Visual Flight Rules (VFR). The FAA agrees attitude instruments are not required for VFR operations under part 91.

The redundancy requirements for some flight instruments or indicators may be too restrictive for airplanes limited to VFR operations only. This has caused several applicants to request an ELOS from § 23.1311(a)(5) for installation approval of electronic displays in part 23 airplanes limited to VFR operations only. The FAA agrees with this comment since it would reduce the burden of processing multiple ELOS findings.

We proposed clarifying the requirements for ''sensory cues'' in § 23.1311(a)(6). We also proposed amending § 23.1311(a)(7) to make acceptable instrument markings on electronic displays equivalent to those instrument markings on conventional mechanical and electromechanical instruments. Several commenters suggested minor changes to the requirements for clarification. The FAA agrees with most of these changes and has made them in this final rule.

The FAA proposed amending § 23.1311(b) by replacing the phrase ''remain available to the crew, without need for immediate action'' with ''be available within one second to the crew by a single pilot action or by automatic means.'' This proposal would allow an applicant to take credit for reversionary or secondary flight displays on multi-function flight displays that provide a secondary means of primary flight information.

Embraer stated the one-second requirement in § 23.1311(b) should be limited to the display of attitude. The FAA disagrees but acknowledges that in most current certifications of part 23 airplanes, the attitude is the only information considered essential for continued safe flight and landing. The FAA does not want to limit the one-second requirement to only attitude. With the expansion of future advanced technologies, some airplanes may have other information essential for continued safe flight and landing.

GAMA, Cessna, and Garmin commented on making minor changes to proposed § 23.1311 for clarification. We incorporated most of these changes. Garmin suggested other minor recommendations to the NPRM. We also accepted most of these recommendations. They will be reflected in AC 23.1311–1C.

To meet the jet performance requirements in Subpart B, the pilot needs accurate speed indicators while accelerating on the runway. We proposed revisions to add the requirement to calibrate the airspeed system down to 0.8 of the minimum value of V_1. We also proposed the language used in part 25 for this same requirement because it is more in line with operating new part 23 jets.

Diamond asked why this requirement is specific to jets and commuter category aircraft. Additionally, Diamond found the wording used in proposed § 23.1323(e) confusing and suggested that it be reworded. If the intent is to keep this rule applicable to multiengine and commuter jets, then the commenter recommends removing the words normal, utility, and acrobatic (which represent the different categories of aircraft).

The requirement in the prior amendment for § 23.1323(e) was applicable to the commuter category because only those part 23 airplanes were required to be certificated for accelerate-stop testing. The proposed amendment changed § 23.55 to require accelerate-stop testing for multiengine jets weighing more than 6,000 pounds, as well as commuter category airplanes. A multiengine airplane can be commuter category, but it may also be in the normal, utility, or the acrobatic category. This final rule will clarify that all multiengine jets weighing more than 6,000 pounds are subject to accelerate-stop testing, regardless of category or whether it is a turboprop or jet. This final rule also adds the requirement to calibrate the airspeed system down to 0.8 of the minimum value of V_1.

Changes to pitot heat indication systems requirements in § 23.1326 were not included in the NPRM. Cessna stated that the previous rule required an amber light during startup and taxi when there was no safety issue. Since current annunciation systems provide the ability to change the annunciation of pitot heat during flight phases to amber, the rule should acknowledge the capability. Cessna suggested that the rule specify the following: ''If a flight instrument pitot heating system is installed to meet the requirements specified in § 23.1323(d), an indication system must be provided to indicate to the flight crew when that pitot heating system is not operating during takeoff or in flight.''

The FAA agrees, but the amber light must be operating except when the airplane is on the ground. However, since this comment is beyond the scope of the current rulemaking, the FAA did not include this change in the final rule.

The FAA further proposed to change requirements for instruments that use a power source. Proposed § 23.1331 would apply to instruments that rely on

a power source to provide required flight information for IFR operations. Independent power sources must be provided for these instruments or a separate display of the parameters that have a power source independent from the airplane's primary electrical power system. Embraer requested clarification of § 23.1331(c)(2) without substantial change to the requirements. The FAA agrees and made those changes in this final rule.

Cirrus stated that an additional heading display should not be required in § 23.1331(c)(2) for small general aviation aircraft since heading has a low safety criticality relative to altitude, attitude, and airspeed for this class of airplane. The FAA disagrees since an additional or separate display is not required if there are two independent power sources. Heading is an important parameter, and § 91.205 requires a stabilized heading source for IFR operations, in addition to the magnetic direction indicator.

Proposed amendments for storage battery design and installation in § 23.1353 would have added additional battery endurance requirements to enhance safety based on the airplane's altitude performance. The proposal addressed the power needs of new all-electrical instruments, navigation and communications equipment, and engine controls.

When those requirements were initially adopted, part 23 airplanes were mostly mechanical. All-electric, or almost all-electric airplanes were not envisioned. Previously, the FAA required 30 minutes of sufficient electrical power for a reduced or emergency group of equipment and instrumentation. The FAA considered 30 minutes adequate to reach VFR conditions to continue flying to an adequate airport and to accomplish a safe landing for traditional part 23 airplanes.

Integrated electrical cockpits were also not envisioned during initial development of those requirements. Currently, new part 23 airplanes are being certificated with all-electrical instruments, including the standby instruments. This reliance on electric power has increased the importance of ensuring adequate battery power until the pilot can descend and make a safe landing.

Most new turbine-powered airplanes, and some turbocharged, piston-powered airplanes, operate at high altitudes under IFR. Under these conditions, 30 minutes may not be adequate for battery power because it would take more time to descend from maximum altitude to find visual meteorological conditions (VMC) and land, or to perform an instrument approach for a landing. For these reasons, the proposed requirement would extend the battery time requirement to 60 minutes for approved airplanes with a maximum operating altitude above 25,000 feet. The 30 minute battery capacity was retained for airplanes with a maximum operating altitude of 25,000 feet or less.

We received five comments on this issue. Cessna, Diamond, and GAMA stated that the 60-minute battery capacity should not be required. They suggested a requirement to demonstrate descent and landing plus 10 minutes. Cirrus recommended a second energy source instead of a 60-minute battery. EASA suggested including the time to recognize the failure and take load shedding action, which was inadvertently omitted in the NPRM.

The FAA disagrees with the Cessna, Diamond, and GAMA's comments. While jets often have speed brakes and a high dive speed, the rule requires descent and landing. Jets also typically have high stall speeds, which may limit the number of airports where they can safely land, and off-airport landing capability is minimal. There are also piston-powered airplanes that operate above 25,000 feet with turbocharging, which do not have the dive speed and speed brakes often installed in jets. All of these airplanes can operate in IMC, which can delay the landing. Thus, the 60-minute battery capacity is valid for higher performance aircraft that operate above 25,000 feet.

The FAA also disagrees with Cirrus that a separate power source is superior to a 60-minute battery. Single- or dual-power sources are not causes for concern because the intent of § 23.1353(h) is to assume the loss of all generated power.

There was not a proposal in the NPRM to revise § 23.1431, electronic equipment, but editorial changes have become necessary since there were paragraph designation changes in § 23.1309.

We proposed changing requirements in § 23.1443 for minimum mass flow of supplemental oxygen. The FAA has addressed oxygen systems for airplanes operating above 41,000 feet using special conditions derived from part 25. A large number of new jets and high-performance airplanes applying for part 23 certification operate at higher altitudes than previously envisioned for part 23 airplanes. Proposed revisions would establish requirements for those oxygen systems. These proposed revisions would also eliminate the need for oxygen system special conditions for airplanes with maximum operating altitudes above 41,000 feet.

Cessna and EASA stated that the proposed rule conflicted with another rule for crew oxygen equipment since a continuous oxygen system is unacceptable for the crew at that altitude. The FAA agrees and has modified § 23.1443(a) to apply continuous flow oxygen systems only to passengers for operations above 41,000 feet as required by § 23.1441(d).

J. Placards, Operating Limitations, and Information

Proposed revisions to airspeed limitations in § 23.1505(c) would include jet-specific V-speeds. This proposal would base airspeed limits on a combination of analytical (V_D/M_D) and demonstrated (V_{DF}/M_{DF}) dive speeds for jets.

The FAA received one comment from EASA. EASA stated that it applies a special condition for high-speed characteristics not included in our proposal. Again, EASA's comment suggests performance-based standards. Amending part 23 to a performance-based standard is a substantially larger initiative than this rulemaking effort.

The FAA also proposed amendments that were clarifying in nature so applicants would understand that they may need additional equipment for their airplane(s) to conduct part 135 operations. Part 23 is a minimum-performance standard, and it may not include all the required equipment for operations under part 135. Proposed revisions to § 23.1525 would include parts 91 and 135 as potential kinds of authorized operation.

The FAA received comments from Transport Canada, Embraer, Cirrus, and Diamond. All four commenters stated that the operating rules should not be referenced in part 23. There was concern the proposed revisions could be misinterpreted and increase the certification burden to manufacturers. We do not intend to add any burden to manufacturers. We simply wanted to remind them that in many cases, part 135 operations require additional equipment not typically installed as standard equipment in part 23 airplanes. However, in light of those comments, this proposal is withdrawn.

The FAA proposed revising §§ 23.1583(c)(3), 23.1583(c)(4), and 23.1583(c)(5), operating limitations; § 23.1585(f), operating procedures; and § 23.1587(d) performance information by applying most commuter category performance requirements to jets weighing over 6,000 pounds. The proposed AFM requirements would maintain consistency with the

performance requirements proposed in Subpart B. These requirements include the single-engine climb performance increase for turboprops.

The FAA received three comments, one from EASA, Diamond, and Transport Canada. EASA states that it requires a special condition for landing distance factors not included in our proposal. This comment is outside the scope of this rulemaking effort. Diamond questioned the distinction between turbines and high-performance piston airplanes. The FAA agrees conceptually with these comments, but they are also beyond the scope of this rulemaking effort. Transport Canada stated that part 23 jets should include data for wet and contaminated runways. The upcoming part 23 regulatory review for future rulemaking will consider performance data.

K. Test Procedure and Appendices

The FAA proposed changing Appendix F, which is the test procedure for the requirement in § 23.856. GE asked if the test procedure was new. The test procedure is not new; Appendix F modifications made new part 23, Appendix F, part II, identical to part 25, Appendix F, part VI. GAMA questioned the use of a brand name in the discussion of Appendix F, Figure F1. In response, we reaffirm the use of the brand name as adopted from part 25, Appendix F. Again, our efforts toward standardization should be maintained wherever appropriate in our requirements. Appendix F is adopted as proposed.

III. Regulatory Analyses

Paperwork Reduction Act

The Paperwork Reduction Act of 1995 (44 U.S.C. 3507(d)) requires that the FAA consider the impact of paperwork and other information collection burdens imposed on the public. The FAA has determined that there is no new requirement for information collection associated with this final rule.

International Compatibility

In keeping with U.S. obligations under the Convention on International Civil Aviation, it is FAA policy to conform to International Civil Aviation Organization (ICAO) Standards and Recommended Practices to the maximum extent practicable. The FAA has reviewed the corresponding ICAO Standards and Recommended Practices and has identified no differences with these regulations.

Regulatory Evaluation, Regulatory Flexibility Determination, International Trade Impact Assessment, and Unfunded Mandates Assessment

Changes to Federal regulations must undergo several economic analyses. First, Executive Order 12866 directs that each Federal agency shall propose or adopt a regulation only upon a reasoned determination that the benefits of the intended regulation justify its costs. Second, the Regulatory Flexibility Act of 1980 (Pub. L. 96–354) requires agencies to analyze the economic impact of regulatory changes on small entities. Third, the Unfunded Mandates Reform Act of 1995 (Pub. L. 104–4) requires agencies to prepare a written assessment of the costs, benefits, and other effects of proposed or final rules that include a Federal mandate likely to result in the expenditure by State, local, or Tribal governments, in the aggregate, or by the private sector, of $100 million or more annually (adjusted for inflation with base year of 1995). This portion of the preamble summarizes the FAA's analysis of the economic impacts of this final rule. Readers seeking greater detail should read the full regulatory evaluation, a copy of which we have placed in the docket for this rulemaking.

In conducting these analyses, the FAA has determined that this final rule: (1) Has benefits that justify its costs, (2) is not an economically ''significant regulatory action'' as defined in section 3(f) of Executive Order 12866, (3) is ''significant'' as defined in DOT's Regulatory Policies and Procedures; (4) will not have a significant economic impact on a substantial number of small entities; (5) will not create unnecessary obstacles to the foreign commerce of the United States; and (6) will not impose an unfunded mandate on state, local, or Tribal governments, or on the private sector by exceeding the threshold identified above. These analyses are summarized below.

Total Benefits and Costs of This Rule

The estimated cost of this final rule ranges from a low of $65.2 million to a high of $72.9 million in nominal dollars ($22.9 million to $26.7 million at a seven percent present value).

The total benefits are equal to the sum of the safety and efficiency benefits. The estimated safety benefits of avoiding 26 accidents on newly certificated part 23 airplanes over the 57-year analysis interval are estimated at about $187.1 million in nominal dollars ($46.5 million at a seven percent present value).

The estimated efficiency benefits to streamline the part 23 certification process are valued at about $965 thousand, in nominal dollars, for five special conditions per aircraft certification, to about $1.5 million, in nominal dollars, for eight special conditions per aircraft certification. The total benefits range from a low of about $188.1 million to high of about $188.6 million in nominal dollars. The following table shows these results.

Final Rule Benefits and Costs ($M)			
	Nominal	3% P.V.	7% P.V.
Benefits			
Low Case	$188.1	$89.1	$47.5
High Case	$188.6	$89.6	$48.1
Costs			
Low Case	$65.2	$38.3	$22.9
High Case	$72.9	$43.8	$26.7

Who is Potentially Affected by This Rule

This rulemaking will affect U.S. manufacturers and operators of part 23 turbojets, turboprops, and reciprocating engine airplanes.

Assumptions

This final rule makes the following assumptions:

- The base year is 2010;

• The average life of a U.S.-operated part 23 airplane is 32 years;
• The average part 23 airplane production life cycle is 25 years;
• The analysis period extends for 57 years (32 + 25); and
• The value of a fatality avoided is $6.0 million.

Benefits of This Rule

The FAA estimates the final rule will avoid 26 accidents over the 32-year operating life of 29,725 newly certificated and delivered part 23 airplanes. The resulting benefits include standardizing and streamlining the certification process, averted fatalities and injuries, loss of airplanes, investigation cost, and collateral damages for the accidents.

The safety benefits for averting the 26 accidents are about $187.1 million in nominal dollars ($46.5 million at a seven percent present value). Other benefits of this final rule include FAA and industry paperwork and certification time saved by standardizing and streamlining the certification of part 23 airplanes. These efficiency benefits for standardizing and streamlining the certification process range from a low estimate of about $965 thousand to a high estimate of $1.5 million in nominal dollars.

The total benefits are equal to the sum of the safety and efficiency benefits and range from a low of about $188.1 million to high of about $188.6 million in nominal dollars.

Costs of This Rule

Estimated nominal dollar unit costs per part 23 airplane could be as high as: $1,009 for reciprocating engine airplanes, $6,105 for turboprops, and $8,053 for turbojets. Total incremental costs equal the nominal dollar unit costs multiplied by the number of newly certificated airplanes produced and delivered over the analysis interval. The estimated cost of this final rule ranges from a low of $65.2 million to high of $72.9 million in nominal dollars ($22.9 million to $26.7 at a seven percent present value).

Alternatives Considered

• Alternative 1—The FAA would continue to issue special exemptions, exceptions and equivalent levels of safety to certificate part 23 airplanes. As that would perpetuate ''rulemaking by exemption,'' we choose not to continue with the status quo; and
• Alternative 2—The FAA would continue to enforce the current regulations that affect single-engine climb performance and power loss. The FAA rejected this alternative because the accident rate for part 23 airplanes identified a safety issue that had to be addressed.

Regulatory Flexibility Determination

The Regulatory Flexibility Act of 1980 (Pub. L. 96–354) (RFA) establishes ''as a principle of regulatory issuance that agencies shall endeavor, consistent with the objectives of the rule and of applicable statutes, to fit regulatory and informational requirements to the scale of the businesses, organizations, and governmental jurisdictions subject to regulation. To achieve this principle, agencies are required to solicit and consider flexible regulatory proposals and to explain the rationale for their actions to assure that such proposals are given serious consideration.'' The RFA covers a wide range of small entities, including small businesses, not-for-profit organizations, and small governmental jurisdictions.

Agencies must perform a review to determine whether a rule will have a significant economic impact on a substantial number of small entities. If the agency determines that it will, the agency must prepare a regulatory flexibility analysis as described in the RFA.

However, if an agency determines that a rule is not expected to have a significant economic impact on a substantial number of small entities, Section 605(b) of the RFA provides that the head of the agency may so certify and a regulatory flexibility analysis is not required. The certification must include a statement providing the factual basis for this determination, and the reasoning should be clear.

The FAA has determined that this final rule will not have a significant impact on a substantial number of small entities. The purpose of this analysis is to provide the reasoning underlying the FAA's determination.

The FAA made the same determination that this proposal would not have a significant impact on a substantial number of small entities in the notice of proposed rulemaking (NPRM). The only comment regarding small entities for the NPRM was Sino Swearingen, who requested we note that it is now Emivest Aerospace, which is foreign owned.

First, we will discuss the reasons why the FAA is considering this action. We will follow with a discussion of the objective of, and legal basis for, the rule. Next we explain there are no relevant federal rules which may overlap, duplicate, or conflict with the final rule. Lastly, we will describe and provide an estimate of the number of small entities affected by the final rule and why the FAA believes this final rule will not result in a significant economic impact on a substantial number of small entities.

We now discuss the reasons why the FAA is considering this action.

The FAA proposed this action to amend safety and applicability standards for part 23 turbojets to reflect the current needs of the industry, accommodate future trends, address emerging technologies, and provide for future aircraft operations. This final rule primarily standardizes and streamlines the certification of part 23 turbojets. The changes to part 23 are necessary to eliminate the current workload of exemptions, special conditions, and equivalent levels of safety necessary to certificate part 23 turbojets. These part 23 changes will also clarify areas of frequent non-standardization and misinterpretation and provide appropriate safety and applicability standards that reflect the current state of the industry, emerging technologies and new types of operations for all part 23 airplanes, including turbojets, turboprops, and reciprocating engine airplanes.

The FAA currently issues type certificates (TCs) for part 23 turbojets using extensive special conditions. Issuance of TCs has not been significant until now because there were few part 23 turbojet certification programs. However, in the past seven years, the number of new part 23 turbojet certification programs has increased by more than 100 percent when compared to over the past three decades.

The need to incorporate these special conditions into part 23 stems from both the existing number of new turbojet certification programs and the expected number of future turbojet programs. Codifying these special conditions will allow manufacturers to know the requirements during the design phase instead of designing the turbojet and then having to apply for special conditions that may ultimately require a redesign. Codifying will also reduce the manufacturers and FAA's paper process required to type certificate an airplane and reduces the potential for program delays. These final rule changes will also clarify areas of frequent non-standardization and misinterpretation, particularly for electronic equipment and system certification on all newly certificated part 23 airplanes.

The revisions include general definitions, error corrections, and specific requirements for performance and handling characteristics to ensure safe operation of part 23 airplanes. The revisions will apply to all future new part 23 turbojets, turboprops, and

reciprocating engine airplane certifications.

We now discuss the legal basis for, and objective of, the rule. Next, we discuss if there are relevant federal rules that may overlap, duplicate, or conflict with the rule.

The FAA's authority to issue rules on aviation safety is found in Title 49 of the United States Code. Subtitle I, Section 106 describes the authority of the FAA Administrator. Subtitle VII, Aviation Programs, describes in more detail the scope of the agency's authority.

This rulemaking is promulgated under the authority described in Subtitle VII, Part A, Subpart III, Section 44701. Under that section, the FAA is charged with promoting safe flight of civil aircraft in air commerce by prescribing minimum standards required in the interest of safety for the design and performance of aircraft. This regulation is within the scope of that authority because it prescribes new safety standards for the design of part 23 normal, utility, acrobatic, and commuter category airplanes.

Accordingly, this final rule will amend Title 14, the Code of Federal Regulations to address deficiencies in current regulations regarding the certification of part 23 light turbojets, turboprops and reciprocating engine airplanes. The final rule will also clarify areas of frequent non-standardization and misinterpretation and codify certification requirements that currently exist in special conditions.

The rule will not overlap, duplicate, or conflict with existing federal rules.

We now discuss our methodology to determine the number of small entities for which the rule will apply.

Under the RFA, the FAA must determine whether a proposed or final rule significantly affects a substantial number of small entities. This determination is typically based on small entity size and cost thresholds that vary depending on the affected industry.

Using the size standards from the Small Business Administration for Air Transportation and Aircraft Manufacturing, we defined companies as small entities if they have fewer than 1,500 employees.[2]

There are nine U.S.-owned aircraft manufacturers who deliver part 23 airplanes in the 1998–2009 analysis interval. These manufacturers are American Champion, Cessna, Cirrus, Hawker Beechcraft, Liberty, Maule, Mooney, Piper, and Quest.

Using information provided by the World Aviation Directory, Internet filings and industry contacts, manufacturers that are subsidiary businesses of larger businesses, manufacturers that are foreign owned, and businesses with more than 1,500 employees were eliminated from the list of small entities. Cessna and Hawker Beechcraft are businesses with more than 1,500 employees and Cirrus and Liberty are foreign owned. We found no source of employment or revenue data for American Champion. For the remaining businesses, we obtained company revenue and employment from the above sources.

The base year for the final rule is 2010. Although the FAA forecasts traffic and air carrier fleets, we cannot determine the number of new entrants, nor who will be in the part 23 aircraft manufacturing business in the future. Therefore we use current U.S. part 23 aircraft manufacturers' revenue and employment in order to determine the number of operators this final rule will affect.

The methodology discussed above resulted in the following list of four U.S. part 23 aircraft manufactures, with less than 1,500 employees.

Table RF1

Company	Employees	Annual Revenue
Quest	60	$8,200,000
Maule	86	$5,700,000
Piper	100	$83,200,000
Mooney	400	$42,083,000

From the list of small entity U.S. airplane manufacturers above, there are no manufacturers currently producing part 23 turbojets; only Piper and Quest produce turboprops. The remaining small entity U.S. aircraft manufacturers produce part 23 reciprocating engine airplanes.

The U.S. Census Bureau data on the Small Business Administration's Web site shows an estimate of the total number of small entities who could be affected if they purchase newly certificated part 23 airplanes. The U.S. Census Bureau data lists 39,754 small entities in the Non-scheduled Air Transportation Industry that employ less than 500 employees. Many of these non-scheduled businesses are subject to part 25. Other small businesses may own aircraft and not be included in the U.S. Census Bureau Non-scheduled Air Transportation Industry category.[3] Therefore, we will use the list of small entities from Table RF1 instead of the U.S. Census Bureau data for our Final Regulatory Flexibility Act (FRFA) analysis.

We will now develop the estimate of the effect of this final rule on the total number of small entities that manufacture part 23 airplanes.

First, we discuss our methodology to estimate the costs of the final rule to the small entity part 23 airplane manufacturers and operators. Next, we will discuss why the FAA believes the final rule will not result in a significant economic impact to part 23 airplane manufacturers and operators.

In 2003, we published a notice (68 FR 5488) creating the part 125/135 Aviation Rulemaking Committee (ARC). The FAA and the part 23 industry have worked together to develop common part 23 airplane certification requirements for this rulemaking. We contacted the part 23 aircraft manufacturers, the ARC, and GAMA (an industry association for part 23 aircraft manufacturers) for specific cost estimates for each section change for the final rule. Not every party we contacted responded to our request for costs. Many of the ARC members, from the domestic and international manufacturing community, collaborated and filed a joint cost estimate for the proposed rule.

We are basing our cost estimates for this final rule from data provided by the domestic part 23 U.S. aircraft manufacturers, ARC members, and GAMA. They informed us that the final

[2] 13 CFR 121.201, Size Standards Used to Define Small Business Concerns, Sector 48–49 Transportation, Subsector 481 Air Transportation.

[3] *http://www.sba.gov/advo/research/us05_n6.pdf.*

rule will add costs for fire extinguishing systems, climb, take-off warning systems, ventilation systems, system designs, and batteries. Industry informed us that this proposal will save the manufacturers design time for the certification of cockpit controls. Industry has also informed us that every other section of this final rule is either clarifying, error correcting, or will only add minimal to no costs.

The final rule adds certification requirements for the following part 23 airplane categories:

1. Turbojets;
2. Turbojets with a MTOW less than 6,000 pounds;
3. Turboprops;
4. Turboprops with a MTOW less than 6,000 pounds;
5. Reciprocating engine airplanes; and
6. Reciprocating engine airplanes with a MTOW greater than 6,000 pounds.

In some cases the final rule will only affect part 23 airplanes operated in revenue service. Any part 23 airplane could be used as a business airplane to haul passengers and cargo in commercial service. We estimated the business versus the personal use of a part 23 airplane by analyzing the number of all U.S.-operated airplanes from Table 3.1 of the *2008 General Aviation and Part 135 Activity Survey.*

Table 3.1 of that survey shows the breakout of the 2008 General Aviation fleet by business, corporate, instructional, aerial applications, aerial observations, aerial other, external load, other work, sight see, air medical, other, part 135 Air Taxi, Air Tours, and Air Medical airplane usage. For the purpose of estimating the cost of this proposal, we assume all-business part 23 airplane operators from Table 3.1 of the *2008 General Aviation and Part 135 Activity Survey* will operate in commuter service.

Table RF2 shows these results:

Table RF2				
2008 General Aviation and Part 135 Activity Survey - Table 3.1				
Aircraft Type	Total Active	Personal	% Personal	% Business
Piston	163,013	118,929	72.96%	27.04%
Turboprop	8,906	1,354	15.20%	84.80%
Turbojet	11,042	1,030	9.33%	90.67%

Table RF3 shows the final rule sections that add (or subtract) incremental costs by increasing design or flight testing times, adding weight, adding batteries, or reducing payload:

Table RF3										
	Certification		Flight Operation		Part 23 Airplane Groups Affected					
Part 23 Section	Design Hours or Costs	Flight Test Hours	Additional Weight or Costs	Payload Reduction	Turbojet	Turbojet < 6,000k MTOW	Turboprop	Turboprop < 6,000k MTOW	Reciprocal Engine	Reciprocal Engine > 6,000 # MTOW
23.1193(g), 23.1195(a), 23.1197, 23.1199, 23.1201		50	25#				X			
23.63 23.67 23.77				10%		X		X		X
23.703	1,000	25				X	X			X
23.777	-25				X		X		X	
23.831	$300,000		7#		X					
23.1309(a)(3)	550				X		X		X	
23.1353		$1,000 & 30#			X		X		X	

We estimated part 23 airplane fixed manufacturer (added certification plus flight test hours) and operator-variable flight operation (added weight, batteries, or a reduction in payload) costs and applied our estimated costs to the expected fleet delivered in compliance with this final rule. The total cost of this final rule is the sum of the fixed certification cost plus the variable flight operation cost multiplied by the expected newly certificated part 23 fleet delivered over the analysis interval.

The total fixed certification compliance cost equals the industry-provided incremental hours or dollar costs multiplied by the expected number of new certifications for part 23 turbojets, turboprops, and reciprocating engine airplanes.

The total variable flight operation compliance cost equals the industry-provided incremental weight, payload reduction, or dollar costs multiplied by the expected number of newly certificated part 23 turbojets, turboprops, and reciprocating engine airplanes delivered. In the regulatory analysis, we estimated a low case and a high case cost range for the fixed operation compliance costs. The range was based on the 10% loss in payload capacity noted in Table RF3.

In the low case, we estimated no loss in capacity because our analysis showed that part 23 airplanes operate well below the airplane's payload capacity. In the high case, we estimated a cost to operators for the 10% loss in payload capacity. We will use the high-variable, flight operation cost scenario for this FRFA analysis.

We estimated the nominal dollar unit costs for all part 23 airplanes by summing the fixed certification costs

with the variable flight operations compliance costs by part 23 turbojets, turboprops, and reciprocating engine airplanes. Next, we divided these sums by the number of newly certificated delivered part 23 turbojets, turboprops, and reciprocating engine airplanes. Our calculations yielded that unit costs could be as high as $1,009 for newly certificated reciprocating engine airplanes and $6,105 for turboprop airplanes.

We then took the product of the estimated unit airplane cost with the average annual number of part 23 turbojets, turboprops, and reciprocating engine airplanes that each of the four small business part 23 manufacturers (from Table RF1) delivered from 1998 to 2009. This product determined the annual impact of the final rule to each small business part 23 manufacturer. Lastly, we divided each small part 23 airplane manufacturer's annual revenue by the incremental costs.

Table RF4 shows these results:

Table RF4

Company	Annual Revenue	Unit Costs	Average Annual Airplanes Delivered	Airplane Group Manufactured	Estimated Cert Cost	Percent
Quest	$8,200,000	$6,105	11	Turboprop	$67,155	0.82%
Maule	$5,700,000	$1,009	28	Recip	$28,252	0.50%
Piper	$83,200,000	$1,009(Recip) / $6,105(TP)	235(Recip) / 35(TP)	Recip + Turboprop	$450,790	0.54%
Mooney	$42,083,000	$1,009	52	Recip	$52,468	0.12%

We do not believe that these final rule costs will be a significant impact to small entity operators because, even for the high-cost case, the compliance costs of this proposal to operators would only be less than one percent of annual revenue for each of the small business part 23 manufacturers. Again, the only comment regarding small entities for the NPRM was the noted comment from Sino Swearingen.

Therefore, as the FAA Administrator, I certify that this final rule will not have a significant economic impact on a substantial number of small entities.

International Trade Impact Assessment

The Trade Agreements Act of 1979 (Pub. L. 96–39), as amended by the Uruguay Round Agreements Act (Pub. L. 103–465), prohibits Federal agencies from establishing standards or engaging in related activities that create unnecessary obstacles to the foreign commerce of the United States. Pursuant to these Acts, the establishment of standards is not considered an unnecessary obstacle to the foreign commerce of the United States, so long as the standard has a legitimate domestic objective, such as the protection of safety, and does not operate in a manner that excludes imports that meet this objective. The statute also requires consideration of international standards and, where appropriate, that they be the basis for U.S. standards.

The FAA has assessed the potential effect of this final rule and determined that the standards are necessary for aviation safety and will not create unnecessary obstacles to the foreign commerce of the United States.

Unfunded Mandates Assessment

Title II of the Unfunded Mandates Reform Act of 1995 (Pub. L. 104–4) requires each Federal agency to prepare a written statement assessing the effects of any Federal mandate in a proposed or final agency rule that may result in an expenditure of $100 million or more (in 1995 dollars) in any one year by State, local, and Tribal governments, in the aggregate, or by the private sector; such a mandate is deemed to be a ''significant regulatory action.''

The FAA currently uses an inflation-adjusted value of $140.8 million in lieu of $100 million. This final rule does not contain such a mandate; therefore, the requirements of Title II of the Act do not apply.

Executive Order 13132, Federalism

The FAA has analyzed this final rule under the principles and criteria of Executive Order 13132, Federalism. We determined that this action will not have a substantial direct effect on the States, or the relationship between the Federal Government and the States, or on the distribution of power and responsibilities among the various levels of government; therefore, it does not have federalism implications.

Regulations Affecting Intrastate Aviation in Alaska

Section 1205 of the FAA Reauthorization Act of 1996 (110 Stat. 3213) requires the FAA, when modifying its regulations in a manner affecting intrastate aviation in Alaska, to consider the extent to which Alaska is not served by transportation modes other than aviation, and to establish appropriate regulatory distinctions. In the NPRM, we requested comments on whether the proposed rule should apply differently to intrastate operations in Alaska. We did not receive any comments. We have determined, based on the administrative record of this rulemaking, that there is no need to make any regulatory distinctions applicable to intrastate aviation in Alaska.

Environmental Analysis

FAA Order 1050.1E identifies FAA actions that are categorically excluded from preparation of an environmental assessment or environmental impact statement under the National Environmental Policy Act in the absence of extraordinary circumstances. The FAA has determined this rulemaking action qualifies for the categorical exclusion identified in paragraph 312(f) and involves no extraordinary circumstances.

Regulations That Significantly Affect Energy Supply, Distribution, or Use

The FAA analyzed this final rule under Executive Order 13211, Actions Concerning Regulations that Significantly Affect Energy Supply, Distribution, or Use (May 18, 2001). We have determined that it is not a ''significant energy action'' under the executive order because it is not a ''significant regulatory action,'' and it is not likely to have a significant adverse effect on the supply, distribution, or use of energy.

Availability of Rulemaking Documents

You can get an electronic copy of rulemaking documents using the Internet by—

1. Searching the Federal eRulemaking Portal (*http://www.regulations.gov*);
2. Visiting the FAA's Regulations and Policies Web page at *http://www.faa.gov/regulations_policies/* or
3. Accessing the Government Printing Office's Web page at *http://www.gpoaccess.gov/fr/index.html.*

You can also get a copy by sending a request to the Federal Aviation Administration, Office of Rulemaking,

ARM–1, 800 Independence Avenue SW., Washington, DC 20591, or by calling (202) 267–9680. Make sure to identify the notice, amendment, or docket number of this rulemaking.

Anyone is able to search the electronic form of all comments received into any of our dockets by the name of the individual submitting the comment (or by signing the comment, if submitted on behalf of an association, business, labor union, *etc.*). You may review DOT's complete Privacy Act statement in the **Federal Register** published on April 11, 2000 (Volume 65, Number 70; Pages 19477–78) or you may visit *http://DocketsInfo.dot.gov.*

Small Business Regulatory Enforcement Fairness Act

The Small Business Regulatory Enforcement Fairness Act (SBREFA) of 1996 requires FAA to comply with small entity requests for information or advice about compliance with statutes and regulations within its jurisdiction. If you are a small entity and you have a question regarding this document, you may contact your local FAA official, or the person listed under the **FOR FURTHER INFORMATION CONTACT** heading at the beginning of the preamble. You can find out more about SBREFA on the Internet at *http://www.faa.gov/regulations_policies/rulemaking/sbre_act/.*

List of Subjects in 14 CFR Part 23

Aviation safety, Signs, Symbols, Aircraft.

The Amendments

In consideration of the foregoing, the Federal Aviation Administration amends Chapter I of Title 14, Code of Federal Regulations, as follows:

PART 23—AIRWORTHINESS STANDARDS; NORMAL, UTILITY, ACROBATIC, AND COMMUTER CATEGORY AIRPLANES

■ 1. The authority citation for part 23 continues to read as follows:

Authority: 49 U.S.C. 106(G), 40113, 44701–44702, 44704.

■ 2. Amend § 23.3 by revising the first sentence in paragraph (d) to read as follows:

§ 23.3 Airplane categories.

* * * * *

(d) The commuter category is limited to multiengine airplanes that have a seating configuration, excluding pilot seats, of 19 or less, and a maximum certificated takeoff weight of 19,000 pounds or less. * * *

* * * * *

■ 3. Amend § 23.45 by revising the introductory text of paragraph (h) to read as follows:

§ 23.45 General.

* * * * *

(h) For multiengine jets weighing over 6,000 pounds in the normal, utility, and acrobatic category and commuter category airplanes, the following also apply:

* * * * *

■ 4. Amend § 23.49 by revising the section heading and the introductory text of paragraphs (a) and (c) to read as follows:

§ 23.49 Stalling speed.

(a) V_{SO} (maximum landing flap configuration) and V_{S1} are the stalling speeds or the minimum steady flight speeds, in knots (CAS), at which the airplane is controllable with—

* * * * *

(c) Except as provided in paragraph (d) of this section, V_{SO} at maximum weight may not exceed 61 knots for—

* * * * *

■ 5. Amend § 23.51 by revising paragraph (b)(1) introductory text and paragraph (c) introductory text to read as follows:

§ 23.51 Takeoff speeds.

* * * * *

(b) * * *

(1) For multiengine airplanes, the highest of—

* * * * *

(c) For normal, utility, and acrobatic category multiengine jets of more than 6,000 pounds maximum weight and commuter category airplanes, the following apply:

* * * * *

■ 6. Amend § 23.53 by revising paragraph (c) to read as follows:

§ 23.53 Takeoff performance.

* * * * *

(c) For normal, utility, and acrobatic category multiengine jets of more than 6,000 pounds maximum weight and commuter category airplanes, takeoff performance, as required by §§ 23.55 through 23.59, must be determined with the operating engine(s) within approved operating limitations.

■ 7. Amend § 23.55 by revising the introductory text to read as follows:

§ 23.55 Accelerate-stop distance.

For normal, utility, and acrobatic category multiengine jets of more than 6,000 pounds maximum weight and commuter category airplanes, the accelerate-stop distance must be determined as follows:

* * * * *

■ 8. Amend § 23.57 by revising the introductory text to read as follows:

§ 23.57 Takeoff path.

For normal, utility, and acrobatic category multiengine jets of more than 6,000 pounds maximum weight and commuter category airplanes, the takeoff path is as follows:

* * * * *

■ 9. Amend § 23.59 by revising the introductory text to read as follows:

§ 23.59 Takeoff distance and takeoff run.

For normal, utility, and acrobatic category multiengine jets of more than 6,000 pounds maximum weight and commuter category airplanes, the takeoff distance and, at the option of the applicant, the takeoff run, must be determined.

* * * * *

■ 10. Amend § 23.61 by revising the introductory text to read as follows:

§ 23.61 Takeoff flight path.

For normal, utility, and acrobatic category multiengine jets of more than 6,000 pounds maximum weight and commuter category airplanes, the takeoff flight path must be determined as follows:

* * * * *

■ 11. Amend § 23.63 by revising the introductory text of paragraphs (c) and (d) to read as follows:

§ 23.63 Climb: General.

* * * * *

(c) For reciprocating engine-powered airplanes of more than 6,000 pounds maximum weight, single-engine turbines, and multiengine turbine airplanes of 6,000 pounds or less maximum weight in the normal, utility, and acrobatic category, compliance must be shown at weights as a function of airport altitude and ambient temperature, within the operational limits established for takeoff and landing, respectively, with—

* * * * *

(d) For multiengine turbine airplanes over 6,000 pounds maximum weight in the normal, utility, and acrobatic category and commuter category airplanes, compliance must be shown at weights as a function of airport altitude and ambient temperature within the operational limits established for takeoff and landing, respectively, with—

* * * * *

■ 12. Amend § 23.65 by revising paragraph (b) to read as follows:

§ 23.65 Climb: All engines operating.

* * * * *

(b) Each normal, utility, and acrobatic category reciprocating engine-powered airplane of more than 6,000 pounds maximum weight, single-engine turbine, and multiengine turbine airplanes of 6,000 pounds or less maximum weight in the normal, utility, and acrobatic category must have a steady gradient of climb after takeoff of at least 4 percent with

* * * * *

■ 13. Amend § 23.67 by revising paragraph (b) introductory text and (b)(1) introductory text, redesignating paragraph (c) as paragraph (d), revising newly redesignated paragraph (d) introductory text, and adding new paragraph (c) to read as follows:

§ 23.67 Climb: One-engine inoperative.

* * * * *

(b) For normal, utility, and acrobatic category reciprocating engine-powered airplanes of more than 6,000 pounds maximum weight, and turbopropeller-powered airplanes in the normal, utility, and acrobatic category—

(1) The steady gradient of climb at an altitude of 400 feet above the takeoff must be no less than 1 percent with the—

* * * * *

(c) For normal, utility, and acrobatic category jets of 6,000 pounds or less maximum weight—

(1) The steady gradient of climb at an altitude of 400 feet above the takeoff must be no less than 1.2 percent with the—

(i) Critical engine inoperative;

(ii) Remaining engine(s) at takeoff power;

(iii) Landing gear retracted;

(iv) Wing flaps in the takeoff position(s); and

(v) Climb speed equal to that achieved at 50 feet in the demonstration of § 23.53.

(2) The steady gradient of climb may not be less than 0.75 percent at an altitude of 1,500 feet above the takeoff surface, or landing surface, as appropriate, with the—

(i) Critical engine inoperative;

(ii) Remaining engine(s) at not more than maximum continuous power;

(iii) Landing gear retracted;

(iv) Wing flaps retracted; and

(v) Climb speed not less than 1.2 V_{S1}.

(d) For jets over 6,000 pounds maximum weight in the normal, utility and acrobatic category and commuter category airplanes, the following apply:

* * * * *

■ 14. Revise § 23.73 to read as follows:

§ 23.73 Reference landing approach speed.

(a) For normal, utility, and acrobatic category reciprocating engine-powered airplanes of 6,000 pounds or less maximum weight, the reference landing approach speed, V_{REF}, may not be less than the greater of V_{MC}, determined in § 23.149(b) with the wing flaps in the most extended takeoff position, and 1.3 V_{S1}.

(b) For normal, utility, and acrobatic category turbine powered airplanes of 6,000 pounds or less maximum weight, turboprops of more than 6,000 pounds maximum weight, and reciprocating engine-powered airplanes of more than 6,000 pounds maximum weight, the reference landing approach speed, V_{REF}, may not be less than the greater of V_{MC}, determined in § 23.149(c), and 1.3 V_{S1}.

(c) For normal, utility, and acrobatic category jets of more than 6,000 pounds maximum weight and commuter category airplanes, the reference landing approach speed, V_{REF}, may not be less than the greater of 1.05 V_{MC}, determined in § 23.149(c), and 1.3 V_{S1}.

■ 15. Amend § 23.77 by revising the introductory text of paragraphs (b) and (c) to read as follows:

§ 23.77 Balked landing.

* * * * *

(b) Each normal, utility, and acrobatic category reciprocating engine-powered and single engine turbine powered airplane of more than 6,000 pounds maximum weight, and multiengine turbine engine-powered airplane of 6,000 pounds or less maximum weight in the normal, utility, and acrobatic category must be able to maintain a steady gradient of climb of at least 2.5 percent with—

* * * * *

(c) Each normal, utility, and acrobatic multiengine turbine powered airplane over 6,000 pounds maximum weight and each commuter category airplane must be able to maintain a steady gradient of climb of at least 3.2 percent with—

* * * * *

■ 16. Amend § 23.177 by revising paragraphs (a), (b), and (d) to read as follows:

§ 23.177 Static directional and lateral stability.

(a)(1) The static directional stability, as shown by the tendency to recover from a wings level sideslip with the rudder free, must be positive for any landing gear and flap position appropriate to the takeoff, climb, cruise, approach, and landing configurations. This must be shown with symmetrical power up to maximum continuous power, and at speeds from 1.2 V_{S1} up to V_{FE}, V_{LE}, V_{NO}, V_{FC}/M_{FC}, whichever is appropriate.

(2) The angle of sideslip for these tests must be appropriate to the type of airplane. The rudder pedal force must not reverse at larger angles of sideslip, up to that at which full rudder is used or a control force limit in § 23.143 is reached, whichever occurs first, and at speeds from 1.2 V_{S1} to V_O.

(b)(1) The static lateral stability, as shown by the tendency to raise the low wing in a sideslip with the aileron controls free, may not be negative for any landing gear and flap position appropriate to the takeoff, climb, cruise, approach, and landing configurations. This must be shown with symmetrical power from idle up to 75 percent of maximum continuous power at speeds from 1.2 V_{S1} in the takeoff configuration(s) and at speeds from 1.3 V_{S1} in other configurations, up to the maximum allowable airspeed for the configuration being investigated (V_{FE}, V_{LE}, V_{NO}, V_{FC}/M_{FC}, whichever is appropriate) in the takeoff, climb, cruise, descent, and approach configurations. For the landing configuration, the power must be that necessary to maintain a 3-degree angle of descent in coordinated flight.

(2) The static lateral stability may not be negative at 1.2 V_{S1} in the takeoff configuration, or at 1.3 V_{S1} in other configurations.

(3) The angel of sideslip for these tests must be appropriate to the type of airplane, but in no case may the constant heading sideslip angle be less than that obtainable with a 10 degree bank or, if less, the maximum bank angle obtainable with full rudder deflection or 150 pound rudder force.

* * * * *

(d)(1) In straight, steady slips at 1.2 V_{S1} for any landing gear and flap position appropriate to the takeoff, climb, cruise, approach, and landing configurations, and for any symmetrical power conditions up to 50 percent of maximum continuous power, the aileron and rudder control movements and forces must increase steadily, but not necessarily in constant proportion, as the angle of sideslip is increased up to the maximum appropriate to the type of airplane.

(2) At larger slip angles, up to the angle at which the full rudder or aileron control is used or a control force limit contained in § 23.143 is reached, the aileron and rudder control movements and forces may not reverse as the angle of sideslip is increased.

(3) Rapid entry into, and recovery from, a maximum sideslip considered

appropriate for the airplane may not result in uncontrollable flight characteristics.

■ 17. Amend § 23.181 by revising paragraph (b) to read as follows:

§ 23.181 Dynamic stability.

* * * * *

(b) Any combined lateral-directional oscillations (Dutch roll) occurring between the stalling speed and the maximum allowable speed (V_{FE}, V_{LE}, V_{N0}, V_{FC}/M_{FC}) appropriate to the configuration of the airplane with the primary controls in both free and fixed position, must be damped to 1/10 amplitude in:

(1) Seven (7) cycles below 18,000 feet and

(2) Thirteen (13) cycles from 18,000 feet to the certified maximum altitude.

* * * * *

■ 18. Amend § 23.201 by revising paragraph (d), by revising and redesignating current paragraph (e) as paragraph (f), and by adding a new paragraph (e) to read as follows:

§ 23.201 Wings level stall.

* * * * *

(d) During the entry into and the recovery from the maneuver, it must be possible to prevent more than 15 degrees of roll or yaw by the normal use of controls except as provided for in paragraph (e) of this section.

(e) For airplanes approved with a maximum operating altitude at or above 25,000 feet during the entry into and the recovery from stalls performed at or above 25,000 feet, it must be possible to prevent more than 25 degrees of roll or yaw by the normal use of controls.

(f) Compliance with the requirements of this section must be shown under the following conditions:

(1) *Wing flaps:* Retracted, fully extended, and each intermediate normal operating position, as appropriate for the phase of flight.

(2) *Landing gear:* Retracted and extended as appropriate for the altitude.

(3) *Cowl flaps:* Appropriate to configuration.

(4) *Spoilers/speedbrakes:* Retracted and extended unless they have no measureable effect at low speeds.

(5) *Power:*

(i) Power/Thrust off; and

(ii) For reciprocating engine powered airplanes: 75 percent of maximum continuous power. However, if the power-to-weight ratio at 75 percent of maximum continuous power results in nose-high attitudes exceeding 30 degrees, the test may be carried out with the power required for level flight in the landing configuration at maximum landing weight and a speed of 1.4 V_{SO}, except that the power may not be less than 50 percent of maximum continuous power; or

(iii) For turbine engine powered airplanes: The maximum engine thrust, except that it need not exceed the thrust necessary to maintain level flight at 1.5 V_{S1} (where V_{S1} corresponds to the stalling speed with flaps in the approach position, the landing gear retracted, and maximum landing weight).

(6) *Trim:* At 1.5 V_{S1} or the minimum trim speed, whichever is higher.

(7) *Propeller:* Full increase r.p.m. position for the power off condition.

■ 19. Amend § 23.203 by revising paragraph (c) to read as follows:

§ 23.203 Turning flight and accelerated turning stalls.

* * * * *

(c) Compliance with the requirements of this section must be shown under the following conditions:

(1) *Wings flaps:* Retracted, fully extended, and each intermediate normal operating position as appropriate for the phase of flight.

(2) *Landing gear:* Retracted and extended as appropriate for the altitude.

(3) *Cowl flaps:* Appropriate to configuration.

(4) *Spoilers/speedbrakes:* Retracted and extended unless they have no measureable effect at low speeds.

(5) *Power:*

(i) Power/Thrust off; and

(ii) For reciprocating engine powered airplanes: 75 percent of maximum continuous power. However, if the power-to-weight ratio at 75 percent of maximum continuous power results in nose-high attitudes exceeding 30 degrees, the test may be carried out with the power required for level flight in the landing configuration at maximum landing weight and a speed of 1.4 V_{SO}, except that the power may not be less than 50 percent of maximum continuous power; or

(iii) For turbine engine powered airplanes: The maximum engine thrust, except that it need not exceed the thrust necessary to maintain level flight at 1.5 V_{S1} (where V_{S1} corresponds to the stalling speed with flaps in the approach position, the landing gear retracted, and maximum landing weight).

(6) *Trim:* The airplane trimmed at 1.5 V_{S1}.

(7) *Propeller:* Full increase rpm position for the power off condition.

■ 20. Revise § 23.251 to read as follows:

§ 23.251 Vibration and buffeting.

(a) There must be no vibration or buffeting severe enough to result in structural damage, and each part of the airplane must be free from excessive vibration, under any appropriate speed and power conditions up to V_D/M_D, or V_{DF}/M_{DF} for turbojets. In addition, there must be no buffeting in any normal flight condition, including configuration changes during cruise, severe enough to interfere with the satisfactory control of the airplane or cause excessive fatigue to the flight crew. Stall warning buffeting within these limits is allowable.

(b) There must be no perceptible buffeting condition in the cruise configuration in straight flight at any speed up to V_{MO}/M_{MO}, except stall buffeting, which is allowable.

(c) For airplanes with M_D greater than M 0.6 or a maximum operating altitude greater than 25,000 feet, the positive maneuvering load factors at which the onset of perceptible buffeting occurs must be determined with the airplane in the cruise configuration for the ranges of airspeed or Mach number, weight, and altitude for which the airplane is to be certificated. The envelopes of load factor, speed, altitude, and weight must provide a sufficient range of speeds and load factors for normal operations. Probable inadvertent excursions beyond the boundaries of the buffet onset envelopes may not result in unsafe conditions.

■ 21. Amend § 23.253 by revising paragraphs (b)(1) and (b)(2), and by adding new paragraphs (b)(3) and (d) to read as follows:

§ 23.253 High speed characteristics.

* * * * *

(b) * * *

(1) Exceptional piloting strength or skill;

(2) Exceeding V_D/M_D, or V_{DF}/M_{DF} for turbojets, the maximum speed shown under § 23.251, or the structural limitations; and

(3) Buffeting that would impair the pilot's ability to read the instruments or to control the airplane for recovery.

* * * * *

(d) *Maximum speed for stability characteristics, V_{FC}/M_{FC}.* V_{FC}/M_{FC} may not be less than a speed midway between V_{MO}/M_{MO} and V_{DF}/M_{DF} except that, for altitudes where Mach number is the limiting factor, M_{FC} need not exceed the Mach number at which effective speed warning occurs.

■ 22. Section 23.255 is added to subpart B to read as follows:

§ 23.255 Out of trim characteristics.

For airplanes with an M_D greater than M 0.6 and that incorporate a trimmable horizontal stabilizer, the following

requirements for out-of-trim characteristics apply:

(a) From an initial condition with the airplane trimmed at cruise speeds up to V_{MO}/M_{MO}, the airplane must have satisfactory maneuvering stability and controllability with the degree of out-of-trim in both the airplane nose-up and nose-down directions, which results from the greater of the following:

(1) A three-second movement of the longitudinal trim system at its normal rate for the particular flight condition with no aerodynamic load (or an equivalent degree of trim for airplanes that do not have a power-operated trim system), except as limited by stops in the trim system, including those required by § 23.655(b) for adjustable stabilizers; or

(2) The maximum mistrim that can be sustained by the autopilot while maintaining level flight in the high speed cruising condition.

(b) In the out-of-trim condition specified in paragraph (a) of this section, when the normal acceleration is varied from +l g to the positive and negative values specified in paragraph (c) of this section, the following apply:

(1) The stick force versus g curve must have a positive slope at any speed up to and including V_{FC}/M_{FC}; and

(2) At speeds between V_{FC}/M_{FC} and V_{DF}/M_{DF}, the direction of the primary longitudinal control force may not reverse.

(c) Except as provided in paragraphs (d) and (e) of this section, compliance with the provisions of paragraph (a) of this section must be demonstrated in flight over the acceleration range as follows:

(1) −1 g to +2.5 g; or

(2) 0 g to 2.0 g, and extrapolating by an acceptable method to −1 g and +2.5 g.

(d) If the procedure set forth in paragraph (c)(2) of this section is used to demonstrate compliance and marginal conditions exist during flight test with regard to reversal of primary longitudinal control force, flight tests must be accomplished from the normal acceleration at which a marginal condition is found to exist to the applicable limit specified in paragraph (b)(1) of this section.

(e) During flight tests required by paragraph (a) of this section, the limit maneuvering load factors, prescribed in §§ 23.333(b) and 23.337, need not be exceeded. In addition, the entry speeds for flight test demonstrations at normal acceleration values less than 1 g must be limited to the extent necessary to accomplish a recovery without exceeding V_{DF}/M_{DF}.

(f) In the out-of-trim condition specified in paragraph (a) of this section, it must be possible from an overspeed condition at V_{DF}/M_{DF} to produce at least 1.5 g for recovery by applying not more than 125 pounds of longitudinal control force using either the primary longitudinal control alone or the primary longitudinal control and the longitudinal trim system. If the longitudinal trim is used to assist in producing the required load factor, it must be shown at V_{DF}/M_{DF} that the longitudinal trim can be actuated in the airplane nose-up direction with the primary surface loaded to correspond to the least of the following airplane nose-up control forces:

(1) The maximum control forces expected in service, as specified in §§ 23.301 and 23.397.

(2) The control force required to produce 1.5 g.

(3) The control force corresponding to buffeting or other phenomena of such intensity that it is a strong deterrent to further application of primary longitudinal control force.

■ 23. Amend § 23.561 by adding new paragraph (e)(1), and adding and reserving paragraph (e)(2), to read as follows:

§ 23.561 General.

* * * * *

(e) * * *

(1) For engines mounted inside the fuselage, aft of the cabin, it must be shown by test or analysis that the engine and attached accessories, and the engine mounting structure—

(i) Can withstand a forward acting static ultimate inertia load factor of 18.0 g plus the maximum takeoff engine thrust; or

(ii) The airplane structure is designed to preclude the engine and its attached accessories from entering or protruding into the cabin should the engine mounts fail.

(2) [Reserved]

■ 24. Amend § 23.562 by revising paragraphs (a) introductory text, (b) introductory text, and (c)(5)(ii) to read as follows:

§ 23.562 Emergency landing dynamic conditions.

(a) Each seat/restraint system for use in a normal, utility, or acrobatic category airplane, or in a commuter category jet airplane, must be designed to protect each occupant during an emergency landing when—

* * * * *

(b) Except for those seat/restraint systems that are required to meet paragraph (d) of this section, each seat/restraint system for crew or passenger occupancy in a normal, utility, or acrobatic category airplane, or in a commuter category jet airplane, must successfully complete dynamic tests or be demonstrated by rational analysis supported by dynamic tests, in accordance with each of the following conditions. These tests must be conducted with an occupant simulated by an anthropomorphic test dummy (ATD) defined by 49 CFR part 572, subpart B, or an FAA-approved equivalent, with a nominal weight of 170 pounds and seated in the normal upright position.

* * * * *

(c) * * *

(5) * * *

(ii) The value of HIC is defined as—

$$HIC = \left\{ (t_2 - t_1)\left[\frac{1}{(t_2 - t_1)} \int_{t_1}^{t_2} a(t)dt \right]^{2.5} \right\}_{Max}$$

Where—

t_1 is the initial integration time, expressed in seconds, t_2 is the final integration time, expressed in seconds, and a(t) is the total acceleration vs. time curve for the head strike expressed as a multiple of g (units of gravity).

* * * * *

■ 25. Amend § 23.571 by adding a new paragraph (d) to read as follows:

§ 23.571 Metallic pressurized cabin structures.

* * * * *

(d) If certification for operation above 41,000 feet is requested, a damage tolerance evaluation of the fuselage pressure boundary per § 23.573(b) must be conducted.

■ 26. Amend § 23.629 by revising paragraphs (b)(1), (b)(3), (b)(4), and (c) to read as follows:

§ 23.629 Flutter.

* * * * *

(b) * * *

(1) Proper and adequate attempts to induce flutter have been made within the speed range up to V_D/M_D, or V_{DF}/M_{DF} for jets;

* * * * *

(3) A proper margin of damping exists at V_D/M_D, or V_{DF}/M_{DF} for jets; and

(4) As V_D/M_D (or V_{DF}/M_{DF} for jets) is approached, there is no large or rapid reduction in damping.

(c) Any rational analysis used to predict freedom from flutter, control reversal and divergence must cover all speeds up to 1.2 V_D/1.2 M_D, limited to Mach 1.0 for subsonic airplanes.

* * * * *

■ 27. Amend § 23.703 by revising the introductory text and adding a new paragraph (c) to read as follows:

§ 23.703 Takeoff warning system.

For all airplanes with a maximum weight more than 6,000 pounds and all jets, unless it can be shown that a lift or longitudinal trim device that affects the takeoff performance of the airplane would not give an unsafe takeoff configuration when selected out of an approved takeoff position, a takeoff warning system must be installed and meet the following requirements:

* * * * *

(c) For the purpose of this section, an unsafe takeoff configuration is the inability to rotate or the inability to prevent an immediate stall after rotation.

■ 28. Amend § 23.735 by revising paragraph (e) to read as follows:

§ 23.735 Brakes.

* * * * *

(e) For airplanes required to meet § 23.55, the rejected takeoff brake kinetic energy capacity rating of each main wheel brake assembly may not be less than the kinetic energy absorption requirements determined under either of the following methods—

(1) The brake kinetic energy absorption requirements must be based on a conservative rational analysis of the sequence of events expected during a rejected takeoff at the design takeoff weight.

(2) Instead of a rational analysis, the kinetic energy absorption requirements for each main wheel brake assembly may be derived from the following formula—

$KE = 0.0443\ WV^2/N$ where;

KE = Kinetic energy per wheel (ft.-lbs.);

W = Design takeoff weight (lbs.);

V = Ground speed, in knots, associated with the maximum value of V_1 selected in accordance with § 23.51(c)(1);

N = Number of main wheels with brakes.

■ 29. Amend § 23.777 by revising paragraph (d) to read as follows:

§ 23.777 Cockpit controls.

* * * * *

(d) When separate and distinct control levers are co-located (such as located together on the pedestal), the control location order from left to right must be power (thrust) lever, propeller (rpm control), and mixture control (condition lever and fuel cut-off for turbine-powered airplanes). Power (thrust) levers must be easily distinguishable from other controls, and provide for accurate, consistent operation. Carburetor heat or alternate air control must be to the left of the throttle or at least eight inches from the mixture control when located other than on a pedestal. Carburetor heat or alternate air control, when located on a pedestal, must be aft or below the power (thrust) lever. Supercharger controls must be located below or aft of the propeller controls. Airplanes with tandem seating or single-place airplanes may utilize control locations on the left side of the cabin compartment; however, location order from left to right must be power (thrust) lever, propeller (rpm control), and mixture control.

* * * * *

■ 30. Amend § 23.807 by adding a new paragraph (e)(3) to read as follows:

§ 23.807 Emergency exits.

* * * * *

(e) * * *

(3) In lieu of paragraph (e)(2) of this section, if any side exit(s) cannot be above the waterline, a device may be placed at each of such exit(s) prior to ditching. This device must slow the inflow of water when such exit(s) is opened with the airplane ditched. For commuter category airplanes, the clear opening of such exit(s) must meet the requirements defined in paragraph (d) of this section.

■ 31. Amend § 23.831 by adding paragraphs (c) and (d) to read as follows:

§ 23.831 Ventilation.

* * * * *

(c) For jet pressurized airplanes that operate at altitudes above 41,000 feet, under normal operating conditions and in the event of any probable failure conditions of any system which would adversely affect the ventilating air, the ventilation system must provide reasonable passenger comfort. The ventilation system must also provide a sufficient amount of uncontaminated air to enable the flight crew members to perform their duties without undue discomfort or fatigue. For normal operating conditions, the ventilation system must be designed to provide each occupant with at least 0.55 pounds of fresh air per minute. In the event of the loss of one source of fresh air, the supply of fresh airflow may not be less than 0.4 pounds per minute for any period exceeding five minutes.

(d) For jet pressurized airplanes that operate at altitudes above 41,000 feet, other probable and improbable Environmental Control System failure conditions that adversely affect the passenger and flight crew compartment environmental conditions may not affect flight crew performance so as to result in a hazardous condition, and no occupant shall sustain permanent physiological harm.

■ 32. Amend § 23.841 by revising paragraphs (a) and (b)(6), and by adding paragraphs (c) and (d) to read as follows:

§ 23.841 Pressurized cabins.

(a) If certification for operation above 25,000 feet is requested, the airplane must be able to maintain a cabin pressure altitude of not more than 15,000 feet, in the event of any probable failure condition in the pressurization system. During decompression, the cabin altitude may not exceed 15,000 feet for more than 10 seconds and 25,000 feet for any duration.

(b) * * *

(6) Warning indication at the pilot station to indicate when the safe or preset pressure differential is exceeded and when a cabin pressure altitude of 10,000 feet is exceeded. The 10,000 foot cabin altitude warning may be increased up to 15,000 feet for operations from high altitude airfields (10,000 to 15,000 feet) provided:

(i) The landing or the take off modes (normal or high altitude) are clearly indicated to the flight crew.

(ii) Selection of normal or high altitude airfield mode requires no more than one flight crew action and goes to normal airfield mode at engine stop.

(iii) The pressurization system is designed to ensure cabin altitude does not exceed 10,000 feet when in flight above flight level (FL) 250.

(iv) The pressurization system and cabin altitude warning system is designed to ensure cabin altitude warning at 10,000 feet when in flight above FL250.

* * * * *

(c) If certification for operation above 41,000 feet and not more than 45,000 feet is requested—

(1) The airplane must prevent cabin pressure altitude from exceeding the following after decompression from any probable pressurization system failure in conjunction with any undetected, latent pressurization system failure condition:

(i) If depressurization analysis shows that the cabin altitude does not exceed 25,000 feet, the pressurization system must prevent the cabin altitude from exceeding the cabin altitude-time history shown in Figure 1 of this section.

(ii) Maximum cabin altitude is limited to 30,000 feet. If cabin altitude exceeds 25,000 feet, the maximum time the cabin altitude may exceed 25,000 feet is 2 minutes; time starting when the cabin altitude exceeds 25,000 feet and ending when it returns to 25,000 feet.

(2) The airplane must prevent cabin pressure altitude from exceeding the following after decompression from any single pressurization system failure in conjunction with any probable fuselage damage:

(i) If depressurization analysis shows that the cabin altitude does not exceed 37,000 feet, the pressurization system must prevent the cabin altitude from exceeding the cabin altitude-time history shown in Figure 2 of this section.

(ii) Maximum cabin altitude is limited to 40,000 feet. If cabin altitude exceeds 37,000 feet, the maximum time the cabin altitude may exceed 25,000 feet is 2 minutes; time starting when the cabin altitude exceeds 25,000 feet and ending when it returns to 25,000 feet.

(3) In showing compliance with paragraphs (c)(1) and (c)(2) of this section, it may be assumed that an emergency descent is made by an approved emergency procedure. A 17-second flight crew recognition and reaction time must be applied between cabin altitude warning and the initiation of an emergency descent. Fuselage structure, engine and system failures are to be considered in evaluating the cabin decompression.

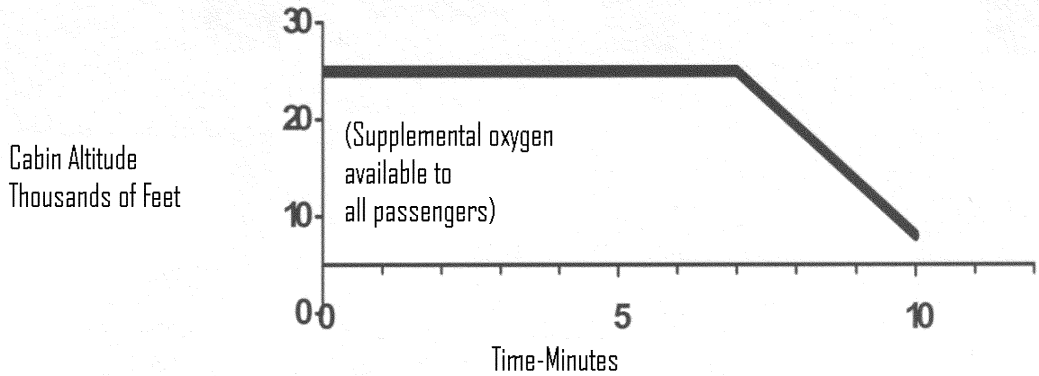

FIGURE 1—Cabin Altitude--Time History

Note: For Figure 1, time starts at the moment cabin altitude exceeds 10,000 feet during decompression.

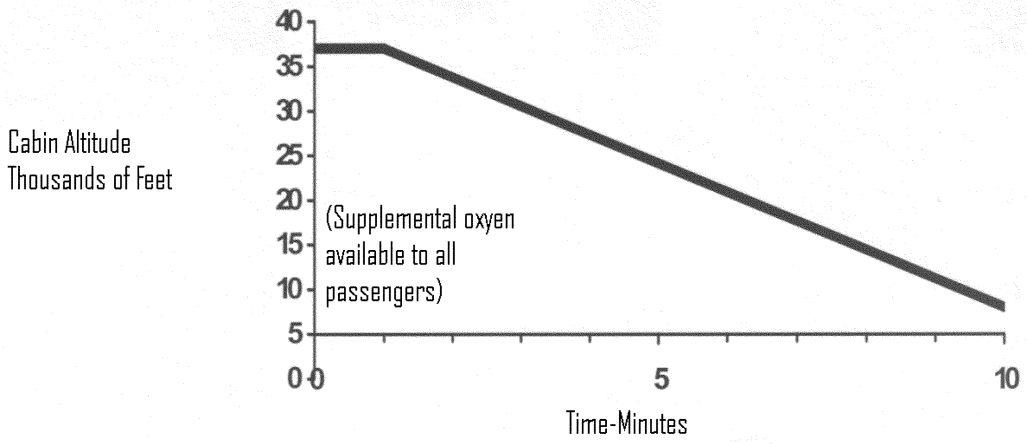

FIGURE 2—Cabin Altitude—Time History

Note: For Figure 2, time starts at the moment cabin altitude exceeds 10,000 feet during decompression.

(d) If certification for operation above 45,000 feet and not more than 51,000 feet is requested—

(1) Pressurized cabins must be equipped to provide a cabin pressure altitude of not more than 8,000 feet at the maximum operating altitude of the airplane under normal operating conditions.

(2) The airplane must prevent cabin pressure altitude from exceeding the following after decompression from any failure condition not shown to be extremely improbable:

(i) Twenty-five thousand (25,000) feet for more than 2 minutes; or

(ii) Forty thousand (40,000) feet for any duration.

(3) Fuselage structure, engine and system failures are to be considered in evaluating the cabin decompression.

(4) In addition to the cabin altitude indicating means in (b)(6) of this section, an aural or visual signal must be provided to warn the flight crew when the cabin pressure altitude exceeds 10,000 feet.

(5) The sensing system and pressure sensors necessary to meet the requirements of (b)(5), (b)(6), and (d)(4) of this section and § 23.1447(e), must, in the event of low cabin pressure, actuate the required warning and automatic presentation devices without any delay that would significantly increase the hazards resulting from decompression.

■ 33. Amend § 23.853 by revising paragraph (d)(2) to read as follows:

§ 23.853 Passenger and crew compartment interiors.

* * * * *

(d) * * *

(2) Lavatories must have ''No Smoking'' or ''No Smoking in Lavatory'' placards located conspicuously on each side of the entry door.

* * * * *

■ 34. Add a new § 23.856 to read as follows:

§ 23.856 Thermal/acoustic insulation materials.

Thermal/acoustic insulation material installed in the fuselage must meet the flame propagation test requirements of part II of Appendix F to this part, or other approved equivalent test requirements. This requirement does not apply to ''small parts,'' as defined in § 23.853(d)(3)(v).

■ 35. Amend § 23.903 by adding paragraph (b)(3) to read as follows:

§ 23.903 Engines.

* * * * *

(b) * * *

(3) For engines embedded in the fuselage behind the cabin, the effects of a fan exiting forward of the inlet case (fan disconnect) must be addressed, the passengers must be protected, and the airplane must be controllable to allow for continued safe flight and landing.

* * * * *

■ 36. Amend § 23.1165 by revising paragraph (f) to read as follows:

§ 23.1165 Engine ignition systems.

* * * * *

(f) In addition, for commuter category airplanes, each turbine engine ignition system must be an essential electrical load.

■ 37. Amend § 23.1193 by revising paragraph (g) to read as follows:

§ 23.1193 Cowling and nacelle.

* * * * *

(g) In addition, for all airplanes with engine(s) embedded in the fuselage or in pylons on the aft fuselage, the airplane must be designed so that no fire originating in any engine compartment can enter, either through openings or by burn-through, any other region where it would create additional hazards.

■ 38. Amend § 23.1195 by revising the introductory text of paragraph (a) and by revising paragraph (a)(2) to read as follows:

§ 23.1195 Fire extinguishing systems.

(a) For all airplanes with engine(s) embedded in the fuselage or in pylons on the aft fuselage, fire extinguishing

systems must be installed and compliance shown with the following:

* * * * *

(2) The fire extinguishing system, the quantity of the extinguishing agent, the rate of discharge, and the discharge distribution must be adequate to extinguish fires. An individual ''one shot'' system may be used, except for engine(s) embedded in the fuselage, where a ''two shot'' system is required.

* * * * *

■ 39. Amend § 23.1197 by revising the introductory text to read as follows:

§ 23.1197 Fire extinguishing agents.

For all airplanes with engine(s) embedded in the fuselage or in pylons on the aft fuselage the following applies:

* * * * *

■ 40. Amend § 23.1199 by revising the introductory text to read as follows:

§ 23.1199 Extinguishing agent containers.

For all airplanes with engine(s) embedded in the fuselage or in pylons on the aft fuselage the following applies:

* * * * *

■ 41. Amend § 23.1201 by revising the introductory text to read as follows:

§ 23.1201 Fire extinguishing systems materials.

For all airplanes with engine(s) embedded in the fuselage or in pylons on the aft fuselage the following applies:

* * * * *

■ 42. Revise § 23.1301 by revising paragraphs (b) and (c) and by removing paragraph (d) to read as follows:

§ 23.1301 Function and installation.

* * * * *

(b) Be labeled as to its identification, function, or operating limitations, or any applicable combination of these factors; and

(c) Be installed according to limitations specified for that equipment.

* * * * *

■ 43. Amend § 23.1303 by revising paragraph (c) to read as follows:

§ 23.1303 Flight and navigation instruments.

* * * * *

(c) A magnetic direction indicator.

* * * * *

■ 44. Revise § 23.1309 to read as follows:

§ 23.1309 Equipment, systems, and installations.

The requirements of this section, except as identified in paragraphs (a) through (d), are applicable, in addition to specific design requirements of part 23, to any equipment or system as installed in the airplane. This section is a regulation of general requirements and does not supersede any requirements contained in another section of part 23.

(a) The airplane equipment and systems must be designed and installed so that:

(1) Those required for type certification or by operating rules perform as intended under the airplane operating and environmental conditions, including the indirect effects of lightning strikes.

(2) Any equipment and system does not adversely affect the safety of the airplane or its occupants, or the proper functioning of those covered by paragraph (a)(1) of this section.

(b) Minor, major, hazardous, or catastrophic failure condition(s), which occur during Type Inspection Authorization or FAA flight-certification testing, must have root cause analysis and corrective action.

(c) The airplane systems and associated components considered separately and in relation to other systems, must be designed and installed so that:

(1) Each catastrophic failure condition is extremely improbable and does not result from a single failure;

(2) Each hazardous failure condition is extremely remote; and

(3) Each major failure condition is remote.

(d) Information concerning an unsafe system operating condition must be provided in a timely manner to the crew to enable them to take appropriate corrective action. An appropriate alert must be provided if immediate pilot awareness and immediate or subsequent corrective action is required. Systems and controls, including indications and annunciations, must be designed to minimize crew errors which could create additional hazards.

■ 45. Add a new § 23.1310 to read as follows:

§ 23.1310 Power source capacity and distribution.

(a) Each installation whose functioning is required for type certification or under operating rules and that requires a power supply is an ''essential load'' on the power supply. The power sources and the system must be able to supply the following power loads in probable operating combinations and for probable durations:

(1) Loads connected to the system with the system functioning normally.

(2) Essential loads, after failure of any one prime mover, power converter, or energy storage device.

(3) Essential loads after failure of—

(i) Any one engine on two-engine airplanes; and

(ii) Any two engines on airplanes with three or more engines.

(4) Essential loads for which an alternate source of power is required, after any failure or malfunction in any one power supply system, distribution system, or other utilization system.

(b) In determining compliance with paragraphs (a)(2) and (3) of this section, the power loads may be assumed to be reduced under a monitoring procedure consistent with safety in the kinds of operation authorized. Loads not required in controlled flight need not be considered for the two-engine-inoperative condition on airplanes with three or more engines.

■ 46. Amend § 23.1311 by revising paragraphs (a)(5), (a)(6), (a)(7), and paragraph (b) to read as follows:

§ 23.1311 Electronic display instrument systems.

(a) * * *

(5) For certification for Instrument Flight Rules (IFR) operations, have an independent magnetic direction indicator and either an independent secondary mechanical altimeter, airspeed indicator, and attitude instrument or an electronic display parameters for the altitude, airspeed, and attitude that are independent from the airplane's primary electrical power system. These secondary instruments may be installed in panel positions that are displaced from the primary positions specified by § 23.1321(d), but must be located where they meet the pilot's visibility requirements of § 23.1321(a).

(6) Incorporate sensory cues that provide a quick glance sense of rate and, where appropriate, trend information to the parameter being displayed to the pilot.

(7) Incorporate equivalent visual displays of the instrument markings required by §§ 23.1541 through 23.1553, or visual displays that alert the pilot to abnormal operational values or approaches to established limitation values, for each parameter required to be displayed by this part.

(b) The electronic display indicators, including their systems and installations, and considering other airplane systems, must be designed so that one display of information essential for continued safe flight and landing will be available within one second to the crew by a single pilot action or by automatic means for continued safe operation, after any single failure or probable combination of failures.

* * * * *

■ 47. Amend § 23.1323 by revising paragraph (e) to read as follows:

§ 23.1323 Airspeed indicating system.

* * * * *

(e) In addition, for normal, utility, and acrobatic category multiengine jets of more than 6,000 pounds maximum weight and commuter category airplanes, each system must be calibrated to determine the system error during the accelerate-takeoff ground run. The ground run calibration must be determined—

(1) From 0.8 of the minimum value of V_1 to the maximum value of V_2, considering the approved ranges of altitude and weight; and

(2) The ground run calibration must be determined assuming an engine failure at the minimum value of V_1.

* * * * *

■ 48. Amend § 23.1331 by revising paragraph (c) to read as follows:

§ 23.1331 Instruments using a power source.

* * * * *

(c) For certification for Instrument Flight Rules (IFR) operations and for the heading, altitude, airspeed, and attitude, there must be at least:

(1) Two independent sources of power (not driven by the same engine on multiengine airplanes), and a manual or an automatic means to select each power source; or

(2) A separate display of parameters for heading, altitude, airspeed, and attitude that has a power source independent from the airplane's primary electrical power system.

■ 49. Amend § 23.1353 by revising paragraph (h) to read as follows:

§ 23.1353 Storage battery design and installation.

* * * * *

(h)(1) In the event of a complete loss of the primary electrical power generating system, the battery must be capable of providing electrical power to those loads that are essential to continued safe flight and landing for:

(i) At least 30 minutes for airplanes that are certificated with a maximum altitude of 25,000 feet or less; and

(ii) At least 60 minutes for airplanes that are certificated with a maximum altitude over 25,000 feet.

(2) The time period includes the time to recognize the loss of generated power and to take appropriate load shedding action.

■ 50. Amend § 23.1431, paragraph (a) to read as follows:

§ 23.1431 Electronic equipment.

(a) In showing compliance with § 23.1309(a), (b), and (c) with respect to radio and electronic equipment and their installations, critical environmental conditions must be considered.

* * * * *

■ 51. Revise § 23.1443 to read as follows:

§ 23.1443 Minimum mass flow of supplemental oxygen.

(a) If the airplane is to be certified above 41,000 feet, a continuous flow oxygen system must be provided for each passenger.

(b) If continuous flow oxygen equipment is installed, an applicant must show compliance with the requirements of either paragraphs (b)(1) and (b)(2) or paragraph (b)(3) of this section:

(1) For each passenger, the minimum mass flow of supplemental oxygen required at various cabin pressure altitudes may not be less than the flow required to maintain, during inspiration and while using the oxygen equipment (including masks) provided, the following mean tracheal oxygen partial pressures:

(i) At cabin pressure altitudes above 10,000 feet up to and including 18,500 feet, a mean tracheal oxygen partial pressure of 100mm Hg when breathing 15 liters per minute, Body Temperature, Pressure, Saturated (BTPS) and with a tidal volume of 700cc with a constant time interval between respirations.

(ii) At cabin pressure altitudes above 18,500 feet up to and including 40,000 feet, a mean tracheal oxygen partial pressure of 83.8mm Hg when breathing 30 liters per minute, BTPS, and with a tidal volume of 1,100cc with a constant time interval between respirations.

(2) For each flight crewmember, the minimum mass flow may not be less than the flow required to maintain, during inspiration, a mean tracheal oxygen partial pressure of 149mm Hg when breathing 15 liters per minute, BTPS, and with a maximum tidal volume of 700cc with a constant time interval between respirations.

(3) The minimum mass flow of supplemental oxygen supplied for each user must be at a rate not less than that shown in the following figure for each altitude up to and including the maximum operating altitude of the airplane.

Cabin Pressure Altitude Thousands of Feet.

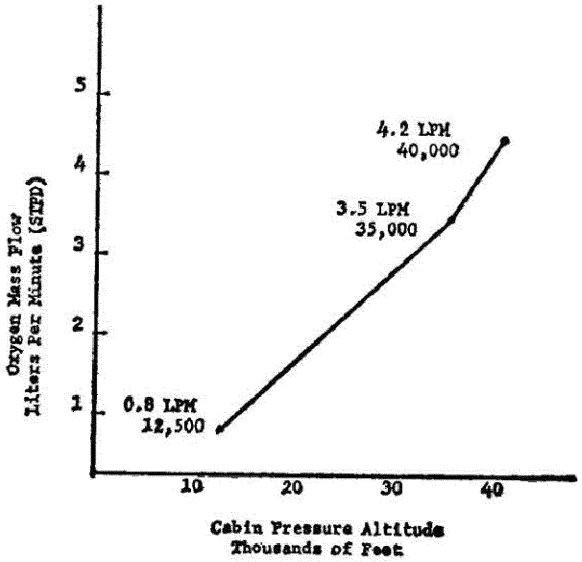

FIGURE 1--Cabin Pressure Altitude

(c) If demand equipment is installed for use by flight crewmembers, the minimum mass flow of supplemental oxygen required for each flight crewmember may not be less than the flow required to maintain, during inspiration, a mean tracheal oxygen partial pressure of 122mm Hg up to and including a cabin pressure altitude of 35,000 feet, and 95 percent oxygen between cabin pressure altitudes of 35,000 and 40,000 feet, when breathing 20 liters per minutes BTPS. In addition, there must be means to allow the flight crew to use undiluted oxygen at their discretion.

(d) If first-aid oxygen equipment is installed, the minimum mass flow of oxygen to each user may not be less than 4 liters per minute, STPD. However, there may be a means to decrease this flow to not less than 2 liters per minute, STPD, at any cabin altitude. The quantity of oxygen required is based upon an average flow rate of 3 liters per minute per person for whom first-aid oxygen is required.

(e) As used in this section:

(1) BTPS means Body Temperature, and Pressure, Saturated (which is 37 °C, and the ambient pressure to which the body is exposed, minus 47mm Hg, which is the tracheal pressure displaced by water vapor pressure when the breathed air becomes saturated with water vapor at 37 °C).

(2) STPD means Standard, Temperature, and Pressure, Dry (which is 0 °C at 760mm Hg with no water vapor).

■ 52. Amend § 23.1445 by adding a new paragraph (c) to read as follows:

§ 23.1445 Oxygen distribution system.

* * * * *

(c) If the flight crew and passengers share a common source of oxygen, a means to separately reserve the minimum supply required by the flight crew must be provided.

■ 53. Amend § 23.1447 by adding a new paragraph (g) to read as follows:

§ 23.1447 Equipment standards for oxygen dispensing units.

* * * * *

(g) If the airplane is to be certified for operation above 41,000 feet, a quick-donning oxygen mask system, with a pressure demand, mask mounted regulator must be provided for the flight crew. This dispensing unit must be immediately available to the flight crew when seated at their station and installed so that it:

(1) Can be placed on the face from its ready position, properly secured, sealed, and supplying oxygen upon demand, with one hand, within five seconds and without disturbing eyeglasses or causing delay in proceeding with emergency duties; and

(2) Allows, while in place, the performance of normal communication functions.

■ 54. Amend § 23.1505 by revising paragraph (c) to read as follows:

§ 23.1505 Airspeed limitations.

* * * * *

(c)(1) Paragraphs (a) and (b) of this section do not apply to turbine airplanes or to airplanes for which a design diving speed V_D/M_D is established under § 23.335(b)(4). For those airplanes, a maximum operating limit speed (V_{MO}/M_{MO} airspeed or Mach number, whichever is critical at a particular altitude) must be established as a speed that may not be deliberately exceeded in any regime of flight (climb, cruise, or descent) unless a higher speed is authorized for flight test or pilot training operations.

(2) V_{MO}/M_{MO} must be established so that it is not greater than the design cruising speed V_C/M_C and so that it is sufficiently below V_D/M_D, or V_{DF}/M_{DF} for jets, and the maximum speed shown under § 23.251 to make it highly improbable that the latter speeds will be inadvertently exceeded in operations.

(3) The speed margin between V_{MO}/M_{MO} and V_D/M_D, or V_{DF}/M_{DF} for jets, may not be less than that determined under § 23.335(b), or the speed margin found necessary in the flight tests conducted under § 23.253.

■ 55. Amend § 23.1545 by revising paragraph (d) to read as follows:

§ 23.1545 Airspeed indicator.

* * * * *

(d) Paragraphs (b)(1) through (b)(4) and paragraph (c) of this section do not apply to airplanes for which a maximum operating speed V_{MO}/M_{MO} is established under § 23.1505(c). For those airplanes, there must either be a maximum allowable airspeed indication

showing the variation of V_{MO}/M_{MO} with altitude or compressibility limitations (as appropriate), or a radial red line marking for V_{MO}/M_{MO} must be made at lowest value of V_{MO}/M_{MO} established for any altitude up to the maximum operating altitude for the airplane.

■ 56. Amend § 23.1555 by adding a new paragraph (d)(3) to read as follows:

§ 23.1555 Control markings.

* * * * *

(d) * * *

(3) For fuel systems having a calibrated fuel quantity indication system complying with § 23.1337(b)(1) and accurately displaying the actual quantity of usable fuel in each selectable tank, no fuel capacity placards outside of the fuel quantity indicator are required.

* * * * *

■ 57. Amend § 23.1559 by adding a new paragraph (d) to read as follows:

§ 23.1559 Operating limitations placard.

* * * * *

(d) The placard(s) required by this section need not be lighted.

■ 58. Amend § 23.1563 by adding a new paragraph (d) to read as follows:

§ 23.1563 Airspeed placard.

* * * * *

(d) The airspeed placard(s) required by this section need not be lighted if the landing gear operating speed is indicated on the airspeed indicator or other lighted area such as the landing gear control and the airspeed indicator has features such as low speed awareness that provide ample warning prior to V_{MC}.

■ 59. Amend § 23.1567 by adding a new paragraph (e) to read as follows:

§ 23.1567 Flight maneuver placard.

* * * * *

(e) The placard(s) required by this section need not be lighted.

■ 60. Amend § 23.1583 as follows:

■ A. Revise the introductory text of paragraphs (c)(3) and (c)(4);

■ B. Redesignate paragraphs (c)(4)(iii) and (c)(4)(iv) as paragraphs (c)(4)(ii)(A) and (c)(4)(ii)(B); and

■ C. Revise paragraph (c)(5) introductory text:

§ 23.1583 Operating limitations.

* * * * *

(c) * * *

(3) For reciprocating engine-powered airplanes of more than 6,000 pounds maximum weight, single-engine turbines, and multiengine jets 6,000 pounds or less maximum weight in the normal, utility, and acrobatic category, performance operating limitations as follows—

* * * * *

(4) For normal, utility, and acrobatic category multiengine jets over 6,000 pounds and commuter category airplanes, the maximum takeoff weight for each airport altitude and ambient temperature within the range selected by the applicant at which—

* * * * *

(5) For normal, utility, and acrobatic category multiengine jets over 6,000 pounds and commuter category airplanes, the maximum landing weight for each airport altitude within the range selected by the applicant at which—

* * * * *

■ 61. Amend § 23.1585 by revising paragraph (f) introductory text to read as follows:

§ 23.1585 Operating procedures.

* * * * *

(f) In addition to paragraphs (a) and (c) of this section, for normal, utility, and acrobatic category multiengine jets weighing over 6,000 pounds, and commuter category airplanes, the information must include the following:

* * * * *

■ 62. Amend § 23.1587 by revising paragraph (d) introductory text to read as follows:

§ 23.1587 Performance information.

* * * * *

(d) In addition to paragraph (a) of this section, for normal, utility, and acrobatic category multiengine jets weighing over 6,000 pounds, and commuter category airplanes, the following information must be furnished—

* * * * *

■ 63. Amend Appendix F to Part 23 as follows:

■ A. Redesignate the existing text as Part I and add a new Part I heading;

■ B. Add a new Part II.

Appendix F to Part 23—Test Procedure

Part I—Acceptable Test Procedure for Self-Extinguishing Materials for Showing Compliance With §§ 23.853, 23.855, and 23.1359

* * * * *

Part II—Test Method To Determine the Flammability and Flame Propagation Characteristics of Thermal/Acoustic Insulation Materials

Use this test method to evaluate the flammability and flame propagation characteristics of thermal/acoustic insulation when exposed to both a radiant heat source and a flame.

(a) *Definitions.*

Flame propagation means the furthest distance of the propagation of visible flame towards the far end of the test specimen, measured from the midpoint of the ignition source flame. Measure this distance after initially applying the ignition source and before all flame on the test specimen is extinguished. The measurement is not a determination of burn length made after the test.

Radiant heat source means an electric or air propane panel.

Thermal/acoustic insulation means a material or system of materials used to provide thermal and/or acoustic protection. Examples include fiberglass or other batting material encapsulated by a film covering and foams.

Zero point means the point of application of the pilot burner to the test specimen.

(b) *Test apparatus.*

BILLING CODE 4910–13–P

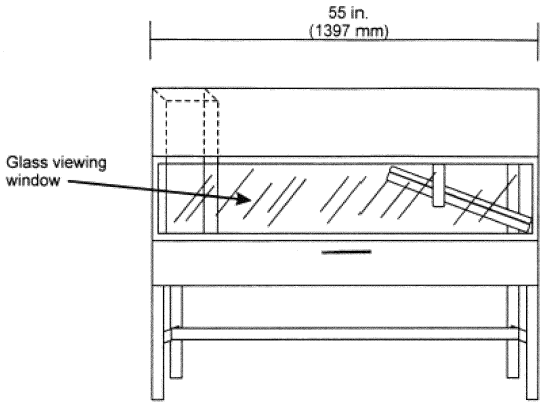

FIGURE F1—Radiant Panel Test Chamber

(1) *Radiant panel test chamber.* Conduct tests in a radiant panel test chamber (see figure F1 above). Place the test chamber under an exhaust hood to facilitate clearing the chamber of smoke after each test. The radiant panel test chamber must be an enclosure 55 inches (1397 mm) long by 19.5 inches (495 mm) deep by 28 inches (710 mm) to 30 inches (maximum) (762 mm) above the test specimen. Insulate the sides, ends, and top with a fibrous ceramic insulation, such as Kaowool MTM board. On the front side, provide a 52 by 12-inch (1321 by 305 mm) draft-free, high-temperature, glass window for viewing the sample during testing. Place a door below the window to provide access to the movable specimen platform holder. The bottom of the test chamber must be a sliding steel platform that has provision for securing the test specimen holder in a fixed and level position. The chamber must have an internal chimney with exterior dimensions of 5.1 inches (129 mm) wide, by 16.2 inches (411 mm) deep by 13 inches (330 mm) high at the opposite end of the chamber from the radiant energy source. The interior dimensions must be 4.5 inches (114 mm) wide by 15.6 inches (395 mm) deep. The chimney must extend to the top of the chamber (see figure F2).

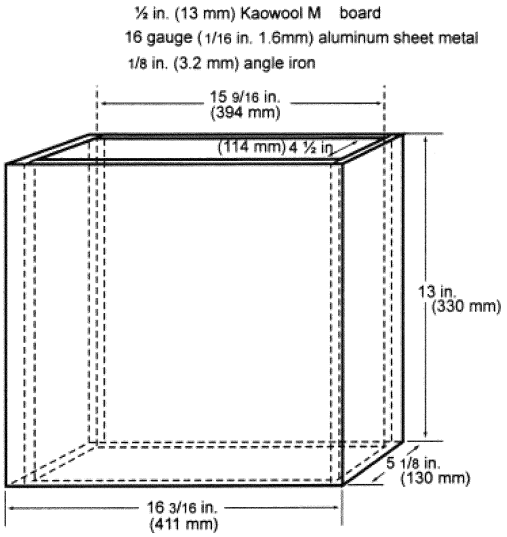

FIGURE F2—Internal Chimney

(2) *Radiant heat source.* Mount the radiant heat energy source in a cast iron frame or equivalent. An electric panel must have six, 3-inch wide emitter strips. The emitter strips must be perpendicular to the length of the panel. The panel must have a radiation surface of 12⅞ by 18½ inches (327 by 470 mm). The panel must be capable of operating at temperatures up to 1300 °F (704 °C). An air propane panel must be made of a porous refractory material and have a radiation surface of 12 by 18 inches (305 by 457 mm). The panel must be capable of operating at temperatures up to 1,500 °F (816 °C). See figures F3a and F3b.

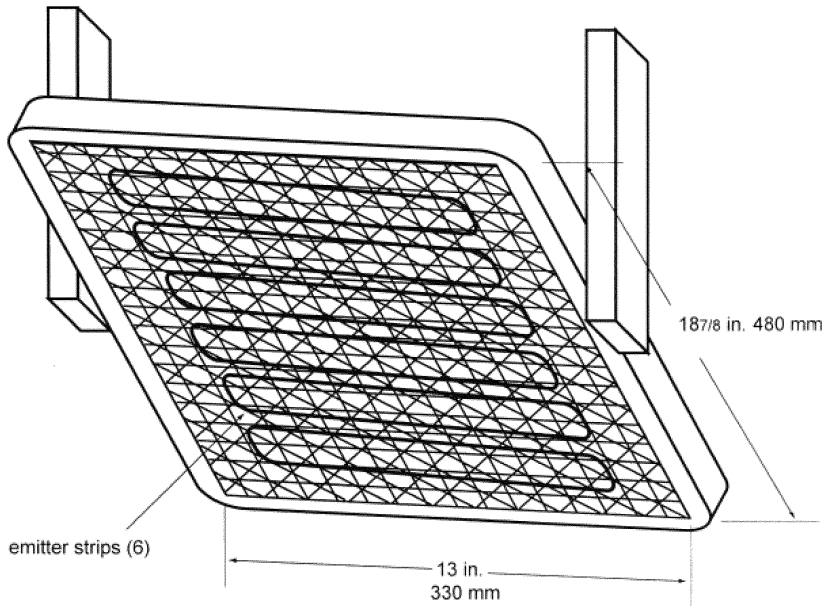

FIGURE F3a—Electric Panel

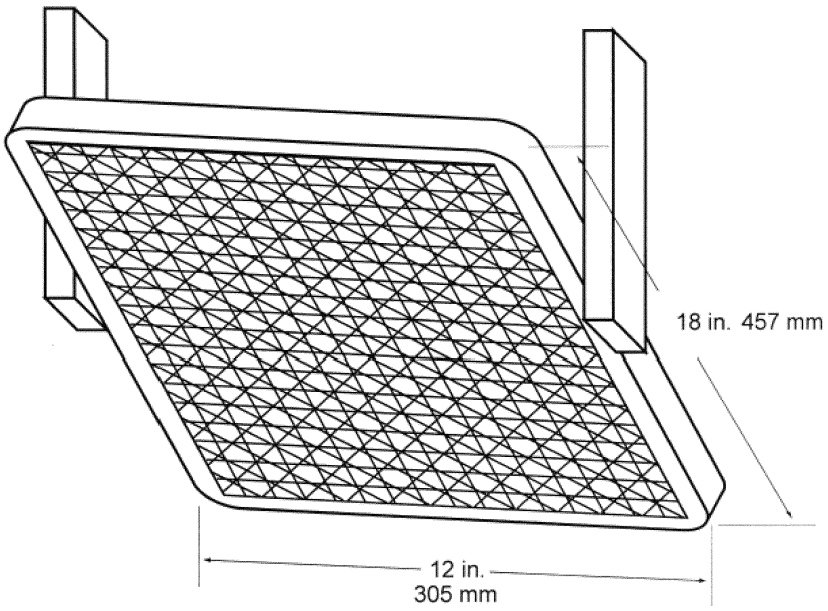

FIGURE F3b—Air Propane Radiant Panel

BILLING CODE 4910–13–C

(i) *Electric radiant panel.* The radiant panel must be 3-phase and operate at 208 volts. A single-phase, 240 volt panel is also acceptable. Use a solid-state power controller and microprocessor-based controller to set the electric panel operating parameters.

(ii) *Gas radiant panel.* Use propane (liquid petroleum gas—2.1 UN 1075) for the radiant panel fuel. The panel fuel system must consist of a venturi-type aspirator for mixing gas and air at approximately atmospheric pressure. Provide suitable instrumentation for monitoring and controlling the flow of fuel and air to the panel. Include an air flow gauge, an air flow regulator, and a gas pressure gauge.

(iii) *Radiant panel placement.* Mount the panel in the chamber at 30 degrees to the horizontal specimen plane, and 7½ inches above the zero point of the specimen.

(3) *Specimen holding system.*

(i) The sliding platform serves as the housing for test specimen placement. Brackets may be attached (via wing nuts) to the top lip of the platform in order to accommodate various thicknesses of test specimens. Place the test specimens on a sheet of Kaowool MTM board or 1260 Standard Board (manufactured by Thermal Ceramics and available in Europe), or equivalent, either resting on the bottom lip of the sliding platform or on the base of the brackets. It may be necessary to use multiple sheets of material based on the thickness of the test specimen (to meet the sample height requirement). Typically, these non-

combustible sheets of material are available in ¼-inch (6 mm) thicknesses. See figure F4. A sliding platform that is deeper than the 2-inch (50.8mm) platform shown in figure F4 is also acceptable as long as the sample height requirement is met.

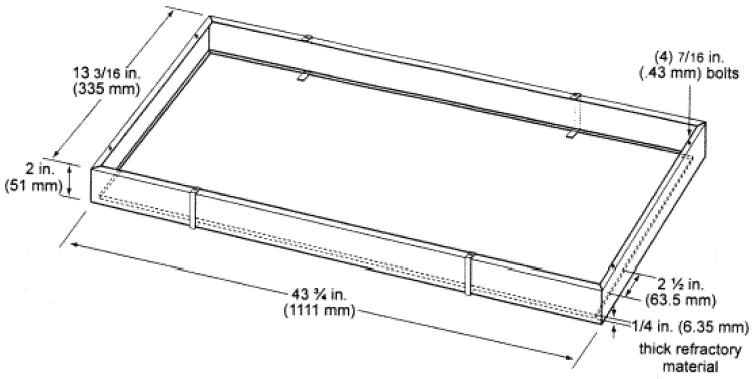

FIGURE F4—Sliding Platform

(ii) Attach a ½-inch (13 mm) piece of Kaowool MTM board or other high temperature material measuring 41½ by 8¼ inches (1054 by 210 mm) to the back of the platform. This board serves as a heat retainer and protects the test specimen from excessive preheating. The height of this board may not impede the sliding platform movement (in and out of the test chamber). If the platform has been fabricated such that the back side of the platform is high enough to prevent excess preheating of the specimen when the sliding platform is out, a retainer board is not necessary.

(iii) Place the test specimen horizontally on the non-combustible board(s). Place a steel retaining/securing frame fabricated of mild steel, having a thickness of ⅛-inch (3.2 mm) and overall dimensions of 23 by 13⅛ inches (584 by 333 mm) with a specimen opening of 19 by 10¾ inches (483 by 273 mm) over the test specimen. The front, back, and right portions of the top flange of the frame must rest on the top of the sliding platform, and the bottom flanges must pinch all 4 sides of the test specimen. The right bottom flange must be flush with the sliding platform. See figure F5.

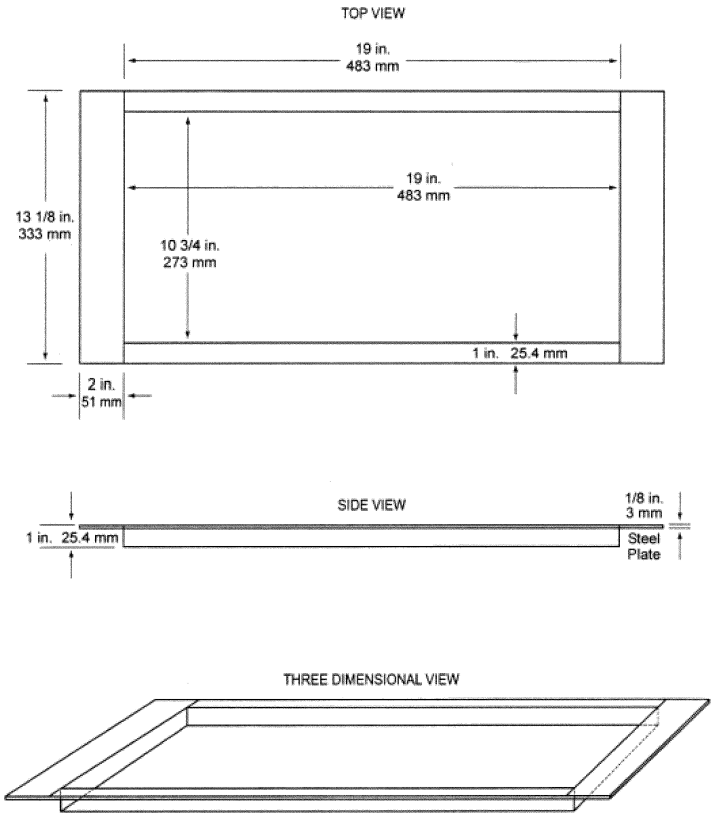

FIGURE F5: 3 Views

(4) *Pilot Burner.* The pilot burner used to ignite the specimen must be a BernzomaticTM commercial propane venturi torch with an axially symmetric burner tip and a propane supply tube with an orifice diameter of 0.006 inches (0.15 mm). The length of the burner tube must be 2⅞ inches (71 mm). The propane flow must be adjusted via gas pressure through an in-line regulator to produce a blue inner cone length of ¾-inch (19 mm). A ¾-inch (19 mm) guide (such as a thin strip of metal) may be soldered to the top of the burner to aid in setting the flame height. The overall flame length must be approximately 5 inches long (127 mm). Provide a way to move the burner out of the ignition position so that the flame is horizontal and at least 2 inches (50 mm) above the specimen plane. See figure F6.

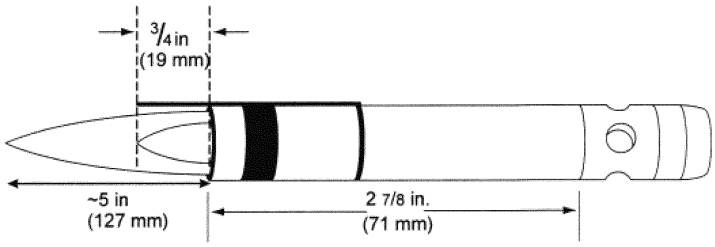

FIGURE F6—Propane Pilot Burner

(5) *Thermocouples.* Install a 24 American Wire Gauge (AWG) Type K (Chromel-Alumel) thermocouple in the test chamber for temperature monitoring. Insert it into the chamber through a small hole drilled through the back of the chamber. Place the thermocouple so that it extends 11 inches (279 mm) out from the back of the chamber wall, 11½ inches (292 mm) from the right side of the chamber wall, and is 2 inches (51 mm) below the radiant panel. The use of other thermocouples is optional.

(6) *Calorimeter.* The calorimeter must be a one-inch cylindrical water-cooled, total heat flux density, foil type Gardon Gage that has a range of 0 to 5 BTU/ft^2-second (0 to 5.7 Watts/cm^2).

(7) *Calorimeter calibration specification and procedure.*

(i) Calorimeter specification.

(A) Foil diameter must be 0.25 +/−0.005 inches (6.35 +/−0.13 mm).

(B) Foil thickness must be 0.0005 +/−0.0001 inches (0.013 +/− 0.0025 mm).

(C) Foil material must be thermocouple grade Constantan.

(D) Temperature measurement must be a Copper Constantan thermocouple.

(E) The copper center wire diameter must be 0.0005 inches (0.013 mm).

(F) The entire face of the calorimeter must be lightly coated with ''Black Velvet'' paint having an emissivity of 96 or greater.

(ii) Calorimeter calibration.

(A) The calibration method must be by comparison to a like standardized transducer.

(B) The standardized transducer must meet the specifications given in paragraph II(b)(6) of this appendix.

(C) Calibrate the standard transducer against a primary standard traceable to the National Institute of Standards and Technology (NIST).

(D) The method of transfer must be a heated graphite plate.

(E) The graphite plate must be electrically heated, have a clear surface area on each side of the plate of at least 2 by 2 inches (51 by 51 mm), and be ⅛-inch +/− ⅟₁₆-inch thick (3.2 +/− 1.6 mm).

(F) Center the 2 transducers on opposite sides of the plates at equal distances from the plate.

(G) The distance of the calorimeter to the plate must be no less than 0.0625 inches (1.6 mm), and no greater than 0.375 inches (9.5 mm).

(H) The range used in calibration must be at least 0–3.5 BTUs/ft ^{2}-second (0–3.9 Watts/cm ^{2}) and no greater than 0–5.7 BTUs/ft ^{2}-second (0–6.4 Watts/cm ^{2}).

(I) The recording device used must record the 2 transducers simultaneously or at least within ⅟₁₀ of each other.

(8) *Calorimeter fixture.* With the sliding platform pulled out of the chamber, install the calorimeter holding frame and place a sheet of non-combustible material in the bottom of the sliding platform adjacent to the holding frame. This will prevent heat losses during calibration. The frame must be 13⅛ inches (333 mm) deep (front to back) by 8 inches (203 mm) wide and must rest on the top of the sliding platform. It must be fabricated of ⅛-inch (3.2 mm) flat stock steel and have an opening that accommodates a ½-inch (12.7 mm) thick piece of refractory board, which is level with the top of the sliding platform. The board must have three 1-inch (25.4 mm) diameter holes drilled through the board for calorimeter insertion. The distance to the radiant panel surface from the centerline of the first hole (''zero'' position) must be 7½ ± ⅛-inches (191 ± 3 mm). The distance between the centerline of the first hole to the centerline of the second hole must be 2 inches (51 mm). It must also be the same distance from the centerline of the second hole to the centerline of the third hole. See figure F7. A calorimeter holding frame that differs in construction is acceptable as long as the height from the centerline of the first hole to the radiant panel and the distance between holes is the same as described in this paragraph.

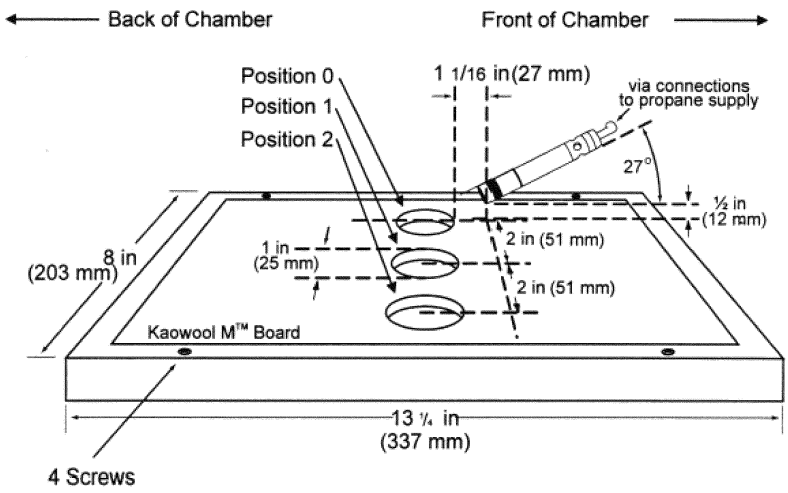

FIGURE F7—Calorimeter Holding Frame

(9) *Instrumentation.* Provide a calibrated recording device with an appropriate range or a computerized data acquisition system to measure and record the outputs of the calorimeter and the thermocouple. The data acquisition system must be capable of recording the calorimeter output every second during calibration.

(10) *Timing device.* Provide a stopwatch or other device, accurate to ± 1 second/hour, to measure the time of application of the pilot burner flame.

(c) *Test specimens.*

(1) *Specimen preparation.* Prepare and test a minimum of three test specimens. If an oriented film cover material is used, prepare and test both the warp and fill directions.

(2) *Construction.* Test specimens must include all materials used in construction of the insulation (including batting, film, scrim, tape, *etc.*). Cut a piece of core material such as foam or fiberglass, and cut a piece of film cover material (if used) large enough to cover the core material. Heat sealing is the preferred method of preparing fiberglass samples, since they can be made without compressing the fiberglass (''box sample''). Cover materials that are not heat sealable may be stapled, sewn, or taped as long as the cover material is sufficiently over-cut to be drawn down the sides without compressing the core material. The fastening means should be as continuous as possible along the length of the seams. The specimen thickness must be of the same thickness as installed in the airplane.

(3) *Specimen Dimensions.* To facilitate proper placement of specimens in the sliding platform housing, cut non-rigid core materials, such as fiberglass, 12½ inches (318mm) wide by 23 inches (584mm) long. Cut rigid materials, such as foam, 11½ ± ¼ inches (292 mm ± 6mm) wide by 23 inches (584mm) long in order to fit properly in the sliding platform housing and provide a flat, exposed surface equal to the opening in the housing.

(d) *Specimen conditioning.* Condition the test specimens at 70 ± 5 °F (21 ± 2 °C) and 55 percent ± 10 percent relative humidity, for a minimum of 24 hours prior to testing.

(e) *Apparatus Calibration.*

(1) With the sliding platform out of the chamber, install the calorimeter holding frame. Push the platform back into the chamber and insert the calorimeter into the first hole (''zero'' position). See figure F7. Close the bottom door located below the sliding platform. The distance from the centerline of the calorimeter to the radiant panel surface at this point must be 7½ inches ± ⅛ (191 mm ± 3). Before igniting the radiant panel, ensure that the calorimeter face is clean and that there is water running through the calorimeter.

(2) Ignite the panel. Adjust the fuel/air mixture to achieve 1.5 BTUs/feet^2-second ± 5 percent (1.7 Watts/cm^2 ± 5 percent) at the ''zero'' position. If using an electric panel, set the power controller to achieve the proper heat flux. Allow the unit to reach steady state (this may take up to 1 hour). The pilot burner must be off and in the down position during this time.

(3) After steady-state conditions have been reached, move the calorimeter 2 inches (51 mm) from the ''zero'' position (first hole) to position 1 and record the heat flux. Move the calorimeter to position 2 and record the heat flux. Allow enough time at each position for the calorimeter to stabilize. Table 1 depicts typical calibration values at the three positions.

TABLE 1—CALIBRATION TABLE

Position	BTU/feet 2 sec	Watts/cm2
"Zero" Position	1.5	1.7
Position 1	1.51–1.50–1.49	1.71–1.70–1.69
Position 2	1.43–1.44	1.62–1.63

(4) Open the bottom door, remove the calorimeter and holder fixture. Use caution as the fixture is very hot.

(f) *Test Procedure.*

(1) Ignite the pilot burner. Ensure that it is at least 2 inches (51 mm) above the top of the platform. The burner may not contact the specimen until the test begins.

(2) Place the test specimen in the sliding platform holder. Ensure that the test sample surface is level with the top of the platform. At ''zero'' point, the specimen surface must be 7½ inches ± ⅛ inch (191 mm ± 3) below the radiant panel.

(3) Place the retaining/securing frame over the test specimen. It may be necessary (due to compression) to adjust the sample (up or down) in order to maintain the distance from the sample to the radiant panel (7½ inches ± ⅛ inch (191 mm ± 3) at ''zero'' position). With film/fiberglass assemblies, it is critical to make a slit in the film cover to purge any air inside. This allows the operator to maintain the proper test specimen position (level with the top of the platform) and to allow ventilation of gases during testing. A longitudinal slit, approximately 2 inches (51mm) in length, must be centered 3 inches ± ½ inch (76mm ± 13mm) from the left flange of the securing frame. A utility knife is acceptable for slitting the film cover.

(4) Immediately push the sliding platform into the chamber and close the bottom door.

(5) Bring the pilot burner flame into contact with the center of the specimen at the ''zero'' point and simultaneously start the timer. The pilot burner must be at a 27 degree angle with the sample and be approximately ½ inch (12 mm) above the sample. See figure F7. A stop, as shown in figure F8, allows the operator to position the burner correctly each time.

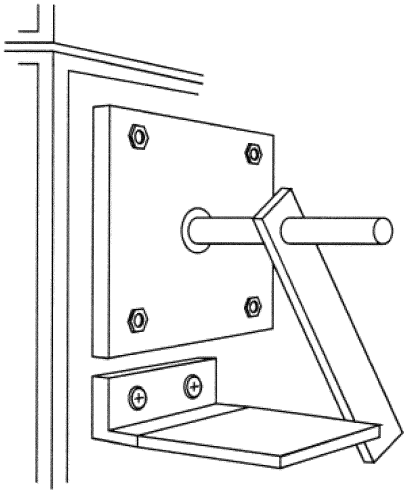

FIGURE F8—Propane Burner Stop

(6) Leave the burner in position for 15 seconds and then remove to a position at least 2 inches (51 mm) above the specimen.

(g) *Report.*

(1) Identify and describe the test specimen.

(2) Report any shrinkage or melting of the test specimen.

(3) Report the flame propagation distance. If this distance is less than 2 inches, report this as a pass (no measurement required).

(4) Report the after-flame time.

(h) *Requirements.*

(1) There must be no flame propagation beyond 2 inches (51 mm) to the left of the centerline of the pilot flame application.

(2) The flame time after removal of the pilot burner may not exceed 3 seconds on any specimen.

Issued in Washington, DC, on November 16, 2011.

J. Randolph Babbitt,

Administrator.

[FR Doc. 2011–30412 Filed 12–1–11; 8:45 am]

BILLING CODE 4910–13–P

Reader Aids

Federal Register

Vol. 76, No. 232

Friday, December 2, 2011

CUSTOMER SERVICE AND INFORMATION

Federal Register/Code of Federal Regulations	
General Information, indexes and other finding aids	**202–741–6000**
Laws	**741–6000**
Presidential Documents	
Executive orders and proclamations	**741–6000**
The United States Government Manual	**741–6000**
Other Services	
Electronic and on-line services (voice)	**741–6020**
Privacy Act Compilation	**741–6064**
Public Laws Update Service (numbers, dates, etc.)	**741–6043**
TTY for the deaf-and-hard-of-hearing	**741–6086**

ELECTRONIC RESEARCH

World Wide Web

Full text of the daily Federal Register, CFR and other publications is located at: **www.fdsys.gov.**

Federal Register information and research tools, including Public Inspection List, indexes, and links to GPO Access are located at: **www.ofr.gov.**

E-mail

FEDREGTOC-L (Federal Register Table of Contents LISTSERV) is an open e-mail service that provides subscribers with a digital form of the Federal Register Table of Contents. The digital form of the Federal Register Table of Contents includes HTML and PDF links to the full text of each document.

To join or leave, go to **http://listserv.access.gpo.gov** and select *Online mailing list archives, FEDREGTOC-L, Join or leave the list (or change settings);* then follow the instructions.

PENS (Public Law Electronic Notification Service) is an e-mail service that notifies subscribers of recently enacted laws.

To subscribe, go to **http://listserv.gsa.gov/archives/publaws-l.html** and select *Join or leave the list (or change settings);* then follow the instructions.

FEDREGTOC-L and **PENS** are mailing lists only. We cannot respond to specific inquiries.

Reference questions. Send questions and comments about the Federal Register system to: **fedreg.info@nara.gov**

The Federal Register staff cannot interpret specific documents or regulations.

Reminders. Effective January 1, 2009, the Reminders, including Rules Going Into Effect and Comments Due Next Week, no longer appear in the Reader Aids section of the Federal Register. This information can be found online at **http://www.regulations.gov.**

CFR Checklist. Effective January 1, 2009, the CFR Checklist no longer appears in the Federal Register. This information can be found online at **http://bookstore.gpo.gov/.**

FEDERAL REGISTER PAGES AND DATE, DECEMBER

74625–75426 1
75427–75770 2

CFR PARTS AFFECTED DURING DECEMBER

At the end of each month the Office of the Federal Register publishes separately a List of CFR Sections Affected (LSA), which lists parts and sections affected by documents published since the revision date of each title.

3 CFR

Administrative Orders:
Memorandums:
Memorandum of November 28, 2011 75423

7 CFR

761.....75427
763.....75427
764.....75427

8 CFR

280.....74625
1280.....74625

10 CFR

50.....74630
52.....74630

12 CFR

225.....74631
912.....74648
997.....74648
1780.....74648
1781.....74648
1782.....74648
1783.....74648
1784.....74648
1785.....74648
1786.....74648
1787.....74648
1788.....74648
1789.....74648
1790.....74648
1791.....74648
1792.....74648
1793.....74648
1794.....74648
1795.....74648
1796.....74648
1797.....74648
1798.....74648
1799.....74648

13 CFR

Proposed Rules:
121.....74749
125.....74749

14 CFR

23.....75736
25.....74649
27.....74655
29.....74655, 75435
39 .....74665, 74667, 74442
71 .....75445, 75446, 75447, 75448, 75449

Proposed Rules:
35.....74749

15 CFR

902.....74670

16 CFR

Proposed Rules:
Ch. II 75504

19 CFR

12.....74690, 74691

21 CFR

1314.....74696

29 CFR

4044.....74699

33 CFR

165.....75450
334.....75453

Proposed Rules:
117.....75505
334.....75508

34 CFR

99.....75604

37 CFR

1.....74700
381.....74703
386.....74703

38 CFR

9.....75458

Proposed Rules:
17.....75509

39 CFR

111.....74704, 75461

Proposed Rules:
501.....74753

40 CFR

52.....75464, 75467
63.....74708
261.....74709

Proposed Rules:
70.....74755
85.....74854
86.....74854
600.....74854

44 CFR

64.....74717

46 CFR

506.....74720

47 CFR

0.....74721
8.....74721
20.....74721
101.....74722

48 CFR

422.....74722

Proposed Rules:
215 75512
252 75512
422 74755

49 CFR

177 75470
383 75470
384 75470
390 75470
391 75470
392 75470
575 74723
Proposed Rules:
523 74854
531 74854
533 74854
536 74854
537 74854

50 CFR

622 75488
635 75492
640 75488
648 74724
660 74725
665 74747
679 74670
680 74670
Proposed Rules:
622 74757

LIST OF PUBLIC LAWS

This is a continuing list of public bills from the current session of Congress which have become Federal laws. It may be used in conjunction with "P L U S" (Public Laws Update Service) on 202–741–6043. This list is also available online at *http://www.archives.gov/federal-register/laws*.

The text of laws is not published in the **Federal Register** but may be ordered in "slip law" (individual pamphlet) form from the Superintendent of Documents, U.S. Government Printing Office, Washington, DC 20402 (phone, 202–512–1808). The text will also be made available on the Internet from GPO's Federal Digital System (FDsys) at *http://www.gpo.gov/fdsys*. Some laws may not yet be available.

H.R. 398/P.L. 112–58
To amend the Immigration and Nationality Act to toll, during active-duty service abroad in the Armed Forces, the periods of time to file a petition and appear for an interview to remove the conditional basis for permanent resident status, and for other purposes. (Nov. 23, 2011; 125 Stat. 747)

H.R. 2447/P.L. 112–59

To grant the congressional gold medal to the Montford Point Marines. (Nov. 23, 2011; 125 Stat. 749)

S. 1412/P.L. 112–60

To designate the facility of the United States Postal Service located at 462 Washington Street, Woburn, Massachusetts, as the "Officer John Maguire Post Office". (Nov. 23, 2011; 125 Stat. 752)

Last List November 25, 2011

Public Laws Electronic Notification Service (PENS)

PENS is a free electronic mail notification service of newly enacted public laws. To subscribe, go to *http://listserv.gsa.gov/archives/publaws-l.html*

Note: This service is strictly for E-mail notification of new laws. The text of laws is not available through this service. **PENS** cannot respond to specific inquiries sent to this address.