AUTHENTICATED
U.S. GOVERNMENT
INFORMATION
GPO

FEDERAL REGISTER

Vol. 77 Monday,

No. 38 February 27, 2012

Pages 11383–11736

OFFICE OF THE FEDERAL REGISTER

The **FEDERAL REGISTER** (ISSN 0097–6326) is published daily, Monday through Friday, except official holidays, by the Office of the Federal Register, National Archives and Records Administration, Washington, DC 20408, under the Federal Register Act (44 U.S.C. Ch. 15) and the regulations of the Administrative Committee of the Federal Register (1 CFR Ch. I). The Superintendent of Documents, U.S. Government Printing Office, Washington, DC 20402 is the exclusive distributor of the official edition. Periodicals postage is paid at Washington, DC.

The **FEDERAL REGISTER** provides a uniform system for making available to the public regulations and legal notices issued by Federal agencies. These include Presidential proclamations and Executive Orders, Federal agency documents having general applicability and legal effect, documents required to be published by act of Congress, and other Federal agency documents of public interest.

Documents are on file for public inspection in the Office of the Federal Register the day before they are published, unless the issuing agency requests earlier filing. For a list of documents currently on file for public inspection, see *www.ofr.gov.*

The seal of the National Archives and Records Administration authenticates the Federal Register as the official serial publication established under the Federal Register Act. Under 44 U.S.C. 1507, the contents of the **Federal Register** shall be judicially noticed.

The **Federal Register** is published in paper and on 24x microfiche. It is also available online at no charge at *www.fdsys.gov*, a service of the U.S. Government Printing Office.

The online edition of the **Federal Register** is issued under the authority of the Administrative Committee of the Federal Register as the official legal equivalent of the paper and microfiche editions (44 U.S.C. 4101 and 1 CFR 5.10). It is updated by 6:00 a.m. each day the **Federal Register** is published and includes both text and graphics from Volume 59, 1 (January 2, 1994) forward. For more information, contact the GPO Customer Contact Center, U.S. Government Printing Office. Phone 202-512-1800 or 866-512-1800 (toll free). E-mail, *gpo@custhelp.com.*

The annual subscription price for the **Federal Register** paper edition is $749 plus postage, or $808, plus postage, for a combined **Federal Register, Federal Register** Index and List of CFR Sections Affected (LSA) subscription; the microfiche edition of the **Federal Register** including the **Federal Register** Index and LSA is $165, plus postage. Six month subscriptions are available for one-half the annual rate. The prevailing postal rates will be applied to orders according to the delivery method requested. The price of a single copy of the daily **Federal Register,** including postage, is based on the number of pages: $11 for an issue containing less than 200 pages; $22 for an issue containing 200 to 400 pages; and $33 for an issue containing more than 400 pages. Single issues of the microfiche edition may be purchased for $3 per copy, including postage. Remit check or money order, made payable to the Superintendent of Documents, or charge to your GPO Deposit Account, VISA, MasterCard, American Express, or Discover. Mail to: U.S. Government Printing Office—New Orders, P.O. Box 979050, St. Louis, MO 63197-9000; or call toll free 1-866-512-1800, DC area 202-512-1800; or go to the U.S. Government Online Bookstore site, see *bookstore.gpo.gov.*

There are no restrictions on the republication of material appearing in the **Federal Register.**

How To Cite This Publication: Use the volume number and the page number. Example: 77 FR 12345.

Postmaster: Send address changes to the Superintendent of Documents, Federal Register, U.S. Government Printing Office, Washington, DC 20402, along with the entire mailing label from the last issue received.

SUBSCRIPTIONS AND COPIES

PUBLIC

Subscriptions:

Paper or fiche	**202–512–1800**
Assistance with public subscriptions	**202–512–1806**

General online information **202–512–1530; 1–888–293–6498**

Single copies/back copies:

Paper or fiche	**202–512–1800**
Assistance with public single copies	**1–866–512–1800 (Toll-Free)**

FEDERAL AGENCIES

Subscriptions:

Paper or fiche	**202–741–6005**
Assistance with Federal agency subscriptions	**202–741–6005**

FEDERAL REGISTER WORKSHOP

THE FEDERAL REGISTER: WHAT IT IS AND HOW TO USE IT

FOR: Any person who uses the Federal Register and Code of Federal Regulations.

WHO: Sponsored by the Office of the Federal Register.

WHAT: Free public briefings (approximately 3 hours) to present:

1. The regulatory process, with a focus on the Federal Register system and the public's role in the development of regulations.
2. The relationship between the Federal Register and Code of Federal Regulations.
3. The important elements of typical Federal Register documents.
4. An introduction to the finding aids of the FR/CFR system.

WHY: To provide the public with access to information necessary to research Federal agency regulations which directly affect them. There will be no discussion of specific agency regulations.

WHEN: Tuesday, March 13, 2012
9 a.m.–12:30 p.m.

WHERE: Office of the Federal Register
Conference Room, Suite 700
800 North Capitol Street, NW.
Washington, DC 20002

RESERVATIONS: (202) 741–6008

Printed on recycled paper.

Contents

Federal Register

Vol. 77, No. 38

Monday, February 27, 2012

Agriculture Department
See Animal and Plant Health Inspection Service
See Federal Crop Insurance Corporation
See Food and Nutrition Service
See Forest Service
NOTICES
Agency Information Collection Activities; Proposals, Submissions, and Approvals, 11480–11481

Animal and Plant Health Inspection Service
NOTICES
Agency Information Collection Activities; Proposals, Submissions, and Approvals:
Importation of Fresh (Frozen or Chilled) Pork or Pork Products Into the United States, 11481–11482
Importation of Nonfood Animal and Poultry Products and Byproducts into the United States, 11482–11483

Centers for Disease Control and Prevention
NOTICES
Agency Information Collection Activities; Proposals, Submissions, and Approvals, 11539–11547
Meetings:
Advisory Board on Radiation and Worker Health, 11547

Centers for Medicare & Medicaid Services
RULES
Medicaid Program; Review and Approval Process for Section 1115 Demonstrations, 11678–11700

Coast Guard
RULES
Safety Zones:
Lauderdale Air Show, Atlantic Ocean, Fort Lauderdale, FL, 11387–11390
PROPOSED RULES
Safety Zones:
Captain of the Port Lake Michigan, 11426–11434
Magothy River, Sillery Bay, MD, 11423–11426
Patapsco River, Northwest and Inner Harbors, Baltimore, MD, 11434–11437

Commerce Department
See International Trade Administration
See National Oceanic and Atmospheric Administration

Defense Department
See Navy Department
NOTICES
Agency Information Collection Activities; Proposals, Submissions, and Approvals, 11494–11495
Renewal of Federal Advisory Committees, 11495–11497

Education Department
NOTICES
Agency Information Collection Activities; Proposals, Submissions, and Approvals, 11499
Applications for New Awards:
Technology and Media Services for Individuals with Disabilities, etc., 11499–11505
Training and Information for Parents of Children with Disabilities, 11505–11514
Meetings:
National Advisory Council on Indian Education, 11514–11515

Employment and Training Administration
NOTICES
Funding Opportunities, Solicitations for Grant Applications:
Trade Adjustment Assistance Community College and Career Training Grants Program, 11592–11593

Energy Department
See Federal Energy Regulatory Commission
NOTICES
Applications to Export Electric Energy:
NRG Power Marketing LLC, 11515–11516
Pilot Power Group, Inc., 11515
Meetings:
Environmental Management Site-Specific Advisory Board, Paducah, 11516–11517
Rapid Response Team for Transmission, 11517–11518

Environmental Protection Agency
RULES
Delegation of National Emission Standards for Hazardous Air Pollutants for Source Categories:
Nevada, 11390–11394
Marine Sanitation Devices:
No Discharge Zone for California State Marine Waters, 11401–11411
Transportation Conformity:
MOVES Regional Grace Period Extension, 11394–11401
PROPOSED RULES
Approval and Promulgation of Air Quality Implementation Plans:
State of Georgia; Regional Haze State Implementation Plan, 11452–11476
Delegation of National Emission Standards for Hazardous Air Pollutants for Source Categories:
Nevada, 11476–11477
NOTICES
Inventory of U.S. Greenhouse Gas Emissions and Sinks, 1990–2010; Availability, 11533
Settlements:
Anniston PCB Superfund Site, Anniston, AL, 11533

Export-Import Bank
NOTICES
Agency Information Collection Activities; Proposals, Submissions, and Approvals, 11533–11534

Federal Aviation Administration
RULES
Security Considerations for Lavatory Oxygen Systems, 11385–11387
PROPOSED RULES
Airworthiness Directives:
Boeing Co. Airplanes, 11416–11418
Pratt & Whitney Canada, Auxiliary Power Units, 11421–11423
Various Transport Category Airplanes, 11418–11421

NOTICES
Meetings:
Executive Committee of Aviation Rulemaking Advisory Committee, 11620

Federal Crop Insurance Corporation
NOTICES
Agency Information Collection Activities; Proposals, Submissions, and Approvals, 11483–11484

Federal Election Commission
NOTICES
Meetings; Sunshine Act, 11534

Federal Energy Regulatory Commission
NOTICES
Agency Information Collection Activities; Proposals, Submissions, and Approvals, 11518–11521
Applications:
ANR Pipeline Co., 11521–11522
Bryant Mountain, LLC, 11523–11524
Dominion Transmission, Inc., 11522–11523
Walden, CO, 11524–11525
Combined Filings, 11525–11526
Environmental Assessments; Availability, etc.:
Bluewater Gas Storage, LLC, St. Clair River Crossing Replacement Project, 11527–11529
Ken Willis, 11526
Petitions for Declaratory Orders:
Louisville Gas and Electric Co. and Kentucky Utilities Co., 11529
Preliminary Permit Applications:
Nushagak Electric and Telephone Cooperative, Inc., 11529–11530
Preliminary Permit Drawings:
Riverbank Hydro No. 2, LLC, et al., 11530
Proceedings:
Citizens Sunrise Transmission LLC and Citizens Energy Corp., 11530
Requests Under Blanket Authorizations:
Port Barre Investments, LLC, 11530
Revocations of Market-Based Rate Tariffs:
Electric Quarterly Reports, Acacia Energy, Inc., LBPC Power, Inc., et al., 11531
Staff Attendances, 11531
Staff Attendances:
ISO New England Inc. and New England Power Pool Meetings, 11532
Transfers of Exemptions:
Algonquin Power Co. and Abenaki Timber Corp., 11532

Federal Register Office
PROPOSED RULES
Incorporation by Reference, 11414–11416

Federal Register, Administrative Committee
See Federal Register Office

Federal Retirement Thrift Investment Board
RULES
Change of Address and Electronic Submission of FOIA Requests, 11383–11384
NOTICES
Privacy Act; Systems of Records, 11534–11536

Federal Transit Administration
NOTICES
Agency Information Collection Activities; Proposals, Submissions, and Approvals, 11620–11621

Food and Drug Administration
NOTICES
Agency Information Collection Activities; Proposals, Submissions, and Approvals:
Experimental Study on Consumer Responses to Whole Grain Labeling Statements on Food Packages, 11547–11550
Draft Guidance for Industry; Availability:
Notification of Issues That May Result in a Prescription Drug Shortage, 11550–11553
Draft Guidance; Availability:
Oversight of Positron Emission Tomography Drug Products, 11553–11554
Final Decisions; Availability:
Withdrawal of Breast Cancer Indication for AVASTIN (Bevacizumab), 11554–11555
Guidance for Institutional Review Boards, Clinical Investigators, and Sponsors; Availability:
Institutional Review Board Continuing Review After Clinical Investigation Approval, 11555–11556
Pediatric Studies of Meropenem, 11556–11557

Food and Nutrition Service
NOTICES
Agency Information Collection Activities; Proposals, Submissions, and Approvals:
Negative QC Review Schedule, Status of Sample Selection of Completion, 11484–11485

Foreign Assets Control Office
RULES
Iranian Financial Sanctions Regulations, 11724–11735

Forest Service
NOTICES
Meetings:
Lake Tahoe Basin Federal Advisory Committee, 11485

Geological Survey
NOTICES
Agency Information Collection Activities; Proposals, Submissions, and Approvals, 11565–11566

Health and Human Services Department
See Centers for Disease Control and Prevention
See Centers for Medicare & Medicaid Services
See Food and Drug Administration
See Health Resources and Services Administration
See Indian Health Service
See National Institutes of Health
RULES
Application, Review, and Reporting Process for Waivers for State Innovation, 11700–11721
NOTICES
Federal Agency Responses; Availability:
Recommendations on the Use of the Murine Local Lymph Node Assay for Potency Categorization of Chemicals, etc., 11536–11538
Findings of Research Misconduct, 11538–11539

Health Resources and Services Administration
NOTICES
Request for Nominations:
National Advisory Council on the National Health Service Corps, 11557

Homeland Security Department
See Coast Guard

Housing and Urban Development Department
NOTICES
Agency Information Collection Activities; Proposals, Submissions, and Approvals:
Local Appeals to Single-Family Mortgage Limits, 11563–11564

Indian Health Service
NOTICES
Agency Information Collection Activities; Proposals, Submissions, and Approvals:
Loan Repayment Program, 11558

Interior Department
See Geological Survey
See Land Management Bureau
See National Park Service
See Reclamation Bureau
NOTICES
Draft Policies; Availability:
Consultation with Alaska Native Claims Settlement Act Corporations, 11564
Meetings:
National Commission on Indian Trust Administration and Reform, 11565

International Trade Administration
NOTICES
Antidumping Duty Administrative Reviews; Results, Extensions, Amendments, etc.:
Certain Pasta from Turkey, 11485–11486
Fresh Garlic from the People's Republic of China, 11486–11489
Honey from the People's Republic of China, 11489–11490
Initiation of Antidumping and Countervailing Duty Administrative Reviews, 11490–11492

International Trade Commission
NOTICES
Investigations:
Advice Concerning Possible Modifications to the U.S. Generalized System of Preferences, etc., 11589–11591
Certain Dimmable Compact Fluorescent Lamps and Products Containing Same, 11587–11588
Certain Electronic Devices for Capturing and Transmitting Images and Components Thereof, 11588–11589
Certain Toner Cartridges and Components Thereof, 11586–11587
Investigations; Terminations, Modifications and Rulings:
Certain Ground Fault Circuit Interrupters and Products Containing Same, 11591–11592

Labor Department
See Employment and Training Administration
See Labor Statistics Bureau

Labor Statistics Bureau
NOTICES
Agency Information Collection Activities; Proposals, Submissions, and Approvals, 11593

Land Management Bureau
NOTICES
Meetings:
State of Arizona Resource Advisory Council, 11566
Wyoming Resource Advisory Council, 11566–11567

Morris K. Udall Scholarship and Excellence in National Environmental Policy Foundation
NOTICES
Agency Information Collection Activities; Proposals, Submissions, and Approvals, 11594

National Archives and Records Administration
See Federal Register Office

National Council on Disability
NOTICES
Meetings; Sunshine Act, 11594

National Highway Traffic Safety Administration
RULES
Anthropomorphic Test Devices:
Hybrid III 10-Year-Old Child Test Dummy, 11651–11676
Federal Motor Vehicle Safety Standards:
Child Restraint Systems, 11626–11651
NOTICES
Agency Information Collection Activities; Proposals, Submissions, and Approvals, 11621–11624

National Institutes of Health
NOTICES
Agency Information Collection Activities; Proposals, Submissions, and Approvals:
DERT Extramural Grantee Data Collection, 11559–11560
STAR METRICS, 11558–11559
Government-Owned Inventions; Availability for Licensing, 11560–11562
Meetings:
National Institute of Dental and Craniofacial Research, 11563
National Institute of General Medical Sciences, 11562–11563
National Institute on Aging, 11563
National Institute on Deafness and Other Communication Disorders, 11562

National Oceanic and Atmospheric Administration
RULES
Fisheries of the Caribbean, Gulf of Mexico, and South Atlantic:
Coastal Migratory Pelagic Resources of the Gulf of Mexico and South Atlantic, 11411–11412
Fisheries of the Exclusive Economic Zone Off Alaska:
Pacific Cod by Catcher Vessels Using Trawl Gear in the Western Regulatory Area of the Gulf of Alaska, 11412–11413
PROPOSED RULES
Fisheries of the Caribbean, Gulf of Mexico, and South Atlantic:
Snapper-Grouper Fishery off the Southern Atlantic States; Amendment 24, 11477–11479
NOTICES
Environmental Assessments; Availability, etc.:
Incidental Harassment Authorizations in the U.S. Beaufort and Chukchi Seas, 11492
Taking of Threatened or Endangered Marine Mammals Incidental to Commercial Fishing Operations; Listing of Fisheries, 11493–11494

National Park Service
NOTICES
Extensions of Visitor Services:
Mount Rainier National Park, 11567

Intent to Repatriate Cultural Items:
American Museum of Natural History, New York, NY, 11567–11568
Army Corps of Engineers, Walla Walla District, Walla Walla, WA, and University of Oregon Museum of Natural and Cultural History, Eugene, OR, 11568–11569
Forest Service, Coconino National Forest, Flagstaff, AZ, 11569–11571
Fowler Museum at UCLA, Los Angeles, CA, 11571–11572
Gila National Forest, Silver City, NM; Arizona State Museum, University of Arizona, Tucson, AZ; et al.; Correction, 11571
Inventory Completions:
Army Corps of Engineers, Walla Walla District, Walla Walla, WA, and University of Oregon Museum of Natural and Cultural History, Eugene, OR, 11576–11577
Bishop Museum, Honolulu, HI, 11572–11573
Bureau of Indian Affairs, Washington, DC, and the Arizona State Museum, University of Arizona, Tucson, AZ, 11578–11582
Bureau of Indian Affairs, Washington, DC, Arizona State Museum, University of Arizona, Tucson, AZ; Correction, 11577–11578
Central Washington University Department of Anthropology, Ellensburg, WA, 11582–11583
Gila National Forest, Silver City, NM and Field Museum of Natural History, Chicago, IL, 11584
Grand Rapids Public Museum, Grand Rapids, MI, 11575–11576
History Colorado, Denver, CO, 11573–11575
San Diego State University, San Diego, CA; Correction, 11583–11584
National Register of Historic Places; Pending Nominations and Related Actions, 11584–11585

National Science Foundation
NOTICES
Buy American Waivers Under the American Recovery and Reinvestment Act, 11595–11596

Navy Department
NOTICES
Environmental Impact Statements; Availability, etc.:
Military Readiness Activities in the Northwest Training and Testing Study Area, 11497–11499

Nuclear Regulatory Commission
RULES
Removal of Oman from the Restricted Destinations List, 11384–11385
NOTICES
Applications Regarding Proposed Acquisitions:
Central Vermont Public Service Corp., Millstone Power Station, Unit 3, 11596–11598
Thermal Overload Protection for Electric Motors on Motor-Operated Valves, 11598–11599

Personnel Management Office
RULES
Prevailing Rate Systems:
Abolishment of Monmouth, NJ, as a Nonappropriated Fund Federal Wage System Wage Area, 11383
NOTICES
January 2012 Pay Schedules, 11599–11600
Meetings:
National Council on Federal Labor-Management Relations, 11600

Postal Service
PROPOSED RULES
Inspection Service Authority; Seizure and Forfeiture, 11437–11452

Railroad Retirement Board
NOTICES
Agency Information Collection Activities; Proposals, Submissions, and Approvals, 11600–11601

Reclamation Bureau
NOTICES
Environmental Impact Statements; Availability, etc.:
Wayne N. Aspinall Unit, Colorado River Storage Project, Gunnison River, CO, 11585–11586

Securities and Exchange Commission
NOTICES
Agency Information Collection Activities; Proposals, Submissions, and Approvals, 11601–11602
Self-Regulatory Organizations; Proposed Rule Changes:
BATS Exchange, Inc., 11608–11611
ICE Clear Europe Limited, 11607–11608
International Securities Exchange, LLC, 11614–11615
NASDAQ OMX PHLX LLC, 11606, 11611–11613, 11615–11617
NASDAQ Stock Market LLC, 11602–11606
Suspension of Trading Orders:
Jetronic Industries, Inc., JMAR Technologies, Inc., et al., 11617
PGI Energy, Inc., 11617

Small Business Administration
NOTICES
Agency Information Collection Activities; Proposals, Submissions, and Approvals, 11617–11618
Exemptions Sought:
Solutions Capital I, LP, 11618

Transportation Department
See Federal Aviation Administration
See Federal Transit Administration
See National Highway Traffic Safety Administration
NOTICES
Additional Guidance on Airfare and Air Tour Price Advertisements, 11618–11620

Treasury Department
See Foreign Assets Control Office
RULES
Application, Review, and Reporting Process for Waivers for State Innovation, 11700–11721

Separate Parts In This Issue

Part II
Transportation Department, National Highway Traffic Safety Administration, 11626–11676

Part III
Health and Human Services Department, Centers for Medicare & Medicaid Services, 11678–11700
Health and Human Services Department, 11700–11721
Treasury Department, 11700–11721

Part IV
Treasury Department, Foreign Assets Control Office, 11724–11735

Reader Aids

Consult the Reader Aids section at the end of this page for phone numbers, online resources, finding aids, reminders, and notice of recently enacted public laws.

To subscribe to the Federal Register Table of Contents LISTSERV electronic mailing list, go to http://listserv.access.gpo.gov and select Online mailing list archives, FEDREGTOC-L, Join or leave the list (or change settings); then follow the instructions.

CFR PARTS AFFECTED IN THIS ISSUE

A cumulative list of the parts affected this month can be found in the Reader Aids section at the end of this issue.

1 CFR

Proposed Rules:

51 11414

5 CFR

532 11383
1630 11383
1631 11383
1632 11383

10 CFR

110 11384

14 CFR

21 11385
25 11385
121 11385
129 11385

Proposed Rules:

39 (3 documents) 11416, 11418, 11421

31 CFR

33 11700
561 11724

33 CFR

165 11387

Proposed Rules:

165 (3 documents) 11423, 11426, 11434

39 CFR

Proposed Rules:

233 11437

40 CFR

63 11390
93 11394
140 11401

Proposed Rules:

52 11452
63 11476

42 CFR

431 11678

45 CFR

155 11700

49 CFR

571 11626
572 11651

50 CFR

622 11411
679 11412

Proposed Rules:

622 11477

Rules and Regulations

Federal Register
Vol. 77, No. 38
Monday, February 27, 2012

This section of the FEDERAL REGISTER contains regulatory documents having general applicability and legal effect, most of which are keyed to and codified in the Code of Federal Regulations, which is published under 50 titles pursuant to 44 U.S.C. 1510.

The Code of Federal Regulations is sold by the Superintendent of Documents. Prices of new books are listed in the first FEDERAL REGISTER issue of each week.

OFFICE OF PERSONNEL MANAGEMENT

5 CFR Part 532

RIN 3206–AM49

Prevailing Rate Systems; Abolishment of Monmouth, NJ, as a Nonappropriated Fund Federal Wage System Wage Area

AGENCY: U.S. Office of Personnel Management.

ACTION: Final rule.

SUMMARY: The U.S. Office of Personnel Management is issuing a final rule to abolish the Monmouth, New Jersey, nonappropriated fund (NAF) Federal Wage System (FWS) wage area and redefine Monmouth County, NJ, to the Burlington, NJ, NAF wage area. These changes are necessary because the closure of Fort Monmouth left the Monmouth wage area without an activity having the capability to conduct a local wage survey.

DATES: *Effective date:* This regulation is effective on February 27, 2012.

FOR FURTHER INFORMATION CONTACT: Madeline Gonzalez, (202) 606–2838; email *pay-leave-policy@opm.gov;* or Fax: (202) 606–4264.

SUPPLEMENTARY INFORMATION: On August 25, 2011, the U.S. Office of Personnel Management (OPM) issued an interim rule (76 FR 53045) to abolish the Monmouth, New Jersey, nonappropriated fund (NAF) Federal Wage System (FWS) wage area and redefine Monmouth County, NJ, to the Burlington, NJ, NAF wage area. FWS employees remaining in the Monmouth wage area were transferred to the Burlington wage area schedule on the first day of the first applicable pay period beginning on or after October 15, 2011. The Federal Prevailing Rate Advisory Committee, the national labor-management committee responsible for advising OPM on matters concerning the pay of FWS employees, reviewed and recommended these changes by consensus. The interim rule had a 30-day comment period, during which OPM received no comments.

Regulatory Flexibility Act

I certify that these regulations will not have a significant economic impact on a substantial number of small entities because they will affect only Federal agencies and employees.

List of Subjects in 5 CFR Part 532

Administrative practice and procedure, Freedom of information, Government employees, Reporting and recordkeeping requirements, Wages.

U.S. Office of Personnel Management.

John Berry,

Director.

Accordingly, under the authority of 5 U.S.C. 5343, the interim rule published on August 25, 2011, amending 5 CFR part 532 (76 FR 53045) is adopted as final with no changes.

[FR Doc. 2012–4548 Filed 2–24–12; 8:45 am]

BILLING CODE 6325–39–P

FEDERAL RETIREMENT THRIFT INVESTMENT BOARD

5 CFR Parts 1630, 1631, and 1632

Change of Address and Electronic Submission of FOIA Requests

AGENCY: Federal Retirement Thrift Investment Board.

ACTION: Direct final rule.

SUMMARY: The Federal Retirement Thrift Investment Board (Agency) is amending its regulations to reflect its new office address and to permit Freedom of Information Act (FOIA) requests via electronic mail and facsimile.

DATES: This rule is effective April 12, 2012 without further action, unless adverse comment is received by March 28, 2012. If adverse comment is received, the Federal Retirement Thrift Investment Board will publish a timely withdrawal of the rule in the **Federal Register**.

FOR FURTHER INFORMATION CONTACT: Amanda Haas at 202–942–1660.

SUPPLEMENTARY INFORMATION: The Agency administers the Thrift Savings Plan (TSP), which was established by the Federal Employees' Retirement System Act of 1986 (FERSA), Public Law 99–335, 100 Stat. 514. The TSP provisions of FERSA are codified, as amended, largely at 5 U.S.C. 8351 and 8401–79. The TSP is a tax-deferred retirement savings plan for Federal civilian employees and members of the uniformed services. The TSP is similar to cash or deferred arrangements established for private-sector employees under section 401(k) of the Internal Revenue Code (26 U.S.C. 401(k)).

Address Change

The Agency has moved its headquarters to a new location in Washington, DC. This amendment to the Agency's regulations revises all references to the location of the Agency to reflect its new address.

Electronic Submission of Freedom of Information Act Requests

Section 1631.6(a) currently permits submission of FOIA requests by postal mail only. The Agency is amending section 1631.6(a) to permit submission of FOIA requests by electronic mail and facsimile.

Regulatory Flexibility Act

I certify that this regulation will not have a significant economic impact on a substantial number of small entities. This regulation will primarily affect Federal employees and members of the uniformed services who participate in the Thrift Savings Plan, which is a Federal defined contribution retirement savings plan created under the Federal Employees' Retirement System Act of 1986 (FERSA), Public Law 99–335, 100 Stat. 514, and which is administered by the Agency.

Paperwork Reduction Act

I certify that these regulations do not require additional reporting under the criteria of the Paperwork Reduction Act.

Unfunded Mandates Reform Act of 1995

Pursuant to the Unfunded Mandates Reform Act of 1995, 2 U.S.C. 602, 632, 653, 1501–1571, the effects of this regulation on state, local, and tribal governments and the private sector have been assessed. This regulation will not compel the expenditure in any one year of $100 million or more by state, local, and tribal governments, in the aggregate, or by the private sector. Therefore, a

statement under section 1532 is not required.

Submission to Congress and the General Accounting Office

Pursuant to 5 U.S.C. 810(a)(1)(A), the Agency submitted a report containing this rule and other required information to the U.S. Senate, the U.S. House of Representatives, and the Comptroller General of the United States before publication of this rule in the **Federal Register**. This rule is not a major rule as defined at 5 U.S.C. 804(2).

List of Subjects

5 CFR Part 1630

Privacy.

5 CFR Part 1631

Courts, Freedom of information, Government employees.

5 CFR Part 1632

Sunshine Act.

Gregory T. Long,

Executive Director, Federal Retirement Thrift Investment Board.

For the reasons stated in the preamble, the Agency amends 5 CFR chapter VI as follows:

PART 1630—PRIVACY ACT REGULATIONS

■ 1. The authority citation for part 1630 continues to read as follows:

Authority: 5 U.S.C. 552a.

■ 2. Amend § 1630.4(b) by removing ''1250 H Street, NW., Washington, DC 20005'' and adding in its place ''77 K Street, NE., Suite 1000, Washington, DC 20002''.

■ 3. Amend § 1630.13(a) by removing ''1250 H Street, NW., Washington, DC 20005'' and adding in its place ''77 K Street, NE., Suite 1000, Washington, DC 20002''.

PART 1631—AVAILABILITY OF RECORDS

■ 4. The authority citation for part 1631 continues to read as follows:

Authority: 5 U.S.C. 552.

■ 5. Amend § 1631.3(b) by removing ''1250 H Street, NW., Washington, DC 20005'' and adding in its place ''77 K Street, NE., Suite 1000, Washington, DC 20002''.

■ 6. Amend § 1631.4(a) by removing ''room 4308 at 1250 H Street, NW., Washington, DC'' and adding in its place ''room 11–019 at 77 K Street, NE., Suite 1000, Washington, DC 20002''.

■ 7. Amend § 1631.6 by revising paragraph (a) to read as follows:

§ 1631.6 How to request records—form and content.

(a) A request made under the FOIA may be submitted by one of the following methods:

(1) In writing addressed to FOIA Officer, Federal Retirement Thrift Investment Board, 77 K Street NE., Suite 1000, Washington, DC 20002. The words ''FOIA Request'' must be clearly marked on both the letter and the envelope.

(2) By electronic mail at *FOIAREQUEST@tsp.gov.* The subject must include the words ''FOIA Request.''

(3) By facsimile, Attn: FOIA Officer, at (202) 942–1776. The facsimile must be clearly marked with the words ''FOIA Request.''

* * * * *

■ 8. Amend § 1631.10(a) by removing ''1250 H Street, NW., Washington, DC 20005'' and adding in its place ''77 K Street, NE., Suite 1000, Washington, DC 20002''.

PART 1632—RULES REGARDING PUBLIC OBSERVATION OF MEETINGS

■ 9. The authority citation for part 1632 continues to read as follows:

Authority: 5 U.S.C. 552b and 5 U.S.C. 8474.

■ 10. Amend § 1632.4(c) by removing ''1250 H Street, NW., Washington, DC 20005'' and adding in its place ''77 K Street, NE., Suite 1000, Washington, DC 20002''.

■ 11. Amend § 1632.11(b) by removing ''1250 H Street, NW., Washington, DC 20005'' and adding in its place ''77 K Street, NE., Suite 1000, Washington, DC 20002.''

[FR Doc. 2012–4491 Filed 2–24–12; 8:45 am]

BILLING CODE 6760–01–P

NUCLEAR REGULATORY COMMISSION

10 CFR Part 110

[NRC–2011–0264]

RIN 3150–AJ06

Removal of Oman from the Restricted Destinations List

AGENCY: Nuclear Regulatory Commission.

ACTION: Final rule.

SUMMARY: The U.S. Nuclear Regulatory Commission (NRC or the Commission) is amending its export and import regulations by removing Oman from the list of restricted destinations. This amendment is necessary to conform the NRC's regulations with U.S. Government foreign policy.

DATES: The final rule is effective February 27, 2012.

ADDRESSES: You can access publicly available documents related to this final rule using the following methods:

• *NRC's Public Document Room (PDR):* The public may examine and have copied, for a fee, publicly available documents at the NRC's PDR, Room O1–F21, One White Flint North, 11555 Rockville Pike, Rockville, Maryland 20852.

• *NRC's Agencywide Documents Access and Management System (ADAMS):* Publicly available documents created or received at the NRC are available online in the NRC Library at *http://www.nrc.gov/reading-rm/adams.html.* From this page, the public can gain entry into ADAMS, which provides text and image files of the NRC's public documents. If you do not have access to ADAMS or if there are problems in accessing the documents located in ADAMS, contact the NRC's PDR reference staff at 1–800–397–4209, 301–415–4737, or by email to *pdr.resource@nrc.gov.*

• *Federal Rulemaking Web Site:* Supporting materials related to this final rule can be found at *http://www.regulations.gov* by searching on Docket ID NRC–2011–0264. Address questions about NRC dockets to Carol Gallagher, telephone: 301–492–3668; email: *Carol.Gallagher@nrc.gov.*

FOR FURTHER INFORMATION CONTACT: Brooke G. Smith, Senior International Policy Analyst, Office of International Programs, U.S. Nuclear Regulatory Commission, Washington, DC 20555–0001; telephone: 301–415–2347, email: *brooke.smith@nrc.gov.*

SUPPLEMENTARY INFORMATION:

I. Background

The purpose of this final rule is to revise the NRC's export and import regulations in Title 10 of the *Code of Federal Regulations* (10 CFR) Part 110, ''Export and Import of Nuclear Equipment and Material,'' with regard to U.S. Government law and policy on Oman. The Executive Branch recommended, in light of current foreign policy and nonproliferation-related actions taken and polices pursued by the Government of Oman, that the NRC amend Part 110 to remove Oman from the list of restricted destinations in § 110.29. This means that exports of certain nuclear and byproduct materials to Oman may qualify for the NRC general license specified in §§ 110.21 through 110.24.

At present, Oman has no nuclear research or power program; however, Oman does have the need for radioactive sources for legitimate industrial, medical, and research purposes in support of important economic and commercial development projects. Exports of radioactive sources from the United States for such purposes would be facilitated by removal of Oman from the restricted destinations list in Part 110.

The NRC staff has determined that removing Oman from the restricted destinations list is consistent with current U.S. law and policy, and will pose no unreasonable risk to the public health and safety or to the common defense and security of the United States

Because this rule involves a foreign affairs function of the United States, the notice and comment provisions of the Administrative Procedure Act do not apply (5 U.S.C. 553(a)(1)). This rule will become effective immediately upon publication.

II. Voluntary Consensus Standards

The National Technology Transfer and Advancement Act of 1995 (Pub. L. 104–113) requires that Federal Agencies use technical standards that are developed or adopted by voluntary consensus standards bodies unless, using such a standard is inconsistent with applicable law or otherwise impractical. This final rule does not constitute the establishment of a standard for which the use of a voluntary consensus standard would be applicable.

III. Environmental Impact: Categorical Exclusion

The NRC has determined that this final rule is the type of action described in categorical exclusion 10 CFR 51.22(c)(1). Therefore, neither an environmental impact statement nor an environmental assessment has been prepared for the rule.

IV. Paperwork Reduction Act Statement

This final rule does not contain new or amended information collection requirements subject to the Paperwork Reduction Act of 1995 (44 U.S.C. 3501 *et seq.*). Existing requirements were approved by the Office of Management and Budget (OMB), Approval Number 3150–0036.

Public Protection Notification

The NRC may not conduct or sponsor, and a person is not required to respond to, a request for information or an information collection requirement unless the requesting document displays a currently valid OMB control number.

V. Regulatory Analysis

Removal of Oman from the restricted destinations list in § 110.29 means that exports of certain radioactive materials to Oman may qualify for the NRC general license specified in §§ 110.21 through 110.24. There is no alternative to amending the regulations for the export and import of nuclear equipment and materials. This final rule is expected to have no changes in the information collection burden or cost to the public.

VI. Regulatory Flexibility Certification

As required by the Regulatory Flexibility Act of 1980 (5 U.S.C. 605(b)), the Commission certifies that this final rule will not have a significant economic impact on a substantial number of small entities. This rule affects only companies exporting nuclear equipment and materials to Oman which do not fall within the scope of the definition of ''small entities'' set forth in the Regulatory Flexibility Act (5 U.S.C. 601(3)), or the Size Standards established by the NRC (10 CFR 2.810).

VII. Backfit Analysis

The NRC has determined that a backfit analysis is not required for this rule, because these amendments do not include any provisions that would impose backfits as defined in 10 CFR Chapter I.

VIII. Congressional Review Act

Under the Congressional Review Act of 1996, the NRC has determined that this action is not a major rule and has verified this determination with the Office of Information and Regulatory Affairs of OMB.

List of Subjects in 10 CFR Part 110

Administrative practice and procedure, Classified information, Criminal penalties, Export, Import, Intergovernmental relations, Nuclear materials, Nuclear power plants and reactors, Reporting and recordkeeping requirements, Scientific equipment.

For the reasons set out in the preamble and under the authority of the Atomic Energy Act of 1954, as amended, the Energy Reorganization Act of 1974, as amended, and 5 U.S.C. 552 and 553, the NRC is adopting the following amendments to 10 CFR part 110.

PART 110—EXPORT AND IMPORT OF NUCLEAR EQUIPMENT AND MATERIAL

■ 1. The authority citation for part 110 continues to read as follows:

Authority: Secs. 51, 53, 54, 57, 63, 64, 65, 81, 82, 103, 104, 109, 111, 126, 127, 128, 129, 161, 181, 182, 183, 187, 189, 68 Stat. 929, 930, 931, 932, 933, 936, 937, 948, 953, 954, 955, 956, as amended (42 U.S.C. 2071, 2073, 2074, 2077, 2092–2095, 2111, 2112, 2133, 2134, 2139, 2139a, 2141, 2154–2158, 2201, 2231–2233, 2237, 2239); sec. 201, 88 Stat. 1242, as amended (42 U.S.C. 5841; sec. 5, Pub. L. 101–575, 104 Stat 2835 (42 U.S.C. 2243); sec. 1704, 112 Stat. 2750 (44 U.S.C. 3504 note); Energy Policy Act of 2005; Pub. L. 109–58, 119 Stat. 594 (2005).

Sections 110.1(b)(2) and 110.1(b)(3) also issued under Pub. L. 96–92, 93 Stat. 710 (22 U.S.C. 2403). Section 110.11 also issued under sec. 122, 68 Stat. 939 (42 U.S.C. 2152) and secs. 54c and 57d, 88 Stat. 473, 475 (42 U.S.C. 2074). Section 110.27 also issued under sec. 309(a), Pub. L. 99–440. Section 110.50(b)(3) also issued under sec. 123, 92 Stat. 142 (42 U.S.C. 2153). Section 110.51 also issued under sec. 184, 68 Stat. 954, as amended (42 U.S.C. 2234). Section 110.52 also issued under sec. 186, 68 Stat. 955 (42 U.S.C. 2236). Sections 110.80–110.113 also issued under 5 U.S.C. 552, 554. Sections 110.130–110.135 also issued under 5 U.S.C. 553. Sections 110.2 and 110.42(a)(9) also issued under sec. 903, Pub. L. 102–496 (42 U.S.C. 2151 *et seq.*).

§ 110.29 [Amended]

■ 2. Section 110.29 is amended by removing ''Oman'' from the list of restricted destinations.

Dated at Rockville, Maryland, this 14th day of February 2012.

For the Nuclear Regulatory Commission.

Michael F. Weber,

Acting Executive Director for Operations.

[FR Doc. 2012–4556 Filed 2–24–12; 8:45 am]

BILLING CODE 7590–01–P

DEPARTMENT OF TRANSPORTATION

Federal Aviation Administration

14 CFR Parts 21, 25, 121, and 129

[Docket No. FAA–2011–0186; Amdt. Nos. 21–94, 25–133, 121–354, 129–50; SFAR 111]

RIN 2120–AJ92

Security Considerations for Lavatory Oxygen Systems

AGENCY: Federal Aviation Administration (FAA), DOT.

ACTION: Interim final rule; disposition of comments.

SUMMARY: On March 8, 2011, the FAA published an interim final rule, request

for comments (Amendment Nos. 21–94, 25–133, 121–354, 129–50; SFAR 111) on security considerations for lavatory oxygen systems (77 FR 12550). The interim final rule addresses a security vulnerability and is needed so the affected airplanes can continue operating until the non-compliance to airworthiness standards and operating rules is resolved. We sought public comment on the interim final rule even though it became effective upon publication. This action responds to the public comments the FAA received.

ADDRESSES: You may review the public docket for this rulemaking (Docket No. FAA–2011–0186) at the Docket Management Facility in Room W12–140 of the West Building Ground Floor at 1200 New Jersey Avenue SE., Washington, DC, 20590–0001 between 9 a.m. and 5 p.m., Monday through Friday, except Federal holidays. You may also review the public docket on the Internet at *http://www.regulations.gov*.

FOR FURTHER INFORMATION CONTACT: For technical questions concerning this action, contact Jeff Gardlin, Airframe and Cabin Safety Branch, ANM–115, Transport Airplane Directorate, Aircraft Certification Service, Federal Aviation Administration, Northwest Mountain Region, 1601 Lind Avenue SW., Renton, WA 98057–3356; telephone: (425) 227–2136; email: *jeff.gardlin@faa.gov*.

For legal questions concerning this action, contact Douglas Anderson, Federal Aviation Administration, Office of the Regional Counsel, ANM–7, Northwest Mountain Region, 1601 Lind Avenue SW., Renton, WA 98057–3356; telephone: (425) 227–2166; email: *douglas.anderson@faa.gov*.

SUPPLEMENTARY INFORMATION:

Background

The FAA became aware of a security vulnerability with certain types of oxygen systems installed inside the lavatories of most transport category airplanes. As a result, the FAA issued Airworthiness Directive (AD) 2011–04–09, which mandated that these oxygen systems be rendered inoperative until the vulnerability could be eliminated. However, by completing the mandated actions in AD 2011–04–09, operators were no longer in compliance with the requirements of Title 14, Code of Federal Regulations (14 CFR) 25.1447, 121.329, and 121.333, and could not legally continue flight operations. AD 2011–04–09 also affects newly manufactured airplanes and airplanes undergoing other modification. The Special Federal Aviation Regulation (SFAR) is needed to address the security vulnerability and allow the affected operators to continue flight operations until the non-compliance to airworthiness standards and operating rules created by the AD is resolved.

The FAA chartered an Aviation Rulemaking Committee (ARC) primarily comprised of industry representatives in March 2011. The ARC's purpose was to recommend regulatory changes and guidance that could be used to restore oxygen in affected lavatories while addressing the security vulnerability. The ARC submitted its recommendations to the FAA on August 3, 2011. The FAA is reviewing the recommendations and will initiate additional rulemaking as necessary. The recommendations will facilitate developing future rulemaking to address existing and new certifications of aircraft. As stated in SFAR 111, we envision a two- to four-year regulatory process to restore the affected oxygen systems to their full operational capability. Complete restoration includes any new regulatory changes, as well as incorporating any new oxygen system designs into airplanes currently in service.

Discussion of Comments

The FAA received comments from ten commenters: Aerox Aviation Oxygen Systems, Inc., The Boeing Company, and eight private citizens. Boeing and three citizens supported the SFAR with the overall assertion that removing chemical oxygen generators from the lavatories poses a risk to a small number of passengers compared to putting all of the passengers on the airplane at risk by keeping the chemical oxygen generators installed.

Five citizens opposed the SFAR, asserting that the safety benefit gained by removing the chemical oxygen system from lavatories to preclude the unlikely event of a terrorist attack does not outweigh the potential risk of individual passengers experiencing hypoxia in the event of a decompression. These commenters also suggested that the FAA consider other options, such as installing an alternative oxygen system in the lavatories, rather than simply removing the chemical oxygen system.

We disagree with the commenters' assertion that the potential risk of a security breach is outweighed by the potential individual risk of hypoxia for a passenger in the lavatory during cabin decompression. We continue to believe that the approach taken by the FAA—to temporarily allow a non-compliance with existing regulations until a solution is found to the problem identified in the underlying AD—appropriately addresses risk. While there is some risk of hypoxia, the emergency descent procedures initiated by the flightcrew are the primary protection against hypoxia provided to passengers.

Pressure loss events have not resulted in a cabin pressure altitude that was instantaneously equal to the airplane altitude. Even when decompressions have occurred when the airplane is at a high altitude, such as 40,000 feet, cabin occupants have not been exposed to those altitudes because it takes time for the cabin pressure to leak from the fuselage. Flightcrews initiate an emergency descent shortly after they receive notification that the cabin pressure cannot be maintained. The airplane is already descending by the time the internal cabin pressure is equal to the airplane altitude.

We carefully considered all of the variables and determined that the risk to all of the passengers due to the security vulnerability was significantly greater than the potential individual risk of hypoxia in the event of cabin decompression. AD 2011–04–09 and SFAR 111 are only interim measures, and we are actively pursuing regulatory changes intended to restore supplemental oxygen in the affected lavatories, while considering the security issues.

We partially agree with the commenters' suggestions to consider other rulemaking alternatives because other alternatives could be used to restore oxygen in the affected lavatories. We disagree with the commenters' suggestions to accomplish longer-term rulemaking actions while leaving the chemical oxygen generators installed in the lavatories. The security vulnerability would remain until final corrective actions were identified and completed. Accomplishing the actions in AD 2011–04–09 eliminates the security vulnerability until additional actions can be identified and taken to restore the oxygen system with a design that would consider the security risk.

Boeing stated that in and of itself, the SFAR does not require removing or expending the contents of the chemical oxygen generators. This will likely cause confusion and is not consistent with the actions in AD 2011–04–09. Boeing recommended that the SFAR be revised to require the oxygen generators to be either removed or expended and that the wording be the same as that in the AD; we disagree. The affected chemical oxygen generators have already been removed or expended in accordance with AD 2011–04–09, and the SFAR does not supersede AD 2011–04–09. The SFAR provides interim relief

to operators from type design requirements that the operators would have been out of compliance with once the actions mandated in AD 2011–04–09 were completed. No changes to SFAR 111 were made as a result of this comment.

Boeing also suggested that the SFAR be clarified to allow the applicant for a type certificate to receive a production certificate and an airworthiness approval for domestic operators affected by AD 2011–04–09 (14 CFR part 121 operators) or for foreign operators (14 CFR part 129) in countries where the local civil aviation authority has issued a mandatory action equivalent to AD 2011–04–09. We infer that Boeing is requesting we clarify SFAR 111 for airplanes registered outside the United States because only foreign registered airplanes could be subject to a mandatory action similar to AD 2011–04–09. We disagree because SFAR 111 does not apply to airplanes registered outside the United States. We cannot provide relief from airworthiness standards issued by civil aviation authorities in other countries. The responsible civil aviation authority must grant relief from an airworthiness standard. Furthermore, SFAR 111, paragraph (b)(2) already provides this relief for airplanes registered in the United States but operated by foreign carriers. No changes were made to the SFAR as a result of this comment.

Boeing suggested paragraph (c) of the SFAR be revised to indicate that it is the operators' responsibility to provide flightcrew training procedures for airplanes with a disabled lavatory oxygen system. We disagree that this clarification is necessary because the SFAR does not include a requirement to revise existing flightcrew training procedures. Operators currently have the option to add or revise existing training for the cabin or flightcrew as they deem necessary. No changes were made to the SFAR as a result of this comment.

Aerox Aviation provided information pertaining to the availability of a small portable, gaseous oxygen supply and stated that such equipment could provide an emergency oxygen supply. We are familiar with the Aerox portable oxygen equipment as well as other portable oxygen equipment from other suppliers. It is possible for operators to incorporate installation of portable gaseous oxygen equipment for use in the lavatory under existing regulations. If such equipment were to be installed, it would need to be approved by the FAA in accordance with existing procedures applicable to type design changes. Neither AD 2011–04–09 nor SFAR 111 would prevent installation of portable gaseous oxygen equipment for use in the lavatory. No changes were made to the SFAR as a result of this comment.

Conclusion

After analyzing the comments submitted in response to SFAR 111, the FAA has determined that no further revisions to the SFAR are necessary at this time. The FAA determined this interim rule remains necessary because it addresses an emergency safety situation that made it imperative to immediately implement the rulemaking's provisions. While the chemical oxygen supply is intended to provide passengers with supplemental oxygen when necessary, lavatories become privately enclosed areas when in use. Possible tampering with that chemical oxygen supply presented a security vulnerability that this rulemaking addresses. Therefore, Amendments 21–94, 25–133, 121–354, and 129–50 remain in effect.

The FAA is currently assessing the recommendations of the ARC discussed above. We are using these recommendations to develop additional rulemaking actions that will restore the affected oxygen systems to their full operational capability in existing and new certifications of affected aircraft, while eliminating the potential security threat posed by the previous systems.

Issued in Washington, DC, on February 15, 2012.

Frank P. Paskiewicz,

Deputy Director, Aircraft Certification Service.

[FR Doc. 2012–4571 Filed 2–24–12; 8:45 am]

BILLING CODE 4910–13–P

DEPARTMENT OF HOMELAND SECURITY

Coast Guard

33 CFR Part 165

[Docket No. USCG–2012–0068]

RIN 1625–AA00

Safety Zone; Lauderdale Air Show, Atlantic Ocean, Fort Lauderdale, FL

AGENCY: Coast Guard, DHS.

ACTION: Temporary final rule.

SUMMARY: The Coast Guard is establishing a temporary safety zone on the waters of the Atlantic Ocean in the vicinity of Fort Lauderdale, Florida during the Lauderdale Air Show. The event is scheduled to take place on Saturday, April 28, 2012 and Sunday, April 29, 2012. The safety zone is necessary for the safety of air show participants, participant aircraft, spectators, and the general public during the event. Persons and vessels are prohibited from entering, transiting through, anchoring in, or remaining within the safety zone unless authorized by the Captain of the Port Miami or a designated representative.

DATES: This rule is effective from 11 a.m. on April 28, 2012 through 4:15 p.m. on April 29, 2012. This rule will be enforced daily from 11 a.m. until 4:15 p.m. on April 28, 2012 and April 29, 2012.

ADDRESSES: Documents indicated in this preamble as being available in the docket are part of docket USCG–2012–0068 and are available online by going to *http://www.regulations.gov,* inserting USCG–2012–0068 in the ''Keyword'' box, and then clicking ''Search.'' They are also available for inspection or copying at the Docket Management Facility (M–30), U.S. Department of Transportation, West Building Ground Floor, Room W12–140, 1200 New Jersey Avenue SE., Washington, DC 20590, between 9 a.m. and 5 p.m., Monday through Friday, except Federal holidays.

FOR FURTHER INFORMATION CONTACT: If you have questions on this temporary final rule, call or email Lieutenant Jennifer S. Makowski, Sector Miami Prevention Department, Coast Guard; telephone (305) 535–8724, email *Jennifer.S.Makowski@uscg.mil.* If you have questions on viewing the docket, call Renee V. Wright, Program Manager, Docket Operations, telephone (202) 366–9826.

SUPPLEMENTARY INFORMATION:

Regulatory Information

The Coast Guard is issuing this temporary final rule without prior notice and opportunity to comment pursuant to authority under section 4(a) of the Administrative Procedure Act (APA) (5 U.S.C. 553(b)). This provision authorizes an agency to issue a rule without prior notice and opportunity to comment when the agency for good cause finds that those procedures are ''impracticable, unnecessary, or contrary to the public interest.'' Under 5 U.S.C. 553(b)(B), the Coast Guard finds that good cause exists for not publishing a notice of proposed rulemaking (NPRM) with respect to this rule because the Coast Guard did not receive necessary information regarding the event until January 17, 2012. As a result, the Coast Guard did not have sufficient time to publish an NPRM and to receive public comments prior to the event. Any delay in the effective date of this rule would be contrary to the public interest

because immediate action is needed to minimize potential danger to air show participants, participant aircraft, spectators, and the general public.

Basis and Purpose

The legal basis for the rule is the Coast Guard's authority to establish regulated navigation areas and other limited access areas: 33 U.S.C. 1231; 46 U.S.C. Chapter 701, 3306, 3703; 50 U.S.C. 191, 195; 33 CFR 1.05–1, 6.04–1, 6.04–6, 160.5; Public Law 107–295, 116 Stat. 2064; Department of Homeland Security Delegation No. 0170.1.

The purpose of the rule is to protect air show participants, participant aircraft, spectators, and the general public from hazards associated with aircraft take-offs and landings, as well as hazards associated with aircraft performing aerobatic maneuvers over navigable waters of the United States.

Discussion of Rule

On April 28, 2012 and April 29, 2012, the National Air, Sea, and Space Foundation is hosting the Lauderdale Air Show in Fort Lauderdale, Florida. The Lauderdale Air Show will include numerous aircraft engaging in aerobatic maneuvers over the Atlantic Ocean. It is expected that approximately 120 spectator vessels will be present in the area during the event. The high speed at which participant aircraft will be traveling and the maneuvers they will be performing pose a safety hazard to air show participants, participant aircraft, spectators, and the general public.

The safety zone encompasses certain navigable waters of the Atlantic Ocean in the vicinity of Fort Lauderdale, Florida. The safety zone will be enforced daily from 11 a.m. until 4:15 p.m. on April 28, 2012 and April 29, 2012. Persons and vessels are prohibited from entering, transiting through, anchoring in, or remaining within the safety zone unless authorized by the Captain of the Port Miami or a designated representative. Persons and vessels desiring to enter, transit through, anchor in, or remain within the safety zone may contact the Captain of the Port Miami by telephone at (305) 535–4472, or a designated representative via VHF radio on channel 16, to request authorization. If authorization to enter, transit through, anchor in, or remain within the safety zone is granted by the Captain of the Port Miami or a designated representative, all persons and vessels receiving such authorization must comply with the instructions of the Captain of the Port Miami or a designated representative. The Coast Guard will provide notice of the safety zone by Local Notice to Mariners, Broadcast Notice to Mariners, and on-scene designated representatives.

Regulatory Analyses

We developed this rule after considering numerous statutes and executive orders related to rulemaking. Below we summarize our analyses based on 13 of these statutes or executive orders.

Regulatory Planning and Review

Executive Orders 13563, Improving Regulation and Regulatory Review, and 12866, Regulatory Planning and Review, direct agencies to assess the costs and benefits of available regulatory alternatives and, if regulation is necessary, to select regulatory approaches that maximize net benefits (including potential economic, environmental, public health and safety effects, distributive impacts, and equity). Executive Order 13563 emphasizes the importance of quantifying both costs and benefits, of reducing costs, of harmonizing rules, and of promoting flexibility. This rule has not been designated a significant regulatory action under section 3(f) of Executive Order 12866. Accordingly, the Office of Management and Budget has not reviewed this regulation under Executive Order 12866.

The economic impact of this rule is not significant for the following reasons: (1) The safety zone will be enforced for only 10½ hours; (2) although persons and vessels will not be able to enter, transit through, anchor in, or remain within the safety zone without authorization from the Captain of the Port Miami or a designated representative, they may operate in the surrounding area during the enforcement periods; (3) persons and vessels may still enter, transit through, anchor in, or remain within the safety zone if authorized by the Captain of the Port Miami or a designated representative; and (4) the Coast Guard will provide advance notification of the safety zone to the local maritime community by Local Notice to Mariners and Broadcast Notice to Mariners.

Small Entities

Under the Regulatory Flexibility Act (5 U.S.C. 601–612), we have considered whether this rule would have a significant economic impact on a substantial number of small entities. The term ''small entities'' comprises small businesses, not-for-profit organizations that are independently owned and operated and are not dominant in their fields, and governmental jurisdictions with populations of less than 50,000.

The Coast Guard certifies under 5 U.S.C. 605(b) that this rule will not have a significant economic impact on a substantial number of small entities. This rule may affect the following entities, some of which may be small entities: the owners or operators of vessels intending to enter, transit through, anchor in, or remain within that portion of the Atlantic Ocean encompassed within the safety zone from 11 a.m. on April 28, 2012 through 4:15 p.m. on April 29, 2012. For the reasons discussed in the Regulatory Planning and Review section above, this rule will not have a significant economic impact on a substantial number of small entities.

Assistance for Small Entities

Under section 213(a) of the Small Business Regulatory Enforcement Fairness Act of 1996 (Pub. L. 104–121), we offer to assist small entities in understanding the rule so that they can better evaluate its effects on them and participate in the rulemaking process.

Small businesses may send comments on the actions of Federal employees who enforce, or otherwise determine compliance with, Federal regulations to the Small Business and Agriculture Regulatory Enforcement Ombudsman and the Regional Small Business Regulatory Fairness Boards. The Ombudsman evaluates these actions annually and rates each agency's responsiveness to small business. If you wish to comment on actions by employees of the Coast Guard, call 1–888–REG–FAIR (1–888–734–3247). The Coast Guard will not retaliate against small entities that question or complain about this rule or any policy or action of the Coast Guard.

Collection of Information

This rule calls for no new collection of information under the Paperwork Reduction Act of 1995 (44 U.S.C. 3501–3520).

Federalism

A rule has implications for federalism under Executive Order 13132, Federalism, if it has a substantial direct effect on State or local governments and would either preempt State law or impose a substantial direct cost of compliance on them. We have analyzed this rule under that Order and have determined that it does not have implications for federalism.

Unfunded Mandates Reform Act

The Unfunded Mandates Reform Act of 1995 (2 U.S.C. 1531–1538) requires Federal agencies to assess the effects of their discretionary regulatory actions. In

particular, the Act addresses actions that may result in the expenditure by a State, local, or Tribal government, in the aggregate, or by the private sector of $100,000,000 or more in any one year. Though this rule will not result in such an expenditure, we do discuss the effects of this rule elsewhere in this preamble.

Taking of Private Property

This rule will not effect a taking of private property or otherwise have taking implications under Executive Order 12630, Governmental Actions and Interference with Constitutionally Protected Property Rights.

Civil Justice Reform

This rule meets applicable standards in sections 3(a) and 3(b)(2) of Executive Order 12988, Civil Justice Reform, to minimize litigation, eliminate ambiguity, and reduce burden.

Protection of Children

We have analyzed this rule under Executive Order 13045, Protection of Children from Environmental Health Risks and Safety Risks. This rule is not an economically significant rule and does not create an environmental risk to health or risk to safety that may disproportionately affect children.

Indian Tribal Governments

This rule does not have Tribal implications under Executive Order 13175, Consultation and Coordination with Indian Tribal Governments, because it does not have a substantial direct effect on one or more Indian Tribes, on the relationship between the Federal Government and Indian Tribes, or on the distribution of power and responsibilities between the Federal Government and Indian Tribes.

Energy Effects

We have analyzed this rule under Executive Order 13211, Actions Concerning Regulations That Significantly Affect Energy Supply, Distribution, or Use. We have determined that it is not a ''significant energy action'' under that order because it is not a ''significant regulatory action'' under Executive Order 12866 and is not likely to have a significant adverse effect on the supply, distribution, or use of energy. The Administrator of the Office of Information and Regulatory Affairs has not designated it as a significant energy action. Therefore, it does not require a Statement of Energy Effects under Executive Order 13211.

Technical Standards

The National Technology Transfer and Advancement Act (NTTAA) (15 U.S.C. 272 note) directs agencies to use voluntary consensus standards in their regulatory activities unless the agency provides Congress, through the Office of Management and Budget, with an explanation of why using these standards would be inconsistent with applicable law or otherwise impractical. Voluntary consensus standards are technical standards (e.g., specifications of materials, performance, design, or operation; test methods; sampling procedures; and related management systems practices) that are developed or adopted by voluntary consensus standards bodies.

This rule does not use technical standards. Therefore, we did not consider the use of voluntary consensus standards.

Environment

We have analyzed this rule under Department of Homeland Security Management Directive 023–01 and Commandant Instruction M16475.lD, which guide the Coast Guard in complying with the National Environmental Policy Act of 1969 (NEPA) (42 U.S.C. 4321–4370f), and have concluded this action is one of a category of actions that do not individually or cumulatively have a significant effect on the human environment. This rule is categorically excluded, under figure 2–1, paragraph (34)(g), of the Instruction. This rule involves establishing a temporary safety zone that will be enforced for a total of 10½ hours. An environmental analysis checklist and a categorical exclusion determination are available in the docket where indicated under **ADDRESSES**.

List of Subjects in 33 CFR Part 165

Harbors, Marine safety, Navigation (water), Reporting and recordkeeping requirements, Security measures, Waterways.

For the reasons discussed in the preamble, the Coast Guard amends 33 CFR part 165 as follows:

PART 165—REGULATED NAVIGATION AREAS AND LIMITED ACCESS AREAS

■ 1. The authority citation for part 165 continues to read as follows:

Authority: 33 U.S.C. 1231; 46 U.S.C. Chapter 701, 3306, 3703; 50 U.S.C. 191, 195; 33 CFR 1.05–1, 6.04–1, 6.04–6, 160.5; Pub. L. 107–295, 116 Stat. 2064; Department of Homeland Security Delegation No. 0170.1.

■ 2. Add a temporary § 165.T07–0068 to read as follows:

§ 165.T07–0068 Safety Zone; Lauderdale Air Show, Atlantic Ocean, Fort Lauderdale, FL.

(a) *Regulated area.* The following regulated area is a safety zone. All waters of the Atlantic Ocean in the vicinity of Fort Lauderdale, Florida that are encompassed within an imaginary line connecting the following points: starting at Point 1 in position 26°09′26″ N, 80°05′54″ W; thence east to Point 2 in position 26°09′21″ N, 80°05′14″ W; thence south to Point 3 in position 26°07′24″ N, 80°05′30″ W; thence west to Point 4 in position 26°07′28″ N, 80°06′09'' W; thence north back to origin. All coordinates are North American Datum 1983.

(b) *Definition.* The term ''designated representative'' means Coast Guard Patrol Commanders, including Coast Guard coxswains, petty officers, and other officers operating Coast Guard vessels, and Federal, state, and local officers designated by or assisting the Captain of the Port Miami in the enforcement of the regulated area.

(c) *Regulations.* (1) All persons and vessels are prohibited from entering, transiting through, anchoring in, or remaining within the regulated area unless authorized by the Captain of the Port Miami or a designated representative.

(2) Persons and vessels desiring to enter, transit through, anchor in, or remain within the regulated area may contact the Captain of the Port Miami by telephone at (305) 535–4472, or a designated representative via VHF radio on channel 16, to request authorization. If authorization to enter, transit through, anchor in, or remain within the regulated area is granted by the Captain of the Port Miami or a designated representative, all persons and vessels receiving such authorization must comply with the instructions of the Captain of the Port Miami or a designated representative.

(3) The Coast Guard will provide notice of the regulated area by Local Notice to Mariners, Broadcast Notice to Mariners, and on-scene designated representatives.

(d) *Effective date and enforcement periods.* This rule is effective from 11 a.m. on April 28, 2012 through 4:15 p.m. on April 29, 2012. This rule will be enforced daily from 11 a.m. until 4:15 p.m. on April 28, 2012 and April 29, 2012.

Dated: February 8, 2012.

G.J. Depinet,

Captain, U.S. Coast Guard, Captain of the Port Miami.

[FR Doc. 2012–4452 Filed 2–24–12; 8:45 am]

BILLING CODE 9110–04–P

ENVIRONMENTAL PROTECTION AGENCY

40 CFR Part 63

[EPA–R09–OAR–2012–0117; FRL–9635–7]

Delegation of National Emission Standards for Hazardous Air Pollutants for Source Categories; Nevada

AGENCY: Environmental Protection Agency (EPA).

ACTION: Direct final rule.

SUMMARY: EPA is amending certain regulations to reflect the current delegation status of national emission standards for hazardous air pollutants (NESHAP) in Nevada. Several NESHAP were delegated to the Nevada Division of Environmental Protection on October 6, 2011. The purpose of this action is to update the listing in the Code of Federal Regulations.

DATES: This rule is effective on April 27, 2012 without further notice, unless EPA receives adverse comments by March 28, 2012. If we receive such comments, we will publish a timely withdrawal in the **Federal Register** to notify the public that this direct final rule will not take effect.

ADDRESSES: Submit comments, identified by docket number EPA–R09–OAR–2012–0117, by one of the following methods:

1. *Federal eRulemaking Portal: www.regulations.gov.* Follow the on-line instructions.
2. *Email: steckel.andrew@epa.gov.*
3. *Mail or delivery:* Andrew Steckel (AIR–4), U.S. Environmental Protection Agency Region IX, 75 Hawthorne Street, San Francisco, CA 94105–3901.

Instructions: All comments will be included in the public docket without change and may be made available online at *www.regulations.gov,* including any personal information provided, unless the comment includes Confidential Business Information (CBI) or other information whose disclosure is restricted by statute. Information that you consider CBI or otherwise protected should be clearly identified as such and should not be submitted through *www.regulations.gov* or email. *www.regulations.gov* is an ''anonymous access'' system, and EPA will not know your identity or contact information unless you provide it in the body of your comment. If you send email directly to EPA, your email address will be automatically captured and included as part of the public comment. If EPA cannot read your comment due to technical difficulties and cannot contact you for clarification, EPA may not be able to consider your comment. Electronic files should avoid the use of special characters, any form of encryption, and be free of any defects or viruses.

Docket: The index to the docket for this action is available electronically at *www.regulations.gov* and in hard copy at EPA Region IX, 75 Hawthorne Street, San Francisco, California. While all documents in the docket are listed in the index, some information may be publicly available only at the hard copy location (e.g., copyrighted material), and some may not be publicly available in either location (e.g., CBI). To inspect the hard copy materials, please schedule an appointment during normal business hours with the contact listed in the **FOR FURTHER INFORMATION CONTACT** section.

FOR FURTHER INFORMATION CONTACT: Rynda Kay, EPA Region IX, (415) 947–4118, *kay.rynda@epa.gov.*

SUPPLEMENTARY INFORMATION: Throughout this document, ''we,'' ''us'' and ''our'' refer to EPA.

Table of Contents

I. Background
A. Delegation of NESHAP
B. NDEP Delegations
II. EPA Action
III. Statutory and Executive Order Reviews

I. Background

A. Delegation of NESHAP

Section 112(l) of the Clean Air Act, as amended in 1990 (CAA), authorizes EPA to delegate to State or local air pollution control agencies the authority to implement and enforce the standards set out in the Code of Federal Regulations, Title 40 (40 CFR), part 63, National Emission Standards for Hazardous Air Pollutants for Source Categories. On November 26, 1993, EPA promulgated regulations, codified at 40 CFR part 63, Subpart E (hereinafter referred to as ''Subpart E''), establishing procedures for EPA's approval of State rules or programs under section 112(l) (see 58 FR 62262). Subpart E was later amended on September 14, 2000 (see 65 FR 55810).

Any request for approval under CAA section 112(l) must meet the approval criteria in 112(l)(5) and Subpart E. To streamline the approval process for future applications, a State or local agency may submit a one-time demonstration that it has adequate authorities and resources to implement and enforce any CAA section 112 standards. If such demonstration is approved, then the State or local agency would no longer need to resubmit a demonstration of these same authorities and resources for every subsequent request for delegation of CAA section 112 standards. However, EPA maintains the authority to withdraw its approval if the State does not adequately implement or enforce an approved rule or program.

B. NDEP Delegations

On May 27, 1998, EPA published a direct final action delegating to the NDEP several NESHAP and approving NDEP's delegation mechanism for future standards (see 63 FR 28906). That action explained the procedure for EPA to grant future delegations to NDEP by letter, with periodic **Federal Register** listings of standards that have been delegated. On August 19, 2011, NDEP requested delegation of the following NESHAP contained in 40 CFR part 63:

- The amendments to Subpart LLL—NESHAP from the Portland Cement Manufacturing Industry, as set forth in 75 FR 54970 (September 9, 2010).
- The amendments to Subpart ZZZZ—NESHAP for Stationary Reciprocating Internal Combustion Engines, as set forth in 75 FR 51570 (August 20, 2010) and 76 FR 12863 (March 9, 2011).
- Subpart DDDDD—NESHAP for Industrial, Commercial, and Institutional Boilers and Process Heaters.
- Subpart BBBBBB—NESHAP for Source Category: Gasoline Distribution Bulk Terminals, Bulk Plants, and Pipeline Facilities.
- Subpart CCCCCC—NESHAP for Source Category: Gasoline Dispensing Facilities.
- Subpart HHHHHH—NESHAP: Paint Stripping and Miscellaneous Surface Coating Operations at Area Sources.
- Subpart JJJJJJ—NESHAP for Industrial, Commercial, and Institutional Boilers Area Sources.
- Subpart VVVVVV—NESHAP for Chemical Manufacturing Area Sources.
- Subpart WWWWWW—NESHAP: Area Source Standards for Plating and Polishing Operations.
- Subpart XXXXXX—NESHAP Area Source Standards for Nine Metal Fabrication and Finishing Source Categories.
- Subpart ZZZZZZ—NESHAP: Area Source Standards for Aluminum, Copper, and Other Nonferrous Foundries.

• Subpart AAAAAAA—NESHAP for Area Sources: Asphalt Processing and Asphalt Roofing Manufacturing.

• Subpart BBBBBBB—NESHAP for Area Sources: Chemical Preparations Industry.

• Subpart CCCCCCC—NESHAP for Area Sources: Paints and Allied Products Manufacturing.

• Subpart EEEEEEE—NESHAP: Gold Mine Ore Processing and Production Area Source Category.

On October 6, 2011, EPA granted delegation to NDEP for these NESHAP, along with any amendments made to previously-delegated NESHAP as of July 1, 2010. Today's action is serving to notify the public of the October 6, 2011, delegation and to codify these delegations into the Code of Federal Regulations.

II. EPA Action

Today's document serves to notify the public of the delegation of NESHAP to NDEP on October 6, 2011. Today's action will codify these delegations into the CFR.

III. Statutory and Executive Order Reviews

Under the CAA, the Administrator is required to approve delegation requests that comply with the provisions of the CAA and applicable Federal regulations. 42 U.S.C. 7412(l); 40 CFR 63.91(b). Thus, in reviewing delegation submissions, EPA's role is to approve State choices, provided that they meet the criteria of the CAA. Accordingly, this action merely approves State law as meeting Federal requirements and does not impose additional requirements beyond those imposed by State law. For that reason, this action:

• Is not a ''significant regulatory action'' subject to review by the Office of Management and Budget under Executive Order 12866 (58 FR 51735, October 4, 1993);

• Does not impose an information collection burden under the provisions of the Paperwork Reduction Act (44 U.S.C. 3501 et seq.);

• Is certified as not having a significant economic impact on a substantial number of small entities under the Regulatory Flexibility Act (5 U.S.C. 601 et seq.);

• Does not contain any unfunded mandate or significantly or uniquely affect small governments, as described in the Unfunded Mandates Reform Act of 1995 (Pub. L. 104–4);

• Does not have Federalism implications as specified in Executive Order 13132 (64 FR 43255, August 10, 1999);

• Is not an economically significant regulatory action based on health or safety risks subject to Executive Order 13045 (62 FR 19885, April 23, 1997);

• Is not a significant regulatory action subject to Executive Order 13211 (66 FR 28355, May 22, 2001);

• Is not subject to requirements of Section 12(d) of the National Technology Transfer and Advancement Act of 1995 (15 U.S.C. 272 note) because application of those requirements would be inconsistent with the CAA; and

• Does not provide EPA with the discretionary authority to address disproportionate human health or environmental effects with practical, appropriate, and legally permissible methods under Executive Order 12898 (59 FR 7629, February 16, 1994).

In addition, this rule does not have tribal implications as specified by Executive Order 13175 (65 FR 67249, November 9, 2000), because the delegations are not approved to apply in Indian country located in the State, and EPA notes that it will not impose substantial direct costs on tribal governments or preempt tribal law.

The Congressional Review Act, 5 U.S.C. 801 et seq., as added by the Small Business Regulatory Enforcement Fairness Act of 1996, generally provides that before a rule may take effect, the agency promulgating the rule must submit a rule report, which includes a copy of the rule, to each House of the Congress and to the Comptroller General of the United States. EPA will submit a report containing this action and other required information to the U.S. Senate, the U.S. House of Representatives, and the Comptroller General of the United States prior to publication of the rule in the **Federal Register**. A major rule cannot take effect until 60 days after it is published in the **Federal Register**. This action is not a ''major rule'' as defined by 5 U.S.C. 804(2).

Under section 307(b)(1) of the CAA, petitions for judicial review of this action must be filed in the United States Court of Appeals for the appropriate circuit by April 27, 2012. Filing a petition for reconsideration by the Administrator of this final rule does not affect the finality of this action for the purposes of judicial review nor does it extend the time within which a petition for judicial review may be filed, and shall not postpone the effectiveness of such rule or action. Parties with objections to this direct final rule are encouraged to file a comment in response to the parallel notice of proposed rulemaking for this action published in the Proposed Rules section of today's **Federal Register**, rather than file an immediate petition for judicial review of this direct final rule, so that EPA can withdraw this direct final rule and address the comment in the proposed rulemaking. This action may not be challenged later in proceedings to enforce its requirements (see section 307(b)(2)).

Authority: This action is issued under the authority of Section 112 of the Clean Air Act, as amended, 42 U.S.C. Section 7412.

List of Subjects in 40 CFR Part 63

Environmental protection, Administrative practice and procedure, Air pollution control, Hazardous substances, Intergovernmental relations, Reporting and recordkeeping requirements.

Dated: February 13, 2012.

Deborah Jordan,

Director, Air Division, Region IX.

Title 40, chapter I, part 63 of the Code of Federal Regulations is amended as follows:

PART 63—[AMENDED]

■ 1. The authority citation for Part 63 continues to read as follows:

Authority: 42 U.S.C. 7401, et seq.

Subpart E—Approval of State Programs and Delegation of Federal Authorities

■ 2. Section 63.99 is amended by revising the table in paragraph (a)(29)(i) to read as follows:

§ 63.99 Delegated Federal authorities.

(a) * * *

(29) * * *

(i) * * *

DELEGATION STATUS FOR PART 63 STANDARDS—NEVADA

Subpart	Description	NDEP [1]	Washoe [2]	Clark [3]
A	General Provisions	X	X	X
F	Synthetic Organic Chemical Manufacturing Industry	X		X

DELEGATION STATUS FOR PART 63 STANDARDS—NEVADA—Continued

Subpart	Description	NDEP [1]	Washoe [2]	Clark [3]
G	Synthetic Organic Chemical Manufacturing Industry: Process Vents, Storage Vessels, Transfer Operations, and Wastewater.	X		X
H	Organic Hazardous Air Pollutants: Equipment Leaks	X		X
I	Organic Hazardous Air Pollutants: Certain Processes Subject to the Negotiated Regulation for Equipment Leaks.	X		X
J	Polyvinyl Chloride and Copolymers Production	X		X
L	Coke Oven Batteries	X		X
M	Perchloroethylene Dry Cleaning	X	X	X
N	Hard and Decorative Chromium Electroplating and Chromium Anodizing Tanks.	X	X	X
O	Ethylene Oxide Sterilization Facilities	X	X	X
Q	Industrial Process Cooling Towers	X		X
R	Gasoline Distribution Facilities	X	X	X
S	Pulp and Paper	X		X
T	Halogenated Solvent Cleaning	X	X	X
U	Group I Polymers and Resins	X		X
W	Epoxy Resins Production and Non-Nylon Polyamides Production	X		X
X	Secondary Lead Smelting	X		X
Y	Marine Tank Vessel Loading Operations	X		
AA	Phosphoric Acid Manufacturing Plants	X		X
BB	Phosphate Fertilizers Production Plants	X		X
CC	Petroleum Refineries	X		X
DD	Off-Site Waste and Recovery Operations	X		X
EE	Magnetic Tape Manufacturing Operations	X		X
GG	Aerospace Manufacturing and Rework Facilities	X		X
HH	Oil and Natural Gas Production Facilities	X		X
II	Shipbuilding and Ship Repair (Surface Coating)	X		X
JJ	Wood Furniture Manufacturing Operations	X		X
KK	Printing and Publishing Industry	X	X	X
LL	Primary Aluminum Reduction Plants	X		X
MM	Chemical Recovery Combustion Sources at Kraft, Soda, Sulfite, and Stand-Alone Semichemical Pulp Mills.	X		X
OO	Tanks—Level 1	X		X
PP	Containers	X		X
QQ	Surface Impoundments	X		X
RR	Individual Drain Systems	X		X
SS	Closed Vent Systems, Control Devices, Recovery Devices and Routing to a Fuel Gas System or a Process.	X		X
TT	Equipment Leaks—Control Level 1	X		X
UU	Equipment Leaks—Control Level 2	X		X
VV	Oil-Water Separators and Organic-Water Separators	X		X
WW	Storage Vessels (Tanks)—Control Level 2	X		X
XX	Ethylene Manufacturing Process Units: Heat Exchange Systems and Waste Operations.	X		X
YY	Generic MACT Standards	X		X
CCC	Steel Pickling	X		X
DDD	Mineral Wool Production	X		X
EEE	Hazardous Waste Combustors	X		X
GGG	Pharmaceuticals Production	X		X
HHH	Natural Gas Transmission and Storage Facilities	X		X
III	Flexible Polyurethane Foam Production	X		X
JJJ	Group IV Polymers and Resins	X		X
LLL	Portland Cement Manufacturing Industry	X		X
MMM	Pesticide Active Ingredient Production	X		X
NNN	Wool Fiberglass Manufacturing	X		X
OOO	Manufacture of Amino/Phenolic Resins	X		X
PPP	Polyether Polyols Production	X		X
QQQ	Primary Copper Smelting	X		X
RRR	Secondary Aluminum Production	X		X
TTT	Primary Lead Smelting	X		X
UUU	Petroleum Refineries: Catalytic Cracking, Catalytic Reforming, and Sulfur Recovery Units.	X		X
VVV	Publicly Owned Treatment Works	X	X	X
XXX	Ferroalloys Production	X		X
AAAA	Municipal Solid Waste Landfills	X		X
CCCC	Manufacturing of Nutritional Yeast	X		X
DDDD	Plywood and Composite Wood Products	X		X
EEEE	Organic Liquids Distribution (non-gasoline)	X	X	X
FFFF	Miscellaneous Organic Chemical Manufacturing	X		X
GGGG	Solvent Extraction for Vegetable Oil Production	X		X
HHHH	Wet-Formed Fiberglass Mat Production	X		X
IIII	Surface Coating of Automobiles and Light-Duty Trucks	X		X

DELEGATION STATUS FOR PART 63 STANDARDS—NEVADA—Continued

Subpart	Description	NDEP [1]	Washoe [2]	Clark [3]
JJJJ	Paper and Other Web Coating	X		X
KKKK	Surface Coating of Metal Cans	X		X
MMMM	Miscellaneous Metal Parts and Products	X		X
NNNN	Large Appliances	X		X
OOOO	Printing, Coating, and Dyeing of Fabrics and Other Textiles	X		X
PPPP	Surface Coating of Plastic Parts and Products	X		X
QQQQ	Wood Building Products	X		X
RRRR	Surface Coating of Metal Furniture	X		X
SSSS	Surface Coating of Metal Coil	X		X
TTTT	Leather Finishing Operations	X		X
UUUU	Cellulose Products Manufacturing	X		X
VVVV	Boat Manufacturing	X		X
WWWW	Reinforced Plastics Composites Production	X	X	X
XXXX	Tire Manufacturing	X		X
YYYY	Stationary Combustion Turbines	X		X
ZZZZ	Stationary Reciprocating Internal Combustion Engines	X	X	X
AAAAA	Lime Manufacturing Plants	X		X
BBBBB	Semiconductor Manufacturing	X		X
CCCCC	Coke Oven: Pushing, Quenching and Battery Stacks	X		X
DDDDD	Industrial, Commercial, and Institutional Boiler and Process Heaters	X		X
EEEEE	Iron and Steel Foundries	X		X
FFFFF	Integrated Iron and Steel	X		X
GGGGG	Site Remediation	X		X
HHHHH	Miscellaneous Coating Manufacturing	X		X
IIIII	Mercury Emissions from Mercury Cell Chlor-Alkali Plants			X
JJJJJ	Brick and Structural Clay Products Manufacturing	X		X
KKKKK	Clay Ceramics Manufacturing	X		X
LLLLL	Asphalt Roofing and Processing	X		X
MMMMM	Flexible Polyurethane Foam Fabrication Operation	X		X
NNNNN	Hydrochloric Acid Production	X		X
PPPPP	Engine Test Cells/Stands	X		X
QQQQQ	Friction Products Manufacturing	X		X
RRRRR	Taconite Iron Ore Processing			X
SSSSS	Refractory Products Manufacturing	X		X
TTTTT	Primary Magnesium Refining			X
WWWWW	Hospital Ethylene Oxide Sterilizers	X	X	X
YYYYY	Electric Arc Furnace Steelmaking Facilities (area sources)	X		X
ZZZZZ	Iron and Steel Foundries Area Sources	X		X
BBBBBB	Gasoline Distribution Bulk Terminals, Bulk Plants and Pipeline Facilities	X	X	X
CCCCCC	Gasoline Dispensing Facilities	X	X	X
DDDDDD	Polyvinyl Chloride and Copolymers Production Area Sources	X		X
EEEEEE	Primary Copper Smelting Area Sources	X		X
FFFFFF	Secondary Copper Smelting Area Sources	X		X
GGGGGG	Primary Nonferrous Metals Area Sources—Zinc, Cadmium, and Beryllium	X		X
HHHHHH	Paint Stripping and Miscellaneous Surface Coating Operations at Area Sources.	X	X	X
JJJJJJ	Industrial, Commercial, and Institutional Boilers and Process Heaters—Area Sources.	X		
LLLLLL	Acrylic and Modacrylic Fibers Production Area Sources	X		X
MMMMMM	Carbon Black Production Area Sources	X		X
NNNNNN	Chemical Manufacturing Area Sources: Chromium Compounds	X		X
OOOOOO	Flexible Polyurethane Foam Production and Fabrication Area Sources	X	X	X
PPPPPP	Lead Acid Battery Manufacturing Area Sources	X		X
QQQQQQ	Wood Preserving Area Sources	X		X
RRRRRR	Clay Ceramics Manufacturing Area Sources	X		X
SSSSSS	Glass Manufacturing Area Sources	X		X
TTTTTT	Secondary Nonferrous Metals Processing Area Sources	X		X
VVVVVV	Chemical Manufacturing Industry—Area Sources	X		
WWWWWW	Area Source Standards for Plating and Polishing Operations	X	X	X
XXXXXX	Area Source Standards for Nine Metal Fabrication and Finishing Source Categories.	X	X	X
YYYYYY	Area Sources: Ferroalloys Production Facilities			X
ZZZZZZ	Area Source Standards for Aluminum, Copper, and Other Nonferrous Foundries.	X		X
AAAAAAA	Asphalt Processing and Asphalt Roofing Manufacturing—Area Sources	X		
BBBBBBB	Chemical Preparations Industry—Area Sources	X		
CCCCCCC	Paint and Allied Products Manufacturing—Area Sources	X		
EEEEEEE	Gold Mine Ore Processing and Production—Area Sources	X		

[1] Nevada Division of Environmental Protection.
[2] Washoe County Air Quality Management Division.
[3] Clark County Department of Air Quality Management.

* * * * *

[FR Doc. 2012–4563 Filed 2–24–12; 8:45 am]

BILLING CODE 6560–50–P

ENVIRONMENTAL PROTECTION AGENCY

40 CFR Part 93

[EPA–HQ–OAR–2011–0393; FRL–9636–5]

RIN 2060–AR03

Transportation Conformity Rule: MOVES Regional Grace Period Extension

AGENCY: Environmental Protection Agency (EPA).

ACTION: Final rule.

SUMMARY: EPA is taking final action to extend the grace period before the MOtor Vehicle Emission Simulator (MOVES) model is required for regional emissions analyses for transportation conformity determinations (''regional conformity analyses''). This final rule provides an additional year to the previously established two-year conformity grace period. As a result, EPA is announcing in this **Federal Register** that MOVES must be used for new regional conformity analyses that begin after March 2, 2013. This action does not affect EPA's previous approval of the use of MOVES in state air quality implementation plan (SIP) submissions or the existing grace period before MOVES is required for carbon monoxide and particulate matter hot-spot analyses for project-level conformity determinations (75 FR 79370).

DATES: This rule is effective on February 27, 2012.

ADDRESSES: EPA has established a docket for this action under Docket ID No. EPA–HQ–OAR–2011–0393. All documents in the docket are listed in the *www.regulations.gov* index. Although listed in the index, some information may not be publicly available, e.g., CBI or other information whose disclosure is restricted by statute. Certain other material, such as copyrighted material, will be publicly available only in hard copy. Publicly available docket materials are available either electronically in *www.regulations.gov* or in hard copy at the Air and Radiation Docket, EPA/DC, EPA West, Room 3334, 1301 Constitution Ave. NW., Washington, DC. The Public Reading Room is open from 8:30 a.m. to 4:30 p.m., Monday through Friday, excluding legal holidays. The telephone number for the Public Reading Room is (202) 566–1744 and the telephone number for the Air and Radiation Docket is (202) 566–1742.

FOR FURTHER INFORMATION CONTACT: Meg Patulski, State Measures and Transportation Planning Center, Transportation and Climate Division, Environmental Protection Agency, 2000 Traverwood Drive, Ann Arbor, MI 48105; telephone number: (734) 214–4842; fax number: (734) 214–4052; email address: *patulski.meg@epa.gov;* or Astrid Larsen, State Measures and Transportation Planning Center, Transportation and Climate Division, Environmental Protection Agency, 2000 Traverwood Drive, Ann Arbor, MI 48105; telephone number: (734) 214–4812; fax number: (734) 214–4052; email address: *larsen.astrid@epa.gov.*

SUPPLEMENTARY INFORMATION:

The content of this preamble is listed in the following outline:

I. General Information
II. Background
III. Extension of MOVES Regional Conformity Grace Period
IV. Conformity SIPs
V. Statutory and Executive Order Reviews

Availability of MOVES and Support Materials

Copies of the official version of the MOVES motor vehicle emissions model, along with user guides and supporting documentation, are available on EPA's MOVES Web site: *www.epa.gov/otaq/models/moves/index.htm.*

Guidance on how to apply MOVES for SIPs and transportation conformity purposes can be found on the EPA's transportation conformity Web site at: *www.epa.gov/otaq/stateresources/transconf/policy.htm.*

I. General Information

A. Does this action apply to me?

Entities potentially regulated by the transportation conformity rule are those that adopt, approve, or fund transportation plans, transportation improvement programs (TIPs), or projects under title 23 U.S.C. or title 49 U.S.C. chapter 53. Regulated categories and entities affected by today's action include:

Category	Examples of regulated entities
Local government	Local transportation and air quality agencies, including metropolitan planning organizations (MPOs).
State government	State transportation and air quality agencies.
Federal government	Department of Transportation (Federal Highway Administration (FHWA) and Federal Transit Administration (FTA)).

This table is not intended to be exhaustive, but rather provides a guide for readers regarding entities likely to be affected by this final rule. This table lists the types of entities of which EPA is aware that potentially could be regulated by the transportation conformity rule. Other types of entities not listed in the table could also be regulated. To determine whether your organization is regulated by this action, you should carefully examine the applicability requirements in 40 CFR 93.102. If you have questions regarding the applicability of this final rule to a particular entity, consult the persons listed in the preceding **FOR FURTHER INFORMATION CONTACT** section.

B. How do I get copies of this final rule and other documents?

1. Docket

EPA has established an official public docket for this action under Docket ID No. EPA–HQ–OAR–2011–0393. You can get a paper copy of this **Federal Register** document, as well as the documents specifically referenced in this action, any public comments received, and other information related to this action at the official public docket. See the **ADDRESSES** section for its location.

2. Electronic Access

You may access this **Federal Register** document electronically through EPA's transportation conformity Web site at: *www.epa.gov/otaq/stateresources/transconf/conf-regs.htm.* You may also access this document electronically under the **Federal Register** listings at: *www.epa.gov/fedrgstr/.*

An electronic version of the official public docket is available through *www.regulations.gov.* You may use *www.regulations.gov* to view public comments, access the index listing of the contents of the official public docket, and to access those documents in the public docket that are available

electronically. Once in the system, select ''search,'' then key in the appropriate docket identification number.

Certain types of information will not be placed in the electronic public docket. Information claimed as CBI and other information for which disclosure is restricted by statute is not available for public viewing in the electronic public docket. EPA's policy is that copyrighted material will not be placed in the electronic public docket but will be available only in printed, paper form in the official public docket.

To the extent feasible, publicly available docket materials will be made available in the electronic public docket. When a document is selected from the index list in EPA Dockets, the system will identify whether the document is available for viewing in the electronic public docket. Although not all docket materials may be available electronically, you may still access any of the publicly available docket materials through the docket facility identified in the **ADDRESSES** section. EPA intends to provide electronic access in the future to all of the publicly available docket materials through the electronic public docket.

For additional information about the electronic public docket, visit the EPA Docket Center homepage at: *www.epa.gov/epahome/dockets.htm.*

C. What is the effective date?

The final rule amendments are effective on February 27, 2012. Section 553(d) of the Administrative Procedures Act, 5 U.S.C. Chapter 5, generally provides that rules may not take effect earlier than 30 days after they are published in the **Federal Register**. However, section 5 U.S.C. 553(d)(1) allows an effective date less than 30 days after publication for a rule that ''grants or recognizes an exemption or relieves a restriction.'' Since this rule provides additional time before the requirement to use MOVES applies, it is effectively granting an exemption or relieving the restriction that would require state and local governments to use MOVES2010 and minor revisions for regional conformity analyses earlier than March 2, 2013.

II. Background

A. What is transportation conformity?

Transportation conformity is required under Clean Air Act (CAA) section 176(c) (42 U.S.C. 7506(c)) to ensure that transportation plans, TIPs, and federally supported highway and transit projects are consistent with the purpose of the SIP. Conformity to the purpose of the SIP means that transportation activities will not cause or contribute to new air quality violations, worsen existing violations, or delay timely attainment of the relevant national ambient air quality standard (NAAQS) or required interim milestones.

Transportation conformity (hereafter, ''conformity'') applies to areas that are designated nonattainment, and those areas redesignated to attainment after 1990 (''maintenance areas'') for transportation-related criteria pollutants: ozone, particulate matter ($PM_{2.5}$ and PM_{10}),[1] carbon monoxide (CO), and nitrogen dioxide (NO_2). EPA's conformity rule (40 CFR Parts 51 and 93) establishes the criteria and procedures for determining whether transportation activities conform to the SIP. EPA first promulgated the conformity rule on November 24, 1993 (58 FR 62188) and subsequently published several amendments to the rule. The Department of Transportation (DOT) is EPA's federal partner in implementing the conformity regulation.

B. What is MOVES, and how has it been implemented to date?

MOVES is EPA's state-of-the-art model for estimating emissions from highway vehicles, based on analyses of millions of emission test results and considerable advances in the Agency's understanding of vehicle emissions. MOVES is EPA's latest motor vehicle emissions model for state and local agencies to estimate volatile organic compounds (VOCs), nitrogen oxides (NO_X), PM, CO, and other precursors from cars, trucks, buses, and motorcycles for SIP purposes and conformity determinations outside of California. The database-centered design of MOVES allows EPA to update emissions data more frequently and allows users much greater flexibility in organizing input and output data than EPA's prior emissions model. MOVES improves the quality of results and overall functionality, as compared to the previous emissions model, MOBILE6.2.[2]

EPA announced the release of MOVES2010 in the **Federal Register** on March 2, 2010 (75 FR 9411), and also announced a two-year grace period before MOVES2010 was required for regional conformity analyses. EPA subsequently released MOVES2010a on September 8, 2010, and MOVES2010a is considered a minor revision that enhances model performance and does not significantly affect the criteria pollutant emissions results from MOVES2010. Therefore, MOVES2010a is not considered a ''new model'' under section 93.111 of the conformity rule.[3] As a result, the MOVES2010 grace period for regional conformity analyses has also applied to the use of MOVES2010a.[4] EPA notes that references to ''MOVES'' in this notice relate to the approved versions of MOVES2010 and subsequent minor revisions (e.g., MOVES2010a). However, in some cases, EPA has specifically referred to MOVES2010 and MOVES2010a for clarification.

MOVES incorporates the latest emissions data, more sophisticated calculation algorithms, increased user flexibility, new software design, and significant new capabilities. While these changes improve the quality of on-road mobile source inventories, the overall degree of change in the model's function also adds to the start-up time required for state and local agencies to transition from MOBILE6.2 to MOVES.

C. Why are we issuing this final rule?

Today's action provides additional time for nonattainment and maintenance areas to learn and apply MOVES for regional conformity analyses.[5] On October 13, 2011 (76 FR 63575), EPA proposed to extend the two-year grace period to provide an additional year for state and local agencies to transition to using MOVES for regional conformity analyses.[6] As stated in the proposal, EPA was contacted by several state and local transportation and air quality agencies and associations that requested additional transition time for using MOVES in regional conformity analyses, due to the significant software, operational and technical differences between MOVES and MOBILE. These agencies were concerned about having sufficient time to build technical capacity for using MOVES as well as completing such analyses and making

[1] 40 CFR 93.102(b)(1) defines $PM_{2.5}$ and PM_{10} as particles with an aerodynamic diameter less than or equal to a nominal 2.5 and 10 micrometers, respectively.

[2] EPA announced the release of MOBILE6.2 in 2004 (69 FR 28830).

[3] See Section III. for further background on the use of latest emissions models and grace periods for conformity purposes.

[4] See EPA's MOVES2010a Questions and Answers at: *www.epa.gov/otaq/models/moves/MOVES2010a/420f10050.pdf.*

[5] MPOs in nonattainment and maintenance areas conduct regional conformity analyses to demonstrate that transportation plans and TIPs are consistent with the air quality purposes of the SIP. Regional conformity analyses are also conducted in isolated rural areas (defined by 40 CFR 93.101).

[6] A direct final rule was also published on October 13, 2011 (76 FR 63554) in parallel with the proposal. However, EPA received an adverse comment within the 30-day public comment period, and subsequently withdrew the direct final rule on December 5, 2011 (76 FR 75797).

any necessary SIP and/or transportation plan/TIP changes to assure conformity in the future.

During the comment period, EPA received one comment letter that was relevant to the October 2011 proposal.[7] EPA is finalizing the regional conformity grace period extension as proposed, and is not making any changes after consideration of comments. This final rule is critical to helping state and local agencies during this unique transition. See Section III. for additional discussion.

Finally, EPA notes that today's action does not affect our previous approvals for using MOVES for official SIP submissions developed outside of California.[8] Today's rulemaking also does not affect the existing grace period before MOVES is required for $PM_{2.5}$, PM_{10}, and CO hot-spot analyses for project-level conformity determinations (75 FR 79370). For further information regarding EPA's previous model approvals and conformity policy guidance/implementation, see EPA's transportation conformity Web site at *www.epa.gov/otaq/stateresources/transconf/policy.htm.* EPA coordinated closely with DOT in developing today's action, and DOT concurs on this final rule.

III. Extension of MOVES Regional Conformity Grace Period

A. Background

CAA section 176(c)(1) states that ''* * * [t]he determination of conformity shall be based on the most recent estimates of emissions, and such estimates shall be determined from the most recent population, employment, travel, and congestion estimates * * *'' To meet this requirement, section 93.111(a) of the conformity rule requires that conformity determinations be based on the latest motor vehicle emissions model approved by EPA. When EPA approves a new emissions model, EPA consults with DOT to establish a grace period before the model is required for conformity analyses (40 CFR 93.111(b)). EPA must consider the following factors when establishing a grace period for conformity determinations (40 CFR 93.111(b)(2)):

''The length of the grace period will depend on the degree of change in the model and the scope of re-planning likely to be necessary by MPOs in order to assure conformity.''

The conformity rule provides for a grace period for new emissions models of between three and 24 months (40 CFR 93.111(b)(1)).

In the preamble to the original 1993 conformity rule, EPA articulated its intentions for establishing the length of a conformity grace period for a new emissions model (58 FR 62211):

> EPA and DOT will consider extending the grace period if the effects of the new emissions model are so significant that previous SIP demonstrations of what emission levels are consistent with attainment would be substantially affected. In such cases, states should have an opportunity to revise their SIPs before MPOs must use the model's new emissions factors. EPA encourages all agencies to inform EPA of the impacts of new emissions models in their area, and EPA may pause to seek such input before determining the length of the grace period.

The provisions in section 93.111, including the use of the latest emissions model and the establishment of a new model grace period, have not changed since 1993, and have been implemented successfully for many previous model transitions.

B. Description of Final Rule

In today's action, EPA is providing an additional year to the maximum time period permitted under the pre-existing regulations before MOVES is required for regional conformity analyses. As a result, EPA is also announcing in today's **Federal Register** that MOVES will be required for new regional conformity analyses that begin after March 2, 2013. The previously established two-year conformity grace period would have ended on March 2, 2012 (75 FR 9411).

Under today's action, state and local agencies outside California can use MOVES for regional conformity analyses that begin before or on March 2, 2013. However, MOVES will be required prior to the end of the extended grace period for any new regional conformity analyses once an area has MOVES-based SIP motor vehicle emissions budgets (''budgets'') that have been found adequate or approved for conformity purposes.

Today's action adds a new paragraph (b)(3) to section 93.111 of the conformity rule, which applies to the transition from MOBILE to MOVES only. EPA notes that the regulatory text in today's final rule is clarified from what was proposed,[9] since the grace period applies to MOVES2010 and minor revisions to MOVES2010. A minor revision, such as MOVES2010a, is a version that would not significantly affect the criteria pollutant emissions results from MOVES2010. Minor revisions will not start a new grace period for regional conformity analyses and could include performance enhancements that reduce MOVES run time or other model improvements. EPA would evaluate any future major model update as a ''new model'' under the conformity rule's previously established requirements in section 93.111(b)(1) and (2), including any new conformity grace period as warranted. EPA will note at the time of a future model release whether an approved model version is a minor revision to MOVES2010 or is to be considered a ''new model'' under the rule.

Between now and the end of the extended conformity grace period (March 2, 2013), areas should use the interagency consultation process to examine how MOVES results will impact their future metropolitan transportation plan/TIP conformity determinations. Isolated rural areas should also consider the impact of MOVES on future regional conformity analyses. Agencies should carefully consider whether the SIP and its budgets should be revised with MOVES or if transportation plans and TIPs should be revised before the end of the conformity grace period, since doing so may be necessary to ensure conformity in the future.

In general, regional conformity analyses that are started during the grace period can use either MOBILE6.2 or MOVES. When the grace period ends on March 2, 2013, MOVES must be used for new regional conformity analyses outside California. This means that all new regional conformity analyses started after March 2, 2013 must be based on MOVES, even if the SIP is based on MOBILE6.2 or earlier versions of MOBILE.

EPA encourages state and local agencies to use the latest version of the MOVES model available at the time that regional emissions modeling begins, since the model framework enhancements included in such versions will optimize model performance. If you have questions about which model should be used in your conformity determination, you can consult with your EPA Regional Office. For complete explanations of how MOVES is to be implemented for transportation conformity, including details about using MOVES during the

[7] A second comment was submitted that raised issues not germane to this rulemaking.

[8] MOVES is not approved for use in California. EPA approved and announced the latest version of California's EMFAC model (EMFAC2007) for SIP development and regional conformity analyses in that state on January 18, 2008 (73 FR 3464).

[9] The proposed text did not explicitly refer to MOVES2010, but instead referred to ''the *MOVES2010a* emissions model (and minor model revisions)'').

grace period, refer to EPA's latest MOVES policy guidance.[10]

C. Rationale and Response to Comments

Today's final rule is consistent with CAA requirements and critical to supporting state and local agencies in this unique transition. EPA continues to believe its MOVES model is the best tool for estimating criteria pollutant emissions, and it is a significant improvement over previous MOBILE models. EPA recognizes that state and local agencies have made significant progress to date in using MOVES, and we will continue to support these efforts. However, as discussed in the October 2011 proposal and further below, challenges related to the transition from MOBILE to MOVES have been much greater than past transitions between MOBILE model versions. Today's action ensures that state and local governments have the necessary time to implement the CAA conformity requirements as originally intended.

Since 1993, the fundamental purpose of section 93.111(b) of the conformity rule has been to provide a sufficient amount of time for MPOs and other state and local agencies to learn and employ new emissions models. As discussed in the October 2011 proposal and further below, the transition to a new emissions model for conformity involves more than learning to use the new model and preparing input data and model output. After model start-up is complete, state and local agencies also need to consider how the model affects regional conformity analysis results and whether SIP and/or transportation plan/TIP changes are necessary to assure future conformity determinations. EPA believes that the final rule's one-time extension of the regional grace period for MOVES2010 and subsequent minor revisions is consistent with section 93.111(b)(2) and the CAA.

EPA received one comment letter that was relevant to the October 2011 proposal. EPA has summarized this comment letter with our responses in the remainder of this section.

The commenter believed the proposal was arbitrary and capricious and inconsistent with CAA section 176(c)(1) because it did not require areas to use the latest emissions factors when making conformity determinations. The commenter believed that Congress intended regional conformity analyses for transportation plans and TIPs to be based on EPA's latest motor vehicle emissions factors.[11]

EPA has not made changes in response to these comments, which raise issues for conformity rule provisions that were finalized in 1993 (58 FR 62211) and which EPA did not propose to revise in this action. Specifically, in 1993, EPA established the existing rule provisions that a conformity grace period of between 3 and 24 months could be established for new model releases (40 CFR 93.111(b)(1)), as well as the factors that EPA uses when determining the length of a grace period (40 CFR 93.111(b)(2)). As a result, EPA has used its existing discretion many times since 1993 to approve new emissions models and establish grace periods consistent with these requirements.

In the proposal for today's final rule, EPA did not propose to reopen the question of whether the Agency has the discretion to establish a grace period before which the use of a new emissions model is required for conformity purposes, nor did the proposed rule address the factors to be considered in establishing an appropriate grace period. EPA's statutory authority to establish a grace period is not at issue in this rulemaking.[12] Rather, the only issue addressed in the proposed rule was the appropriate length of the grace period for MOVES—specifically, whether allowing an additional year for the MOVES regional conformity grace period is reasonable. EPA believes that it is, based on the degree of model change and the scope of re-planning necessary as further described in this section.

The commenter believed that MOVES is based on the latest emissions factors, and MOBILE6.2 is not appropriate for estimating emissions. EPA agrees that the MOVES model is the best tool for estimating motor vehicle emissions and is based on the latest science. When EPA approves any new emissions model, the Agency is stating that it is an improvement over the existing model. Therefore, it will always be the case that new models that are approved are better than previous models. However, the issue raised in EPA's proposed rule was not the validity of using MOVES instead of MOBILE6.2, but whether state and local agencies have sufficient time to transition to using MOVES for future regional conformity analyses. The one-year extension provided by the final rule is reasonable and consistent with the existing rule's requirements for establishing grace periods for new emissions models.

The commenter also believed that the October 2011 proposal was inconsistent with the law because it exceeded the maximum two-year grace period length in section 93.111(b)(1) of the conformity rule. While it is true that the one-year grace period extension is longer than the two-year grace period in the existing conformity rule for other emissions model transitions, this fact does not make the final rule's extension inconsistent with the CAA. EPA believes that today's final rule is reasonable and meets statutory requirements.

The commenter argued that ''[t]he need for agency staff to learn how to apply MOVES provides no justification for the continued use of [MOBILE6.2] * * *'' EPA disagrees that it is arbitrary for EPA to consider this need. In fact, the pre-existing regulations require EPA to consider start-up needs whenever a new grace period is established, and EPA did not propose to revise these factors.

As stated above and in the October 2011 proposal, section 93.111(b)(2) of the conformity rule requires the length of the grace period to be based on two factors. The first factor in this provision is ''the degree of change in the model.'' EPA described extensively in its proposal how this particular transition from MOBILE to MOVES creates a unique learning curve for state and local agencies. The following is a summary of the major model changes that were noted in the proposal for this transition:

- *New model framework and software:* Whereas MOBILE6.2 was written in FORTRAN and used simple text files for data input and output, MOVES is written in JAVA and uses a relational database structure in MYSQL to handle input and output as data tables.[13]
- *New model input and output structure:* MOVES significantly changes the basic input and output structure for emissions modeling, as compared to previous emissions models that have been essentially unchanged since the early 1980s. Before MOVES can be used by state and local agencies, MOBILE-based input data will need to be converted for use in MOVES. MPOs may

[10] See *www.epa.gov/otaq/stateresources/transconf/policy.htm.*

[11] Although the commenter referred to ''legislative history'' in making this comment, no documentation or citations to specific legislative history were submitted with the comment.

[12] EPA notes that on May 26, 1994 the commenter filed a Petition for Reconsideration of the November 1993 conformity rule (58 FR 62188), but did not raise issues related to section 93.111(b) in that petition.

[13] Some states have found it necessary to purchase new computers with additional capacity and features for running MOVES.

also need to revise the way model output is post-processed.

EPA has created tools and provided technical assistance for the MOBILE to MOVES transition, and EPA and DOT have provided hands-on MOVES training in many states.[14] EPA will continue to work with state and local agencies throughout the regional conformity grace period extension. See the October 2011 proposal for further details on the differences between MOBILE and MOVES (76 FR 63577–78).

The other factor that EPA must consider under section 93.111(b)(2) is the ''scope of re-planning likely to be necessary by MPOs in order to assure conformity.'' As in any new model transition, state and local agencies need to consider how results from using a new emissions model will affect their ability to conform when the new model is required for regional conformity analyses. When emissions are higher with a new model compared to the previous model, the ''scope of re-planning'' can entail revising a SIP strategy and budget that is based on the previous model and/or revising a transportation plan/TIP.[15] Updating a SIP budget with MOVES, for example, involves preparing new data input and output for MOVES, re-running the on-road mobile source inventory with MOVES, ensuring this new inventory continues to support the SIP's demonstration (and making any adjustments to other inventories as needed), coordinating the SIP submission with other agencies, and meeting other state and federal requirements for SIP submissions (e.g., providing public notice and comment). None of these steps can be taken until state and local agencies learn how to run MOVES and obtain results, as results inform whether a revision is even needed. Unlike past model transitions, the start-up involved in building technical capacity for MOVES appears to have postponed state and local ''re-planning'' decisions on whether any updates to SIP budgets or transportation plans/TIPs are needed. The final rule's additional year directly provides the necessary time for considering the implications as EPA originally intended.

EPA's decision to finalize this rulemaking is also supported by stakeholder feedback that was received in implementing the MOVES transition. Starting in September 2010, EPA was contacted by several state and local transportation and air agencies that were concerned that there was insufficient transition time before MOVES would be required in regional conformity analyses. At the time, the conformity grace period for MOVES would have expired on March 2, 2012. EPA Regional Offices confirmed the status of the transition in their nonattainment and maintenance areas. These general communications occurred until March of 2011 and informed EPA's decision to proceed with this rulemaking.[16] Although EPA had provided MOVES training for regional conformity analyses in most states, as of March of 2011 (one year after the original conformity grace period had begun), due to the major model changes mentioned earlier, EPA was concerned that most nonattainment and maintenance areas needed more time to build technical capacity for using MOVES as well as sufficient transition time for using MOVES in regional conformity analyses. We believe that state and local agencies are making a good faith effort to transition to MOVES in a timely manner, but the start-up issues have taken longer than originally anticipated.

The commenter also believed the proposal would allow areas to delay additional reductions, in areas where emissions with MOVES would be higher than with MOBILE. The commenter stated that EPA did not candidly disclose which areas could use the proposed grace period extension and how the rule could adversely affect public health.

The commenter mischaracterizes the regulatory purpose of the emissions model grace period provisions as well as EPA's reasons for establishing a longer grace period for this model transition. As described above, since 1993, EPA has clearly stated that the conformity grace period for a new emissions model is to be based on the two factors provided in 40 CFR 93.111(b)(2), and which are not at issue in this rulemaking.

As described above, it has taken longer than anticipated for MPOs to complete emissions analyses with MOVES, and to ascertain the implications of using MOVES on future conformity determinations. In other words, it has taken longer for MPOs to know how MOVES would affect future regional conformity analyses, because they are building technical capacity and addressing other start-up issues. Potential changes in emissions estimates are unrelated to the issue in this rulemaking, i.e., the appropriate length of the grace period for use of MOVES in regional conformity analyses.

In addition, the grace period extension applies equally to all nonattainment and maintenance areas. EPA did not need to ''disclose'' which areas could use the additional year because every nonattainment and maintenance area can use the additional year. Every area has the discretion of using either MOBILE6.2 or MOVES for transportation conformity during this additional year, unless the area's SIP is updated with MOVES first. In those cases, as described above, MOVES must be used in transportation plan and TIP conformity determinations made after those MOVES-based budgets are found adequate or approved. This was clearly stated in the October 2011 proposal (76 FR 63578).

EPA does not agree that the rule is arbitrary and capricious because it did not disclose how the rule could adversely affect public health. The commenter also mischaracterized the conformity rule's requirements by implying that the extended grace period will allow areas to avoid meeting their applicable SIP budgets in regional conformity analyses (40 CFR 93.109, 93.118). Regardless of what model is required for a given conformity determination, MPOs are required by the CAA and the conformity rule to meet applicable SIP budgets in regional conformity analyses. Today's final rule does not change these requirements. Today's action does not relieve an area's statutory obligation to attain the NAAQS by its attainment date and thereby protect public health or EPA's air quality planning obligations under the CAA. Furthermore, the final rule does not waive EPA's SIP requirements for using the latest emissions model when a SIP is developed, and does not change the conformity grace period for using MOVES in project-level conformity analyses.[17] The implications

[14] To date, EPA and DOT staff have provided a 2-day hands-on MOVES course for regional emissions inventories (including regional conformity analyses) at over 25 locations around the country. In addition, since January 2010, EPA has sent more than 2,500 responses to requests for help with MOVES that have come into EPA's email box for modeling questions (*mobile@epa.gov*).

[15] See the November 1993 conformity rule (58 FR 62211), the March 2, 2010 FR notice for EPA's approval of MOVES2010 for regional conformity analyses (75 FR 9411–9414), and EPA's latest MOVES policy guidance (*www.epa.gov/otaq/stateresources/transconf/policy.htm*).

[16] See EPA's September 14, 2011 memo entitled, ''Summary of Stakeholder Contact Prior to MOVES Grace Period Extension Rulemaking.'' EPA has added other documentation to the docket regarding state and local progress during this MOVES transition.

[17] As noted in the October 2011 proposal, the transition to MOVES for project-level hot-spot analyses does not involve the complexity associated at the regional level, where ''re-planning'' under 40 CFR 93.111(b)(2) is necessary for some areas (i.e., SIP budgets and/or transportation plans/TIPs may

of changes in on-road mobile source emission inventories and/or control strategies will differ, and as result, need to be evaluated based on the unique circumstances of each nonattainment or maintenance area.

EPA is finalizing a one-year extension only for the MOBILE to MOVES transition for regional conformity analyses. The final rule's one-time extension is not indefinite. After March 2, 2013, MOVES must be used for new regional conformity analyses, whether or not start-up or re-planning issues have been addressed. EPA believes this additional year appropriately addresses the circumstances in the field and the need to meet statutory requirements for using latest emissions models in a timely manner.

The commenter also alleges that EPA staff stated that the primary purpose for this rulemaking was to allow nonattainment and maintenance areas to avoid a conformity lapse where MOVES produces higher emissions than MOBILE-based SIP budgets.[18] This statement is incorrect. Today's final rule does not amend the existing conformity rule's provisions for frequency (40 CFR 93.104) or conformity lapses (40 CFR 93.102(c)). EPA did not undertake this rulemaking to address any specific area's conformity issues or to avoid conformity lapses, but rather to provide a reasonable amount of time for all areas to prepare to use MOVES and revise existing SIP budgets and/or transportation plans/TIPs as needed. Any conformity issues for individual areas will need to be addressed according to all conformity requirements.

Finally, the commenter highlighted several court decisions to support his comments. However, the cases cited by the commenter are irrelevant to the final rule because the cases involved challenges to the technical underpinnings of various models.[19] In contrast, EPA is not approving or relying on any model in today's action. Instead, it is making a determination as to the time period that is needed before it is appropriate to require state and local agencies to use MOVES, given the planning and preparation involved before the model can be properly applied.

In summary, EPA is finalizing the regional conformity grace period extension as proposed, and is not making any changes after consideration of comments. This final rule is consistent with CAA requirements, the conformity rule, and precedent to date.

IV. Conformity SIPs

The MOVES regional grace period extension applies on the effective date of today's final rule in all nonattainment and maintenance areas. Section 51.390(a) of the conformity rule states that the federal rule applies for the portion of the requirements that are not included in a state's approved conformity SIP.[20] Section 51.390(b) further allows state conformity provisions to contain criteria and procedures that are more stringent than the federal requirements. However, in the case of states with conformity SIPs that include the grace period provision in 40 CFR 93.111(b)(1), EPA concludes that such states did not intend to require a shorter grace period than EPA, in consultation with DOT, believes is needed. Therefore, since the MOVES grace period extension is a new provision being added to the conformity rule, it is not included in any current state conformity SIP and therefore applies immediately in all areas pursuant to section 51.390(a).

In addition, section 51.390(c) of the conformity rule requires states to submit a new or revised conformity SIP to EPA within 12 months of the **Federal Register** publication date of any final conformity amendments for certain situations. States with approved conformity SIPs that are prepared in accordance with current CAA requirements are not required to submit new conformity SIP revisions, since section 93.111 of the conformity rule is not contained in these SIPs. A conformity SIP prepared in accordance with current CAA requirements contains only the state's criteria and procedures for interagency consultation (40 CFR 93.105) and two additional provisions related to written commitments for certain control and mitigation measures (40 CFR 93.122(a)(4)(ii) and 93.125(c)). However, states with approved conformity SIPs that include section 93.111 from a previous rulemaking are required to submit a SIP revision by February 27, 2013, although EPA strongly encourages these states to submit a SIP revision with only the three required provisions.[21] A state without an approved conformity SIP is not required to submit a new conformity SIP within one year of today's action, but previous conformity SIP deadlines continue to apply.

For additional information on conformity SIPs, please refer to the January 2009 guidance entitled, ''Guidance for Developing Transportation Conformity State Implementation Plans'' available on EPA's Web site at: *www.epa.gov/otaq/stateresources/transconf/policy/420b09001.pdf.*

V. Statutory and Executive Order Reviews

A. Executive Order 12866: Regulatory Planning and Review

This action is not a ''significant regulatory action'' under the terms of Executive Order 12866 (58 FR 51735, October 4, 1993) and is therefore not subject to review under Executive Orders 12866 and 13563 (76 FR 3821, January 21, 2011).

B. Paperwork Reduction Act

This action does not impose any new information collection burden. The information collection requirements of EPA's existing transportation conformity regulations and the revisions in today's action are already covered by EPA's information collection request (ICR) entitled, ''Transportation Conformity Determinations for Federally Funded and Approved Transportation Plans, Programs and Projects.'' OMB has previously approved the information collection requirements contained in the existing regulations at 40 CFR Part 93 under the provisions of the Paperwork Reduction Act, 44 U.S.C. 3501 *et seq.* and has assigned OMB control number 2060–0561. The OMB control numbers for EPA's regulations in 40 CFR are listed in 40 CFR part 9.

C. Regulatory Flexibility Act

The Regulatory Flexibility Act (RFA) generally requires an Agency to prepare a regulatory flexibility analysis of rules subject to notice-and-comment rulemaking requirements under the Administrative Procedure Act or any other statute unless the Agency certifies that the rule will not have a significant economic impact on a substantial number of small entities. Small entities

need to be revised before regional conformity analyses based on MOVES can be completed).

[18] The commenter included his notes taken during an informal conversation with EPA staff that occurred prior to the development of the October 2011 proposal.

[19] These cases include *Small Refiner Lead Phase-Down Task Force* v. *EPA,* 705 F.2d 506, 534 (challenge to cost analysis based on Department of Energy refinery modeling) and *American Iron and Steel* v. *EPA,* 115 F.3d 979, 1004 (challenge to Agency calculation of mercury bioaccumulation factor under Clean Water Act).

[20] A conformity SIP is required by the CAA and contains a state's conformity requirements, including the state's specific interagency consultation procedures.

[21] The conformity SIP may contain provisions more stringent than the federal requirements, and in these cases, states must specify this intention in its conformity SIP submission.

include small businesses, small not-for-profit organizations and small government jurisdictions.

For purposes of assessing the impacts of today's rule on small entities, small entity is defined as: (1) A small business as defined by the Small Business Administration's (SBA) regulations at 13 CFR 121.201; (2) a small governmental jurisdiction that is a government of a city, county, town, school district or special district with a population of less than 50,000; and (3) a small organization that is any not-for-profit enterprise that is independently owned and operated and is not dominant in its field. After considering the economic impacts of today's rule on small entities, I certify that this action will not have a significant economic impact on a substantial number of small entities. This regulation directly affects federal agencies and MPOs that, by definition, are designated under federal transportation laws only for metropolitan areas with a population of at least 50,000. These organizations do not constitute small entities within the meaning of the RFA. Therefore, this rule will not impose any requirements on small entities.

D. Unfunded Mandates Reform Act (UMRA)

This rule does not contain a Federal mandate that may result in expenditures of $100 million or more for state, local, and tribal governments, in the aggregate, or the private sector in any one year. This rule merely implements already established law that imposes conformity requirements and does not itself impose requirements that may result in expenditures of $100 million or more in any year. Thus, today's rule is not subject to the requirements of sections 202 and 205 of the UMRA.

This rule is also not subject to the requirements of section 203 of UMRA because it contains no regulatory requirements that might significantly or uniquely affect small governments. This rule will not significantly or uniquely impact small governments because it directly affects federal agencies and MPOs that, by definition, are designated under federal transportation laws only for metropolitan areas with a population of at least 50,000.

E. Executive Order 13132: Federalism

This rule does not have federalism implications. It will not have substantial direct effects on states, on the relationship between the national government and states, or on the distribution of power and responsibilities among the various levels of government, as specified in Executive Order 13132. The CAA requires conformity to apply in certain nonattainment and maintenance areas as a matter of law, and today's action merely revises one provision for transportation planning entities in subject areas to follow in meeting their existing statutory obligations. Thus, EO 13132 does not apply to this rule.

F. Executive Order 13175: Consultation and Coordination With Indian Tribal Governments

This action does not have tribal implications, as specified in Executive Order 13175 (65 FR 67249, November 9, 2000). The CAA requires transportation conformity to apply in any area that is designated nonattainment or maintenance by EPA. Because today's rule does not significantly or uniquely affect the communities of Indian tribal governments, EO 13175 does not apply to this action.

G. Executive Order 13045: Protection of Children From Environmental Health and Safety Risks

This rule is not subject to Executive Order 13045 (62 FR 19885, April 23, 1997) because it is not economically significant as defined in EO 12866, and because the Agency does not believe the environmental health or safety risks addressed by this action present a disproportionate risk to children.

H. Executive Order 13211: Actions Concerning Regulations That Significantly Affect Energy Supply, Distribution, or Use

This action is not subject to Executive Order 13211 (66 FR 28355 (May 22, 2001)), because it is not a significant regulatory action under Executive Order 12866.

I. National Technology Transfer and Advancement Act

Section 12(d) of the National Technology Transfer and Advancement Act of 1995 (NTTAA), Public Law 104–113, section 12(d) (15 U.S.C. 272 note) directs EPA to use voluntary consensus standards in its regulatory activities unless to do so would be inconsistent with applicable law or otherwise impractical. Voluntary consensus standards are technical standards (e.g., material specifications, test methods, sampling procedures, and business practices) that are developed or adopted by voluntary consensus standards bodies. The NTTAA directs EPA to provide Congress, through OMB, explanations when the Agency decides not to use available and applicable voluntary consensus standards. This rule does not involve technical standards. Therefore, EPA is not considering the use of any voluntary consensus standards.

J. Executive Order 12898: Federal Actions To Address Environmental Justice in Minority Populations and Low-Income Populations

Executive Order 12898 (59 FR 7629 (Feb. 16, 1994)) establishes federal executive policy on environmental justice. Its main provision directs federal agencies, to the greatest extent practicable and permitted by law, to make environmental justice part of their mission by identifying and addressing, as appropriate, disproportionately high and adverse human health or environmental effects of their programs, policies, and activities on minority populations and low-income populations in the United States.

EPA has determined that this rule will not have disproportionately high and adverse human health or environmental effects on minority or low-income populations. The final rule involves a minor revision that provides administrative relief but does not change the conformity rule's underlying requirements for regional conformity analyses.

K. Congressional Review Act

The Congressional Review Act, 5 U.S.C. 801 *et seq.,* as added by the Small Business Regulatory Enforcement Fairness Act of 1996, generally provides that before a rule may take effect, the agency promulgating the rule must submit a rule report, which includes a copy of the rule, to each House of the Congress and to the Comptroller General of the United States. EPA will submit a report containing this rule and other required information to the U.S. Senate, the U.S. House of Representatives, and the Comptroller General of the United States prior to publication of the rule in the **Federal Register.** A major rule cannot take effect until 60 days after it is published in the **Federal Register.** This action is not a major rule as defined by 5 U.S.C. 804(2). This rule will be effective *February 27, 2012.*

List of Subjects in 40 CFR Part 93

Administrative practice and procedure, Air pollution control, Carbon monoxide, Clean Air Act, Environmental protection, Highways and roads, Intergovernmental relations, Mass transportation, Nitrogen dioxide, Ozone, Particulate matter, Transportation, Volatile organic compounds.

Dated: February 15, 2012.

Lisa P. Jackson,

Administrator.

For the reasons discussed in the preamble, 40 CFR Part 93 is amended as follows:

PART 93—[AMENDED]

■ 1. The authority citation for Part 93 continues to read as follows:

Authority: 42 U.S.C. 7401–7671q.

■ 2. Section 93.111 is amended by adding paragraph (b)(3) to read as follows:

§ 93.111 Criteria and procedures: Latest emissions model.

* * * * *

(b) * * *

(3) Notwithstanding paragraph (b)(1) of this section, the grace period for using the MOVES2010 emissions model (and minor revisions) for regional emissions analyses will end on March 2, 2013.

* * * * *

[FR Doc. 2012–4484 Filed 2–24–12; 8:45 am]

BILLING CODE 6560–50–P

ENVIRONMENTAL PROTECTION AGENCY

40 CFR Part 140

[EPA–R09–OW–2010–0438; FRL–9633–9]

RIN 2009–AA04

Marine Sanitation Devices (MSDs): No Discharge Zone (NDZ) for California State Marine Waters

AGENCY: Environmental Protection Agency (EPA).

ACTION: Final rule.

SUMMARY: The U.S. Environmental Protection Agency (EPA) is establishing a No Discharge Zone (NDZ) for marine waters of the State of California for sewage discharges from: all large passenger vessels of 300 gross tons or greater; and from large oceangoing vessels of 300 gross tons or greater with available holding tank capacity or containing sewage generated while the vessel was outside of the marine waters of the State of California, pursuant to Section 312(f)(4)(A) of the Clean Water Act (CWA), 33 U.S.C. 1322(f)(4)(A). This action is being taken in response to an April 5, 2006, application from the California State Water Resources Control Board requesting establishment of this NDZ. Based on the State's application, EPA has determined that the protection and enhancement of the quality of California's marine waters requires the prohibition of sewage discharges from two classes of large vessels. For the purposes of today's rule, the marine waters of the State of California are defined as the territorial sea measured from the baseline, as determined in accordance with the Convention on the Territorial Sea and the Contiguous Zone, and extending seaward a distance of three miles and including all enclosed bays and estuaries subject to tidal influences from the Oregon border to the Mexican border. State marine waters extend three miles from State islands, including the Farallones and the Northern and Southern Channel Islands.

DATES: This final rule is effective March 28, 2012.

ADDRESSES: EPA has established a docket for this action under Docket ID No. EPA–R09–OW–2010–0438. All documents in the docket are listed on the *www.regulations.gov* Web site. Although listed in the index, some information is not publicly available, e.g., confidential business information (CBI) or other information whose disclosure is restricted by statute. Certain other material, such as copyrighted material, is not placed on the Internet and will be publicly available only in hard copy form. Publicly available docket materials are available either electronically through *www.regulations.gov* or in hard copy at the Water Division, U.S. Environmental Protection Agency Region IX, 75 Hawthorne Street, San Francisco, CA 94105–3901. EPA requests that if at all possible, you contact the person listed in the **FOR FURTHER INFORMATION CONTACT** section to schedule an appointment. The Regional Office's business hours are Monday through Friday, 8:30 to 5, excluding Federal holidays.

FOR FURTHER INFORMATION CONTACT: Mr. Paul Amato at (415) 972–3847 or *amato.paul@epa.gov*.

SUPPLEMENTARY INFORMATION:

I. Background
II. Summary of Final Action
III. Response to Comments
A. Overview
B. Public Comments
1. Protection of California's Coastal Resources
2. Expansion of the Rule
3. Scope and Applicability of CWA Section 312(f)(4)(A)
4. Classes of Vessels
5. Large Oceangoing Vessel Sewage Holding Capacity
6. Applying a No Discharge Zone for All California Marine Waters
7. Other General Comments
IV. Administrative Requirements

I. Background

The proposed rule was published in the September 2, 2010, issue of the **Federal Register** (75 FR 53914). A 60-day comment period followed that ended on November 1, 2010, during which time EPA Region IX received approximately 2,020 comment letters and emails, including 16 distinct letters and approximately 2,000 substantially identical letters. Section III addresses the comments.

Clean Water Act Section 312, 33 U.S.C. 1322, (hereafter referred to as ''Section 312''), regulates the discharge of sewage from vessels into the navigable waters. Pollutants most frequently associated with sewage discharges include solids, nutrients, pathogens, petroleum products, heavy metals, pesticides, pharmaceuticals, and other potentially harmful compounds.[1] Sewage discharges can contaminate shellfish beds, pollute drinking water supplies, harm fish and other aquatic wildlife, and cause damage to coral reefs. Direct contact with these pollutants can have serious human health effects, with children, the elderly, and individuals with compromised immune systems being most susceptible. Currently, California marine waters include 120 miles of coast that are listed as impaired for pathogens commonly associated with sewage.

Clean Water Act Section 312(h) prohibits vessels equipped with installed toilet facilities from operating on the navigable waters (which include the three mile territorial seas), unless the vessel is equipped with an operable marine sanitation device (MSD), certified by the Coast Guard to meet applicable performance standards. 33 U.S.C. 1322(h). The provisions of Section 312 are implemented jointly by EPA and the Coast Guard. EPA sets performance standards for MSDs and is involved in varying degrees in the establishment of NDZs for vessel sewage. 33 U.S.C. 1322(b) and (f). The Coast Guard is responsible for developing regulations governing the design, construction, certification, installation and operation of MSDs, consistent with EPA's performance standards. 33 U.S.C. 1322(b) and (g); see also 33 CFR part 159. The Coast Guard's responsibility includes certifying MSDs for installation on U.S. flagged vessels. Under some circumstances, vessel sewage discharges treated by an MSD

[1] The State of California's ''Application for Permission to Prohibit Sewage Discharges from Vessels in California's Waters Pursuant to Clean Water Act Section 312(f)(4)(A)'' at page 33 (Apr. 5, 2006).

may contain higher concentrations of pollutants than discharges of treated sewage from land-based wastewater treatment plants and may cause or contribute to water quality impairments and impacts to sensitive marine habitats. In 2000, an Alaska Cruise Ship Initiative study sampled 21 cruise ships twice during the cruise season and found that 57 percent of the samples exceeded fecal coliform effluent limits and 78 percent exceeded suspended solids effluent limits for Type II MSDs.[2] Only one sample met the standards for both. The Coast Guard inspected six of the vessels with high effluent concentrations and found that five were exceeding limits due to improper MSD operation or maintenance, resulting in issuance of civil penalties.[3] EPA estimates that large passenger vessels and large oceangoing vessels generate 25.2 million gallons of sewage each year while in California State marine waters a number that is projected to grow. Data was not available to quantify how much of this sewage is currently discharged while vessels are present in California marine waters; however, as shown in Table 1, EPA used existing data to estimate that the final rule will prohibit the discharge of 22.5 million of the 25.2 million gallons of sewage that large vessels could otherwise legally discharge into California State marine waters each year. Small vessels without holding capacity, which are not regulated by today's rule, generate an additional 2.8 million gallons of sewage per year that can be legally discharged to California marine waters. A map of California State marine waters and the NDZ can be obtained or viewed at the EPA's Web site at *http://www.epa.gov/region9/water/no-discharge/overview.html,* or by calling (415) 972–3847.

TABLE 1—CALIFORNIA VESSEL SEWAGE CONTRIBUTIONS AND NDZ PROHIBITIONS

Sewage source	Vessel sewage generation in state waters (gallons/year)	Treated vessel sewage prohibited by this NDZ (gallons/year)
Addressed by this rule		
Large Passenger Vessels	19.2 million	19.2 million.
Large Oceangoing Vessels with available holding capacity	3.3 million *	3.3 million.
Combined =	22.5 million	22.5 million.
Not addressed by this rule		
Large Oceangoing Vessels without holding capacity	2.3 million *	No change.
Large Oceangoing Vessel discharges beyond holding tank capacity.	0.4 million	No change.
Small Vessels without holding capacity	2.8 million **	No change.
Combined =	5.5 million	No change.

* The sewage generation per year for large oceangoing vessels in this table (totaling 6 million gallons = 3.3 million + 2.7 million) differs from the 3.4 million gallons per year estimated in the proposed rule because it is derived from more recent data and analysis indicating that the rate of sewage generation is higher than estimated for the proposed rule. The Chamber of Shipping of America (CSA) had conducted a vessel sewage data survey in response to EPA's July 12, 2010, ''Clean Water Act Section 312(b): Notice Seeking Stakeholder Input on Petition and Other Request to Revise the Performance Standards for Marine Sanitation Devices,'' 75 FR 39683. This data and its analysis can be found in the docket for this final rule at *www.regulations.gov.*

** EPA estimate based on State of California small vessel usage data in their January 27, 2009 Application Addendum.

The State of California declared the importance of protecting coastal water from vessel sewage when it enacted the California Clean Coast Act of 2005 (Senate Bill (SB) 771) and related legislation in 2003–2005 to limit pollution from large passenger and large oceangoing vessels. In enacting this legislation, the State found that California's coastal waters warrant the higher level of protection that should be provided through an NDZ. California's highly varied marine environments support high levels of biological diversity and habitat for several dozen species listed as endangered, threatened, or of concern under Federal or State law and include designated essential habitat for nearly 100 species of fish along most of California's coast. The unique values associated with California's coastal marine environment have been recognized through the creation of a network of more than 200 protected areas, reserves, sanctuaries, and monuments that together afford special resource protection status to the vast majority of California coastal waters including the four Federally designated National Marine Sanctuaries (Cordell Bank, Gulf of the Farallones, Monterey Bay, and Channel Islands) that combined occupy approximately one-third of the coastline. Waters along the California coastline support important economic, recreational, conservation, research, educational, and aesthetic values, and are becoming increasingly more important for potable water supply as desalinization measures are used to meet demands.

CWA Section 312 generally preempts state regulation of the discharge of sewage from vessels: ''no state or political subdivision thereof shall adopt or enforce any statute or regulation of such state or political subdivision with respect to the design, manufacture, or installation or use of any [MSD] on any vessel subject to the provision of [CWA Section 312].'' 33 U.S.C. 1322(f)(1)(A). Under Section 312(f), however, a state may, in certain circumstances, request that EPA establish an NDZ for vessel sewage or, after required findings are made by EPA, establish such a zone themselves.

There are three types of NDZ designations. First, under Section 312(f)(3) states may designate portions or all of their waters as NDZs if the state determines that the protection and enhancement of the quality of the waters require greater environmental protection than provided by current Federal standards. However, no such prohibition applies to discharges until EPA determines that adequate facilities for the safe and sanitary removal and treatment of sewage from all vessels are reasonably available for the waters in the NDZ. Second, a state may apply under Section 312(f)(4)(A), as California did here, for an EPA determination that the protection and enhancement of the

[2] Exceeding these limits is only a violation if the operator was not discharging through a properly operated and maintained MSD.

[3] Alaska Department of Environmental Conservation, ''Alaska Cruise Ship Initiative, Part 2 Report'' (2001), *available at http://dec.alaska.gov/water/cruise_ships/cruiseinitiative.htm.*

quality of specified waters within such state requires a prohibition. In contrast to Section 312(f)(3) NDZ designations, Section 312(f)(4) does not require EPA to determine that adequate pump out facilities are reasonably available for all vessels. Upon its determination that the protection and enhancement of the quality of specified waters requires the prohibition, EPA shall by regulation completely prohibit the discharge from a vessel of any sewage (whether treated or not) into such waters. Lastly, a state may apply under Section 312(f)(4)(B) for EPA to establish, by regulation, a drinking water intake zone which prohibits the discharge of sewage into that zone. 33 U.S.C. 1322(f), 40 CFR 140.4.

The State of California, through the State Water Resources Control Board (State Board), applied to EPA for the establishment of an NDZ covering all California marine waters pursuant to Clean Water Act Section 312(f)(4)(A). As required by the California Clean Coast Act, the State Board's application requested a prohibition of sewage discharges from large passenger vessels and large oceangoing vessels with ''sufficient holding tank capacity'' to contain sewage while the vessels are within the marine waters of the State.

With today's rule, the EPA Region IX Administrator grants this application.

II. Summary of Final Action

EPA evaluated the State of California's CWA Section 312(f)(4)(A) application for the establishment of an NDZ throughout the marine waters of the State and other relevant information, and issued a notice of proposed rulemaking that would establish the requested NDZ based on the Agency's proposed determination that the protection and enhancement of the quality of these waters required it. EPA carefully considered the public comments on the proposed rule (available in the docket at *www.regulations.gov*), and concludes that nothing in these comments affects EPA's proposed determination that an NDZ is warranted for these waters. As discussed more fully below, EPA was convinced by some of the comments to make changes to the description of the class of covered large oceangoing vessels subject to the NDZ. The State has indicated that it finds these changes consistent with its NDZ petition.

As discussed more fully in the preamble to the proposed rule, California marine waters support a variety of unique, nationally important and biologically significant environments that contribute to California's recreational, economic, and aesthetic values. EPA estimates that this rule will prohibit the discharge of approximately 22.5 million gallons of treated vessel sewage per year that could otherwise enter California marine waters (EPA is unable to estimate how much of this treated sewage would actually enter California marine waters in the absence of this rule). This action will protect and enhance water quality, which will benefit human health by reducing the potential for exposure to pollutants from: recreational use of the waters, commercial fishing, shellfish bed operations, and water intakes for desalination plants. Similarly, this action will provide benefits to wildlife and their habitats.

On September 2, 2010, EPA proposed an NDZ covering all California marine waters which would be applicable to large passenger vessels and to large oceangoing vessels with two days or more sewage holding capacity. Based on the comments received for the proposed rule, EPA has changed the description of the class of covered large oceangoing vessels so that it applies to all large oceangoing vessels that have not fully utilized available holding tank capacity or that contain sewage generated outside the NDZ. Revising the definition will provide greater protection and enhancement of the covered waters and make compliance more feasible. The reasons for this change are addressed in more detail in Section III.

EPA is not changing the rule as it applies to passenger vessels, but has addressed a potential ambiguity by modifying the definition of ''large oceangoing vessel'' to make clear that it excludes any vessel defined as a ''large passenger vessel.''

Today's rule establishes an NDZ for the marine waters of the State of California that applies to two classes of vessels—(1) passenger vessels of 300 gross tons or more having berths or overnight accommodations, and (2) oceangoing vessels of 300 gross tons or more equipped with a holding tank which has not fully used the holding tank's capacity, or which contains more than *de minimis* amounts of sewage generated while the vessel was outside of the NDZ.[4] Vessels within these two classes are completely prohibited from discharging any sewage (whether treated or not) within the NDZ.

EPA expects today's rule will result in large oceangoing vessels with holding tanks maximizing use of their holding tank capacity while in the NDZ. In order to comply with the NDZ, a large oceangoing vessel with a holding tank will, in most cases, choose to empty its holding tank before entering California marine waters. While present in these waters, the vessel must refrain from discharging any sewage so long as it has any holding tank capacity. If the large oceangoing vessel reaches its holding tank capacity due only to sewage generated while in the NDZ, the vessel is no longer within the class of covered vessels and can discharge properly treated sewage in compliance with the NDZ. A vessel can choose to enter the NDZ without first emptying its holding tank, but then it may not discharge any sewage.

EPA recognizes that *de minimis* amounts of sewage may remain in the holding tank of a vessel that has fully discharged before entering State waters, and therefore has clarified in the rule that such *de minimis* amounts do not prohibit the vessel from discharging in State waters once its holding tank capacity is fully used. A holding tank is ''fully used'' when it has been filled to the point that safe and proper operation requires that it be discharged. EPA has also defined the term ''holding tank'' to make it clear that the rule does not intend for vessels' operators to use ballast tanks, or other tanks that have not been specifically designed, constructed, and fitted for holding sewage, to store sewage while vessels are operating in California marine waters.

This NDZ will not alter the ten existing NDZs in California, all of which were enacted pursuant to CWA Section 312(f)(3). These prior NDZs cover a relatively small portion of California's total marine waters and remain in effect for all vessels' (not just large passenger and oceangoing vessels). In addition, certain sewage discharges from vessels are prohibited under National Oceanic and Atmospheric Administration (NOAA) regulations for the four California marine sanctuaries. Nothing in today's rule affects these regulations.

III. Response to Comments

In response to the proposed rule, approximately 2,020 comment letters and emails were received including 16 distinct letters and approximately 2,000 substantially identical letters in support of the rule. Comments were provided by regulated entities, trade organizations, government officials, non-governmental organizations, and members of the public. The substantive comments are grouped together and addressed below.

[4] A vessel is subject to this rule if it is of 300 gross tons or greater as measured under the International Convention on Tonnage Measurement of Ships, 1969, measurement system in 46 U.S.C. 14302, or the regulatory measurement system of 46 U.S.C. 14502 for vessels not measured under 46 U.S.C. 14302.

A. Overview

Most of the comment letters expressed support for this rule because it will help protect California's marine biological resources, recreational opportunities, and human health from vessel sewage. Some of these commenters said the rule was necessary: (1) Because there is a need for stronger standards to protect coastal resources from vessel sewage; and (2) it will improve California marine waters for commercial fisheries, tourism, aesthetics, science and research. Some supporting commenters further suggested that the rule should be expanded: (1) To include California marine waters out to 12 nautical miles from shore; (2) to include all vessels; (3) to further regulate landside sources of pollution; (4) to improve inspection and testing procedures; (5) to improve vessel discharge monitoring; and (6) to specify penalties for violators. One supportive commenter expressed concerns with the legal basis for regulating military vessels and one commenter suggested that EPA's economic analysis was incomplete because it did not adequately consider impacts on small businesses.

Commenters opposed to the proposed rule expressed several concerns regarding its legal and scientific basis, which largely fall into these four categories of comments: (1) CWA Section 312(f)(4)(A) does not permit EPA to establish an NDZ applicable to a subset of vessels; (2) the proposed rule does not adequately support an NDZ for all of California marine waters; (3) the connection between vessel sewage and impacts to California waters has not been sufficiently demonstrated; and (4) the two-day holding capacity requirement for oceangoing vessels is arbitrary, inconsistent with CWA Section 312, and less protective than alternative approaches. The comments are addressed in detail below.

B. Public Comments

1. Protection of California's Coastal Resources

Many commenters expressed support for EPA's conclusion that the NDZ is required to protect California's coastal waters from pollutants found in vessel sewage. Approximately 2,000 similar comment letters urged EPA to approve California's application and stated that the NDZ would protect California's fragile ocean and coastal ecosystem from vessel sewage and improve water quality for beaches, fishing, shellfish beds, and human health. Another letter signed by 19 members of California's Congressional Delegation expressed strong support for EPA's proposed rule. Several commenters expressed concerns with anticipated increases in sewage discharges due to the growing cruise ship industry and the number of large oceangoing vessels in California waters. In addition, commenters said the NDZ was needed to protect the water quality of State and federally protected areas and to address inadequate Federal discharge and monitoring requirements of a growing cruise and shipping industry with a documented history of illegal discharges. Economic benefits of improving California's coastal resources were also provided as a reason for creating the NDZ. Some commenters stated that the information in California's application to EPA was sufficient to demonstrate the need for the rule under CWA Section 312.

The EPA agrees with these concerns about impacts to coastal water quality and is finalizing its determination that this NDZ is required to protect and enhance the quality of California marine waters. The information provided by the State and other sources demonstrates that California marine waters are a very important and sensitive resource that has been degraded by the discharge of sewage and would likely experience further degradation without the protections provided by this NDZ. This rule is expected to benefit California's fragile coastal resources by significantly reducing the discharge of pollutants that can occur in vessel sewage. Water quality data for vessel sewage is limited because monitoring is not required; however, EPA considered the 2000 Alaska Cruise Ship Initiative sewage sampling data from 21 cruise ships with Type II MSDs in determining that treated vessel sewage discharges can still contain pollutants in concentrations that exceed current Federal Type II MSD effluent limits.[5] Type II MSDs also do not remove nutrients and the biochemical oxygen demand loading which contribute to water quality degradation. Based on this information, and the likelihood that vessel traffic will continue to grow, EPA and the State of California have determined that even vessel sewage treated by an MSD that complies with CWA Section 312 standards may be a significant source of pollutants that have negative impacts on California's coastal resources.

2. Expansion of the Rule

Some of the commenters recommended expanding the rule to increase protection of California's coastal resources. One commenter recommended that EPA expand the distance of the proposed NDZ from three to twelve nautical miles from shore because winds and currents constantly move the sewage and even three miles from shore is too close to protect coastal resources. The commenter noted that some other Federal laws, such as the National Marine Sanctuaries Act, the Marine Plastic Pollution Research and Control Act of 1987, and the Ocean Dumping Act, address pollution within the 12-mile contiguous zone.

EPA recognizes that an NDZ does not impose a physical barrier to the movement of pollutants and understands the potential benefits of such an expansion, but the commenter's proposal would extend the NDZ beyond the limit of the CWA territorial seas, into the CWA contiguous zone, an area in which CWA Section 312 does not apply. See, e.g., CWA Section 312(b) (directing EPA to develop Federal standards of performance for MSDs discharging into ''navigable waters'') and CWA Sections 502(7) and (8) (defining ''navigable waters'' as including the ''territorial seas'' which extend ''seaward a distance of three miles''). Any request for action under the authorities cited by the commenter—even if potentially available—is outside the scope of today's action on California's application for an NDZ applicable to its waters, pursuant to CWA Section 312. EPA also notes that the U.S. Coast Guard, which is charged with enforcing this NDZ under CWA Section 312(k), measures the CWA's jurisdictional boundaries in ocean waters by using nautical miles. See, e.g., 33 U.S.C. part 2.

A commenter who supports establishment of an NDZ stated that the rule should be expanded to apply to all vessels, instead of just the classes of vessels requested by California's legislation. EPA recognizes that prohibiting all vessels from discharging treated sewage in California marine waters may have broader benefits for water quality; however, the commenter did not provide information for the record demonstrating that such an expansion is required for the protection and enhancement of the quality of the specified waters. The State specifically requested, and provided information in support of, an NDZ limited to large passenger vessels and large cargo vessels with adequate holding capacity. EPA approached the State Board about expanding the application to include all vessels, but the State Board determined

[5] As noted previously, such discharges may or may not be a regulatory violation, depending on whether or not they result from improper operation or maintenance of the device.

this would be contrary to the Legislature's instructions to limit the scope of the prohibition to the two specified classes of vessels. The State Board provided further support for the distinction between large and small vessels in an October 13, 2006, supplement to its CWA Section 312(f)(4)(A) application. The supplement cites a number of efforts directed at smaller vessels, including construction of pump-out facilities, educational outreach, and establishment of small NDZs under CWA Section 312(f)(3) in key harbor areas. The supplement also summarizes data from marina surveys of small vessels which showed that 80 percent of the estimated 841,000 recreational vessels in California marine waters lack Type I or II MSDs, which means that they are already prohibited from discharging to marine waters by the CWA. EPA reviewed this material and determined that the State's approach was reasonable because it would control discharges from two significant classes of vessels which, together, generate most of the sewage that could be legally discharged into State waters, whereas neither the State, nor any commenters, submitted evidence showing that it would be necessary to prohibit all discharges from the remaining classes of vessels to provide for the protection and enhancement of the quality of the State's waters.

One commenter asked EPA to consider regulating landside wastewater sources as well, including municipal discharge and wastewater treatment facilities, because they are a larger source of pollutants. EPA agrees that landside discharges are a more significant contributor to pollutants in coastal waters, but these discharges are outside the scope of today's rulemaking. Today's rule establishes an NDZ under CWA Section 312, which is limited to vessel sewage discharges only. Landside point-source discharges of pollutants are regulated through the National Pollution Discharge Elimination System (NPDES) under CWA Section 402, and nonpoint sources of pollution are regulated under CWA Section 319.

A commenter also suggested improved inspections, sampling, monitoring, penalties and passenger fees as ways to improve the rule. Specifically, the commenter noted that the United States Coast Guard (Coast Guard) should have authority to conduct unannounced inspections of regulated vessels in light of several previously confirmed vessel sewage discharge violations. These activities are beyond the scope of today's Section 312(f)(4)(A) rulemaking. We note that the Coast Guard has existing authority to inspect vessels and assess penalties under CWA Sections 312(j)–(l), as well as its general law enforcement authorities. 33 U.S.C. 1322(j)–(l); see also 14 U.S.C. 89.

3. Scope and Applicability of CWA Section 312(f)(4)(A)

Several commenters stated that CWA Section 312(f)(4)(A) requires a complete prohibition of discharges from *all* vessels upon the Administrator's determination that specified state waters require protection. These commenters stated that Section 312(f)(4) and 40 CFR 140.4(b) do not permit application of an NDZ to select vessel classes and that EPA must act on the State's application by either imposing an NDZ applicable to all vessels, or by not establishing an NDZ at all. One commenter further stated that it is implicit in Section 312(f)(4)(A) that NDZs are intended only for areas where sewage discharges are sufficiently impacting the marine ecosystem so as to justify banning them entirely.

As noted in the Notice of Proposed Rulemaking, this is the first time an NDZ has been proposed for specific categories of vessels. EPA is issuing the rule, applicable to two classes of large vessels, based on: (1) The scope of the State's NDZ application; (2) the evidence supporting a discharge ban with this defined scope; (3) lack of information demonstrating that an expansion is required, and (4) EPA's interpretation that Section 312(f)(4)(A) authorizes EPA to promulgate an NDZ for specific classes of vessels where appropriate.

The final rule is consistent with the State of California's application for an NDZ limited to all passenger vessels over 300 gross tons, and oceangoing vessels over 300 gross tons with sufficient holding tank capacity. The State legislature specifically directed the State Board to submit an application to EPA requesting an NDZ for only these two classes of vessels. As discussed above, EPA made its determination regarding the requested NDZ based on the record before it, which included information on sewage generation and the potential for sewage discharges to State waters from the subject classes of vessels and from other classes of vessels. The two subject classes of vessels are responsible for most of the sewage generated by vessels in California marine waters, an estimated 22.5 million gallons of 28 million total gallons generated and potentially discharged each year. The information obtained by EPA did not show that extension of the rule to all vessels was required to protect and enhance the quality of the State's waters. The commenters also did not provide information which shows that it is necessary to include these other classes of vessels within the scope of the rule to protect and enhance the quality of these waters.

Extending the rule to all vessels would also be unduly burdensome on the community of marine vessel owners and operators. By applying this rule to the two classes of large vessels, the vast majority of sewage discharges will be abated in these sensitive waters. As discussed previously, much of the vessel-generated sewage that is not covered by this rule is already required to be pumped out in harbor pump-out stations, or discharged outside the 3-mile limit of State marine waters, because most recreational and small commercial vessels lack a Type I or Type II MSD to treat their sewage. The remaining vessels without holding tanks (which are required by CWA Section 312 to treat their sewage with approved MSDs), account for a comparatively small portion of the total sewage generated in the State's marine waters.

EPA considered the different structure and wording of the NDZ provisions to conclude that Section (f)(4)(A) allows for an NDZ limited to specific classes of vessels, where appropriate. EPA believes that the contrast between the language in the NDZ provisions in Sections 312(f)(4)(A) and 312(f)(3) strongly suggest that Congress did not intend to foreclose the Agency from imposing an NDZ on a subset of vessels under the former where appropriate: Section 312(f)(4)(A) allows EPA to completely prohibit the discharge of any sewage from ''*a* vessel,'' whereas Section 312(f)(3) provides for the complete prohibition of discharge of any sewage from ''*all* vessels.'' If Congress had meant that all vessels must be subject to an NDZ under Section 312(f)(4)(A), it would have used the term ''all'' as it did in Section 312(f)(3). In addition, Congress' desire to authorize NDZ protection for special waters where necessary could be significantly frustrated if the Agency were to adopt the commenters' reading. After all, if EPA were to read the CWA to foreclose California's application, the State would be forced to choose between seeking a complete discharge ban that includes some vessels, which as a group do not contribute greatly to the sewage discharge problem yet might have difficulty complying, or taking no action to protect water quality from any vessel discharges. In view of the textual differences between Sections 312(f)(3) and 312(f)(4)(A), as well as the policy

considerations underlying Congress' enactment of those provisions, EPA reads Section 312(f)(4)(A) as permitting a state to seek an NDZ that is limited to specific classes of vessels.[6]

Two commenters expressed concern that this rule could lead to the patchwork application of NDZ's between states or other jurisdiction based on vessel classes. The commenters believe that an NDZ that does not ban discharges from all vessels could lead to a lack of uniformity which would make the efficient operation of commercial vessels in U.S. waters very difficult. They stated that Congress created the NDZ program to address local water quality issues that deserved additional protections but that Congress also recognized a critical need for consistency across state lines. ''Uniformity and predictability of legal requirements was precisely the goal when Congress enacted CWA Section 312(f)(1) which preempts the states from creating such inconsistent legal requirements particularly with regard to the application of Section 312(f)(4) which does not require a determination of adequate shore reception facilities.''

As the comments indicate, Section 312(f) reflects a balance between the Federal interest in uniform regulation of marine commerce and a state's interests in protection and enhancement of the quality of specified waters. EPA has previously approved ten NDZs in California, and NOAA has established prohibitions on the discharge of sewage from large vessels in waters within the boundaries of the four National Marine Sanctuaries along the California coast. Already, the discharge requirements for vessels operating along the California coast are not uniform. Today's rule will create a more uniform, well-defined boundary three miles from the California coast demarcating the NDZ for the covered classes of vessels.

One of these commenters further stated that establishing an NDZ for vessel classes sets a ''dangerous precedent'' because Section 312(f)(4)(A) does not require EPA to find that adequate pump-out facilities are reasonably available for all vessels, as is the case for state applications under Section 312(f)(3).

EPA does not expect that today's action will lead to the establishment of unjustified NDZs in the future. As noted, Section 312(f)(4)(A) does not require EPA to find that adequate pump-out facilities are available, but, unlike Section 312(f)(3), it requires EPA to determine whether a proposed NDZ is required for the protection and enhancement of the quality of specified waters. If a state is unable to demonstrate that the waters specified in a proposed NDZ warrant that protection, or that the necessary protection can be provided by an NDZ, the state will not obtain a discharge prohibition under Section 312(f)(4)(A). Under Section 312 (f)(3), only the state needs to determine whether the waters require protection, and EPA decides whether adequate pump-out facilities are reasonably available.

Some commenters also suggested that the State should have sought EPA approval under CWA Section 312(f)(3), instead of 312(f)(4)(A). Section 312(f)(3) authorizes states to, ''completely prohibit the discharge from all vessels of any sewage'' in some or all of their waters, provided that EPA determines that adequate sewage handling facilities are reasonably available to ''all vessels'' operating in the affected waters.

EPA does not decide which of these statutory provisions a state should use to apply for an NDZ. Having decided to apply under Section 312(f)(4)(A), the State of California was required to meet the criteria of this provision, and EPA is required to determine whether or not they have done so. With this final rule, we find that they have.

4. Classes of Vessels

Some commenters stated that there is no factual basis for distinguishing between large cargo vessels and smaller vessels with similar crew and passenger numbers because there would be no difference in the impacts of their sewage discharges on water quality. Some commenters also noted that the proposed rule had estimated that recreational vessels without holding tanks, as a class, have the potential to discharge more than twice the amount of sewage as covered cargo vessels.

EPA recognizes that the size of a vessel is not always determinative of the amount of sewage it will generate or its potential to pollute State waters. We expect that some vessels below the 300 gross tonnage threshold sometimes carry a similar number of crew and passengers as some of the covered large oceangoing vessels. However, as discussed above, California's application addressed vessels over 300 gross tons, and the revised data show that smaller vessels without holding tanks, as a group, are a less significant source of sewage discharges within the NDZ than large oceangoing vessels (see Table 1). EPA believes that the State's approach to defining the vessel classes by tonnage is practical and understandable. Alternatives, such as defining vessel classes by crew and passenger numbers, would be more difficult to implement and enforce.

Several commenters stated that EPA did not explain the legal basis for applying the NDZ to select classes of vessels. Some of these commenters also stated that EPA should renotice the rule for comment after explaining the legal justification for applying Section 312(f)(4)(A) to limited classes of vessels.

EPA is only required to reference the legal authority for the proposed rule. 5 U.S.C. 553(b)(2). The Notice of Proposed Rulemaking not only specified the legal basis for the proposed rule (CWA Section 312(f)(4)(A) and 40 CFR 140.4), it explained EPA's rationale for proposing, for the first time, to limit the NDZ to certain vessel classes, and specifically invited the public to comment on this approach. The commenters' detailed analyses of the issue shows that the commenters had a sufficient understanding of the legal issues to question EPA's application of Section 312(f)(4)(A) to specific classes of vessels and offer specific arguments against the proposed approach. In this final rule preamble, EPA has, in response to these comments, explained its legal rationale for today's action.

5. Large Oceangoing Vessel Sewage Holding Capacity

Some commenters suggested that the two-day holding capacity requirement for oceangoing vessels in the proposed rule was arbitrary and impractical because it had no environmental impact-based justification and would cause large oceangoing vessels to have to make extra trips beyond State waters to discharge sewage. Commenters also noted that the requirement could incentivize holding tank removal or reduction to avoid regulation, resulting in an increase in unregulated vessels and vessel discharges. One commenter suggested that there should be an exception for vessels that had installed improved treatment systems rather than large holding tanks. A couple of commenters suggested that there was a greater impact from the sewage

[6] Commenters who disagreed with this conclusion relied primarily on Congress' use of the terms ''completely'' and ''any'' in describing the scope of NDZs permitted under Section 312(f)(4)(A). See 33 U.S.C. 1322(f)(4)(A) (providing that, upon making the required finding, the Administrator shall ''*completely* prohibit the discharge from a vessel of *any* sewage (whether treated or not) into such waters'') (emphasis added). While Congress' use of the terms ''completely'' and ''any'' by itself, might be conducive to a reading that the NDZ must apply to all vessels, this language refers to ''*a* vessel.'' These terms could simply have been used by Congress to indicate that the prohibition on discharge is absolute with respect to whatever vessel or class of vessels it applies to, rather than permitting a standard which allows covered vessels to discharge sewage that meets a specified treatment standard.

discharges of vessels not covered by the two-day holding capacity requirement.

Most of the commenters who opposed the two-day holding capacity requirement recommended revising the rule to more closely reflect California's legislation, which defines the covered class of large oceangoing vessels as those with ''a holding tank of sufficient capacity'' to contain sewage while in the marine waters of the State. These commenters proposed changing the rule to require *all* vessels, to the extent they are coming from waters in which discharge is permitted, to arrive with sewage holding tanks that have been discharged to the greatest extent operationally practicable. In addition, under the commenters' suggested approach, all such vessels would be prohibited from discharging sewage within State waters to the extent that they have the capability to hold such sewage in a holding tank. These commenters stated that this approach would provide greater environmental benefit by regulating all vessels with holding tanks and result in a greater reduction in the amount of effluent discharged. In addition to written comments, representatives of the shipping industry met with EPA to discuss this approach during and after the proposed rule comment period.[7] These representatives stated that this approach would increase compliance and be easier to enforce since the Coast Guard could check the discharge logs at the same time and in the same manner as it investigated compliance with other shipping industry regulations.

Based on the information provided by the commenters and EPA's own evaluation of the sewage generation data, we agree that the proposed two-day holding tank definition may be impractical in some circumstances (e.g, causing some vessels to make additional trips from ports to discharge outside the NDZ and complicating port operations), might create an incentive for some vessel operators to remove existing holding capacity to avoid coverage by the rule, and, as discussed more fully below, would be less protective of coastal water quality than a rule that covers all large oceangoing vessels having any amount of holding capacity. As described in Section II, today's rule replaces the proposed two-day holding tank capacity definition with a vessel class definition which provides that only those large oceangoing vessels equipped with holding tanks which have fully utilized the capacity of those holding tanks while present in State waters may discharge any treated sewage. The Agency believes this approach better implements California's request in its application for an NDZ that applies to large oceangoing vessels equipped with ''a holding tank of sufficient capacity.'' Consistent with the State's application, the final rule remains limited to large vessels.

Since the Notice of Proposed Rulemaking, EPA has acquired detailed 2010 large vessel data from the Coast Guard and the Chamber of Shipping of America (CSA), available in the docket for this rule. Data from the Coast Guard include port arrival and departure dates and times, and vessel identification, characteristics, country of origin, owners and operators for all vessels calling on California ports in 2010. EPA used the Coast Guard data to better estimate port call frequency and durations for large vessels, as this information was more current and complete than the 2006 State Lands Trust Vessel Survey Data that EPA relied on for the proposed rule. The CSA vessel sewage data was compiled in response to EPA's *Clean Water Act Section 312(b): Notice Seeking Stakeholder Input on Petition and Other Request to Revise the Performance Standards for Marine Sanitation Devices,* 75 FR 39683, July 12, 2010, and includes vessel, crew, sewage generation and holding capacity information for over 600 oceangoing vessels, of which 588 were 300 gross tons or greater. EPA was able to use this data to better estimate sewage generation rates and holding capacities for large oceangoing vessels because the holding capacity information is more detailed and reliable and includes the number of days of holding capacity and daily sewage generation rates for each vessel. EPA used the new data to compare the volumes of treated vessel sewage that would be prohibited from discharge into State marine waters under the proposed rule and this final rule.

Without direct data for vessel sewage discharges in State waters, EPA used the 2006 State Lands data and 2010 Coast Guard and CSA data, to estimate the volumes of sewage generated by the different classes of vessels while present in California waters. An analysis of the Coast Guard and CSA data indicate that the median daily sewage generation rate per person for large oceangoing vessels is 16 gallons, which is almost twice as much as the estimate for large passenger vessels.[8] CSA sewage volume data ranged significantly and is attributed to crew size variation and likely to systems that process both sewage and graywater; regardless, this remains the best available data for large oceangoing vessels. The 2006 State Lands data continues to be the best source of information for large passenger vessels, therefore, EPA's estimated sewage generation rate for these vessels remains 8.4 gallons per person, per day as was used in the proposed rule. EPA used these sewage generation estimates, data on the number and length of vessel port calls, and the range of vessel sewage tank holding capacities, to compare the scope of coverage of today's rule against the scope of coverage for the proposed rule. The Coast Guard and CSA data, and EPA's analysis and analytical methods are included in the docket for this rule. EPA's analysis determined that today's rule would regulate 62 percent of large oceangoing vessels, or approximately twelve percent more than the two-day holding capacity criteria of the proposed rule, because all large oceangoing vessels with holding tank capacity, including those with less than two days, would now fall under the rule. Based on CSA data, approximately 50 percent of vessels reporting had less than two days holding capacity. This increase would prohibit approximately nine percent more treated sewage, or over 780,000 gallons, from being discharged into California marine waters, as compared to the two-day holding capacity requirement in the proposed rule.[9]

Today's rule also addresses the point raised by some commenters that the proposed two-day holding capacity rule would have excluded more large oceangoing vessels from the NDZ than it covered. As described above, today's rule will apply to approximately 62 percent of the large oceangoing vessels calling on California ports (those with holding tanks), instead of only 50 percent with two-day capacity using the originally proposed two-day holding capacity criteria. As a result today's rule will prohibit the discharge of approximately 3.3 million gallons of sewage per year, compared to the

[7] Records of meetings between EPA and shipping industry representatives can be found in the docket for this rule at *www.regulations.gov.*

[8] For the proposed rule, EPA did not have data on cargo ship sewage generation rates, so the Agency used passenger ship data from the December 29, 2008 *Cruise Ship Discharge Assessment Report* to estimate the sewage generation rate for large non-passenger oceangoing vessels at 8.4 gallons per person, per day. The Coast Guard and CSA is more reliable because it includes specific sewage generation data for large oceangoing vessels.

[9] The older data used in developing the proposed rule would also show that the final rule prohibits more sewage discharges, and is therefore more protective of water quality, but the extent of the difference would be less because EPA's original estimate of daily sewage generation was lower.

estimated 2.7 million gallons of sewage that may continue to be discharged by vessels with no holding capacity or vessels that exceed the maximum holding capacity of their tanks. (See Table 1.)

Since this approach is consistent with the State's application for an NDZ, more protective of California marine waters, more operationally feasible, and more likely to lead to better compliance, EPA has eliminated the proposed two-day holding tank capacity criteria and associated definitions, and restructured the rule to require that all large oceangoing vessels with holding tanks fully utilize their holding tank capacity while in State marine waters. EPA has presented this approach to the State, and the State agrees that the final rule is an appropriate approach to implementing ''sufficient holding tank capacity.''

Today's final rule does not adopt the commenters' specific proposed language, but it has substantially the same effect on large oceangoing vessels. Most covered vessel operators are expected to choose to enter State waters with empty holding tanks to be certain that they will fall outside the class of vessels subject to the NDZ if they fully use their holding capacity. In some instances, where a vessel with substantial holding capacity will be in State waters for a short time, this may not be necessary. However, any large oceangoing vessel which might reach its holding capacity while in State marine waters is expected to choose to empty its tanks before entering State marine waters. In addition, EPA did not incorporate the commenters' proposed language requiring holding tanks to be ''discharged to the greatest extent operationally practicable'' because this is addressed by the ''more than *de minimis* amounts of sewage'' provision in the final rule.

The rule also does not distinguish between large passenger vessels with certified MSDs and those with advanced waste treatment systems, as one commenter proposed, because Section 312(f)(4)(A) expressly prohibits distinctions between vessel discharges based on the level of treatment (the regulation must ''completely prohibit the discharge from a vessel of any sewage (whether treated or not) into such water'').

5. Applying a No Discharge Zone for All California Marine Waters

Many commenters suggested that there is an insufficient nexus between vessel sewage and the entirety of California marine waters to designate an NDZ for all of the State's coastal waters. Some commenters suggested that there is insufficient data to support an NDZ at all. Three commenters stated that a prohibition under CWA Section 312(f)(4)(A) and 40 CFR 140.4(b) requires science-based evidence that vessel sewage discharges are impacting specific waters in the proposed NDZ and that the State and EPA had not provided sufficient evidence of the impacts. One stated that the determination of the proper area to be included in an NDZ requires a quantitative and qualitative consideration of the relationship between the discharge for which the regulation is being considered and the water quality characteristics (both baseline levels and water quality standards) of the ''specified'' waters covered by the State's application. Some commenters stated that under 40 CFR 140.4(b), an NDZ could only be established where a prohibition on vessel discharges is needed to attain applicable water quality standards for the specific waters to be protected. Commenters suggested that impacts to water quality could not be measured without knowing the volume and spatial and temporal distribution of the discharges, or without ranking the contribution of the vessel discharges in relation to other sources of marine pollution. A commenter also stated that the diversity of California marine waters and the differing levels of impacts from oceangoing vessels to the waters make ''lumping'' them together into one NDZ illogical.

Pursuant to CWA Section 312(f)(4)(A), EPA evaluated the waters that the State specified for NDZ coverage. At the outset, it is important to note that the statutory standard for when EPA must impose an NDZ under CWA 312(f)(4)(A) is where the Administrator determines ''that *the protection and enhancement of the quality of specified waters* within such state requires such a prohibition.'' Contrary to what was suggested by commenters, nothing in the statute requires a demonstration focused on specific state water quality standards.[10]

Based on the information contained in the record for today's rule, EPA finds that the NDZ requested in the State's application is required for all of California's marine waters. This information demonstrates that significant portions of California marine waters are biologically important and sensitive, that large vessel sewage discharges are a significant source of marine pollution which is distributed widely throughout State waters, and that these discharges contribute to the degradation of the State waters. From the Mexican border to the Oregon border, California marine waters include 889 recreational areas, 200 aquatic sanctuaries, over 100 state marine protected areas, including 34 locations designated as State Water Quality Protection Areas for unique biological values and or fragility, four National Marine Sanctuaries, other national and state parks, commercial and recreational fisheries, shellfish growing areas and essential fish habitat. These waters support important economic, recreational, conservation, research, educational, and aesthetic values, and are becoming increasingly important for potable water supply as desalinization measures are being proposed and used to meet drinking water demands. California has also listed 120 miles of its coastal waters as impaired for pathogens commonly associated with sewage.[11]

Specially designated areas found throughout California's coastal waters are part of a larger connected oceanographic unit that is essential habitat for a wide range of important marine species. The entire length of California's coastal waters is influenced by the California Current system, an eastern boundary current that forms the eastern portion of the North Pacific subtropical gyre. While this broad current moves southward off the continental shelf, seasonal coastal upwelling (driven primarily by coastal winds), as well as countercurrents and eddies (smaller scale cyclonic flows), contribute to mixing of continental shelf water with offshore ocean waters. The population dynamics, genetic structure, and biogeography of many coastal marine species are highly influenced by and dependent on this oceanographic connectivity. These waters provide important migration routes, feeding grounds, and breeding sites for many marine mammal species, including blue whales, gray whales, dolphins, porpoises, California sea lions, fur seals, and Northern elephant seals, as well as migratory and resident sea bird species, including petrels, cormorants, albatross, terns, shearwaters, pelicans, and auklets.

Because most of California's coastal waters are recognized as possessing

[10] EPA recognizes that its CWA section 312(f)(4)(A) regulations include a reference to state water quality standards, in the context of addressing a decision by the Administrator to expand or reduce the scope of a State's requested NDZ, but that is not an issue in this designation. In any event, this reference predates amendments to CWA 312(f)(4)(A) which eliminated any need for EPA to determine whether an NDZ was necessary to protect applicable water quality standards, to the language in the statute today.

[11] These pathogens originate from both land-based and water-based sources.

special significance, the degree of connectivity and mixing throughout these coastal waters requires that the NDZ extend to all of California's marine waters. As some commenters noted, discharged sewage moves easily through coastal waters and can impair water quality in protected areas even if it is released outside those areas. By establishing the NDZ for all of California marine waters, instead of select areas of special concern, today's rule will provide the required protection of water quality. In addition, it will be easier for vessel operators to understand the scope of the designation and be able to comply with the rule.

In light of the extensive array of important marine resources located throughout California's coastal waters, their connection to the California Current system, and the presence of the two covered classes of large vessels in many parts of these waters having the potential to discharge 22.5 million gallons of sewage per year, EPA does not believe that Section 312(f)(4)(A) requires it to divide the proposed NDZ into individual segments and conduct site-specific evaluations of these segments to determine the extent to which vessel sewage discharges are impacting each. None of the commenters identified specific segments of the NDZ that they proposed to exclude from designation.[12] The information provided in the State's application, the proposed rule and supporting comments demonstrate that an NDZ encompassing all California marine waters is required to protect and enhance the quality of California marine waters which warrant special protection under CWA Section 312(f)(4)(A) because of their unique qualities and diverse resources.

7. Other General Comments

One commenter, while in support of the vessel sewage prohibition, expressed concerns with the legal basis for regulating military vessels under the rule stating that Section 553(a)(1) of the Administrative Procedure Act prohibits an agency from regulating military matters. Section 553(a)(1) exempts rulemakings involving military functions from having to comply with the Administrative Procedure Act's notice and comment procedures, but does not exempt military functions from all Federal regulations. Pursuant to Section 312(d) of the CWA, certain military vessels are covered by today's rulemaking according to the second applicability provision, i.e., any military vessel that is a ''large oceangoing vessel equipped with a holding tank which has not fully used the holding tank's capacity, or which contains more than *de minimis* amounts of sewage generated while the vessel was outside of the marine waters of the State of California.'' Under CWA section 312(d), however, the Secretary of Defense has exercised the authority to exempt specific vessels or classes of vessels from compliance in the interest of national security. The Secretary of Defense promulgated Department of Defense (DoD) 4715.06–R1 ''Regulations on Vessels Owned or Operated by the Department of Defense'' (January 2005), at p.8, sections C.1.3.1.1 through C.1.3.1.4, which explain the circumstances under which DoD has exempted its vessels from the sewage discharge requirements of Section 312, including for example, circumstances in which compliance would excessively and unreasonably detract from the vessel's military characteristics, effectiveness, or safety, and not be in the interest of national security. This DoD regulation states that commanding officers and/or vessel masters of exempted vessels are nonetheless required to limit sewage discharges into U.S. navigable waters, territorial seas, and NDZs to the maximum extent practicable without endangering the health, safety, or welfare of the crew or other personnel aboard.

The commenter also stated that the economic analysis for the rule required under the Regulatory Flexibility Act was incomplete because it did not consider ''potentially devastating'' impacts to small shore-side businesses in the event regulated large passenger vessels spent fewer days at ports while transiting beyond the NDZ to discharge. The Regulatory Flexibility Act only requires agencies to consider economic impacts on small entities to which the rule will apply. *See, e.g., Cement Kiln Recycling Coalition* v. *EPA,* 255 F.3d 855 (DC Cir. 2001), 5 U.S.C. 603(b)(3). This rule will not apply to ''small shore-side businesses'' and thus EPA was not required to consider the potential indirect impacts of the rule on those businesses. Nevertheless, EPA does not anticipate the rule will result in cruise ships spending fewer days at California ports than they would otherwise. The comment letter from Cruise Lines International Association, which represents 26 cruise lines, stated that their members have implemented the California legislative restrictions that formed the basis for the rule since the State legislation was enacted.

Another commenter suggested that Federal regulation of sewage discharges from vessels preempts state regulation. Section 312(f)(1)(A) of the CWA specifies no state or political subdivision thereof shall adopt or enforce any statute or regulation of such state or political subdivision with respect to the design, manufacture, or installation or use of any marine sanitation device on any vessel subject to the provisions of this section; however, the other subsections of 312(f) specifically authorize states to apply to EPA for establishment of NDZs.

IV. Administrative Requirements

Plain Language

In compliance with the principles in the President's Memorandum of June 1, 1998 (63 FR 31885), regarding plain language, this preamble and the Final Rule are written using plain language.

A. Executive Order 12866: Regulatory Planning and Review and Executive Order 13563: Improving Regulation and Regulatory Review

Under Executive Order 12866 (58 FR 51735, Oct. 4, 1993), this action is a ''significant regulatory action.'' Accordingly, EPA submitted this action to the Office of Management and Budget (OMB) for review under EO 12866 and 13563 (76 FR 3821, Jan. 21, 2011) and any changes made in response to OMB recommendations have been documented in the docket for this action (docket number EPA–R09–OW–2010–0438).

EPA prepared an analysis of the potential costs associated with this action to determine whether the final rule would have an annual effect on the economy of $100 million or more, or adversely affect in a material way the economy or a sector of the economy. Vessels that are equipped with MSDs and that navigate throughout California waters are already subject to the EPA MSD Standard at 40 CFR part 140 and the Coast Guard MSD Regulations at 33 CFR part 159. These standards prohibit the overboard discharge of untreated vessel sewage in state waters and require that vessels with installed toilets be equipped with Coast Guard certified MSDs which either retain sewage or treat sewage to the applicable standards. See, 40 CFR 140.3; 33 CFR 159.7. There are three types of MSDs, but only Type II and Type III MSDs are used by the vessels affected by this rule.

Vessels subject to this final rule include all large passenger vessels of 300 gross tons or more and oceangoing

[12] As noted previously, these commenters stated that EPA should deny the State's request for establishment of an NDZ for *all* California marine waters.

vessels of 300 gross tons or more equipped with sewage holding tanks. The proposed rule relied on 2008 data for large passenger vessel calls to estimate that up to 40 percent of the large passenger vessels may need to retrofit their holding tanks, at an estimated cost of $200,000 per vessel, to ensure they had adequate holding capacity while operating in State waters. The total estimated one-time capital cost for the existing fleet of large passenger vessels calling on California ports was estimated to be $3.8 million. To estimate operation and maintenance costs, EPA assumed that most of the cost would be labor to operate and occasionally inspect new or retrofitted tanks. Conservatively assuming each ship would budget one hour per week for tank operation and maintenance at approximately $50 per hour, we estimated approximately $2,600 per year, per ship, or approximately $50,000 per year for operation and maintenance costs.

Approximately 62 percent of the large oceangoing vessels have sewage holding tanks and, therefore, are subject to this final rule. For the proposed rule, EPA evaluated the potential costs of voluntarily retrofitting holding tanks on some vessels to increase capacity or, alternatively, making extra trips beyond State marine waters to discharge sewage. However, the final rule does not require owners to retrofit any large oceangoing vessels or make extra trips to discharge outside of the NDZ to discharge sewage, and therefore we do not anticipate that it will impose additional costs on these vessel operators.

B. Paperwork Reduction Act

This action does not impose an information collection burden under the provisions of the *Paperwork Reduction Act,* 44 U.S.C. 3501 *et seq.* Burden is defined at 5 CFR 1320.3(b). Since today's rule would not establish or modify any information and recordkeeping requirements, it is not subject to the requirements of the Paperwork Reduction Act.

C. Regulatory Flexibility Act

The Regulatory Flexibility Act (RFA) generally requires an agency to prepare a regulatory flexibility analysis of any rule subject to notice and comment rulemaking requirements under the Administrative Procedure Act or any other statute unless the agency certifies that the rule will not have a significant economic impact on a substantial number of small entities. Small entities include small businesses, small organizations, and small governmental jurisdictions.

For purposes of assessing the impacts of today's rule on small entities, small entity is defined as: (1) A small business as defined by the Small Business Administration's (SBA) regulations at 13 CFR 121.201; (2) a small governmental jurisdiction that is a government of a city, county, town, school district or special district with a population of less than 50,000; and (3) a small organization that is any not-for-profit enterprise which is independently owned and operated and is not dominant in its field.

After considering the economic impacts of the final rule on small entities, EPA certifies that this action will not have a significant economic impact on a substantial number of small entities. The small entities subject to the requirements of this final rule fall under Deep Sea Freight Transportation (NAICS Code 483111) and Deep Sea Passenger Transportation (NAICS 483112) classifications.[13] The U.S. Small Business Administration size standard for these businesses is 500 or fewer employees. To determine the size of companies that own large passenger and large oceangoing vessels that call at California ports, the EPA reviewed owner profiles for all large passenger vessels and several oceangoing vessels that responded to the State's 2006 vessel survey. Based on this review, it was determined that no large passenger and oceangoing vessels that call at California ports are owned by companies that employ 500 or fewer people.

D. Unfunded Mandates Reform Act

This final rule does not contain a Federal mandate that may result in expenditures of $100 million or more for state, local, and tribal governments, in the aggregate, or the private sector in any one year, as demonstrated above in section A, Executive Order 12866: Regulatory Planning and Review.

Because the final rule contains no regulatory requirements that might significantly or uniquely affect small governments, it is also not subject to the requirements of Section 203 of the Act. Small governments are subject to the same requirements as other entities whose duties result from this final rule and they have the same ability as other entities to retain and pump out treated sewage or discharge outside of the designated zones.

[13] U.S. Small Business Administration Table of Small Business Size Standards, North American Industry Classification System (NAICS), *www.sba.gov/size.*

E. Executive Order 13132: Federalism

This action does not have Federalism implications. It will not have substantial direct effects on the states, on the relationship between the national government and the states, or on the distribution of power and responsibilities among the various levels of government, as specified in Executive Order 13132. Section 312(f) of the CWA generally preempts state regulation of sewage discharges in state waters. An NDZ allows the state to seek protection of its state waters that it would otherwise be preempted from providing on its own. The State of California is requesting that EPA take action to designate all State marine waters as an NDZ under CWA Section 312(f)(4)(A), and EPA's action in this final rule is responsive to this request. Therefore, Executive Order 13132 does not apply to this action.

F. Executive Order 13175: Consultation and Coordination With Indian Tribal Governments

This action does not have any known tribal implications, as specified in Executive Order 13175 (65 FR 67249, Nov. 9, 2000). The only expected impact on tribal rights or responsibilities is the improvement of ocean water quality. EPA has notified all California tribes with coastal reservations of this action and received no comments.

G. Executive Order 13045: Protection of Children From Environmental Health Risks & Safety Risks

The order applies to economically significant rules under E.O. 12866 that concern an environmental health or safety risk that EPA has reason to believe may disproportionately affect children. This action is not subject to EO 13045 (62 FR 19885, Apr. 23, 1997) because it is not economically significant as defined in EO 12866.

H. Executive Order 13211: Actions That Significantly Affect Energy Supply, Distribution, or Use

This action is not a ''significant energy action'' as defined in Executive Order 13211 (66 FR 28355, May 22, 2001), because it is not likely to have a significant adverse effect on the supply, distribution, or use of energy.

I. National Technology Transfer and Advancement Act

Section 12(d) of the National Technology Transfer and Advancement Act of 1995 (NTTAA), Public Law 104–113, 12(d) (15 U.S.C. 272 note) directs EPA to use voluntary consensus standards in its regulatory activities unless to do so would be inconsistent

with applicable law or otherwise impractical. Voluntary consensus standards are technical standards (e.g., materials specifications, test methods, sampling procedures, and business practices) that are developed or adopted by voluntary consensus standards bodies. NTTAA directs EPA to provide Congress, through OMB, explanations when the Agency decides not to use available and applicable voluntary consensus standards.

This final rule does not involve technical standards. Therefore, EPA did not consider the use of any voluntary consensus standards.

J. Executive Order 12898: Federal Actions To Address Environmental Justice in Minority Populations and Low-Income Populations

Executive Order 12898 (59 FR 7629 (Feb. 16, 1994)) establishes Federal executive policy on environmental justice. Its main provision directs Federal agencies, to the greatest extent practicable and permitted by law, to make environmental justice part of their mission by identifying and addressing, as appropriate, disproportionately high and adverse human health or environmental effects of their programs, policies, and activities on minority populations and low-income populations in the United States.

EPA has determined that this final rule will not have disproportionately high and adverse human health or environmental effects on minority or low-income populations because it increases the level of environmental protection for all affected populations without having any disproportionately high and adverse human health or environmental effects on any population, including any minority or low-income population. The final rule will further regulate and reduce pollutants from sewage in California marine waters thus reducing the risk of exposure to all populations, including those covered under this Executive order.

K. Congressional Review Act

The Congressional Review Act, 5 U.S.C. 801 *et seq.,* as added by the Small Business Regulatory Enforcement Fairness Act of 1996, generally provides that before a rule may take effect, the agency promulgating the rule must submit a rule report, which includes a copy of the rule, to each House of the Congress and to the Comptroller General of the United States. EPA will submit a report containing this rule and other required information to the U.S. Senate, the U.S. House of Representatives, and the Comptroller General of the United States prior to publication of the rule in the **Federal Register**. A Major rule cannot take effect until 60 days after it is published in the **Federal Register**. This action is not a ''major rule'' as defined by 5 U.S.C. 804(2). This rule will be effective March 28, 2012.

Lists of Subjects in 40 CFR Part 140

Environmental protection, Sewage disposal, Vessels.

Dated: February 9, 2012.

Jared Blumenfeld,

Regional Administrator, Region IX.

For the reasons stated in the preamble, EPA amends 40 CFR part 140 as follows:

PART 140—[AMENDED]

■ 1. The authority citation for part 140 continues to read as follows:

Authority: 33 U.S.C. 1322.

■ 2. Section 140.4 is amended by adding paragraph (b)(2) to read as follows:

§ 140.4 Complete prohibition.

* * * * *

(b) * * *

(2)(i) For the marine waters of the State of California, the following vessels are completely prohibited from discharging any sewage (whether treated or not):

(A) A large passenger vessel;

(B) A large oceangoing vessel equipped with a holding tank which has not fully used the holding tank's capacity, or which contains more than *de minimis* amounts of sewage generated while the vessel was outside of the marine waters of the State of California.

(ii) For purposes of paragraph (b)(2) of this section:

(A) ''Marine waters of the State of California'' means the territorial sea measured from the baseline as determined in accordance with the Convention on the Territorial Sea and the Contiguous Zone and extending seaward a distance of three miles, and all enclosed bays and estuaries subject to tidal influences from the Oregon border (41.999325 North Latitude, 124.212110 West Longitude, decimal degrees, NAD 1983) to the Mexican border (32.471231 North Latitude, 117.137814 West Longitude, decimal degrees, NAD 1983). A map illustrating these waters can be obtained from EPA or viewed at *http://www.epa.gov/region9/water/no-discharge/overview.html.*

(B) A ''large passenger vessel'' means a passenger vessel, as defined in section 2101(22) of title 46, United States Code, of 300 gross tons or more, as measured under the International Convention on Tonnage Measurement of Ships, 1969, measurement system in 46 U.S.C. 14302, or the regulatory measurement system of 46 U.S.C. 14502 for vessels not measured under 46 U.S.C. 14302, that has berths or overnight accommodations for passengers.

(C) A ''large oceangoing vessel'' means a private, commercial, government, or military vessel of 300 gross tons or more, as measured under the International Convention on Tonnage Measurement of Ships, 1969, measurement system in 46 U.S.C. 14302, or the regulatory measurement system of 46 U.S.C. 14502 for vessels not measured under 46 U.S.C.14302, that is not a large passenger vessel.

(D) A ''holding tank'' means a tank specifically designed, constructed, and fitted for the retention of treated or untreated sewage, that has been designated and approved by the ship's flag Administration on the ship's stability plan; a designated ballast tank is not a holding tank for this purpose.

* * * * *

[FR Doc. 2012–4469 Filed 2–24–12; 8:45 am]

BILLING CODE 6560–50–P

DEPARTMENT OF COMMERCE

National Oceanic and Atmospheric Administration

50 CFR Part 622

[Docket No. 001005281–0369–02]

RIN 0648–XB031

Fisheries of the Caribbean, Gulf of Mexico, and South Atlantic; Coastal Migratory Pelagic Resources of the Gulf of Mexico and South Atlantic; Closure

AGENCY: National Marine Fisheries Service (NMFS), National Oceanic and Atmospheric Administration (NOAA), Commerce.

ACTION: Temporary rule; closure.

SUMMARY: NMFS closes the hook-and-line component of the commercial sector of the coastal migratory pelagic fishery for king mackerel in the southern Florida west coast subzone. This closure is necessary to protect the Gulf king mackerel resource.

DATES: This rule is effective 12:01 a.m., local time, February 26, 2012, through June 30, 2012.

FOR FURTHER INFORMATION CONTACT: Susan Gerhart, telephone 727–824–5305, email *susan.gerhart@noaa.gov.*

SUPPLEMENTARY INFORMATION: The fishery for coastal migratory pelagic fish

(king mackerel, Spanish mackerel, and cobia) is managed under the Fishery Management Plan for the Coastal Migratory Pelagic Resources of the Gulf of Mexico and South Atlantic (FMP). The FMP was prepared by the Gulf of Mexico and South Atlantic Fishery Management Councils (Councils) and is implemented under the authority of the Magnuson-Stevens Fishery Conservation and Management Act (Magnuson-Stevens Act) by regulations at 50 CFR part 622.

On April 27, 2000, NMFS implemented the final rule (65 FR 16336, March 28, 2000) that divided the Florida west coast subzone of the eastern zone into northern and southern subzones, and established their separate quotas. The quota for the hook-and-line component in the southern Florida west coast subzone is 520,312 lb (236,010 kg).

Under 50 CFR 622.43(a), NMFS is required to close any segment of the king mackerel commercial sector when its quota has been reached, or is projected to be reached, by filing a notification at the Office of the Federal Register. NMFS has determined the commercial quota for Gulf group king mackerel in the southern Florida west coast subzone will be reached by February 26, 2012. Accordingly, the commercial sector for Gulf group king mackerel in the southern subzone is closed effective 12:01 a.m., local time, February 26, 2012, through June 30, 2012, the end of the fishing year.

From November 1 through March 31, the southern subzone is that part of the Florida west coast subzone off Collier and Monroe Counties, Florida. This is the area south and west from 25°20.4′ N. lat. (a line directly east from the Miami-Dade/Monroe County boundary on the east coast of Florida) to 26°19.8′ N. lat. (a line directly west from the Lee/Collier County boundary on the west coast of Florida). Beginning April 1, the southern subzone is reduced to the area off Collier County, Florida, between 25°48′ N. lat. and 26°19.8′ N. lat.

During the closure period, no person aboard a vessel for which a commercial permit for king mackerel has been issued may fish for or retain Gulf group king mackerel in Federal waters of the closed subzone. There is one exception, however, for a person aboard a charter vessel or headboat. A person aboard a vessel that has a valid charter/headboat permit and also has a commercial king mackerel permit for coastal migratory pelagic fish may continue to retain king mackerel in or from the closed subzone under the 2-fish daily bag limit, provided the vessel is operating as a charter vessel or headboat. Charter vessels or headboats that hold a commercial king mackerel permit are considered to be operating as a charter vessel or headboat when they carry a passenger who pays a fee or when more than three persons are aboard, including operator and crew.

Classification

This action responds to the best available information recently obtained from the fishery. The Assistant Administrator for Fisheries, NOAA, (AA), finds that the need to immediately implement this action to close this component of the fishery constitutes good cause to waive the requirements to provide prior notice and opportunity for public comment pursuant to the authority set forth in 5 U.S.C. 553(b)(B), as such procedures would be unnecessary and contrary to the public interest. Such procedures would be unnecessary because the rule itself already has been subject to notice and comment, and all that remains is to notify the public of the closure.

Allowing prior notice and opportunity for public comment is contrary to the public interest because of the need to immediately implement this action to protect the fishery since the capacity of the fishing fleet allows for rapid harvest of the quota. Prior notice and opportunity for public comment would require time and would potentially result in a harvest well in excess of the established quota.

For the aforementioned reasons, the AA also finds good cause to waive the 30-day delay in effectiveness of the action under 5 U.S.C. 553(d)(3).

This action is taken under 50 CFR 622.43(a) and is exempt from review under Executive Order 12866.

Authority: 16 U.S.C. 1801 *et seq.*

Dated: February 22, 2012.

James P. Burgess,

Acting Director, Office of Sustainable Fisheries, National Marine Fisheries Service.

[FR Doc. 2012–4500 Filed 2–22–12; 4:15 pm]

BILLING CODE 3510–22–P

DEPARTMENT OF COMMERCE

National Oceanic and Atmospheric Administration

50 CFR Part 679

[Docket No. 101126522–0640–2]

RIN 0648–XB035

Fisheries of the Exclusive Economic Zone Off Alaska; Pacific Cod by Catcher Vessels Using Trawl Gear in the Western Regulatory Area of the Gulf of Alaska

AGENCY: National Marine Fisheries Service (NMFS), National Oceanic and Atmospheric Administration (NOAA), Commerce.

ACTION: Temporary rule; closure.

SUMMARY: NMFS is prohibiting directed fishing for Pacific cod by catcher vessels (CVs) using trawl gear in the Western Regulatory Area of the Gulf of Alaska (GOA). This action is necessary to prevent exceeding the A season allowance of the 2012 Pacific cod total allowable catch apportioned to CVs using trawl gear in the Western Regulatory Area of the GOA.

DATES: Effective 1200 hrs, Alaska local time (A.l.t.), February 22, 2012, through 1200 hrs, A.l.t., September 1, 2012.

FOR FURTHER INFORMATION CONTACT: Josh Keaton, 907–586–7228.

SUPPLEMENTARY INFORMATION: NMFS manages the groundfish fishery in the GOA exclusive economic zone according to the Fishery Management Plan for Groundfish of the Gulf of Alaska (FMP) prepared by the North Pacific Fishery Management Council under authority of the Magnuson-Stevens Fishery Conservation and Management Act. Regulations governing fishing by U.S. vessels in accordance with the FMP appear at subpart H of 50 CFR part 600 and 50 CFR part 679. Regulations governing sideboard protections for GOA groundfish fisheries appear at subpart B of 50 CFR part 680.

The A season allowance of the 2012 Pacific cod total allowable catch (TAC) apportioned to CVs using trawl gear in the Western Regulatory Area of the GOA is 5,736 metric tons (mt), as established by the final 2011 and 2012 harvest specifications for groundfish of the GOA (76 FR 11111, March 1, 2011), revision to the final 2012 harvest specifications for Pacific cod (76 FR 81860, December 29, 2011), and inseason adjustment to the final 2012 harvest specifications for Pacific cod (77 FR 438, January 5, 2012).

In accordance with § 679.20(d)(1)(i), the Administrator, Alaska Region,

NMFS (Regional Administrator) has determined that the A season allowance of the 2012 Pacific cod TAC apportioned to CVs using trawl gear in the Western Regulatory Area of the GOA will soon be reached. Therefore, the Regional Administrator is establishing a directed fishing allowance of 5,436 mt, and is setting aside the remaining 300 mt as bycatch to support other anticipated groundfish fisheries. In accordance with § 679.20(d)(1)(iii), the Regional Administrator finds that this directed fishing allowance has been reached. Consequently, NMFS is prohibiting directed fishing for Pacific cod by CVs using trawl gear in the Western Regulatory Area of the GOA. After the effective date of this closure the maximum retainable amounts at § 679.20(e) and (f) apply at any time during a trip.

Classification

This action responds to the best available information recently obtained from the fishery. The Assistant Administrator for Fisheries, NOAA (AA), finds good cause to waive the requirement to provide prior notice and opportunity for public comment pursuant to the authority set forth at 5 U.S.C. 553(b)(B) as such requirement is impracticable and contrary to the public interest. This requirement is impracticable and contrary to the public interest as it would prevent NMFS from responding to the most recent fisheries data in a timely fashion and would delay the directed fishing closure of Pacific cod for CVs using trawl gear in the Western Regulatory Area of the GOA. NMFS was unable to publish a notice providing time for public comment because the most recent, relevant data only became available as of February 21, 2012.

The AA also finds good cause to waive the 30-day delay in the effective date of this action under 5 U.S.C. 553(d)(3). This finding is based upon the reasons provided above for waiver of prior notice and opportunity for public comment.

This action is required by § 679.20 and is exempt from review under Executive Order 12866.

Authority: 16 U.S.C. 1801 *et seq.*

Dated: February 22, 2012.

James P. Burgess,

Acting Director, Office of Sustainable Fisheries, National Marine Fisheries Service.

[FR Doc. 2012–4501 Filed 2–22–12; 4:15 pm]

BILLING CODE 3510–22–P

Proposed Rules

Federal Register
Vol. 77, No. 38
Monday, February 27, 2012

This section of the FEDERAL REGISTER contains notices to the public of the proposed issuance of rules and regulations. The purpose of these notices is to give interested persons an opportunity to participate in the rule making prior to the adoption of the final rules.

NATIONAL ARCHIVES AND RECORDS ADMINISTRATION

Office of the Federal Register

1 CFR Part 51

[NARA 12–0002]

Incorporation by Reference

AGENCY: Office of the Federal Register, National Archives and Records Administration.

ACTION: Announcement of a petition for rulemaking and request for comments.

SUMMARY: On February 13, 2012, the Office of the Federal Register (OFR or we) received a petition to amend our regulations governing the approval of agency requests to incorporate material by reference into the Code of Federal Regulations. We've set out the petition in this document. We would like comments on the broad issues raised by this petition.

DATES: Comments must be received on or before March 28, 2012.

ADDRESSES: You may submit comments, identified using the subject line of this document, by any of the following methods:

- *Federal eRulemaking Portal: http://www.regulations.gov.* Follow the instructions for submitting comments.
- *Email: Fedreg.legal@nara.gov.* Include the subject line of this document in the subject line of the message.
- *Mail:* the Office of the Federal Register (NF), The National Archives and Records Administration, 8601 Adelphi Road, College Park, MD.
- *Hand Delivery/Courier:* Office of the Federal Register, 800 North Capitol Street NW., Suite 700, Washington, DC 20001.

Docket materials are available at the Office of the Federal Register, 800 North Capitol Street NW., Suite 700, Washington, DC 20001, 202–741–6030. Please contact the persons listed in the **FOR FURTHER INFORMATION CONTACT** section to schedule your inspection of docket materials. The Office of the Federal Register's official hours of business are Monday through Friday, 8:45 a.m. to 5:15 p.m., excluding Federal holidays.

FOR FURTHER INFORMATION CONTACT: Amy Bunk, Director of Legal Affairs and Policy, or Miriam Vincent, Staff Attorney, Office of the Federal Register, at *Fedreg.legal@nara.gov,* or 202–741–6030.

SUPPLEMENTARY INFORMATION: We received a petition to revise our regulations at 1 CFR part 51 on February 13, 2012. The petition is set out below. It specifically requests that we amend our regulations to define ''reasonably available'' and to include several requirements related to the statutory obligation that material incorporated by reference (IBR) be reasonably available. The petition does not specifically request that we define ''class of persons affected''; however, it assumes that this term encompasses anyone who is interested in reviewing the material agencies want to IBR into their regulations. The petitioners did include specific regulatory changes, as an example of what our regulations could look like. They are not asking for adoption of this exact language, however, so we are not including that text here.

We are requesting comments on the following issues:

1. Does ''reasonably available''

a. Mean that the material should be available:

i. For free and

ii. To anyone online?

b. Create a digital divide by excluding people without Internet access?

2. Does ''class of persons affected'' need to be defined? If so, how should it be defined?

3. Should agencies bear the cost of making the material available for free online?

4. How would this impact agencies budget and infrastructure, for example?

5. How would OFR review of proposed rules for IBR impact agency rulemaking and policy, given the additional time and possibility of denial of an IBR approval request at the final rule stage of the rulemaking?

6. Should OFR have the authority to deny IBR approval requests if the material is not available online for free?

7. The Administrative Conference of the United States recently issued a Recommendation on IBR. 77 FR 2257 (January 17, 2012). In light of this recommendation, should we update our guidance on this topic instead of amending our regulations?

8. Given that the petition raises policy rather than procedural issues, would the Office of Management and Budget be better placed to determine reasonable availability?

9. How would an extended IBR review period at both the proposed rule and final rule stages impact agencies?

Dated: February 21, 2012.

Michael L. White,

Acting Director, Office of the Federal Register.

Peter L. Strauss
Betts Professor of Law
435 West 116th Street
New York, N.Y. 10027
February 10, 2012

Office of the Federal Register (NF)
The National Archives and Records Administration
8601 Adelphi Road College Park, MD 20740–6001

Gentlefolk,

Pursuant to 5 U.S.C. 553(e), we hereby petition for amendment of 1 CFR part 51, ''Incorporation by Reference'' to reflect the changed circumstances brought about by the information age. While it is only necessary to be an interested person to file such a petition, the undersigned include scholars of administrative law with particular, continuing interests in the avoidance of secret law and the development of the government's law-related Internet activities, the President of Public Resource.Org (an NGO dedicated to the creation of a free web-based database of privately developed standards treated as mandatory by governmental authorities), and practitioners of administrative law.

1 CFR part 51 is your implementation of your responsibilities under 5 U.S.C. 552(a)(1), which provides in relevant part

(1) Each agency shall separately state and currently publish in the **Federal Register** for the guidance of the public—

(D) substantive rules of general applicability adopted as authorized by law, and statements of general policy or interpretations of general applicability formulated and adopted by the agency; and

(E) each amendment, revision, or repeal of the foregoing.

Except to the extent that a person has actual and timely notice of the terms thereof, a person may not in any manner be required to resort to, or be adversely affected by, a matter required to be published in the **Federal Register** and not so published. For the purpose of this paragraph, matter reasonably available to the class of persons affected thereby is deemed published in the

Federal Register when incorporated by reference therein with the approval of the Director of the Federal Register.

As the statute states, and 1 CFR 51.3 recognizes, each incorporation by reference must be actively and individually approved by the Director of the Federal Register, after stated requirements have been met. As 1 CFR 51.1(b) recognizes, it is for the Director to ''interpret and apply the language of action 552(a)''; the whole of the regulation is, in effect, an interpretation of what it means for matter incorporated by reference to be ''reasonably available.'' However, this regulation has not been amended in any respect since its appearance Aug. 6, 1982 at 47 FR 34108. Subsequent statutory and social developments have transformed what it might mean for matter to be ''reasonably available,'' and this petition seeks the redefinition of ''reasonably available'' in the light of those changes. In the pre-digital world, it may have seemed reasonable to require persons wishing to know the law governing their activities to pay private standard-setting organizations for access to standards made mandatory by government regulations incorporating those standards by reference. These standards were sometimes voluminous, could be presented only in print, and could be made available to concerned parties only at some expense to the provider. Developments in both law and technology over the last two decades have undermined that rationale, however, transforming what it should mean for these standards to be ''reasonably available.''

In particular, when section 552(a)(1) was enacted and at the time 1 CFR part 51 was adopted, substantive rules of general applicability, statements of general policy or interpretations of general applicability, as well, could be made available to the public only in printed form. Since the ''published data, criteria, standards, specifications, techniques, illustrations, or similar material'' made eligible for incorporation by reference in § 51.7(a)(2) were often voluminous in character, permitting their incorporation by reference would ''[s]ubstantially reduce[] the volume of material published in the **Federal Register**.'' § 51.7(a)(3). That effect was the primary impetus for permitting incorporation by reference. Again, this effect has been eliminated by the implementation of agency electronic reading rooms, under which unlimited volumes of materials may be stored or hyperlinked, and made readily searchable by common web-based tools.

Section 51.7(a)(4) of your regulations, defining eligibility for incorporation, today makes no effort to define ''reasonable availability.'' Although it conditions eligibility on whether the material to be incorporated ''[i]s reasonably available to and usable by the class of persons affected by the publication,'' it goes on to define *only* ''usability,'' and it does that for the pre-Internet age, in terms that plainly envision only *print* publication. Another element of your regulation, § 51.1(c)(1), provides that the terms of reference for the Director's determinations are whether incorporation ''is intended to benefit both the Federal Government and the members of the class affected.'' Although we understand that respect for standards organizations' copyrights may influence the Director's determination that incorporated material is ''reasonably available,'' this language invokes that interest only indirectly. In the Internet age, that interest needs to be directly considered, in relation to the need of the regulated and citizens alike to know standards that may be proposed, or are later adopted, to governing their conduct. The possibility of protecting copyright owners' financial interests in most uses of their standards by technical means (such as limited electronic access) is an appropriate element here, as is creating standards for ''reasonable availability'' that will maximize agency incentives to bargain hard over such licensing payments as might be appropriate.

With the Electronic Freedom of Information Act of 1996, the Government Paperwork Elimination Act of 2000, and the E-Government Act of 2002, public availability of government records has moved decisively from print media to electronic reading rooms. Indeed, the **Federal Register** no longer needs to be printed, especially given **Federal Register** 2.0, and in any event reducing the volume of material in print in it is no longer an important consideration. While the CFR will doubtless remain *in print,* nonetheless the availability of materials incorporated by reference on government (or private) Web sites renders any concern about its volume also irrelevant to deciding whether material is ''reasonably available.'' Any agency publishing material to its electronic Web site, whether or not it is in print, will have made that material ''reasonably available.'' Indeed the obligations of E–FOIA for guidance material under 5 U.S.C. 552(a)(2) make this clear. Absent actual notice, agencies may not cite guidance materials adversely to private parties unless they have been posted in the agency's electronic library—and there is no ''reasonably available'' qualification to this obligation, only the possibility of redaction for privacy protection.

These enactments and their impact are nowhere referenced or considered in part 51—as they could not have been when it was last considered, in 1982. They make plain the necessity that the Director reconsider the now antiquated regulations implementing 5 U.S.C. 552(a)(1) and its criterion of reasonable availability, and in doing so assure Americans of ready access to the law that controls their conduct.

A recent action by the Administrative Conference of the United States failed directly to address the Director's responsibility for shaping and administering the criterion of reasonable availability. However, the recommendation and its supporting report strongly suggest factors that should enter in:

(1) Section 51 currently applies only to the publication of a final rule. However, notices of proposed rulemaking will often propose incorporation by reference, and public availability of materials is of special importance during the rulemaking stage to effectuate the APA's commitment (strongly reinforced by caselaw requiring agencies to reveal important data on which they may rely) to a meaningful public comment opportunity. The ready availability of materials proposed to be incorporated by reference, whether in FDMS, on an agency Web site, or on the Web site of a copyright holder (who may appropriately limit access to the comment period, and provide it only in read-only form), is essential to any ultimate determination that material that would otherwise be required to be placed in the body of a final rule is ''reasonably available'' to the concerned public and hence may be incorporated by reference. Here, particularly, the interests of a wide range of interests—citizens, local governments, small businesses—may be implicated. Agencies seeking approval for incorporations by reference of voluntary consensus standards that are referred to in their notices of proposed rulemaking should be required to demonstrate the steps that they have taken to enable comment on those standards, as one element of reasonable availability.

(2) The National Technology Transfer Act of 1995 and the implementing OMB Circular A–119 properly distinguish, as the literature does, between regulations affirmatively requiring a specified course of conduct, and standards that serve to indicate one means by which those requirements may be satisfied. The policy favoring incorporation by reference of voluntary consensus standards embodied in the NTTA and Circular A–119 is limited to ''standards'' in the latter sense. Yet the Report to ACUS details settings in which material incorporated by reference is *itself* taken as setting mandatory obligations. For example, OSHA treats as a violation of its regulations *any* departure from the form of warning placards detailed in certain standards it has incorporated by reference; it is merely a ''minor'' violation if, in departing from those forms, an employer has used warning placards suggested by subsequent voluntary consensus standards that OSHA has not yet incorporated by reference. ''Reasonable availability'' of *mandatory* standards in the age of the Internet requires their ready accessability in agency electronic reading rooms or, at the very least, in linked Web sites of standards organizations that provide at least free read-only access to those with a need to know the law governing their conduct or otherwise affecting them.

(3) When agencies use incorporation by reference to create *mandatory* standards, the legality of charging the public for access to material incorporated by reference by the voluntary standards organizations that may have developed them, under copyright, is in serious doubt. *Veeck* v. *S. Bldg. Code Cong. Int'l,* 293 F.3d 791 (5th Cir. 2002). Free availability to the affected public of incorporated materials is of particular importance, as already suggested, when those materials create mandatory obligations whose violation could have adverse consequences, whether directly or on others whose interests may be affected by the behavior it controls. Measures such as the Unfunded Mandates Reform Act make plain that Congress has set its face against agency actions that export costs to others arguably unable to bear them. And in the age of information, secret law, that the public must pay for to know, is unacceptable. Today, binding law cannot be regarded as ''reasonably available'' if it

cannot freely be found in or through an agency's electronic library. Perhaps this would require agencies to pay license fees for their use of such standards—and if so, they would then have proper bargaining incentives to keep those fees low.

Even should the Director disagree with this proposition—erroneously in our view—he should then make the level and distribution of costs for access to materials incorporated by reference a necessary element of the determination whether they are reasonably available. Since having the Internet eliminates any concern about having to print excessive materials, protecting copyright interests is the only possible rationale for permitting incorporation by reference of materials members of the public might be required to pay to see. The criterion for reasonable availability, as § 51.1(c)(1) recognizes, is whether incorporation by reference ''is intended to benefit both the Federal Government and the members of the class affected.'' Without doubt, the Government's interests are served by the work of voluntary standards organizations, yet the net benefits to the Federal Government of permitting incorporation by reference have been greatly reduced by today's possibilities for electronic publication. Benefit to the members of the class affected requires ready accessibility, whether by the presence of this material in agency electronic reading rooms or its accessibility on standards organization Web sites. Those benefits are reduced if they must be paid for—and high fees, particularly for local governments, small businesses and concerned citizens that may have a strong interest to know the governing law, will eliminate them. Any agency today proposing to export the costs of learning the law to those affected by it should, at the very least, be required to demonstrate its efforts to contain those costs (especially for small businesses, local governments, citizens, etc.) as a necessary element of demonstrating reasonable availability.

For your convenience in understanding the changes sought by this petition, we set out in the pages following 1 CFR part 51 as it might appear if they were effected. For convenience, added language is italicized, and deleted language struck out. It is important to understand, however, that we are not asking for adoption of this exact language. Indeed, the bracketed language in § 51.7(a)(3)(i(C)) is language we would prefer not appear in the regulation, but reflects the maximum recognition of voluntary standards organizations' authority to charge the public for access to incorporated materials we would regard as tolerable. What is essential is that you now reconsider the antiquated provisions of this regulation in light of the changes wrought by the Information Age and federal statutes and policies building on it.

As coordinator of this petition, Peter L. Strauss avers that each of the persons below has authorized him to include their name on this petition, with affiliations given for purposes of personal identification only.

Respectfully submitted,

Peter L. Strauss
Betts Professor of Law
Columbia Law School

William R. Andersen
Judson Falknor Professor of Law Emeritus
University of Washington School of Law

Dominique Custos
Judge John D. Wessel Distinguished Professor of Law
Loyola University New Orleans College of Law

Cynthia Farina
Roberts Research Professor of Law
Cornell Law School

Tom Field
Professor of Law
University of New Hampshire School of Law

Philip J. Harter
Scholar in Residence, Vermont Law School
Earl F. Nelson Professor Emeritus, University of Missouri Law School

Linda Jellum
Assoc. Professor of Law
Mercer Law School

William S. Jordan III
Associate Dean and C. Blake McDowell Professor of Law
University of Akron School of Law

Patrick Luff
Visiting Professor of Law
Washington and Lee University School of Law

Carl Malamud, President
Public.Resource.Org

Jonathan Masur
Assistant Professor of Law
University of Chicago Law School

Nina Mendelson
Professor of Law
Michigan Law School

Anne Joseph O'Connell,
Professor of Law,
University of California, Berkeley

Craig Oren
Professor of Law
Rutgers University Law School, Camden

Robert C. Platt
Law Firm of Robert C Platt
Washington, DC

Todd Rakoff
Byrne Professor of Administrative Law
Harvard Law School

Joshua Schwartz
E.K. Gubin Professor of Government Contracts Law
George Washington University Law School

Peter Shane
Davis and Davis Professor of Law
Ohio State Law School

Sidney A. Shapiro
University Chair in Law, Wake Forest University
Vice-President, Center for Progressive Reform

Lea B. Vaughn
Professor of Law
University of Washington School of Law

cc: Hon. Susan Collins, Ranking Member
Committee on Homeland Security and Governmental Affairs
United States Senate

Hon. Patrick D. Gallagher, Director
National Institute of Science and Technology

Hon. John P. Holdren, Director
Office of Science and Technology Policy

Hon. Joseph Lieberman, Chair
Committee on Homeland Security and Governmental Affairs
United States Senate

Ms. Maria Pallante
Register of Copyrights
Library of Congress

Hon. Cass Sunstein, Director
Office of Information and Regulatory Analysis

Hon. Stephen Van Roekel,
Federal Chief Information Officer

Hon. Paul Verkuil, Chair
Administrative Conference of the United States

[FR Doc. 2012–4399 Filed 2–24–12; 8:45 am]

BILLING CODE 1505–02–P

DEPARTMENT OF TRANSPORTATION

Federal Aviation Administration

14 CFR Part 39

[Docket No. FAA–2012–0183; Directorate Identifier 2011–NM–131–AD]

RIN 2120–AA64

Airworthiness Directives; The Boeing Company Airplanes

AGENCY: Federal Aviation Administration (FAA), DOT.

ACTION: Notice of proposed rulemaking (NPRM).

SUMMARY: We propose to adopt a new airworthiness directive (AD) for certain The Boeing Company Model 737–600, –700, –700C, –800, –900, and –900ER series airplanes. This proposed AD was prompted by reports from the manufacturer that center overhead stowage (COS) boxes could fall from their supports under forward load levels less than the 9G forward load requirements as defined by Federal Aviation Regulations. This proposed AD would require modifying COS boxes by installing new brackets, stiffeners, and hardware as needed. We are proposing this AD to prevent detachment of COS boxes at forward load levels less than 9G during an emergency landing, which would cause injury to passengers and/or crew and could impede subsequent rapid evacuation.

DATES: We must receive comments on this proposed AD by April 12, 2012.

ADDRESSES: You may send comments, using the procedures found in 14 CFR 11.43 and 11.45, by any of the following methods:

- *Federal eRulemaking Portal:* Go to *http://www.regulations.gov.* Follow the instructions for submitting comments.
- *Fax:* 202–493–2251.
- *Mail:* U.S. Department of Transportation, Docket Operations, M–

30, West Building Ground Floor, Room W12–140, 1200 New Jersey Avenue SE., Washington, DC 20590.

• *Hand Delivery:* Deliver to Mail address above between 9 a.m. and 5 p.m., Monday through Friday, except Federal holidays.

For service information identified in this proposed AD, contact Boeing Commercial Airplanes, Attention: Data & Services Management, P.O. Box 3707, MC 2H–65, Seattle, Washington 98124–2207; telephone 206–544–5000, extension 1; fax 206–766–5680; email *me.boecom@boeing.com;* Internet *https://www.myboeingfleet.com.* You may review copies of the referenced service information at the FAA, Transport Airplane Directorate, 1601 Lind Avenue SW., Renton, Washington. For information on the availability of this material at the FAA, call 425–227–1221.

Examining the AD Docket

You may examine the AD docket on the Internet at *http://www.regulations.gov;* or in person at the Docket Management Facility between 9 a.m. and 5 p.m., Monday through Friday, except Federal holidays. The AD docket contains this proposed AD, the regulatory evaluation, any comments received, and other information. The street address for the Docket Office (phone: 800–647–5527) is in the **ADDRESSES** section. Comments will be available in the AD docket shortly after receipt.

FOR FURTHER INFORMATION CONTACT: Patrick Gillespie, Aerospace Engineer, Cabin Safety and Environmental Systems Branch, ANM–150S, FAA, Seattle Aircraft Certification Office (ACO), 1601 Lind Avenue SW., Renton, WA 98057–3356; phone: 425–917–6429; fax: 425–917–6590; email: *patrick.gillespie@faa.gov.*

SUPPLEMENTARY INFORMATION:

Comments Invited

We invite you to send any written relevant data, views, or arguments about this proposal. Send your comments to an address listed under the **ADDRESSES** section. Include ''Docket No. FAA–2012–0183; Directorate Identifier 2011–NM–131–AD'' at the beginning of your comments. We specifically invite comments on the overall regulatory, economic, environmental, and energy aspects of this proposed AD. We will consider all comments received by the closing date and may amend this proposed AD because of those comments.

We will post all comments we receive, without change, to *http://www.regulations.gov*, including any personal information you provide. We will also post a report summarizing each substantive verbal contact we receive about this proposed AD.

Discussion

We received reports from the manufacturer that COS boxes could fall from their supports under forward load levels less than the 9G forward load requirements as defined by section 25.561 of the Federal Aviation Regulations (14 CFR 25.561). This condition, if not corrected, could result in detachment of COS boxes at forward load levels less than 9G during an emergency landing, which would cause injury to passengers and/or crew and could impede subsequent rapid evacuation.

Relevant Service Information

We reviewed Boeing Special Attention Service Bulletin 737–25–1641, Revision 1, dated August 8, 2011. The service information describes procedures for modifying center overhead stowage boxes. The modification includes installing new brackets, stiffeners, and hardware (bolts, washers, and nuts) as needed.

FAA's Determination

We are proposing this AD because we evaluated all the relevant information and determined the unsafe condition described previously is likely to exist or develop in other products of this same type design.

Proposed AD Requirements

This proposed AD would require accomplishing the actions specified in the service information described previously.

Costs of Compliance

We estimate that this proposed AD affects 526 airplanes of U.S. registry.

We estimate the following costs to comply with this proposed AD:

ESTIMATED COSTS

Action	Labor cost	Parts cost	Cost per product	Cost on U.S. operators
Modification	31 work-hours × $85 per hour = $2,635	$6,118	$8,753	$4,604,078

According to the manufacturer, some of the costs of this proposed AD may be covered under warranty, thereby reducing the cost impact on affected individuals. We do not control warranty coverage for affected individuals. As a result, we have included all costs in our cost estimate.

Authority for This Rulemaking

Title 49 of the United States Code specifies the FAA's authority to issue rules on aviation safety. Subtitle I, section 106, describes the authority of the FAA Administrator. Subtitle VII: Aviation Programs, describes in more detail the scope of the Agency's authority.

We are issuing this rulemaking under the authority described in Subtitle VII, Part A, Subpart III, Section 44701: ''General requirements.'' Under that section, Congress charges the FAA with promoting safe flight of civil aircraft in air commerce by prescribing regulations for practices, methods, and procedures the Administrator finds necessary for safety in air commerce. This regulation is within the scope of that authority because it addresses an unsafe condition that is likely to exist or develop on products identified in this rulemaking action.

Regulatory Findings

We determined that this proposed AD would not have federalism implications under Executive Order 13132. This proposed AD would not have a substantial direct effect on the States, on the relationship between the national Government and the States, or on the distribution of power and responsibilities among the various levels of government.

For the reasons discussed above, I certify this proposed regulation:

(1) Is not a ''significant regulatory action'' under Executive Order 12866,

(2) Is not a ''significant rule'' under the DOT Regulatory Policies and Procedures (44 FR 11034, February 26, 1979),

(3) Will not affect intrastate aviation in Alaska, and

(4) Will not have a significant economic impact, positive or negative, on a substantial number of small entities under the criteria of the Regulatory Flexibility Act.

List of Subjects in 14 CFR Part 39

Air transportation, Aircraft, Aviation safety, Incorporation by reference, Safety.

The Proposed Amendment

Accordingly, under the authority delegated to me by the Administrator, the FAA proposes to amend 14 CFR part 39 as follows:

PART 39—AIRWORTHINESS DIRECTIVES

1. The authority citation for part 39 continues to read as follows:

Authority: 49 U.S.C. 106(g), 40113, 44701.

§ 39.13 [Amended]

2. The FAA amends § 39.13 by adding the following new airworthiness directive (AD):

The Boeing Company: Docket No. FAA–2012–0183; Directorate Identifier 2011–NM–131–AD.

(a) Comments Due Date

We must receive comments by April 12, 2012.

(b) Affected ADs

None.

(c) Applicability

This AD applies to The Boeing Company Model 737–600, –700, –700C, –800, –900, and –900ER series airplanes, certificated in any category, as identified in Boeing Special Attention Service Bulletin 737–25–1641, Revision 1, dated August 8, 2011.

(d) Subject

Joint Aircraft System Component (JASC)/Air Transport Association (ATA) of America Code 25: Equipment/Furnishings.

(e) Unsafe Condition

This AD was prompted by reports from the manufacturer that center overhead stowage (COS) boxes could fall from their supports under forward load levels less than the 9G forward load requirements as defined by Federal Aviation Regulations. We are issuing this AD to prevent detachment of COS boxes at forward load levels less than 9G during an emergency landing, which would cause injury to passengers and/or crew and could impede subsequent rapid evacuation.

(f) Compliance

Comply with this AD within the compliance times specified, unless already done.

(g) Modification and Installation of Center Overhead Stowage Boxes

Within 60 months after the effective date of this AD, modify the COS boxes in accordance with the Accomplishment Instructions of Boeing Special Attention Service Bulletin 737–25–1641, Revision 1, dated August 8, 2011.

(h) Credit for Previous Actions

This paragraph provides credit for the modification required by paragraph (g) of this AD, if the modification was performed before the effective date of this AD using Boeing Special Attention Service Bulletin 737–25–1641, dated May 13, 2011.

(i) Alternative Methods of Compliance (AMOCs)

(1) The Manager, Seattle Aircraft Certification Office (ACO), FAA, has the authority to approve AMOCs for this AD, if requested using the procedures found in 14 CFR 39.19. In accordance with 14 CFR 39.19, send your request to your principal inspector or local Flight Standards District Office, as appropriate. If sending information directly to the manager of the ACO, send it to the attention of the person identified in the Related Information section of this AD. Information may be emailed to: *9-ANM-Seattle-ACO-AMOC-Requests@faa.gov*.

(2) Before using any approved AMOC, notify your appropriate principal inspector, or lacking a principal inspector, the manager of the local flight standards district office/certificate holding district office.

(3) An AMOC that provides an acceptable level of safety may be used for any repair required by this AD if it is approved by the Boeing Commercial Airplanes Organization Designation Authorization (ODA) that has been authorized by the Manager, Seattle Aircraft Certification Office to make those findings.

(j) Related Information

(1) For more information about this AD, contact Patrick Gillespie, Aerospace Engineer, Cabin Safety and Environmental Systems Branch, ANM–150S, FAA, Seattle ACO, 1601 Lind Avenue SW., Renton, WA 98057–3356; phone: 425–917–6429; fax: 425–917–6590; email: *patrick.gillespie@faa.gov.*

(2) For service information identified in this AD, contact Boeing Commercial Airplanes, Attention: Data & Services Management, P.O. Box 3707, MC 2H–65, Seattle, Washington 98124–2207; telephone 206–544–5000, extension 1; fax 206–766–5680; email *me.boecom@boeing.com;* Internet *https://www.myboeingfleet.com.* You may review copies of the referenced service information at the FAA, Transport Airplane Directorate, 1601 Lind Avenue SW., Renton, Washington. For information on the availability of this material at the FAA, call 425–227–1221.

Issued in Renton, Washington, on February 14, 2012.

Kalene C. Yanamura,

Acting Manager, Transport Airplane Directorate, Aircraft Certification Service.

[FR Doc. 2012–4382 Filed 2–24–12; 8:45 am]

BILLING CODE 4910–13–P

DEPARTMENT OF TRANSPORTATION

Federal Aviation Administration

14 CFR Part 39

[Docket No. FAA–2012–0102; Directorate Identifier 2012–NM–004–AD]

RIN 2120–AA64

Airworthiness Directives; Various Transport Category Airplanes

AGENCY: Federal Aviation Administration (FAA), DOT.

ACTION: Notice of proposed rulemaking (NPRM).

SUMMARY: We propose to supersede an existing airworthiness directive (AD) that applies to certain transport category airplanes. The existing AD currently requires either activating all chemical oxygen generators in the lavatories until the generator oxygen supply is expended, or removing the oxygen generator(s); and, for each chemical oxygen generator, after the generator is expended (or removed), removing or restowing the oxygen masks and closing the mask dispenser door. Since we issued that AD, we have identified means to provide a supplemental oxygen system that does not have the unsafe condition. This proposed AD would require installing a supplemental oxygen system in affected lavatories, which would terminate the requirements of the existing AD. We are proposing this AD to eliminate a hazard that could jeopardize flight safety, and to ensure that all lavatories have a supplemental oxygen supply.

DATES: We must receive comments on this proposed AD by April 12, 2012.

ADDRESSES: You may send comments, using the procedures found in 14 CFR 11.43 and 11.45, by any of the following methods:

- *Federal eRulemaking Portal:* Go to *http://www.regulations.gov.* Follow the instructions for submitting comments.
- *Fax:* 202–493–2251.
- *Mail:* U.S. Department of Transportation, Docket Operations, M–30, West Building Ground Floor, Room W12–140, 1200 New Jersey Avenue SE., Washington, DC 20590.
- *Hand Delivery:* Deliver to Mail address above between 9 a.m. and 5 p.m., Monday through Friday, except Federal holidays.

Examining the AD Docket

You may examine the AD docket on the Internet at *http://www.regulations.gov;* or in person at the Docket Management Facility between 9 a.m. and 5 p.m., Monday through

Friday, except Federal holidays. The AD docket contains this proposed AD, the regulatory evaluation, any comments received, and other information. The street address for the Docket Office (phone: 800–647–5527) is in the **ADDRESSES** section. Comments will be available in the AD docket shortly after receipt.

FOR FURTHER INFORMATION CONTACT: Jeff Gardlin, Aerospace Engineer, Airframe and Cabin Safety Branch, ANM–115, FAA, Transport Airplane Directorate, 1601 Lind Avenue SW., Renton, Washington 98057–3356; phone: 425–227–2136; fax: 425–227–1149; email: *jeff.gardlin@faa.gov.*

SUPPLEMENTARY INFORMATION:

Comments Invited

We invite you to send any written relevant data, views, or arguments about this proposed AD. Send your comments to an address listed under the **ADDRESSES** section. Include ''Docket No. FAA–2012–0102; Directorate Identifier 2012–NM–004–AD'' at the beginning of your comments. We specifically invite comments on the overall regulatory, economic, environmental, and energy aspects of this proposed AD. We will consider all comments received by the closing date and may amend this proposed AD because of those comments.

We will post all comments we receive, without change, to *http://www.regulations.gov*, including any personal information you provide. We will also post a report summarizing each substantive verbal contact we receive about this proposed AD.

Discussion

On March 2, 2011, we issued AD 2011–04–09, Amendment 39–16630 (76 FR 12556, March 8, 2011), for certain transport category airplanes. That AD requires either activating all chemical oxygen generators (COGs) in the lavatories until the generator oxygen supply is expended, or removing the oxygen generator(s); and, for each chemical oxygen generator, after the generator is expended (or removed), removing or restowing the oxygen masks and closing the mask dispenser door. That AD resulted from reports that the current design of these oxygen generators presents a hazard that could jeopardize flight safety. We issued that AD to eliminate this hazard.

Actions Since Existing AD Was Issued

When we issued AD 2011–04–09, Amendment 39–16630 (76 FR 12556, March 8, 2011), we also issued Special Federal Aviation Regulation (SFAR) 111 (76 FR 12550, March 8, 2011) to address the fact that, with inoperative COGs, affected airplanes would not be in compliance with certain airworthiness standards that require supplemental oxygen to be available in all lavatories. That SFAR permitted airplanes affected by AD 2011–04–09 to be delivered, modified, and returned to service even though they were not in compliance with the affected regulations.

The FAA considered SFAR 111 (76 FR 12550, March 8, 2011) and AD 2011–04–09, Amendment 39–16630 (76 FR 12556, March 8, 2011), to be interim measures until they could be superseded by additional rulemaking activity. The FAA analyzed the risk of removing supplemental oxygen from lavatories for the time required to develop a system that addresses the risk identified by the underlying AD, and concluded that the risk was low. However, this assessment was based on a finite exposure time; we never intended to allow airplanes to fly indefinitely without a supplemental oxygen supply in the lavatories. The preamble to AD 2011–04–09 explained that that AD would be in effect until superseded by further rulemaking, and SFAR 111 discussed a 2- to 4-year period to restore oxygen to lavatories, once the identified vulnerability was adequately addressed by the new rulemaking.

To address the vulnerability, the FAA chartered an Aviation Rulemaking Committee (ARC) to recommend new standards for COG installations that would eliminate the identified vulnerability, and permit acceptable installation of COGs in lavatories. The ARC completed its work, and we now have sufficient information to approve new COG installations. FAA Policy Statement PS–ANM–25–04, issued December 21, 2011 (*http://rgl.faa.gov/Regulatory_and_Guidance_Library/rgPolicy.nsf/0/06EE1CEFE9804A2F8625796E005C017F?OpenDocument&Highlight=ps-anm-25-04*), summarizes the ARC recommendations and provides guidance to applicants that want to begin restoring oxygen to lavatories in advance of rulemaking. This policy will be used in making approvals of COG installations that will be used to comply with this proposed AD. The FAA may also propose new airworthiness standards for the safe installations of COGs using the ARC recommendations.

As stated in the preamble to AD 2011–04–09, Amendment 39–16630 (76 FR 12556, March 8, 2011), our original intention was to adopt new type certification and operational rules for installing lavatory oxygen systems. In reviewing the ARC's recommendations, however, we recognized the need to terminate the requirements of that AD to adequately address the identified unsafe condition. This is consistent with our normal AD process in which we typically issue superseding ADs mandating modifications that terminate interim actions imposed by earlier superseded ADs. This proposed AD would serve as superseding action to AD 2011–04–09 and provide terminating action to the unsafe condition identified by that AD. The lack of oxygen in lavatories, as noted above, is noncompliant with airworthiness and operational standards. This proposal requires a terminating action that addresses the identified unsafe condition in a manner that maintains compliance with the existing standards.

Design approval holders have not released service information at this time. However, we anticipate that relevant service information for the terminating action will be available in time for operators to comply with this proposed AD. Depending on the technical approach taken, we propose to use different approval processes as discussed below.

Approval Process for Compliance With Proposed AD, Using Chemical Oxygen Generators

Because of the issues addressed by AD 2011–04–09, Amendment 39–16630 (76 FR 12556, March 8, 2011), COG installations will require new considerations in order to be found acceptable methods of compliance with this proposed AD. The approval for COG installations will therefore be in a manner approved by the FAA as discussed below.

Approval Process for Compliance With Proposed AD, Using Other Systems

Chemical oxygen generators are one type of system used to provide supplemental oxygen. While the majority of transport category airplanes use this system in lavatories, there are other systems as well. If another system type is used to meet this AD, the original unsafe condition is not a concern. In that case, the means of compliance is straightforward, and we have determined that the approval method could be more flexible than is usually the case for an AD. For example, delegated organizations cannot normally make compliance findings for ADs; service information associated with ADs must be adhered to exactly, or else an alternative method of compliance (AMOC) must be granted. For this proposed AD, if the type of system is other than a COG, then we have

determined that these restrictions could be relaxed. Therefore, paragraph (k)(2) of this proposed AD contains provisions to permit existing approval processes to be used, as long as the means of compliance is other than a COG. This provision takes precedence over current limitations in operators' authority to use their organizational delegations when showing compliance with an AD. In addition, if an operator uses service information that is approved for such installations, deviations from the service information can be addressed using the operator's normal procedures without requiring an AMOC.

Oversight Office

Paragraph (k) of this proposed AD refers to the FAA oversight office responsible for approval of modifications used to show compliance. This will typically be the aircraft certification office having geographic oversight of the applicant. In the case of service instructions from foreign design approval holders, this would be the Transport Standards Staff. We anticipate that modifications to meet this proposal will require either supplemental type certification or amended type certificate approval.

FAA's Determination

We are proposing this AD because we evaluated all the relevant information and determined the unsafe condition described previously is likely to exist or develop in other products of the same type design.

Proposed AD Requirements

This proposed AD would retain the requirements of AD 2011–04–09, Amendment 39–16630 (76 FR 12556, March 8, 2011). This proposed AD would also require installing a supplemental oxygen system in affected lavatories, which would terminate the existing requirements.

Costs of Compliance

We estimate that this proposed AD affects 5,500 airplanes of U.S. registry. We estimate the following costs to comply with the actions specified in this proposed AD.

ESTIMATED COSTS

Action	Labor cost	Parts cost	Cost per product	Cost on U.S. operators
Activate COG/expend oxygen supply [actions retained from AD 2011–04–09, Amendment 39–16630 (76 FR 12556, March 8, 2011)].	Up to 2 work-hours × $85 per hour = Up to $170.	$0	Up to $170	Up to $935,000.
Oxygen system installation (new proposed action).	24 work-hours × $85 per hour = $2,040.	6,000	$8,040	$44,220,000.

Authority for This Rulemaking

Title 49 of the United States Code specifies the FAA's authority to issue rules on aviation safety. Subtitle I, Section 106, describes the authority of the FAA Administrator. Subtitle VII, Aviation Programs, describes in more detail the scope of the Agency's authority.

We are issuing this rulemaking under the authority described in Subtitle VII, Part A, Subpart III, Section 44701, ''General requirements.'' Under that section, Congress charges the FAA with promoting safe flight of civil aircraft in air commerce by prescribing regulations for practices, methods, and procedures the Administrator finds necessary for safety in air commerce. This regulation is within the scope of that authority because it addresses an unsafe condition that is likely to exist or develop on products identified in this rulemaking action.

Regulatory Findings

We have determined that this proposed AD would not have federalism implications under Executive Order 13132. This proposed AD would not have a substantial direct effect on the States, on the relationship between the national Government and the States, or on the distribution of power and responsibilities among the various levels of government.

For the reasons discussed above, I certify that the proposed regulation:

(1) Is not a ''significant regulatory action'' under Executive Order 12866,

(2) Is not a ''significant rule'' under the DOT Regulatory Policies and Procedures (44 FR 11034, February 26, 1979),

(3) Will not affect intrastate aviation in Alaska, and

(4) Will not have a significant economic impact, positive or negative, on a substantial number of small entities under the criteria of the Regulatory Flexibility Act.

List of Subjects in 14 CFR Part 39

Air transportation, Aircraft, Aviation safety, Incorporation by reference, Safety.

The Proposed Amendment

Accordingly, under the authority delegated to me by the Administrator, the FAA proposes to amend 14 CFR part 39 as follows:

PART 39—AIRWORTHINESS DIRECTIVES

1. The authority citation for part 39 continues to read as follows:

Authority: 49 U.S.C. 106(g), 40113, 44701.

§ 39.13 [Amended]

2. The FAA amends § 39.13 by removing airworthiness directive (AD) 2011–04–09, Amendment 39–16630 (76 FR 12556, March 8, 2011), and adding the following new AD:

Transport Category Airplanes: Docket No. FAA–2012–0102; Directorate Identifier 2012–NM–004–AD.

(a) Comments Due Date

The FAA must receive comments on this AD action by April 12, 2012.

(b) Affected ADs

This AD supersedes AD 2011–04–09, Amendment 39–16630 (76 FR 12556, March 8, 2011).

(c) Applicability

This AD applies to transport category airplanes, in passenger-carrying operations, as specified in paragraph (c)(1) or (c)(2) of this AD.

(1) Airplanes that are in compliance with the requirements of AD 2011–04–09, Amendment 39–16630 (76 FR 12556, March 8, 2011).

(2) Airplanes equipped with any chemical oxygen generator installed in any lavatory and are:

(i) Operating under 14 CFR part 121; or

(ii) U.S.-registered and operating under 14 CFR part 129, with a maximum passenger capacity of 20 or greater.

(d) Subject

Joint Aircraft System Component (JASC)/ Air Transport Association (ATA) of America Code 35, Oxygen.

(e) Unsafe Condition

This AD was prompted by the determination that the current design of chemical oxygen generators presents a hazard

that could jeopardize flight safety. We are issuing this AD to eliminate this hazard and ensure that all lavatories have a supplemental oxygen supply.

(f) Compliance

Comply with this AD within the compliance times specified, unless already done.

(g) Restatement of Requirements of AD 2011–04–09, Amendment 39–16630 (76 FR 12556, March 8, 2011): Oxygen Generator Deactivation

Within 21 days after March 14, 2011 (the effective date of AD 2011–04–09, Amendment 39–16630 (76 FR 12556, March 8, 2011)), do the actions specified in paragraphs (g)(1) and (g)(2) of this AD.

(1) Activate all chemical oxygen generators in the lavatories until the generator oxygen supply is expended. An operator may also remove the oxygen generator(s), in accordance with existing maintenance practice, in lieu of activating it.

(2) For each chemical oxygen generator, after the generator is expended (or removed), remove or re-stow the oxygen masks and close the mask dispenser door.

Note 1 to paragraph (g) of this AD: Chemical oxygen generators are considered a hazardous material and subject to specific requirements under Title 49 CFR for shipping. Oxygen generators must be expended prior to disposal but are considered a hazardous waste; therefore, disposal must be in accordance with all Federal, State, and local regulations. Expended oxygen generators are forbidden in air transportation as cargo. For more information, contact 1–800–HMR–4922.

Note 2 to paragraph (g) of this AD: Design approval holders are not expected to release service instructions for the action specified in paragraph (g) of this AD.

(h) Restatement of Requirements of AD 2011–04–09, Amendment 39–16630 (76 FR 12556, March 8, 2011): Compliance With Federal Aviation Regulations

Notwithstanding the requirements of Sections 25.1447, 121.329, 121.333, and 129.13 of the Federal Aviation Regulations (14 CFR 25.1447, 121.329, 121.333, and 129.13), operators complying with this AD are authorized to operate affected airplanes until accomplishment of the actions specified in paragraph (k) of this AD.

(i) Restatement of Requirements of AD 2011–04–09, Amendment 39–16630 (76 FR 12556, March 8, 2011): Parts Installation

After March 14, 2011, and until accomplishment of the actions specified in paragraph (k) of this AD, no person may install a chemical oxygen generator in any lavatory on any affected airplane.

(j) Restatement of Requirements of AD 2011–04–09, Amendment 39–16630 (76 FR 12556, March 8, 2011): Special Flight Permit

Special flight permits, as described in Section 21.197 and Section 21.199 of the Federal Aviation Regulations (14 CFR 21.197 and 21.199), are not allowed for the accomplishment of the actions specified in paragraph (g) of this AD.

(k) New Requirements of This AD: Oxygen System Restoration

Within 24 months after the effective date of this AD, install a supplemental oxygen system that meets the requirements of Sections 25.1447, 121.329, 121.333, and 129.13 of the Federal Aviation Regulations (14 CFR 25.1447, 121.329, 121.333, and 129.13) in each lavatory, as specified in paragraph (k)(1) or (k)(2) of this AD, as applicable.

(1) If compliance with paragraph (k) of this AD is achieved using a chemical oxygen generator, the actions specified in paragraph (k) of this AD must be done in accordance with a method approved by the Manager of the responsible FAA oversight office having responsibility over the modification. For a method to be approved, it must meet the certification basis of the airplane, and the approval must specifically refer to this AD.

(2) If compliance with paragraph (k) of this AD is achieved without a chemical oxygen generator, the specifications of paragraphs (k)(2)(i) and (k)(2)(ii) of this AD apply.

(i) The modification must receive FAA approval in accordance with 14 CFR part 21 as a major design change. Notwithstanding operations specification restrictions to the contrary, organizational approval holders may exercise their full authority in approving installations that meet the installation requirements of this AD.

(ii) Deviation from approved service instructions and subsequent modifications may be handled by normal operator procedures without requiring approval of an alternative method of compliance.

(l) Alternative Methods of Compliance (AMOCs)

(1) The Manager, Transport Standards Staff, ANM–110, FAA, has the authority to approve AMOCs for this AD, if requested using the procedures found in 14 CFR 39.19. In accordance with 14 CFR 39.19, send your request to your principal inspector or local Flight Standards District Office, as appropriate. If sending information directly to the manager of the Transport Standards Staff, send it to the attention of the person identified in the Related Information section of this AD.

(2) Before using any approved AMOC, notify your appropriate principal inspector, or lacking a principal inspector, the manager of the local flight standards district office/certificate holding district office.

(m) Related Information

For more information about this AD, contact Jeff Gardlin, Aerospace Engineer, Airframe and Cabin Safety Branch, ANM–115, FAA, Transport Airplane Directorate, 1601 Lind Avenue SW., Renton, Washington 98057–3356; phone: 425–227–2136; fax: 425–227–1149; email: *jeff.gardlin@faa.gov.*

Issued in Renton, Washington, on January 27, 2012.

Ali Bahrami,

Manager,Transport Airplane Directorate, Aircraft Certification Service.

[FR Doc. 2012–4031 Filed 2–24–12; 8:45 am]

BILLING CODE 4910–13–P

DEPARTMENT OF TRANSPORTATION

Federal Aviation Administration

14 CFR Part 39

[Docket No. FAA–2012–0071; Directorate Identifier 2012–NE–05–AD]

RIN 2120–AA64

Airworthiness Directives; Pratt & Whitney Canada, Auxiliary Power Units

AGENCY: Federal Aviation Administration (FAA), DOT.

ACTION: Notice of proposed rulemaking (NPRM).

SUMMARY: We propose to adopt a new airworthiness directive (AD) for certain serial numbers of Pratt & Whitney Canada (P&WC) PW901A auxiliary power units (APUs) approved under Technical Standard Order TSO–C77A and installed on, but not limited to, Boeing 747–400 series airplanes. This proposed AD was prompted by several events of high-pressure turbine blade fracture leading to separation of the rear gas generator case and release of high energy debris. This proposed AD would require modifications of the rear gas generator case, exhaust duct support, and turbine exhaust duct flanges. We are proposing this AD to prevent separation of the rear gas generator case and release of high energy debris, which could result in injury and damage to the airplane.

DATES: We must receive comments on this proposed AD by April 27, 2012.

ADDRESSES: You may send comments by any of the following methods:

- *Federal eRulemaking Portal:* Go to *http://www.regulations.gov* and follow the instructions for sending your comments electronically.
- *Mail:* Docket Management Facility, U.S. Department of Transportation, 1200 New Jersey Avenue SE., West Building Ground Floor, Room W12–140, Washington, DC 20590–0001.
- *Hand Delivery:* Deliver to Mail address above between 9 a.m. and 5 p.m., Monday through Friday, except Federal holidays.
- *Fax:* 202–493–2251.

For service information identified in this proposed AD, contact Pratt & Whitney Canada Corp., 1000 Marie-Victorin, Longueuil, Quebec, Canada J4G 1A1; phone: 450–677–9411. You may review copies of the referenced service information at the FAA, Engine & Propeller Directorate, 12 New England Executive Park, Burlington, MA. For information on the availability of this material at the FAA, call 781–238–7125.

Examining the AD Docket

You may examine the AD docket on the Internet at *http://www.regulations.gov;* or in person at the Docket Operations office between 9 a.m. and 5 p.m., Monday through Friday, except Federal holidays. The AD docket contains this proposed AD, the regulatory evaluation, any comments received, and other information. The street address for the Docket Operations office (phone: 800–647–5527) is the same as the Mail address provided in the **ADDRESSES** section. Comments will be available in the AD docket shortly after receipt.

FOR FURTHER INFORMATION CONTACT: Mazdak Hobbi, Aerospace Engineer, New York Aircraft Certification Office, FAA, Engine & Propeller Directorate, 1600 Stewart Avenue, Suite 410, Westbury, NY 11590; phone: 516–228–7330; fax: 516–794–5531; email: *mazdak.hobbi@faa.gov.*

SUPPLEMENTARY INFORMATION:

Comments Invited

We invite you to send any written relevant data, views, or arguments about this proposed AD. Send your comments to an address listed under the **ADDRESSES** section. Include ''Docket No. FAA–2012–0071; Directorate Identifier 2012–NE–05–AD'' at the beginning of your comments. We specifically invite comments on the overall regulatory, economic, environmental, and energy aspects of this proposed AD. We will consider all comments received by the closing date and may amend this proposed AD based on those comments.

We will post all comments we receive, without change, to *http://www.regulations.gov*, including any personal information you provide. We will also post a report summarizing each substantive verbal contact with FAA personnel concerning this proposed AD. Using the search function of the Web site, anyone can find and read the comments in any of our dockets, including, if provided, the name of the individual who sent the comment (or signed the comment on behalf of an association, business, labor union, etc.). You may review the DOT's complete Privacy Act Statement in the **Federal Register** published on April 11, 2000 (65 FR 19477–78).

Discussion

Transport Canada, which is the aviation authority for Canada, has issued Canada AD CF–2011–40, dated October 26, 2011 (referred to after this as ''the MCAI''), to correct an unsafe condition for the specified products. The MCAI states:

> The PW901A Auxiliary Power Units have experienced several events of High Pressure Turbine (HPT) blade fracture, some of which have resulted in the separation of the rear gas generator case, exhaust duct support, the turbine exhaust duct flanges and the release of high energy debris. Subsequent investigation revealed the turbine exhaust duct can separate under excessive load conditions resulting from extreme engine distress such as HPT blade fractures.

You may obtain further information by examining the MCAI in the AD docket.

Relevant Service Information

P&WC has issued Service Bulletin No. A16255R2, dated March 1, 2011. The actions described in this service information are intended to correct the unsafe condition identified in the MCAI.

FAA's Determination and Requirements of This Proposed AD

These APUs have been approved by Canada, and are approved for operation in the United States. Pursuant to our bilateral agreement with Canada, they have notified us of the unsafe condition described in the MCAI and service information referenced above. We are proposing this AD because we evaluated all information provided by Canada, and determined the unsafe condition exists and is likely to exist or develop on other APUs of the same type design. This proposed AD would require modification of the APU rear gas generator case, exhaust duct support, and turbine exhaust duct flanges.

Costs of Compliance

Based on the service information, we estimate that this proposed AD would affect about 135 APUs installed on airplanes of U.S. registry. The average labor rate is $85 per work-hour. Required parts would cost about $39,899 per APU. Based on these figures, we estimate the cost of the proposed AD on U.S. operators to be $5,386,365.

Authority for This Rulemaking

Title 49 of the United States Code specifies the FAA's authority to issue rules on aviation safety. Subtitle I, section 106, describes the authority of the FAA Administrator. ''Subtitle VII: Aviation Programs,'' describes in more detail the scope of the Agency's authority.

We are issuing this rulemaking under the authority described in ''Subtitle VII, Part A, Subpart III, Section 44701: General requirements.'' Under that section, Congress charges the FAA with promoting safe flight of civil aircraft in air commerce by prescribing regulations for practices, methods, and procedures the Administrator finds necessary for safety in air commerce. This regulation is within the scope of that authority because it addresses an unsafe condition that is likely to exist or develop on products identified in this rulemaking action.

Regulatory Findings

We determined that this proposed AD would not have federalism implications under Executive Order 13132. This proposed AD would not have a substantial direct effect on the States, on the relationship between the national Government and the States, or on the distribution of power and responsibilities among the various levels of government.

For the reasons discussed above, I certify this proposed regulation:

1. Is not a ''significant regulatory action'' under Executive Order 12866;

2. Is not a ''significant rule'' under the DOT Regulatory Policies and Procedures (44 FR 11034, February 26, 1979); and

3. Will not have a significant economic impact, positive or negative, on a substantial number of small entities under the criteria of the Regulatory Flexibility Act.

We prepared a regulatory evaluation of the estimated costs to comply with this proposed AD and placed it in the AD docket.

List of Subjects in 14 CFR Part 39

Air transportation, Aircraft, Aviation safety, Incorporation by reference, Safety.

The Proposed Amendment

Accordingly, under the authority delegated to me by the Administrator, the FAA proposes to amend 14 CFR part 39 as follows:

PART 39—AIRWORTHINESS DIRECTIVES

1. The authority citation for part 39 continues to read as follows:

Authority: 49 U.S.C. 106(g), 40113, 44701.

§ 39.13 [Amended]

2. The FAA amends § 39.13 by adding the following new airworthiness directive (AD):

Pratt & Whitney Canada: Docket No. FAA–2012–0071; Directorate Identifier 2012–NE–05–AD.

(a) Comments Due Date

We must receive comments by April 27, 2012.

(b) Affected ADs

None.

(c) Applicability

This AD applies to Pratt & Whitney Canada (P&WC) PW901A auxiliary power units (APUs) approved under Technical Standard Order TSO–C77A and installed on, but not limited to, Boeing 747–400 series airplanes. The affected APU serial numbers are PCE 900001 through PCE 900776 inclusive.

(d) Reason

This AD was prompted by several events of high-pressure turbine blade fracture leading to separation of the rear gas generator case and release of high energy debris. We are issuing this AD to prevent separation of the rear gas generator case and release of high energy debris, which could result in injury and damage to the airplane.

(e) Actions and Compliance

Unless already done, do the following actions.

(1) Within 42 months after the effective date of this AD or the first time any maintenance is done other than preventative maintenance, whichever occurs first, modify the rear gas generator case, exhaust duct support, and turbine exhaust duct flanges.

(2) Use paragraphs 3.A. through 3.B(3)(f) of Accomplishment Instructions, and paragraph 4.A. of Appendix, of P&WC Service Bulletin (SB) No. A16255R2, dated March 1, 2011, to do the modifications.

(f) Credit for Previous Action

APUs modified previously using P&WC SB No. A16255R1, dated September 12, 2008, or P&WC SB No. A16255, dated December 12, 2007, meet the modification requirements of this AD.

(g) Alternative Methods of Compliance (AMOCs)

The Manager, New York Aircraft Certification Office, FAA, may approve AMOCs for this AD. Use the procedures found in 14 CFR 39.19 to make your request.

(h) Related Information

(1) For more information about this AD, contact Mazdak Hobbi, Aerospace Engineer, New York Aircraft Certification Office, FAA, Engine & Propeller Directorate, 1600 Stewart Avenue, Suite 410, Westbury, NY 11590; phone: 516–228–7330; fax: 516–794–5531; email: *mazdak.hobbi@faa.gov.*

(2) Refer to Transport Canada AD CF–2011–40, dated October 26, 2011, and P&WC SB No. A16255R2, dated March 1, 2011, for related information.

(3) For service information identified in this AD, contact Pratt & Whitney Canada Corp., 1000 Marie-Victorin, Longueuil, Quebec, Canada J4G 1A1; phone: 450–677–9411. You may review copies of the referenced service information at the FAA, Engine & Propeller Directorate, 12 New England Executive Park, Burlington, MA. For information on the availability of this material at the FAA, call 781–238–7125.

Issued in Burlington, Massachusetts, on February 17, 2012.

Peter A. White,

Manager, Engine & Propeller Directorate, Aircraft Certification Service.

[FR Doc. 2012–4448 Filed 2–24–12; 8:45 am]

BILLING CODE 4910–13–P

DEPARTMENT OF HOMELAND SECURITY

Coast Guard

33 CFR Part 165

[Docket No. USCG–2012–0001]

RIN 1625–AA00

Safety Zone; Magothy River, Sillery Bay, MD

AGENCY: Coast Guard, DHS.

ACTION: Notice of proposed rulemaking.

SUMMARY: The Coast Guard proposes to establish a safety zone in certain waters of the Magothy River, in Sillery Bay, Maryland. This safety zone is necessary to provide for the safety of life, property and the environment. This safety zone restricts the movement of vessels throughout the regulated area during The Bumper Bash, held annually on the fourth Saturday of July.

DATES: Comments and related material must be received by the Coast Guard on or before March 28, 2012. Requests for public meetings must be received by the Coast Guard on or before March 12, 2012.

ADDRESSES: You may submit comments identified by docket number USCG–2012–0001 using any one of the following methods:

(1) *Federal eRulemaking Portal: http://www.regulations.gov.*

(2) *Fax:* 202–493–2251.

(3) *Mail:* Docket Management Facility (M–30), U.S. Department of Transportation, West Building Ground Floor, Room W12–140, 1200 New Jersey Avenue SE., Washington, DC 20590–0001.

(4) *Hand delivery:* Same as mail address above, between 9 a.m. and 5 p.m., Monday through Friday, except Federal holidays. The telephone number is 202–366–9329.

To avoid duplication, please use only one of these four methods. See the ''Public Participation and Request for Comments'' portion of the **SUPPLEMENTARY INFORMATION** section below for instructions on submitting comments.

FOR FURTHER INFORMATION CONTACT: If you have questions on this proposed rule, call or email Mr. Ronald Houck, Sector Baltimore Waterways Management Division, Coast Guard; telephone 410–576–2674, email *Ronald.L.Houck@uscg.mil.* If you have questions on viewing or submitting material to the docket, call Renee V. Wright, Program Manager, Docket Operations, telephone 202–366–9826.

SUPPLEMENTARY INFORMATION:

Public Participation and Request for Comments

We encourage you to participate in this rulemaking by submitting comments and related materials. All comments received will be posted without change to *http://www.regulations.gov* and will include any personal information you have provided.

Submitting comments

If you submit a comment, please include the docket number for this rulemaking (USCG–2012–0001), indicate the specific section of this document to which each comment applies, and provide a reason for each suggestion or recommendation. You may submit your comments and material online (via *http://www.regulations.gov*) or by fax, mail, or hand delivery, but please use only one of these means. If you submit a comment online via *www.regulations.gov,* it will be considered received by the Coast Guard when you successfully transmit the comment. If you fax, hand deliver, or mail your comment, it will be considered as having been received by the Coast Guard when it is received at the Docket Management Facility. We recommend that you include your name and a mailing address, an email address, or a telephone number in the body of your document so that we can contact you if we have questions regarding your submission.

To submit your comment online, go to *http://www.regulations.gov,* click on the ''submit a comment'' box, which will then become highlighted in blue. In the ''Document Type'' drop down menu select ''Proposed Rule'' and insert ''USCG–2012–0001'' in the ''Keyword'' box. Click ''Search'' then click on the balloon shape in the ''Actions'' column. If you submit your comments by mail or hand delivery, submit them in an unbound format, no larger than 8½ by 11 inches, suitable for copying and electronic filing. If you submit comments by mail and would like to know that they reached the Facility, please enclose a stamped, self-addressed postcard or envelope. We will consider all comments and material received

during the comment period and may change the rule based on your comments.

Viewing Comments and Documents

To view comments, as well as documents mentioned in this preamble as being available in the docket, go to *http://www.regulations.gov,* click on the ''read comments'' box, which will then become highlighted in blue. In the ''Keyword'' box insert ''USCG–2012–0001'' and click ''Search.'' Click the ''Open Docket Folder'' in the ''Actions'' column. You may also visit the Docket Management Facility in Room W12–140 on the ground floor of the Department of Transportation West Building, 1200 New Jersey Avenue SE., Washington, DC 20590, between 9 a.m. and 5 p.m., Monday through Friday, except Federal holidays. We have an agreement with the Department of Transportation to use the Docket Management Facility.

Privacy Act

Anyone can search the electronic form of comments received into any of our dockets by the name of the individual submitting the comment (or signing the comment, if submitted on behalf of an association, business, labor union, etc.). You may review a Privacy Act notice regarding our public dockets in the January 17, 2008, issue of the **Federal Register** (73 FR 3316).

Public meeting

We do not now plan to hold a public meeting. But you may submit a request for one on or before March 12, 2012 using one of the four methods specified under **ADDRESSES**. Please explain why you believe a public meeting would be beneficial. If we determine that one would aid this rulemaking, we will hold one at a time and place announced by a later notice in the **Federal Register.**

Basis and Purpose

Each year, on the fourth Saturday in July, hundreds of recreational boaters meet in Sillery Bay at Dobbins Island, Maryland for a gathering called ''The Bumper Bash.'' The activity began in 2007. Due to the growing presence of boaters in recent years, the annual gathering has become increasingly congested. An estimated 700 recreational boats were anchored or moored alongside other boats (rafted). The crowds of persons on recreational vessels or other water craft create large lines of rafted boats filling in the beachfront area of Dobbins Island. The persons and vessels exceeded a safe limit. Accidental drownings, personnel injuries, boat fires, boat capsizings and sinkings, and boating collisions are safety concerns during such overcrowded events. Access on the water for emergency response to the beach area is critical. The Coast Guard has the authority to impose appropriate controls on activities that may pose a threat to persons, vessels and facilities under its jurisdiction. The Coast Guard proposes to establish a permanent safety zone that will be enforced annually on the fourth Saturday in July, during a gathering of persons on recreational vessels and other water craft held in the Magothy River, in Sillery Bay, Maryland. The proposed rule is needed to control movement within a waterway that is expected to be populated by persons and vessels seeking to attend The Bumper Bash activity.

Discussion of Proposed Rule

The Coast Guard anticipates a large recreational boating fleet in the Magothy River, in Sillery Bay, during The Bumper Bash at Dobbins Island, Maryland annually on the fourth Saturday in July. Due to the need for vessel control during the activity, vessel traffic will be restricted to provide for the safety of persons and vessels within the regulated area.

The purpose of this rule is to promote maritime safety, and to protect the environment and mariners transiting the area from the potential hazards associated with a large gathering of recreational vessels and other watercraft along a confined beachfront area with swimmers and others present. This rule proposes to establish a safety zone in the Magothy River, in Sillery Bay, contained within lines connecting the following positions: From position latitude 39°04′40″ N, longitude 076°27′44″ W; thence to position latitude 39°04′48″ N, longitude 076°27′19″ W; thence to position latitude 39°04′59″ N, longitude 076°27′45″ W; thence to position latitude 39°04′59″ N, longitude 076°28′01″ W; thence to position latitude 39°04′41″ N, longitude 076°27′51″ W; thence to the point of origin at position latitude 39°04′40″ N, longitude 076°27′44″ W. All coordinates reference Datum NAD 1983. The rule will impact the movement of all persons and vessels in the regulated area, and will limit the density of vessels and other watercraft operating, remaining or anchoring within the regulated area at the discretion of the Captain of the Port Baltimore, to ensure an open water route remains accessible to law enforcement and emergency personnel during the effective period. Public vessels located within the regulated area will not contribute to the density determination.

Regulatory Analyses

We developed this proposed rule after considering numerous statutes and executive orders related to rulemaking. Below we summarize our analyses based on 13 of these statutes or executive orders.

Regulatory Planning and Review

This rule is not a significant regulatory action under section 3(f) of Executive Order 12866, Regulatory Planning and Review, as supplemented by Executive Order 13563, Improving Regulation and Regulatory Review, and does not require an assessment of potential costs and benefits under section 6(a)(3) of that Executive Order 12866 or under section 1 of Executive Order 13563. The Office of Management and Budget has not reviewed it under those Orders. The effect of this regulation will not be significant due to the limited size and duration that the regulated area will be in effect and vessels transiting the Magothy River may proceed safely around the zone. In addition, notifications will be made to the maritime community via marine information broadcasts so mariners may adjust their plans accordingly.

Small Entities

Under the Regulatory Flexibility Act (5 U.S.C. 601–612), we have considered whether this proposed rule would have a significant economic impact on a substantial number of small entities. The term ''small entities'' comprises small businesses, not-for-profit organizations that are independently owned and operated and are not dominant in their fields, and governmental jurisdictions with populations of less than 50,000.

The Coast Guard certifies under 5 U.S.C. 605(b) that this proposed rule would not have a significant economic impact on a substantial number of small entities. This proposed rule may affect the following entities, some of which might be small entities: The owners or operators of vessels intending to operate, remain or anchor within the safety zone, from 8 a.m. until 10 p.m. on the fourth Saturday in July annually. This safety zone will not have a significant economic impact on a substantial number of small entities for the following reasons. Traffic would be allowed to pass within the safety zone with the permission of the Captain of the Port Baltimore. Vessels transiting the Magothy River may proceed safely around the zone. Also, the Coast Guard will issue maritime advisories widely available to users of the waterway before the effective period.

If you think that your business, organization, or governmental jurisdiction qualifies as a small entity and that this rule would have a significant economic impact on it, please submit a comment (see **ADDRESSES**) explaining why you think it qualifies and how and to what degree this rule would economically affect it.

Assistance for Small Entities

Under section 213(a) of the Small Business Regulatory Enforcement Fairness Act of 1996 (Pub. L. 104–121), we want to assist small entities in understanding this proposed rule so that they can better evaluate its effects on them and participate in the rulemaking. If the rule would affect your small business, organization, or governmental jurisdiction and you have questions concerning its provisions or options for compliance, please contact Coast Guard Sector Baltimore, Waterways Management Division, at telephone number (410) 576–2674. The Coast Guard will not retaliate against small entities that question or complain about this proposed rule or any policy or action of the Coast Guard.

Collection of Information

This proposed rule would call for no new collection of information under the Paperwork Reduction Act of 1995 (44 U.S.C. 3501–3520).

Federalism

A rule has implications for federalism under Executive Order 13132, Federalism, if it has a substantial direct effect on State or local governments and would either preempt State law or impose a substantial direct cost of compliance on them. We have analyzed this proposed rule under that Order and have determined that it does not have implications for federalism.

Unfunded Mandates Reform Act

The Unfunded Mandates Reform Act of 1995 (2 U.S.C. 1531–1538) requires Federal agencies to assess the effects of their discretionary regulatory actions. In particular, the Act addresses actions that may result in the expenditure by a State, local, or tribal government, in the aggregate, or by the private sector of $100,000,000 (adjusted for inflation) or more in any one year. Though this proposed rule would not result in such an expenditure, we do discuss the effects of this rule elsewhere in this preamble.

Taking of Private Property

This proposed rule would not cause a taking of private property or otherwise have taking implications under Executive Order 12630, Governmental Actions and Interference with Constitutionally Protected Property Rights.

Civil Justice Reform

This proposed rule meets applicable standards in sections 3(a) and 3(b)(2) of Executive Order 12988, Civil Justice Reform, to minimize litigation, eliminate ambiguity, and reduce burden.

Protection of Children

We have analyzed this proposed rule under Executive Order 13045, Protection of Children from Environmental Health Risks and Safety Risks. This rule is not an economically significant rule and would not create an environmental risk to health or risk to safety that might disproportionately affect children.

Indian Tribal Governments

This proposed rule does not have tribal implications under Executive Order 13175, Consultation and Coordination with Indian Tribal Governments, because it would not have a substantial direct effect on one or more Indian tribes, on the relationship between the Federal Government and Indian tribes, or on the distribution of power and responsibilities between the Federal Government and Indian tribes.

Energy Effects

We have analyzed this proposed rule under Executive Order 13211, Actions Concerning Regulations That Significantly Affect Energy Supply, Distribution, or Use. We have determined that it is not a ''significant energy action'' under that order because it is not a ''significant regulatory action'' under Executive Order 12866 and is not likely to have a significant adverse effect on the supply, distribution, or use of energy. The Administrator of the Office of Information and Regulatory Affairs has not designated it as a significant energy action. Therefore, it does not require a Statement of Energy Effects under Executive Order 13211.

Technical Standards

The National Technology Transfer and Advancement Act (NTTAA) (15 U.S.C. 272 note) directs agencies to use voluntary consensus standards in their regulatory activities unless the agency provides Congress, through the Office of Management and Budget, with an explanation of why using these standards would be inconsistent with applicable law or otherwise impractical. Voluntary consensus standards are technical standards (e.g., specifications of materials, performance, design, or operation; test methods; sampling procedures; and related management systems practices) that are developed or adopted by voluntary consensus standards bodies.

This proposed rule does not use technical standards. Therefore, we did not consider the use of voluntary consensus standards.

Environment

We have analyzed this proposed rule under Department of Homeland Security Management Directive 023–01 and Commandant Instruction M16475.lD, which guide the Coast Guard in complying with the National Environmental Policy Act of 1969 (NEPA) (42 U.S.C. 4321–4370f), and have made a preliminary determination that this action is one of a category of actions that do not individually or cumulatively have a significant effect on the human environment. A preliminary environmental analysis checklist supporting this determination is available in the docket where indicated under **ADDRESSES**. This proposed rule involves establishing a safety zone. We seek any comments or information that may lead to the discovery of a significant environmental impact from this proposed rule.

List of Subjects in 33 CFR Part 165

Harbors, Marine safety, Navigation (water), Reporting and recordkeeping requirements, Security measures, Waterways.

For the reasons discussed in the preamble, the Coast Guard proposes to amend 33 CFR part 165 as follows:

PART 165—REGULATED NAVIGATION AREAS AND LIMITED ACCESS AREAS

1. The authority citation for part 165 continues to read as follows:

Authority: 33 U.S.C. 1231; 46 U.S.C. Chapter 701; 50 U.S.C. 191, 195; 33 CFR 1.05–1(g), 6.04–1, 6.04–6, and 160.5; Pub. L. 107–295, 116 Stat. 2064; Department of Homeland Security Delegation No. 0170.1.

2. Add § 165.513 to read as follows:

§ 165.001 Safety Zone; Magothy River, Sillery Bay, MD.

(a) *Regulated area.* The following area is a safety zone: All waters of the Magothy River, in Sillery Bay, contained within lines connecting the following positions: from position latitude 39°04′40″ N, longitude 076°27′44″ W; thence to position latitude 39°04′48″ N, longitude 076°27′19″ W; thence to position latitude 39°04′59″ N, longitude 076°27′45″ W; thence to position latitude 39°04′59″ N, longitude

076°28′01″ W; thence to position latitude 39°04′41″ N, longitude 076°27′51″ W; thence to the point of origin at position latitude 39°04′40″ N, longitude 076°27′44″ W. All coordinates reference Datum NAD 1983.

(b) *Definitions.* As used in this section: (1) *Captain of the Port Baltimore* means the Commander, U.S. Coast Guard Sector Baltimore, Maryland.

(2) *Designated representative* means any Coast Guard commissioned, warrant, or petty officer who has been authorized by the Captain of the Port Baltimore to assist in enforcing the safety zone described in paragraph (a) of this section.

(c) *Regulations.* (1) All persons are required to comply with the general regulations governing safety zones found in 33 CFR 165.23.

(2) All vessels and persons are prohibited from entering and accessing this safety zone, except as authorized by the Captain of the Port Baltimore or his or her designated representative.

(3) Persons or vessels requiring entry into or passage within the safety zone must request authorization from the Captain of the Port Baltimore or his or her designated representative, by telephone at (410) 576–2693 or by marine band radio on VHF–FM Channel 16 (156.8 MHz), from 8 a.m. until 10 p.m. on the fourth Saturday in July annually. All Coast Guard vessels enforcing this safety zone can be contacted on marine band radio VHF–FM Channel 16 (156.8 MHz).

(4) All vessels and persons must comply with instructions of the Captain of the Port Baltimore or his or her designated representative.

(5) The operator of any vessel entering or located within this safety zone shall:

(i) travel at no-wake speed,

(ii) stop the vessel immediately upon being directed to do so by any commissioned, warrant or petty officer on board a vessel displaying a Coast Guard Ensign, and

(iii) proceed as directed by any commissioned, warrant or petty officer on board a vessel displaying a Coast Guard Ensign.

(d) *Enforcement.* The U.S. Coast Guard may be assisted in the patrol and enforcement of the safety zone by any Federal, State, and local agencies.

(e) *Enforcement period.* This section will be enforced from 8 a.m. until 10 p.m. on the fourth Saturday in July annually.

Dated: February 7, 2012.

Mark P. O'Malley,

Captain, U.S. Coast Guard, Captain of the Port Baltimore Maryland.

[FR Doc. 2012–4389 Filed 2–24–12; 8:45 am]

BILLING CODE 9110–04–P

DEPARTMENT OF HOMELAND SECURITY

Coast Guard

33 CFR Part 165

[Docket No. USCG–2012–0045]

RIN 1625–AA00

Safety Zones; Annual Events Requiring Safety Zones in the Captain of the Port Lake Michigan Zone

AGENCY: Coast Guard, DHS.

ACTION: Notice of proposed rulemaking.

SUMMARY: The Coast Guard proposes amend its regulations requiring safety zones in the Captain of the Port Lake Michigan zone. This proposed rule is intended to amend the rules that restrict vessels from portions of water areas during events that pose a hazard to public safety. The safety zones amended or established by this proposed rule are necessary to protect spectators, participants, and vessels from the hazards associated with various maritime events.

DATES: Comments and related materials must be received by the Coast Guard on or before March 28, 2012.

ADDRESSES: You may submit comments identified by docket number USCG–2012–0045 using any one of the following methods:

(1) *Federal eRulemaking Portal: http://www.regulations.gov.*

(2) *Fax:* 202–493–2251.

(3) *Mail:* Docket Management Facility (M–30), U.S. Department of Transportation, West Building Ground Floor, Room W12–140, 1200 New Jersey Avenue SE., Washington, DC 20590–0001.

(4) *Hand delivery:* Same as mail address above, between 9 a.m. and 5 p.m., Monday through Friday, except Federal holidays. The telephone number is 202–366–9329.

To avoid duplication, please use only one of these four methods. See the ''Public Participation and Request for Comments'' portion of the **SUPPLEMENTARY INFORMATION** section below for instructions on submitting comments.

FOR FURTHER INFORMATION CONTACT: If you have questions on this proposed rule, call or email BM1 Adam Kraft, Prevention Department, Coast Guard, Sector Lake Michigan, Milwaukee, WI, telephone (414) 747–7154, email *Adam.D.Kraft@uscg.mil.* If you have questions on viewing or submitting material to the docket, call Renee V. Wright, Program Manager, Docket Operations, telephone 202–366–9826.

SUPPLEMENTARY INFORMATION:

Public Participation and Request for Comments

We encourage you to participate in this rulemaking by submitting comments and related materials. All comments received will be posted, without change, to *http://www.regulations.gov* and will include any personal information you have provided.

Submitting Comments

If you submit a comment, please include the docket number for this rulemaking (USCG–2012–0045), indicate the specific section of this document to which each comment applies, and provide a reason for each suggestion or recommendation. You may submit your comments and material online (via *http://www.regulations.gov*) or by fax, mail, or hand delivery, but please use only one of these means. If you submit a comment online via *www.regulations.gov*, it will be considered received by the Coast Guard when you successfully transmit the comment. If you fax, hand deliver, or mail your comment, it will be considered as having been received by the Coast Guard when it is received at the Docket Management Facility. We recommend that you include your name and a mailing address, an email address, or a telephone number in the body of your document so that we can contact you if we have questions regarding your submission.

To submit your comment online, go to *http://www.regulations.gov*, click on the ''submit a comment'' box, which will then become highlighted in blue. In the ''Document Type'' drop down menu select ''Proposed Rule'' and insert ''USCG–2012–0045'' in the ''Keyword'' box. Click ''Search'' then click on the balloon shape in the ''Actions'' column. If you submit your comments by mail or hand delivery, submit them in an unbound format, no larger than 8½ by 11 inches, suitable for copying and electronic filing. If you submit comments by mail and would like to know that they reached the Facility, please enclose a stamped, self-addressed postcard or envelope. We will consider all comments and material received during the comment period and may

change the rule based on your comments.

Viewing Comments and Documents

To view comments, as well as documents mentioned in this preamble as being available in the docket, go to *http://www.regulations.gov*, click on the ''read comments'' box, which will then become highlighted in blue. In the ''Keyword'' box insert ''USCG–2012–0045'' and click ''Search.'' Click the ''Open Docket Folder'' in the ''Actions'' column. You may also visit the Docket Management Facility in Room W12–140 on the ground floor of the Department of Transportation West Building, 1200 New Jersey Avenue SE., Washington, DC 20590, between 9 a.m. and 5 p.m., Monday through Friday, except Federal holidays. We have an agreement with the Department of Transportation to use the Docket Management Facility.

Privacy Act

Anyone can search the electronic form of comments received into any of our dockets by the name of the individual submitting the comment (or signing the comment, if submitted on behalf of an association, business, labor union, etc.). You may review a Privacy Act notice regarding our public dockets in the January 17, 2008, issue of the **Federal Register** (73 FR 3316).

Public Meeting

We do not now plan to hold a public meeting. But you may submit a request for one the using one of the four methods specified under **ADDRESSES**. Please explain why you believe a public meeting would be beneficial. If we determine that one would aid this rulemaking, we will hold one at a time and place announced by a later notice in the **Federal Register.**

Background and Purpose

Currently, 33 CFR 165.929 lists seventy different locations in the Captain of the Port Lake Michigan zone at which safety zones have been permanently established. Each of these seventy safety zones corresponds to an annually recurring marine event. During an annual review of 33 CFR 165.929 it was found that the details of two of the annually recurring events have changed. It was also determined that five additional recurring marine events require the implementation of permanent safety zones. This proposed rule will revise the enforcement date and time of two events and add five reccurring events that require safety zones. In addition, this proposed rule will revise the organizational structure of 33 CFR 165.929 so that the events will be listed numerically rather than alphabetically. Listing the events numerically is meant to make it easier for the public to identify the annual events requiring safety zones in the Captain of the Port Lake Michigan zone.

Discussion of Proposed Rule

This proposed rule will amend the regulations found in 33 CFR 165.929, Annual Events requiring safety zones in the Captain of the Port Lake Michigan zone. Specifically, this proposed rule will revise § 165.929 in its entirety. The revision will include the modification of the name and enforcement period of one safety zone, the enforcement period of one safety zone, and the addition of five new safety zones. Each of the existing and proposed safety zones are necessary to protect vessels and people from the hazards associated with various maritime events. Such hazards include obstructions to the navigable channels, explosive dangers associated with various maritime events. Although this proposed rule will remain in effect year round, the safety zones within it will be enforced only immediately before, during, and after each corresponding marine event.

The Captain of the Port Lake Michigan will use all appropriate means to notify the public when the zones in this proposal will be enforced. Consistent with 33 CFR 165.7(a), such means of may include, among other things, publication in the **Federal Register** and Broadcast Notice to Mariners or Local Notice to Mariners. The Captain of the Port will issue a Broadcast Notice to Mariners notifying the public when enforcement of a safety zone in this section is cancelled.

Entry into, transiting, or anchoring within each of the below safety zone is prohibited unless authorized by the Captain of the Port Lake Michigan, or his designated representative. The Captain of the Port or his designated representative may be contacted via VHF Channel 16.

Regulatory Analyses

We developed this proposed rule after considering numerous statutes and executive orders related to rulemaking. Below we summarize our analyses based on 13 of these statutes or executive orders.

Regulatory Planning and Review

This rule is not a significant regulatory action under section 3(f) of Executive Order 12866, Regulatory Planning and Review, as supplemented by Executive Order 13563, Improving Regulation and Regulatory Review, and does not require an assessment of potential costs and benefits under section 6(a)(3) of that Executive Order 12866 or under section 1 of Executive Order 13563. The Office of Management and Budget has not reviewed it under those Orders. It is not ''significant'' under the regulatory policies and procedures of the Department of Homeland Security (DHS). We conclude that this proposed rule is not a significant regulatory action because we anticipate that it will have minimal impact on the economy, will not interfere with other agencies, will not adversely alter the budget of any grant or loan recipients, and will not raise any novel legal or policy issues. The safety zones amended and established by this proposed rule will be relatively small and enforced for relatively short time. Also, each safety zone is designed to minimize its impact on navigable waters. Furthermore, each safety zone has been designed to allow vessels to transit unrestricted to portions of the waterways not affected by the safety zones. Thus, restrictions on vessel movements within that particular area are expected to be minimal. Under certain conditions, moreover, vessels may still transit through each safety zone when permitted by the Captain of the Port, Sector Lake Michigan. On the whole, the Coast Guard expects insignificant adverse impact to mariners from the activation of these safety zones.

Small Entities

Under the Regulatory Flexibility Act (5 U.S.C. 601–612), we have considered whether this proposed rule would have a significant economic impact on a substantial number of small entities. The term ''small entities'' comprises small businesses, not-for-profit organizations that are independently owned and operated and are not dominant in their fields, and governmental jurisdictions with populations of less than 50,000.

The Coast Guard certifies under 5 U.S.C. 605(b) that this proposed rule would not have a significant economic impact on a substantial number of small entities.

This proposed rule would affect the following entities, some of which might be small entities: The owners and operators of vessels intending to transit or anchor in any one of the below safety zones while the safety zone is being enforced. The below safety zones will not have a significant economic impact on a substantial number of small entities for the following reasons: each safety zone in this proposed rule will be in effect for only a few hours within any given 24 hour period. Each of the safety zones will be in effect only once per

year. Furthermore, these safety zones have been designed to allow traffic to pass safely around each zone. Moreover, vessels will be allowed to pass through each zone at the discretion of the Captain of the Port, Sector Lake Michigan, or his or her designated representative.

If you think that your business, organization, or governmental jurisdiction qualifies as a small entity and that this proposed rule would have a significant economic impact on it, please submit a comment (see **ADDRESSES**) explaining why you think it qualifies and how and to what degree this rule would economically affect it.

Assistance for Small Entities

Under section 213(a) of the Small Business Regulatory Enforcement Fairness Act of 1996 (Pub. L. 104–121), we want to assist small entities in understanding this proposed rule so that they can better evaluate its effects on them and participate in the rulemaking. If this proposed rule would affect your small business, organization, or governmental jurisdiction and you have questions concerning its provisions or options for compliance, please contact BM1 Adam Kraft, Prevention Department, Coast Guard Sector Lake Michigan, Milwaukee, WI at (414) 747–7154. The Coast Guard will not retaliate against small entities that question or complain about this proposed rule or any policy or action of the Coast Guard.

Collection of Information

This proposed rule calls for no new collection of information under the Paperwork Reduction Act of 1995 (44 U.S.C. 3501–3520).

Federalism

A rule has implications for federalism under Executive Order 13132, Federalism, if it has a substantial direct effect on State or local governments and would either preempt State law or impose a substantial direct cost of compliance on them. We have analyzed this proposed rule under that Order and have determined that it does not have implications for federalism.

Unfunded Mandates Reform Act

The Unfunded Mandates Reform Act of 1995 (2 U.S.C. 1531–1538) requires Federal agencies to assess the effects of their discretionary regulatory actions. In particular, the Act addresses actions that may result in the expenditure by a State, local, or tribal government, in the aggregate, or by the private sector of $100,000,000 (adjusted for inflation) or more in any one year. Though this proposed rule would not result in such an expenditure, we do discuss the effects of this proposed rule elsewhere in this preamble.

Taking of Private Property

This proposed rule will not affect the taking of private property or otherwise have taking implications under Executive Order 12630, Governmental Actions and Interference with Constitutionally Protected Property Rights.

Civil Justice Reform

This proposed rule meets applicable standards in sections 3(a) and 3(b)(2) of Executive Order 12988, Civil Justice Reform, to minimize litigation, eliminate ambiguity, and reduce burden.

Protection of Children

We have analyzed this proposed rule under Executive Order 13045, Protection of Children from Environmental Health Risks and Safety Risks. This proposed rule is not an economically significant rule and would not create an environmental risk to health or risk to safety that might disproportionately affect children.

Indian Tribal Governments

This proposed rule does not have tribal implications under Executive Order 13175, Consultation and Coordination with Indian Tribal Governments, because it does not have a substantial direct effect on one or more Indian tribes, on the relationship between the Federal Government and Indian tribes, or on the distribution of power and responsibilities between the Federal Government and Indian tribes.

Energy Effects

We have analyzed this proposed rule under Executive Order 13211, Actions Concerning Regulations That Significantly Affect Energy Supply, Distribution, or Use. We have determined that it is not a ''significant energy action'' under that order because it is not a ''significant regulatory action'' under Executive Order 12866 and is not likely to have a significant adverse effect on the supply, distribution, or use of energy. The Administrator of the Office of Information and Regulatory Affairs has not designated it as a significant energy action. Therefore, it does not require a Statement of Energy Effects under Executive Order 13211.

Technical Standards

The National Technology Transfer and Advancement Act (NTTAA) (15 U.S.C. 272 note) directs agencies to use voluntary consensus standards in their regulatory activities unless the agency provides Congress, through the Office of Management and Budget, with an explanation of why using these standards would be inconsistent with applicable law or otherwise impractical. Voluntary consensus standards are technical standards (e.g., specifications of materials, performance, design, or operation; test methods; sampling procedures; and related management systems practices) that are developed or adopted by voluntary consensus standards bodies.

This proposed rule does not use technical standards. Therefore, we did not consider the use of voluntary consensus standards.

Environment

We have analyzed this proposed rule under Department of Homeland Security Management Directive 023–01 and Commandant Instruction M16475.lD, which guide the Coast Guard in complying with the National Environmental Policy Act of 1969 (NEPA) (42 U.S.C. 4321–4370f), and have made a preliminary determination that this action is one of a category of actions that do not individually or cumulatively have a significant effect on the human environment. This proposed rule involves the establishing of security zones and therefore, is categorically excluded under paragraph 34(g) of the Instruction. A preliminary environmental analysis checklist supporting this preliminary determination is available in the docket where indicated under **ADDRESSES**. We seek any comments or information that may lead to the discovery of a significant environmental impact from this proposed rule.

List of Subjects in 33 CFR Part 165

Harbors, Marine safety, Navigation (water), Reporting and recordkeeping requirements, Security measures, Waterways.

For the reasons discussed in the preamble, the Coast Guard proposes to amend 33 CFR Part 165 as follows:

PART 165—REGULATED NAVIGATION AREAS AND LIMITED ACCESS AREAS

1. The authority citation for Part 165 continues to read as follows:

Authority: 33 U.S.C. 1231; 46 U.S.C. Chapter 701, 3306, 3703; 50 U.S.C. 191, 195; 33 CFR 1.05–1, 6.04–1, 6.04–6, and 160.5; Pub. L. 107–295, 116 Stat. 2064; Department of Homeland Security Delegation No. 0170.1.

2. Revise § 165.929 to read as follows:

§ 165.929 Safety Zones; Annual events requiring safety zones in the Captain of the Port Lake Michigan zone.

(a) Safety Zones. The following are designated as safety zones:

(1) St. Patrick's Day Fireworks; Manitowoc, WI.

(i) Location. All waters of the Manitowoc River and Manitowoc Harbor, near the mouth of the Manitowoc River on the south shore, within the arc of a circle with a 100-foot radius from the fireworks launch site located in position 44°05′30″ N, 087°39′12″ W (NAD 83).

(ii) Enforcement date and time. The third Saturday of March; 5:30 p.m. to 7 p.m.

(2) Michigan Aerospace Challenge Sport Rocket Launch; Muskegon, MI.

(i) Location. All waters of Muskegon Lake, near the West Michigan Dock and Market Corp facility, within the arc of a circle with a 1500-yard radius from the rocket launch site located in position 43°14′21″ N, 086°15′35″ W (NAD 83).

(ii) Enforcement date and time. The last Saturday of April; 8 a.m. to 4 p.m.

(3) Tulip Time Festival Fireworks; Holland, MI.

(i) Location. All waters of Lake Macatawa, near Kollen Park, within the arc of a circle with a 1000-foot radius from the fireworks launch site in position 42°47′23″ N, 086°07′22″ W (NAD 83).

(ii) Enforcement date and time. The first Friday of May; 7 p.m. to 11 p.m. If the Friday fireworks are cancelled due to inclement weather, then this safety zone will be enforced on the first Saturday of May; 7 p.m. to 11 p.m.

(4) Rockets for Schools Rocket Launch; Sheboygan, WI.

(i) Location. All waters of Lake Michigan and Sheboygan Harbor, near the Sheboygan South Pier, within the arc of a circle with a 1500-yard radius from the rocket launch site located with its center in position 43°44′55″ N, 087°41′52″ W (NAD 83).

(ii) Enforcement date and time. The first Saturday of May; 8 a.m. to 5 p.m.

(5) Celebrate De Pere; De Pere, WI.

(i) Location. All waters of the Fox River, near Voyageur Park, within the arc of a circle with a 500-foot radius from the fireworks launch site located in position 44°27′10″ N, 088°03′50″ W (NAD 83).

(ii) Enforcement date and time. The Sunday before Memorial Day; 8:30 p.m. to 10 p.m.

(6) Michigan Super Boat Grand Prix; Michigan City, IN.

(i) Location. All waters of Lake Michigan in the vicinity of Michigan City, IN, bound by a line drawn from 41°43′42″ N, 086°54′18″ W; then north to 41°43′49″ N, 086°54′31″ W; then east to 41°44′48″ N, 086°51′45″ W; then south to 41°44′42″ N, 086°51′31″ W; then west returning to the point of origin. (NAD 83)

(ii) Enforcement date and time. The first Sunday of August; 9 a.m. to 4 p.m.

(7) River Splash; Milwaukee, WI.

(i) Location. All waters of the Milwaukee River, near Pere Marquette Park, within the arc of a circle with a 300-foot radius from the fireworks launch site located on a barge in position 43°02′32″ N, 087°54′45″ W (NAD 83).

(ii) Enforcement date and time. The first Friday and Saturday of June; 9 p.m. to 11 p.m. each day.

(8) International Bayfest; Green Bay, WI.

(i) Location. All waters of the Fox River, near the Western Lime Company 1.13 miles above the head of the Fox River, within the arc of a circle with a 1000-foot radius from the fireworks launch site located in position 44°31′24″ N, 088°00′42″ W (NAD 83).

(ii) Enforcement date and time. The second Friday of June; 9 p.m. to 11 p.m.

(9) Harborfest Music and Family Festival; Racine, WI.

(i) Location. All waters of Lake Michigan and Racine Harbor, near the Racine Launch Basin Entrance Light, within the arc of a circle with a 200-foot radius from the fireworks launch site located in position 42°43′43″ N, 087°46′40″ W (NAD 83).

(ii) Enforcement date and time. Friday and Saturday of the third complete weekend of June; 9 p.m. to 11 p.m. each day.

(10) Spring Lake Heritage Festival Fireworks; Spring Lake, MI.

(i) Location. All waters of the Grand River, near buoy 14A, within the arc of a circle with a 500-foot radius from the fireworks launch site located on a barge in position 43°04′24″ N, 086°12′42″ W (NAD 83).

(ii) Enforcement date and time. The third Saturday of June; 9 p.m. to 11 p.m.

(11) Elberta Solstice Festival Fireworks; Elberta, MI.

(i) Location. All waters of Betsie Bay, near Waterfront Park, within the arc of a circle with a 500-foot radius from the fireworks launch site located in position 44°37′43″ N, 086°14′27″ W (NAD 83).

(ii) Enforcement date and time. The last Saturday of June; 9 p.m. to 11 p.m.

(12) Pentwater July Third Fireworks; Pentwater, MI.

(i) Location. All waters of Lake Michigan and the Pentwater Channel within the arc of a circle with a 1000-foot radius from the fireworks launch site located in position 43°46′57″ N, 086°26′38″ W (NAD 83).

(ii) Enforcement date and time. July 3; 9 p.m. to 11 p.m. If the July 3 fireworks are cancelled due to inclement weather, then this safety zone will be enforced July 4; 9 p.m. to 11 p.m.

(13) Taste of Chicago Fireworks; Chicago, IL.

(i) Location. All waters of Monroe Harbor and all waters of Lake Michigan bounded by a line drawn from 41°53′24″ N, 087°35′59″ W; then east to 41°53′15″ N, 087°35′26″ W; then south to 41°52′49″ N, 087°35′26″ W; then southwest to 41°52′27″ N, 087°36′37″ W; then north to 41°53′15″ N, 087°36′33″ W; then east returning to the point of origin (NAD 83).

(ii) Enforcement date and time. July 3; 9 p.m. to 11 p.m. If the July 3 fireworks are cancelled due to inclement weather, then this safety zone will be enforced July 4; 9 p.m. to 11 p.m.

(14) U.S. Bank Fireworks; Milwaukee, WI.

(i) Location. All waters and adjacent shoreline of Milwaukee Harbor, in the vicinity of Veteran's park, within the arc of a circle with a 1200-foot radius from the center of the fireworks launch site which is located on a barge with its approximate position located at 43°02′22″ N, 087°53′29″ W (NAD 83).

(ii) Enforcement date and time. July 3; 9 p.m. to 11 p.m. If the July 3 fireworks are cancelled due to inclement weather, then this safety zone will be enforced July 4; 9 p.m. to 11 p.m.

(15) Independence Day Fireworks; Manistee, MI.

(i) Location. All waters of Lake Michigan, in the vicinity of the First Street Beach, within the arc of a circle with a 1000-foot radius from the fireworks launch site located in position 44°14′51″ N, 086°20′46″ W (NAD 83).

(ii) Enforcement date and time. July 3; 9 p.m. to 11 p.m. If the July 3 fireworks are cancelled due to inclement weather, then this safety zone will be enforced July 4; 9 p.m. to 11 p.m.

(16) Frankfort Independence Day Fireworks; Frankfort, MI.

(i) Location. All waters of Lake Michigan and Frankfort Harbor, bounded by a line drawn from 44°38′05″ N, 086°14′50″ W; then south to 44°37′39″ N, 086°14′50″ W; then west to 44°37′39″ N, 086°15′20″ W; then north to 44°38′05″ N, 086°15′20″ W; then east returning to the point of origin (NAD 83).

(ii) Enforcement date and time. July 4; 9 p.m. to 11 p.m. If the July 4 fireworks are cancelled due to inclement weather, then this safety zone will be enforced July 5; 9 p.m. to 11 p.m.

(17) Freedom Festival Fireworks; Ludington, MI.

(i) Location. All waters of Lake Michigan and Ludington Harbor, in the vicinity of the Loomis Street Boat Ramp, within the arc of a circle with a 1000-foot radius from the fireworks launch site located in position 43°57′16″ N, 086°27′42″ W (NAD 83).

(ii) Enforcement date and time. July 4; 9 p.m. to 11 p.m. If the July 4 fireworks are cancelled due to inclement weather, then this safety zone will be enforced July 5; 9 p.m. to 11 p.m.

(18) White Lake Independence Day Fireworks; Montague, MI.

(i) Location. All waters of White Lake, in the vicinity of the Montague boat launch, within the arc of a circle with a 1000-foot radius from the fireworks launch site located in position 43°24′33″ N, 086°21′28″ W (NAD 83).

(ii) Enforcement date and time. July 4; 9 p.m. to 11 p.m. If the July 4 fireworks are cancelled due to inclement weather, then this safety zone will be enforced July 5; 9 p.m. to 11 p.m.

(19) Muskegon Summer Celebration July Fourth Fireworks; Muskegon, MI.

(i) Location. All waters of Muskegon Lake, in the vicinity of Heritage Landing, within the arc of a circle with a 1000-foot radius from a fireworks launch site located on a barge in position 43°14′00″ N, 086°15′50″ W (NAD 83).

(ii) Enforcement date and time. July 4; 9 p.m. to 11 p.m. If the July 4 fireworks are cancelled due to inclement weather, then this safety zone will be enforced July 5; 9 p.m. to 11 p.m.

(iii) Impact on Special Anchorage Area regulations: Regulations for that portion of the Muskegon Lake East Special Anchorage Area, as described in 33 CFR 110.81(b), which are overlapped by this regulation, are suspended during this event. The remaining area of the Muskegon Lake East Special Anchorage Area not impacted by this regulation remains available for anchoring during this event.

(20) Grand Haven Jaycees Annual Fourth of July Fireworks; Grand Haven, MI.

(i) Location. All waters of The Grand River between longitude 087°14′00″ W, near The Sag, then west to longitude 087°15′00″ W, near the west end of the south pier (NAD 83).

(ii) Enforcement date and time. July 4; 9 p.m. to 11 p.m. If the July 4 fireworks are cancelled due to inclement weather, then this safety zone will be enforced July 5; 9 p.m. to 11 p.m.

(21) Celebration Freedom Fireworks; Holland, MI.

(i) Location. All waters of Lake Macatawa, in the vicinity of Kollen Park, within the arc of a circle with a 1000-foot radius from the fireworks launch site located in position 42°47′23″ N, 086°07′22″ W (NAD 83).

(ii) Enforcement date and time. July 4, 2007; 9 p.m. to 11 p.m. Thereafter, this section will be enforced the Saturday prior to July 4; 9 p.m. to 11 p.m. If the fireworks are cancelled due to inclement weather, then this safety zone will be enforced the Sunday prior to July 4; 9 p.m. to 11 p.m.

(22) Van Andel Fireworks Show; Holland, MI.

(i) Location. All waters of Lake Michigan and the Holland Channel within the arc of a circle with a 1000-foot radius from the fireworks launch site located in position 42°46′21″ N, 086°12′48″ W (NAD 83).

(ii) Enforcement date and time. July 3; 9 p.m. to 11 p.m. If the July 3 fireworks are cancelled due to inclement weather, then this safety zone will be enforced July 4; 9 p.m. to 11 p.m.

(23) Independence Day Fireworks; Saugatuck, MI.

(i) Location. All waters of Kalamazoo Lake within the arc of a circle with a 1000-foot radius from the fireworks launch site in position 42°38′52″ N, 086°12′18″ W (NAD 83).

(ii) Enforcement date and time. July 4; 9 p.m. to 11 p.m. If the July 4 fireworks are cancelled due to inclement weather, then this safety zone will be enforced July 5; 9 p.m. to 11 p.m.

(24) South Haven Fourth of July Fireworks; South Haven, MI.

(i) Location. All waters of Lake Michigan and the Black River within the arc of a circle with a 1000-foot radius from the fireworks launch site located in position 42°24′08″ N, 086°17′03″ W (NAD 83).

(ii) Enforcement date and time. July 4; 9 p.m. to 11 p.m. If the July 4 fireworks are cancelled due to inclement weather, then this safety zone will be enforced July 5; 9 p.m. to 11 p.m.

(25) St. Joseph Fourth of July Fireworks; St. Joseph, MI.

(i) Location. All waters of Lake Michigan and the St. Joseph River within the arc of a circle with a 1000-foot radius from the fireworks launch site located in position 42°06′48″ N, 086°29′5″ W (NAD 83).

(ii) Enforcement date and time. July 4; 9 p.m. to 11 p.m. If the July 4 fireworks are cancelled due to inclement weather, then this safety zone will be enforced July 5; 9 p.m. to 11 p.m.

(26) Town of Dune Acres Independence Day Fireworks; Dune Acres, IN.

(i) Location. All waters of Lake Michigan within the arc of a circle with a 1000-foot radius from the fireworks launch site located in position 41°39′23″ N, 087°04′59″ W (NAD 83).

(ii) Enforcement date and time. July 4; 9 p.m. to 11 p.m. If the July 4 fireworks are cancelled due to inclement weather, then this safety zone will be enforced July 5; 9 p.m. to 11 p.m.

(27) Gary Fourth of July Fireworks; Gary, IN.

(i) Location. All waters of Lake Michigan, approximately 2.5 miles east of Gary Harbor, within the arc of a circle with a 500-foot radius from the fireworks launch site located in position 41°37′19″ N, 087°14′31″ W (NAD 83).

(ii) Enforcement date and time. July 4; 9 p.m. to 11 p.m. If the July 4 fireworks are cancelled due to inclement weather, then this safety zone will be enforced July 5; 9 p.m. to 11 p.m.

(28) Joliet Independence Day Celebration Fireworks; Joliet, IL.

(i) Location. All waters of the Des Plains River, at mile 288, within the arc of a circle with a 500-foot radius from the fireworks launch site located in position 41°31′31″ N, 088°05′15″ W (NAD 83).

(ii) Enforcement date and time. July 3; 9 p.m. to 11 p.m. If the July 3 fireworks are cancelled due to inclement weather, then this safety zone will be enforced July 4; 9 p.m. to 11 p.m.

(29) Glencoe Fourth of July Celebration Fireworks; Glencoe, IL.

(i) Location. All waters of Lake Michigan, in the vicinity of Lake Front Park, within the arc of a circle with a 500-foot radius from the fireworks launch site located in position 42°08′17″ N, 087°44′55″ W (NAD 83).

(ii) Enforcement date and time. July 4; 9 p.m. to 11 p.m. If the July 4 fireworks are cancelled due to inclement weather, then this safety zone will be enforced July 5; 9 p.m. to 11 p.m.

(30) Lakeshore Country Club Independence Day Fireworks; Glencoe, IL.

(i) Location. All waters of Lake Michigan within the arc of a circle with a 1000-foot radius from the fireworks launch site located in position 42°08′27″ N, 087°44′57″ W (NAD 83).

(ii) Enforcement date and time. July 4; 9 p.m. to 11 p.m. If the July 4 fireworks are cancelled due to inclement weather, then this safety zone will be enforced July 5; 9 p.m. to 11 p.m.

(31) Shore Acres Country Club Independence Day Fireworks; Lake Bluff, IL.

(i) Location. All waters of Lake Michigan, approximately one mile north of Lake Bluff, IL, within the arc of a circle with a 1000-foot radius from the fireworks launch site located in position 42°17′59″ N, 087°50′03″ W (NAD 83).

(ii) Enforcement date and time. July 4; 9 p.m. to 11 p.m. If the July 4 fireworks are cancelled due to inclement weather,

then this safety zone will be enforced July 5; 9 p.m. to 11 p.m.

(32) Kenosha Independence Day Fireworks; Kenosha, WI.

(i) Location. All waters of Lake Michigan and Kenosha Harbor within the arc of a circle with a 1000-foot radius from the fireworks launch site located in position 42°35′17″ N, 087°48′27″ W (NAD 83).

(ii) Enforcement date and time. July 4; 9 p.m. to 11 p.m. If the July 4 fireworks are cancelled due to inclement weather, then this safety zone will be enforced July 5; 9 p.m. to 11 p.m.

(33) Fourthfest of Greater Racine Fireworks; Racine, WI.

(i) Location. All waters of Lake Michigan and Racine Harbor, in the vicinity of North Beach, within the arc of a circle with a 1000-foot radius from the fireworks launch site located in position 42°44′17″ N, 087°46′42″ W (NAD 83).

(ii) Enforcement date and time. July 4; 9 p.m. to 11 p.m. If the July 4 fireworks are cancelled due to inclement weather, then this safety zone will be enforced July 5; 9 p.m. to 11 p.m.

(34) Sheboygan Fourth of July Celebration Fireworks; Sheboygan, WI.

(i) Location. All waters of Lake Michigan and Sheboygan Harbor, in the vicinity of the south pier, within the arc of a circle with a 1000-foot radius from the fireworks launch site located in position 43°44′55″ N, 087°41′51″ W (NAD 83).

(ii) Enforcement date and time. July 4; 9 p.m. to 11 p.m. If the July 4 fireworks are cancelled due to inclement weather, then this safety zone will be enforced July 5; 9 p.m. to 11 p.m.

(35) Manitowoc Independence Day Fireworks; Manitowoc, WI.

(i) Location. All waters of Lake Michigan and Manitowoc Harbor, in the vicinity of south breakwater, within the arc of a circle with a 1000-foot radius from the fireworks launch site located in position 44°05′24″ N, 087°38′45″ W (NAD 83).

(ii) Enforcement date and time. July 4; 9 p.m. to 11 p.m. If the July 4 fireworks are cancelled due to inclement weather, then this safety zone will be enforced July 5; 9 p.m. to 11 p.m.

(36) Sturgeon Bay Independence Day Fireworks; Sturgeon Bay, WI.

(i) Location. All waters of Sturgeon Bay, in the vicinity of Sunset Park, within the arc of a circle with a 1000-foot radius from the fireworks launch site located on a barge in position 44°50′37″ N, 087°23′18″ W (NAD 83).

(ii) Enforcement date and time. July 4; 9 p.m. to 11 p.m. If the July 4 fireworks are cancelled due to inclement weather, then this safety zone will be enforced July 5; 9 p.m. to 11 p.m.

(37) Fish Creek Independence Day Fireworks; Fish Creek, WI. (i) Location. All waters of Green Bay, in the vicinity of Fish Creek Harbor, within the arc of a circle with a 1000-foot radius from the fireworks launch site located on a barge in position 45°07′52″ N, 087°14′37″ W (NAD 83).

(ii) Enforcement date and time. The first Saturday after July 4; 9 p.m. to 11 p.m.

(38) Celebrate Americafest Fireworks; Green Bay, WI.

(i) Location. All waters of the Fox River between the railroad bridge located 1.03 miles above the mouth of the Fox River and the Main Street Bridge located 1.58 miles above the mouth of the Fox River, including all waters of the turning basin east to the mouth of the East River.

(ii) Enforcement date and time. July 4; 9 p.m. to 11 p.m. If the July 4 fireworks are cancelled due to inclement weather, then this safety zone will be enforced July 5; 9 p.m. to 11 p.m.

(39) Marinette Fourth of July Celebration Fireworks; Marinette, WI.

(i) Location. All waters of the Menominee River, in the vicinity of Stephenson Island, within the arc of a circle with a 1000-foot radius from the fireworks launch site located in position 45°06′09″ N, 087°37′39″ W and all waters located between the Highway U.S. 41 bridge and the Hattie Street Dam (NAD 83).

(ii) Enforcement date and time. July 4; 9 p.m. to 11 p.m. If the July 4 fireworks are cancelled due to inclement weather, then this safety zone will be enforced July 5; 9 p.m. to 11 p.m.

(40) Evanston Fourth of July Fireworks; Evanston, IL.

(i) Location. All waters of Lake Michigan, in the vicinity of Centennial Park Beach, within the arc of a circle with a 500-foot radius from the fireworks launch site located in position 42°02′56″ N, 087°40′21″ W (NAD 83).

(ii) Enforcement date and time. July 4; 9 p.m. to 11 p.m. If the July 4 fireworks are cancelled due to inclement weather, then this safety zone will be enforced July 5; 9 p.m. to 11 p.m.

(41) Muskegon Summer Celebration Fireworks; Muskegon, MI.

(i) Location. All waters of Muskegon Lake, in the vicinity of Heritage Landing, within the arc of a circle with a 1000-foot radius from a fireworks barge located in position 43°14′00″ N, 086°15′50″ W (NAD 83).

(ii) Enforcement date and time. The Sunday following July 4; 9 p.m. to 11 p.m.

(iii) Impact on Special Anchorage Area regulations: Regulations for that portion of the Muskegon Lake East Special Anchorage Area, as described in 33 CFR 110.81(b), which are overlapped by this regulation, are suspended during this event. The remaining area of the Muskegon Lake East Special Anchorage Area is not impacted by this regulation and remains available for anchoring during this event.

(42) Gary Air and Water Show; Gary, IN.

(i) Location. All waters of Lake Michigan bounded by a line drawn from 41°37′42″ N, 087°16′38″ W; then east to 41°37′54″ N, 087°14′00″ W; then south to 41°37′30″ N, 087°13′56″ W; then west to 41°37′17″ N, 087°16′36″ W; then north returning to the point of origin (NAD 83).

(ii) Enforcement date and time. Friday, Saturday, and Sunday of the second weekend of July; from 10 a.m. to 9 p.m. each day.

(43) Milwaukee Air and Water Show; Milwaukee, WI.

(i) Location. All waters and adjacent shoreline of Lake Michigan and Bradford Beach located within a 4000-yard by 1000-yard rectangle. The rectangle will be bounded by the points beginning at points beginning at 43°02′50″ N, 087°52′36″ W; then northeast to 43°04′33″ N, 087°51′12″ W; then northwest to 43°04′40″ N, 087°51′29″ W; then southwest to 43°02′57″ N, 087°52′53″ W; the southeast returning to the point of origin (NAD 83).

(ii) Enforcement date and time. Thursday, Friday, Saturday, and Sunday of the first weekend of August; from 10 a.m. to 5 p.m. each day.

(44) Annual Trout Festival Fireworks; Kewaunee, WI.

(i) Location. All waters of Kewaunee Harbor and Lake Michigan within the arc of a circle with a 1000-foot radius from the fireworks launch site located in position 44°27′29″ N, 087°29′45″ W (NAD 83).

(ii) Enforcement date and time. Friday of the second complete weekend of July; 9 p.m. to 11 p.m.

(45) Michigan City Summerfest Fireworks; Michigan City, IN.

(i) Location. All waters of Michigan City Harbor and Lake Michigan within the arc of a circle with a 1000-foot radius from the fireworks launch site located in position 41°43′42″ N, 086°54′37″ W (NAD 83).

(ii) Enforcement date and time. Sunday of the first complete weekend of July; 9 p.m. to 11 p.m.

(46) Port Washington Fish Day Fireworks; Port Washington, WI.

(i) Location. All waters of Port Washington Harbor and Lake Michigan, in the vicinity of the WE Energies coal dock, within the arc of a circle with a 1000-foot radius from the fireworks launch site located in position 43°23′07″ N, 087°51′54″ W (NAD 83).

(ii) Enforcement date and time. The third Saturday of July; 9 p.m. to 11 p.m.

(47) Bay View Lions Club South Shore Frolics Fireworks; Milwaukee, WI.

(i) Location. All waters of Milwaukee Harbor and Lake Michigan, in the vicinity of South Shore Park, within the arc of a circle with a 500-foot radius from the fireworks launch site in position 42°59′42″ N, 087°52′52″ W (NAD 83).

(ii) Enforcement date and time. Friday, Saturday, and Sunday of the second or third weekend of July; 9 p.m. to 11 p.m. each day.

(48) Venetian Festival Fireworks; St. Joseph, MI.

(i) Location. All waters of Lake Michigan and the St. Joseph River, near the east end of the south pier, within the arc of a circle with a 1000-foot radius from the fireworks launch site located in position 42°06′48″ N, 086°29′15″ W (NAD 83).

(ii) Enforcement date and time. Saturday of the third complete weekend of July; 9 p.m. to 11 p.m.

(49) Joliet Waterway Daze Fireworks; Joliet, IL.

(i) Location. All waters of the Des Plaines River, at mile 287.5, within the arc of a circle with a 300-foot radius from the fireworks launch site located in position 41°31′15″ N, 088°05′17″ W (NAD 83).

(ii) Enforcement date and time. Friday and Saturday of the third complete weekend of July; 9 p.m. to 11 p.m. each day.

(50) EAA Airventure; Oshkosh, WI.

(i) Location. All waters of Lake Winnebago bounded by a line drawn from 43°57′30″ N, 088°30′00″ W; then south to 43°56′56″ N, 088°29′53″ W, then east to 43°56′40″ N, 088°28′40″ W; then north to 43°57′30″ N, 088°28′40″ W; then west returning to the point of origin (NAD 83).

(ii) Enforcement date and time. The last complete week of July, beginning Monday and ending Sunday; from 8 a.m. to 8 p.m. each day.

(51) Venetian Night Fireworks; Saugatuck, MI.

(i) Location. All waters of Kalamazoo Lake within the arc of a circle with a 500-foot radius from the fireworks launch site located on a barge in position 42°38′52″ N, 086°12′18″ W (NAD 83).

(ii) Enforcement date and time. The last Saturday of July; 9 p.m. to 11 p.m.

(52) Roma Lodge Italian Festival Fireworks; Racine, WI.

(i) Location. All waters of Lake Michigan and Racine Harbor within the arc of a circle with a 1000-foot radius from the fireworks launch site located in position 42°44′04″ N, 087°46′20″ W (NAD 83).

(ii) Enforcement date and time. Friday and Saturday of the last complete weekend of July; 9 p.m. to 11 p.m.

(53) Venetian Night Fireworks; Chicago, IL.

(i) Location. All waters of Monroe Harbor and all waters of Lake Michigan bounded by a line drawn from 41°53′03″ N, 087°36′36″ W; then east to 41°53′03″ N, 087°36′21″ W; then south to 41°52′27″ N, 087°36′21″ W; then west to 41°52′27″ N, 087°36′37″ W; then north returning to the point of origin (NAD 83).

(ii) Enforcement date and time. Saturday of the last weekend of July; 9 p.m. to 11 p.m.

(54) Port Washington Maritime Heritage Festival Fireworks; Port Washington, WI.

(i) Location. All waters of Port Washington Harbor and Lake Michigan, in the vicinity of the WE Energies coal dock, within the arc of a circle with a 1000-foot radius from the fireworks launch site located in position 43°23′07″ N, 087°51′54″ W (NAD 83).

(ii) Enforcement date and time. Saturday of the last complete weekend of July or the second weekend of August; 9 p.m. to 11 p.m.

(55) Grand Haven Coast Guard Festival Fireworks; Grand Haven, MI.

(i) Location. All waters of the Grand River between longitude 087°14′00″ W, near The Sag, then west to longitude 087°15′00″ W, near the west end of the south pier (NAD 83).

(ii) Enforcement date and time. First weekend of August; 9 p.m. to 11 p.m.

(56) Sturgeon Bay Yacht Club Evening on the Bay Fireworks; Sturgeon Bay, WI.

(i) Location. All waters of Sturgeon Bay, in the vicinity of the Sturgeon Bay Yacht Club, within the arc of a circle with a 500-foot radius from the fireworks launch site located on a barge in position 44°49′33″ N, 087°22′26″ W (NAD 83).

(ii) Enforcement date and time. The first Saturday of August; 9 p.m. to 11 p.m.

(57) Hammond Marina Venetian Night Fireworks; Hammond, IN.

(i) Location. All waters of Hammond Marina and Lake Michigan within the arc of a circle with a 1000-foot radius from the fireworks launch site located in position 41°41′53″ N, 087°30′43″ W (NAD 83).

(ii) Enforcement date and time. The first Saturday of August; 9 p.m. to 11 p.m.

(58) North Point Marina Venetian Festival Fireworks; Winthrop Harbor, IL.

(i) Location. All waters of Lake Michigan within the arc of a circle with a 1000-foot radius from the fireworks launch site located in position 42°28′55″ N, 087°47′56″ W (NAD 83).

(ii) Enforcement date and time. The second Saturday of August; 9 p.m. to 11 p.m.

(59) Waterfront Festival Fireworks; Menominee, MI.

(i) Location. All waters of Green Bay, in the vicinity of Menominee Marina, within the arc of a circle with a 1000-foot radius from a fireworks barge in position 45°06′17″ N, 087°35′48″ W (NAD 83).

(ii) Enforcement date and time. Saturday following first Thursday in August; 9 p.m. to 11 p.m.

(60) Ottawa Riverfest Fireworks; Ottawa, IL.

(i) Location. All waters of the Illinois River, at mile 239.7, within the arc of a circle with a 300-foot radius from the fireworks launch site located in position 41°20′29″ N, 088°51′20″ W (NAD 83).

(ii) Enforcement date and time. The first Sunday of August; 9 p.m. to 11 p.m.

(61) Algoma Shanty Days Fireworks; Algoma, WI.

(i) Location. All waters of Lake Michigan and Algoma Harbor within the arc of a circle with a 1000-foot radius from the fireworks launch site located in position 44°36′24″ N, 087°25′54″ W (NAD 83).

(ii) Enforcement date and time. Sunday of the second complete weekend of August; 9 p.m. to 11 p.m.

(62) New Buffalo Fireworks; New Buffalo, MI.

(i) Location. All waters of Lake Michigan and New Buffalo Harbor within the arc of a circle with a 1000-foot radius from the fireworks launch site located in position 41°48′09″ N, 086°44′49″ W (NAD 83).

(ii) Enforcement date and time. Will be enforced on either July 3rd or July 5th from 9 p.m. to 11 p.m.

(63) Pentwater Homecoming Fireworks; Pentwater, MI.

(i) Location. All waters of Lake Michigan and the Pentwater Channel within the arc of a circle with a 1000-foot radius from the fireworks launch site located in position 43°46′56.5″ N, 086°26′38″ W (NAD 83).

(ii) Enforcement date and time. Saturday following the second Thursday of August; 9 p.m. to 11 p.m.

(64) Chicago Air and Water Show; Chicago, IL.

(i) Location. All waters and adjacent shoreline of Lake Michigan and Chicago Harbor bounded by a line drawn from 41°55′54″ N at the shoreline, then east to 41°55′54″ N, 087°37′12″ W, then southeast to 41°54′00″ N, 087°36′00″ W (NAD 83), then southwestward to the northeast corner of the Jardine Water Filtration Plant, then due west to the shore.

(ii) Enforcement date and time. The third Thursday, Friday, Saturday, and Sunday of August; from 9 a.m. to 6 p.m. each day.

(65) Downtown Milwaukee BID 21 Fireworks; Milwaukee, WI. (i) Location. All waters of the Milwaukee River between the Kilbourn Avenue Bridge at 1.7 miles above the Milwaukee Pierhead Light to the State Street Bridge at 1.79 miles above the Milwaukee Pierhead Light.

(ii) Enforcement date and time. The third Thursday of November; 6 p.m. to 8 p.m.

(66) New Years Eve Fireworks; Chicago, IL.

(i) Location. All waters of Monroe Harbor and Lake Michigan within the arc of a circle with a 1000-foot radius from the fireworks launch site located on a barge in position 41°52′41″ N, 087°36′37″ W (NAD 83).

(ii) Enforcement date and time. December 31; 11 p.m. to January 1; 1 a.m.

(67) Cochrane Cup; Blue Island, IL.

(i) Location. All waters of the Calumet Saganashkee Channel from the South Halstead Street Bridge at 41°39′27″ N, 087°38′29″ W; to the Crawford Avenue Bridge at 41°39′05″ N, 087°43′08″ W; and the Little Calumet River from the Ashland Avenue Bridge at 41°39′7″ N, 087°39′38″ W; to the junction of the Calumet Saganashkee Channel at 41°39′23″ N, 087°39′00″ W (NAD 83).

(ii) Enforcement date and time. The first Saturday of May; 6:30 a.m. to 5 p.m.

(68) World War II Beach Invasion Re-enactment; St. Joseph, MI.

(i) Location. All waters of Lake Michigan in the vicinity of Tiscornia Park in St. Joseph, MI beginning at 42°06′55″ N, 086°29′23″ W; then west/northwest along the north breakwater to 42°06′59″ N, 086°29′41″ W; the northwest 100 yards to 42°07′01″ N, 086°29′44″ W; then northeast 2,243 yards to 42°07′50″ N, 086°28′43″ W; the southeast to the shoreline at 42°07′39″ N, 086°28′27″ W; then southwest along the shoreline to the point of origin (NAD 83).

(ii) Enforcement date and time. The last Saturday of June; 8 a.m. to 2 p.m.

(69) Ephraim Fireworks; Ephraim, WI.

(i) Location. All waters of Eagle Harbor and Lake Michigan within the arc of a circle with a 750-foot radius from the fireworks launch site located on a barge in position 45°09′18″ N, 087°10′51″ W (NAD 83).

(ii) Enforcement date and time. The third Saturday of June; 9 p.m. to 11 p.m.

(70) Thunder on the Fox; Elgin, IL.

(i) Location. All waters of the Fox River, near Elgin, Illinois, between Owasco Avenue, located at approximate position 42°03′06″ N, 088°17′28″ W and the Kimball Street bridge, located at approximate position 42°02′31″ N, 088°17′22″ W (NAD 83).

(ii) Enforcement date and time. Friday, Saturday, and Sunday of the third weekend in June; 10 a.m. to 7 p.m. each day

(71) Olde Ellison Bay Days Fireworks Display, Ellison Bay, Wisconsin.

(i) Location. All waters of Lake Michigan, in the vicinity of Ellison Bay Wisconsin, within a 400 foot radius from the fireworks launch site located on a barge in position 45°15′36″ N, 087°05′03″ W (NAD 83).

(ii) Enforcement date and time. The fourth Saturday of June; 9 p.m. to 10 p.m.

(72) Town of Porter Fireworks Display, Porter Indiana.

(i) Location. All waters of Lake Michigan within the arc of a circle with a 1000 foot radius from the fireworks launch site located in position 41°39′56″ N, 087°03′57″ W (NAD 83).

(ii) Enforcement date and time. The first Saturday of July; 8:45 p.m. to 9:30 p.m.

(73) City of Menasha 4th of July Fireworks, Lake Winnebego, Menasha, Wisconsin.

(i) Location. All U.S. navigable waters of Lake Michigan and the Fox River within the arc of a circle with a 800 foot radius from the fireworks launch site at position 41°39′56″ N, 087°03′57″ W (NAD 83).

(ii) Enforcement date and time. July 4; 9 p.m. to 10:30 p.m.

(74) ISAF Nations Cup Grand Final Fireworks Display, Sheboygan, Wisconsin.

(i) *Location.* All waters of Lake Michigan and Sheboygan Harbor, in the vicinity of the south pier in Sheboygan Wisconsin, within a 500 foot radius from the fireworks launch site located on land in position 43°44′55″ N, 087°41′51″ W (NAD 83).

(ii) Enforcement date and time. September 13; 7:45 p.m. to 8:45 p.m.

(75) Magnificent Mile Fireworks Display, Chicago, Illinois.

(i) *Location.* All waters and adjacent shoreline of the Chicago River bounded by the arc of the circle with a 210 foot radius from the fireworks launch site with its center in approximate position of 41°53′21″ N, 087°37′24″ W (NAD 83).

(ii) Enforcement date and time. The third weekend in November; sunset to termination of display.

(b) Definitions. The following definitions apply to this section:

(1) Designated representative means any Coast Guard commissioned, warrant, or petty officer designated by the Captain of the Port, Sector Lake Michigan, to monitor a safety zone, permit entry into a zone, give legally enforceable orders to persons or vessels within a safety zone, and take other actions authorized by the Captain of the Port, Sector Lake Michigan.

(2) Public vessel means a vessel that is owned, chartered, or operated by the United States, or by a State or political subdivision thereof.

(c) Regulations.

(1) The general regulations in 33 CFR 165.23 apply.

(2) All persons and vessels must comply with the instructions of the Captain of the Port, Sector Lake Michigan, or his or her designated representative. Upon being hailed by the U.S. Coast Guard by siren, radio, flashing light or other means, the operator of a vessel shall proceed as directed.

(3) All vessels must obtain permission from the Captain of the Port, Sector Lake Michigan, or his or her designated representative to enter, move within or exit a safety zone established in this section when the safety zone is enforced. Vessels and persons granted permission to enter one of the safety zones listed in this section shall obey all lawful orders or directions of the Captain of the Port, Sector Lake Michigan, or his or her designated representative. While within a safety zone, all vessels shall operate at the minimum speed necessary to maintain a safe course.

(d) Suspension of Enforcement. If the Captain of the Port, Sector Lake Michigan, suspends enforcement of any of these zones earlier than listed in this section, the Captain of the Port, Sector Lake Michigan, or his or her designated representative will notify the public by suspending the respective Broadcast Notice to Mariners.

(e) Exemption. Public vessels, as defined in paragraph (b) of this section, are exempt from the requirements in this section.

(f) Waiver. For any vessel, the Captain of the Port, Sector Lake Michigan, or his or her designated representative may waive any of the requirements of this section, upon finding that operational conditions or other circumstances are

such that application of this section is unnecessary or impractical for the purposes of safety or environmental safety.

Dated: February 2, 2012.

M.W. Sibley,

Captain, U.S. Coast Guard, Captain of the Port Lake Michigan.

[FR Doc. 2012–4390 Filed 2–24–12; 8:45 am]

BILLING CODE 9110–04–P

DEPARTMENT OF HOMELAND SECURITY

Coast Guard

33 CFR Part 165

[Docket No. USCG–2012–0101]

RIN 1625–AA00

Safety Zone; Patapsco River, Northwest and Inner Harbors, Baltimore, MD

AGENCY: Coast Guard, DHS.

ACTION: Notice of proposed rulemaking.

SUMMARY: The Coast Guard proposes to establish a temporary safety zone upon certain waters of the Patapsco River, Northwest Harbor and Inner Harbor during the movement of the historic sloop-of-war USS CONSTELLATION on May 25, 2012. This action is necessary to provide for the safety of life on navigable waters during the tow of the vessel from its berth at the Inner Harbor in Baltimore, Maryland, to a point on the Patapsco River near the Fort McHenry National Monument and Historic Shrine in Baltimore, Maryland, and its return. This action will restrict vessel traffic in portions of the Patapsco River, Northwest Harbor, and Inner Harbor during the event.

DATES: Comments and related material must be received by the Coast Guard on or before March 28, 2012.

ADDRESSES: You may submit comments identified by docket number USCG–2012–0101 using any one of the following methods:

(1) *Federal eRulemaking Portal: http://www.regulations.gov.*

(2) *Fax:* 202–493–2251.

(3) *Mail:* Docket Management Facility (M–30), U.S. Department of Transportation, West Building Ground Floor, Room W12–140, 1200 New Jersey Avenue SE., Washington, DC 20590–0001.

(4) *Hand delivery:* Same as mail address above, between 9 a.m. and 5 p.m., Monday through Friday, except Federal holidays. The telephone number is 202–366–9329.

To avoid duplication, please use only one of these four methods. See the ''Public Participation and Request for Comments'' portion of the **SUPPLEMENTARY INFORMATION** section below for instructions on submitting comments.

FOR FURTHER INFORMATION CONTACT: If you have questions on this proposed rule, call or email Mr. Ronald Houck, Sector Baltimore Waterways Management Division, Coast Guard; telephone 410–576–2674, email *Ronald.L.Houck@uscg.mil.* If you have questions on viewing or submitting material to the docket, call Renee V. Wright, Program Manager, Docket Operations, telephone 202–366–9826.

SUPPLEMENTARY INFORMATION:

Public Participation and Request for Comments

We encourage you to participate in this rulemaking by submitting comments and related materials. All comments received will be posted without change to *http://www.regulations.gov* and will include any personal information you have provided.

Submitting Comments

If you submit a comment, please include the docket number for this rulemaking (USCG–2012–0101), indicate the specific section of this document to which each comment applies, and provide a reason for each suggestion or recommendation. You may submit your comments and material online (via *http://www.regulations.gov*) or by fax, mail, or hand delivery, but please use only one of these means. If you submit a comment online via *www.regulations.gov*, it will be considered received by the Coast Guard when you successfully transmit the comment. If you fax, hand deliver, or mail your comment, it will be considered as having been received by the Coast Guard when it is received at the Docket Management Facility. We recommend that you include your name and a mailing address, an email address, or a telephone number in the body of your document so that we can contact you if we have questions regarding your submission.

To submit your comment online, go to *http://www.regulations.gov,* click on the ''submit a comment'' box, which will then become highlighted in blue. In the ''Document Type'' drop down menu select ''Proposed Rule'' and insert ''USCG–2012–0101'' in the ''Keyword'' box. Click ''Search'' then click on the balloon shape in the ''Actions'' column. If you submit your comments by mail or hand delivery, submit them in an unbound format, no larger than 8½ by 11 inches, suitable for copying and electronic filing. If you submit comments by mail and would like to know that they reached the Facility, please enclose a stamped, self-addressed postcard or envelope. We will consider all comments and material received during the comment period and may change the rule based on your comments.

Viewing Comments and Documents

To view comments, as well as documents mentioned in this preamble as being available in the docket, go to *http://www.regulations.gov*, click on the ''read comments'' box, which will then become highlighted in blue. In the ''Keyword'' box insert ''USCG–2012–0101'' and click ''Search.'' Click the ''Open Docket Folder'' in the ''Actions'' column. You may also visit the Docket Management Facility in Room W12–140 on the ground floor of the Department of Transportation West Building, 1200 New Jersey Avenue SE., Washington, DC 20590, between 9 a.m. and 5 p.m., Monday through Friday, except Federal holidays. We have an agreement with the Department of Transportation to use the Docket Management Facility.

Privacy Act

Anyone can search the electronic form of comments received into any of our dockets by the name of the individual submitting the comment (or signing the comment, if submitted on behalf of an association, business, labor union, etc.). You may review a Privacy Act notice regarding our public dockets in the January 17, 2008, issue of the **Federal Register** (73 FR 3316).

Public Meeting

We do not now plan to hold a public meeting. But you may submit a request for one using one of the four methods specified under **ADDRESSES**. Please explain why you believe a public meeting would be beneficial. If we determine that one would aid this rulemaking, we will hold one at a time and place announced by a later notice in the **Federal Register.**

Basis and Purpose

Historic Ships in Baltimore is planning to conduct a ''turn-around'' ceremony involving the sloop-of-war USS CONSTELLATION in Baltimore, Maryland on May 25, 2012. Planned events include a three-hour, round-trip tow of the USS CONSTELLATION in the Port of Baltimore, consisting of an onboard salute with navy pattern

cannon while the historic vessel is positioned off the Fort McHenry National Monument and Historic Site. Beginning at 3 p.m., the historic Sloop-of-War USS CONSTELLATION will be towed ''dead ship,'' which means that the vessel will be underway without the benefit of mechanical or sail propulsion. The return dead ship tow of the USS CONSTELLATION to its berth in the Inner Harbor is expected to occur immediately upon execution of a tug-assisted turn-around of the USS CONSTELLATION on the Patapsco River near Fort McHenry. The Coast Guard anticipates a large recreational boating fleet during this event, scheduled on a late Friday afternoon during the Memorial Day Holiday weekend in Baltimore, Maryland. Operators should expect significant vessel congestion along the planned route. In the event of inclement weather, the ''turn-around'' will be rescheduled for May 31, 2012.

To address safety concerns during the event, the Captain of the Port Baltimore proposes to establish a safety zone upon certain waters of the Patapsco River, Northwest Harbor and Inner Harbor. The proposed safety zone will help the Coast Guard provide a clear transit route for the participating vessels, and provide a safety buffer around the participating vessels while they are in transit. Due to the need to promote maritime safety and protect participants and the boating public in the Port of Baltimore immediately prior to, during, and after the scheduled event, a safety zone is prudent.

Discussion of Proposed Rule

A permanent safety zone for this proposed rule, with an enforcement period from 2 p.m. through 7 p.m. local time annually on the Friday following Labor Day, has already been published and is detailed at Title 33 Code of Federal Regulations, Section 165.512. Due however to a change in scheduling for this calendar year, this event is planned for Friday, May 25, 2012. The historic sloop-of-war USS CONSTELLATION is scheduled to be towed ''dead ship'' from its berth at Pier 1 in Baltimore's Inner Harbor along a one-way, planned route of approximately four nautical miles, that includes specified waters of the Patapsco River, Northwest Harbor and Inner Harbor to a point on the Patapsco River near Fort McHenry National Monument and Historic Shrine, Baltimore, Maryland. After being turned-around, the USS CONSTELLATION will be returned to its original berth at Pier 1, Inner Harbor, Baltimore, Maryland. Due to the need to safeguard dead ship tow participants and prevent vessels or persons from approaching the USS CONSTELLATION along the intended route immediately prior to, during, and following the scheduled towing evolution, vessel traffic will be restricted on certain waters of the Patapsco River, Northwest Harbor and Inner Harbor.

The Captain of the Port Baltimore is proposing to establish a temporary moving safety zone around the USS CONSTELLATION dead ship tow participants from 2 p.m. through 7 p.m. on May 25, 2012, and, if necessary due to inclement weather, from 2 p.m. through 7 p.m. on May 31, 2012. The proposed regulated area includes all waters within 200 yards ahead of and 100 yards outboard or aft of the historic Sloop-of-War USS CONSTELLATION while operating in the Inner Harbor, the Northwest Harbor and the Patapsco River. Vessels underway at the time this safety zone is implemented will immediately proceed out of the zone. With the exception of USS CONSTELLATION ''turn-around'' participants, entry into this zone is prohibited unless authorized by the Captain of the Port or his designated representative. U.S. Coast Guard patrol vessels will be provided to prevent the movement of persons and vessels in the regulated area. The Captain of the Port Baltimore will issue Broadcast Notices to Mariners to publicize the safety zone and notify the public of changes in the status of the zone. Such notices will continue until the event is complete.

Regulatory Analyses

We developed this proposed rule after considering numerous statutes and executive orders related to rulemaking. Below we summarize our analyses based on 13 of these statutes or executive orders.

Regulatory Planning and Review

This rule is not a significant regulatory action under section 3(f) of Executive Order 12866, Regulatory Planning and Review, as supplemented by Executive Order 13563, Improving Regulation and Regulatory Review, and does not require an assessment of potential costs and benefits under section 6(a)(3) of that Executive Order 12866 or under section 1 of Executive Order 13563. The Office of Management and Budget has not reviewed it under those Orders.

Although this safety zone restricts vessel traffic through the affected area, the effect of this regulation will not be significant due to the limited size and duration that the regulated area will be in effect. In addition, notifications will be made to the maritime community via marine information broadcasts so mariners may adjust their plans accordingly.

Small Entities

Under the Regulatory Flexibility Act (5 U.S.C. 601–612), we have considered whether this proposed rule would have a significant economic impact on a substantial number of small entities. The term ''small entities'' comprises small businesses, not-for-profit organizations that are independently owned and operated and are not dominant in their fields, and governmental jurisdictions with populations of less than 50,000.

The Coast Guard certifies under 5 U.S.C. 605(b) that this proposed rule would not have a significant economic impact on a substantial number of small entities. This proposed rule may affect the following entities, some of which might be small entities: the owners or operators of vessels intending to operate or transit through or within the safety zone during the enforcement period. The safety zone will not have a significant economic impact on a substantial number of small entities for the following reasons. The safety zone is of limited size and duration. Smaller vessels not constrained by their draft, which are more likely to be small entities, may transit around the safety zone. Maritime advisories will be widely available to the maritime community before the effective period.

If you think that your business, organization, or governmental jurisdiction qualifies as a small entity and that this rule would have a significant economic impact on it, please submit a comment (see **ADDRESSES**) explaining why you think it qualifies and how and to what degree this rule would economically affect it.

Assistance for Small Entities

Under section 213(a) of the Small Business Regulatory Enforcement Fairness Act of 1996 (Pub. L. 104–121), we want to assist small entities in understanding this proposed rule so that they can better evaluate its effects on them and participate in the rulemaking. If the rule would affect your small business, organization, or governmental jurisdiction and you have questions concerning its provisions or options for compliance, please contact Mr. Ronald L. Houck, Coast Guard Sector Baltimore, Waterways Management Division, at telephone number 410–576–2674 or email Ronald.L.Houck@uscg.mil. The Coast Guard will not retaliate against small entities that question or complain

about this proposed rule or any policy or action of the Coast Guard.

Collection of Information

This proposed rule would call for no new collection of information under the Paperwork Reduction Act of 1995 (44 U.S.C. 3501–3520.).

Federalism

A rule has implications for federalism under Executive Order 13132, Federalism, if it has a substantial direct effect on State or local governments and would either preempt State law or impose a substantial direct cost of compliance on them. We have analyzed this proposed rule under that Order and have determined that it does not have implications for federalism.

Unfunded Mandates Reform Act

The Unfunded Mandates Reform Act of 1995 (2 U.S.C. 1531–1538) requires Federal agencies to assess the effects of their discretionary regulatory actions. In particular, the Act addresses actions that may result in the expenditure by a State, local, or tribal government, in the aggregate, or by the private sector of $100,000,000 (adjusted for inflation) or more in any one year. Though this proposed rule would not result in such an expenditure, we do discuss the effects of this rule elsewhere in this preamble.

Taking of Private Property

This proposed rule would not cause a taking of private property or otherwise have taking implications under Executive Order 12630, Governmental Actions and Interference with Constitutionally Protected Property Rights.

Civil Justice Reform

This proposed rule meets applicable standards in sections 3(a) and 3(b)(2) of Executive Order 12988, Civil Justice Reform, to minimize litigation, eliminate ambiguity, and reduce burden.

Protection of Children

We have analyzed this proposed rule under Executive Order 13045, Protection of Children from Environmental Health Risks and Safety Risks. This rule is not an economically significant rule and would not create an environmental risk to health or risk to safety that might disproportionately affect children.

Indian Tribal Governments

This proposed rule does not have tribal implications under Executive Order 13175, Consultation and Coordination with Indian Tribal Governments, because it would not have a substantial direct effect on one or more Indian tribes, on the relationship between the Federal Government and Indian tribes, or on the distribution of power and responsibilities between the Federal Government and Indian tribes.

Energy Effects

We have analyzed this proposed rule under Executive Order 13211, Actions Concerning Regulations That Significantly Affect Energy Supply, Distribution, or Use. We have determined that it is not a ''significant energy action'' under that order because it is not a ''significant regulatory action'' under Executive Order 12866 and is not likely to have a significant adverse effect on the supply, distribution, or use of energy. The Administrator of the Office of Information and Regulatory Affairs has not designated it as a significant energy action. Therefore, it does not require a Statement of Energy Effects under Executive Order 13211.

Technical Standards

The National Technology Transfer and Advancement Act (NTTAA) (15 U.S.C. 272 note) directs agencies to use voluntary consensus standards in their regulatory activities unless the agency provides Congress, through the Office of Management and Budget, with an explanation of why using these standards would be inconsistent with applicable law or otherwise impractical. Voluntary consensus standards are technical standards (e.g., specifications of materials, performance, design, or operation; test methods; sampling procedures; and related management systems practices) that are developed or adopted by voluntary consensus standards bodies.

This proposed rule does not use technical standards. Therefore, we did not consider the use of voluntary consensus standards.

Environment

We have analyzed this proposed rule under Department of Homeland Security Management Directive 023–01 and Commandant Instruction M16475.lD, which guide the Coast Guard in complying with the National Environmental Policy Act of 1969 (NEPA)(42 U.S.C. 4321–4370f), and have made a preliminary determination that this action is one of a category of actions that do not individually or cumulatively have a significant effect on the human environment. A preliminary environmental analysis checklist supporting this determination is available in the docket where indicated under **ADDRESSES**. This proposed rule involves establishing a temporary safety zone. We seek any comments or information that may lead to the discovery of a significant environmental impact from this proposed rule.

List of Subjects in 33 CFR Part 165

Harbors, Marine safety, Navigation (water), Reporting and recordkeeping requirements, Security measures, Waterways.

For the reasons discussed in the preamble, the Coast Guard proposes to amends 33 CFR part 165 as follows:

PART 165—REGULATED NAVIGATION AREAS AND LIMITED ACCESS AREAS

1. The authority citation for part 165 continues to read as follows:

Authority: 33 U.S.C. 1231; 46 U.S.C. Chapter 701, 3306, 3703; 50 U.S.C. 191, 195; 33 CFR 1.05–1, 6.04–1, 6.04–6, and 160.5; Pub. L. 107–295, 116 Stat. 2064; Department of Homeland Security Delegation No. 0170.1.

2. Add § 165.T05–0101 to read as follows:

§ 165.T05–0101 Safety Zone; Patapsco River, Northwest and Inner Harbors, Baltimore, MD.

(a) *Regulated area.* The following location is a safety zone: (1) all waters within 200 yards ahead of and 100 yards outboard or aft of the historic Sloop-of-War USS CONSTELLATION while operating in the Inner Harbor, the Northwest Harbor and the Patapsco River.

(b) *Definitions.* As used in this section: (1) ''Captain of the Port Baltimore'' means the Commander, U.S. Coast Guard Sector Baltimore, Maryland.

(2) ''Designated representative'' means any Coast Guard commissioned, warrant, or petty officer who has been authorized by the Captain of the Port Baltimore to assist in enforcing the safety zone described in paragraph (a) of this section.

(3) ''USS CONSTELLATION ''turn-around'' participants'' means the USS CONSTELLATION, its support craft and the accompanying towing vessels.

(c) *Regulations.* The general safety zone regulations found in 33 CFR 165.23 apply to the safety zone created by this temporary section, § 165.T05.0101. (1) All persons are required to comply with the general regulations governing safety zones found in 33 CFR 165.23.

(2) With the exception of USS CONSTELLATION ''turn-around'' participants, entry into or remaining in this zone is prohibited unless authorized by the Coast Guard Captain

of the Port Baltimore. Vessels already at berth, mooring, or anchor at the time the safety zone is implemented do not have to depart the safety zone. All vessels underway within this safety zone at the time it is implemented are to depart the zone.

(3) Persons desiring to transit the area of the safety zone must first request authorization from the Captain of the Port Baltimore or his designated representative. To seek permission to transit the area, the Captain of the Port Baltimore and his designated representatives can be contacted at telephone number 410–576–2693 or on Marine Band Radio, VHF–FM channel 16 (156.8 MHz). The Coast Guard vessels enforcing this section can be contacted on Marine Band Radio, VHF–FM channel 16 (156.8 MHz). Upon being hailed by a U.S. Coast Guard vessel, or other Federal, State, or local agency vessel, by siren, radio, flashing lights, or other means, the operator of a vessel shall proceed as directed. If permission is granted, all persons and vessels must comply with the instructions of the Captain of the Port Baltimore or his designated representative and proceed at the minimum speed necessary to maintain a safe course while within the zone.

(4) *Enforcement.* The U.S. Coast Guard may be assisted in the patrol and enforcement of the zone by Federal, State, and local agencies.

(d) *Enforcement period.* This section will be enforced from 2 p.m. through 7 p.m. on May 25, 2012, and, if necessary due to inclement weather, from 2 p.m. through 7 p.m. on May 31, 2012.

Dated: February 10, 2012.

Mark P. O'Malley,

Captain, U.S. Coast Guard, Captain of the Port Baltimore.

[FR Doc. 2012–4397 Filed 2–24–12; 8:45 am]

BILLING CODE 9110–04–P

POSTAL SERVICE

39 CFR Part 233

Inspection Service Authority; Seizure and Forfeiture

AGENCY: Postal Service™.

ACTION: Proposed rule.

SUMMARY: The Postal Service proposes to revise its regulations with regard to forfeiture authority and proceedings. These new provisions would implement specific requirements in compliance with the Civil Asset Forfeiture Reform Act (CAFRA) of 2000.

DATES: Submit comments on or before March 28, 2012.

ADDRESSES: Mail or deliver written comments to the Postal Inspection Service, Room 3128, 475 L'Enfant Plaza SW., Washington, DC 20260–2100. Written comments may be inspected and photocopied (by appointment only) at the USPS Headquarters Library, 475 L'Enfant Plaza SW., 11th Floor North, Washington, DC, between 9 a.m. and 4 p.m., Monday through Friday. Please call 202–268–2906 to make an appointment. Email comments, containing the name and address of the commenter, may be sent to: *REMattes@uspis.gov* with a subject line of ''CAFRA comments.'' Faxed comments are not accepted.

FOR FURTHER INFORMATION CONTACT: R. Emmett Mattes III, Chief Counsel, U.S. Postal Inspection Service, 202–268–7732.

SUPPLEMENTARY INFORMATION:

I. Overview

First, this rulemaking consolidates the Postal Service's rules and regulations regarding the seizure and forfeiture of property into three sections, 39 CFR 233.7, 233.8, and 233.9 from the previous four sections, 39 CFR 233.7, 233.8, 233.9, and 233.10. The proposed revision consolidates sections 233.8 and 233.9, and treats seizures involving personal use quantities of controlled substances and the expedited release of conveyances being forfeited for a drug-related offense in the same manner. It also incorporates prior section 233.10, Special Notice Provisions, into new paragraph 233.8(f). The new rules also create a new section 233.9 that addresses regulations governing remission or mitigation of administrative, civil, and criminal forfeitures, and incorporates the rules and regulations previously contained in paragraph 233.7(j).

Second, this rulemaking identifies the scope of authority available to the Postal Service to seize property for forfeiture, updates definitions, and provides procedures governing practical issues regarding the seizure, custody, inventory, appraisal, settlement, and release of property subject to forfeiture. See proposed paragraphs 233.7(a)–(g).

Third, the rule proposes conforming the seizure and forfeiture regulations of the Postal Service to address procedural changes necessitated by CAFRA. The rule also incorporates CAFRA's innocent owner defense into the remission regulations. Where CAFRA is silent or ambiguous on a subject relating to administrative forfeiture procedure, the proposed rule interprets CAFRA based on case law and agency expertise and experience.

Fourth, the rule proposes updating the regulations to conform with other authorities and current forfeiture practice. Thus, proposed paragraph 233.7(n) adds a provision to the regulations allowing for the pre-forfeiture disposition of seized property when the property is liable to perish or to waste or to be greatly reduced in value while being held for forfeiture; or when the expense of holding the property is or will be disproportionate to its value. Paragraph 233.7(l) clarifies that administrative and criminal judicial forfeiture proceedings are not mutually exclusive, and paragraph 233.7(r) affirms that the Postal Service is not liable for attorney fees in any administrative forfeiture proceeding. Paragraph 233.7(j)(1)(i)(B) updates the forfeiture regulations by adding the option of publishing notice for administrative forfeitures on an official Government Internet site instead of in a newspaper.

Fifth, the proposed rule amends the designated official provision at paragraph 233.9(a)(2)(A) governing petitions for remission or mitigation of forfeiture, clarifies the existing regulations pertaining to victims, and makes remission available to third parties who reimburse victims under an indemnification agreement.

II. Discussion

A. Consolidation of the Regulations Governing the Seizure and Forfeiture of Property

The proposed rule supersedes prior sections 233.7, 233.8, 233.9, and 233.10 and replaces them with new sections 233.7, 233.8, and 233.9. Section 233.7 contains generally applicable provisions for seizures and forfeitures by the Postal Service. Section 233.8 contains expedited procedures for property seized by the Postal Service for violations involving personal use quantities of a controlled substance, including conveyances. Section 233.9 replaces the prior paragraph 233.7(j), and more clearly defines the rules relevant to remission and mitigation of forfeitures.

B. CAFRA Procedural Changes Incorporated in the Proposed Rule

Section 2 of CAFRA enacted 18 U.S.C. 983, which includes the general rules for civil forfeiture proceedings. This rule proposes to implement certain procedural changes in the conduct of administrative forfeitures as required by 18 U.S.C. 983. These changes address procedures relating to notice of seizure,

filing of claims, hardship requests, and releases of property.

Notice of seizure. Section 983(a)(1) establishes time deadlines and other procedures for the sending of personal written notices of seizures to parties with a potential interest in the property. These time deadlines and procedures are in addition to, and in some respects different from, procedures under the Customs laws. The Customs laws concerning forfeiture procedures (19 U.S.C. 1602–1618), which are incorporated by reference ''insofar as applicable'' in forfeiture statutes enforced by the Postal Service, require that ''[w]ritten notice of seizure together with information on the applicable procedures shall be sent to each party who appears to have an interest in the seized property.'' *See* 19 U.S.C. 1607. CAFRA, as codified at 18 U.S.C. 983(a)(1), requires that notice be sent within 60 days of seizure, or within 90 days of a seizure by a state or local agency, or within 60 days of establishing the interested party's identity if it is not known at the time of seizure. CAFRA also provides that a supervisory official of the seizing agency may grant a single 30-day extension if certain conditions are satisfied and that extensions thereafter may only be granted by a court. Paragraph 233.7(j) of the proposed rule incorporates these notice-related provisions of CAFRA.

Filing of administrative claims. Section 983(a)(2) of title 18 of the United States Code modifies the procedure for filing a claim to seized property. The Customs statute, which was previously applicable to claims in Postal Service forfeitures, provides that, to contest an administrative forfeiture, a claimant has 20 days after the first published notice of seizure to file with the seizing agency both a claim and a cost bond for $5,000 or 10 percent of the property's value, whichever is less, but not less than $250. *See* 19 U.S.C. 1608. Section 983(a)(2) eliminates the cost bond requirement for forfeitures covered by CAFRA and allows the filing of claims not later than the deadline set forth in a personal notice letter. The deadline must be at least 35 days after the date the letter was mailed. Persons not receiving a notice letter must file a claim within 30 days after the date of final publication of notice of seizure. Section 983(a)(2) also adds provisions specifying the information required for a valid claim. It reflects the amendments to 18 U.S.C. 983(a)(2)(C)(ii) in the Paul Coverdell National Forensic Sciences Improvement Act of 2000, Public Law 106–561, 114 Stat. 2787, which retroactively deleted CAFRA's original requirements that claimants provide with their claims documentary evidence supporting their interest in the seized property, and state that their claims are not frivolous. Consequently, pursuant to section 21 of CAFRA (establishing CAFRA's effective date), the amended section 983(a)(2)(C)(ii) applies to any forfeiture proceeding commenced on or after August 23, 2000. Paragraph 233.7(k) of the proposed rule incorporates these section 983(a)(2) changes to the claim procedures.

Release of seized property if forfeiture is not commenced. Paragraph 233.7(p) of the proposed rule provides procedures to implement 18 U.S.C. 983(a)(3). Section 983(a)(3) requires the release of seized property pursuant to regulations promulgated by the Attorney General and prohibits the United States from pursuing further action for civil forfeiture if the United States does not institute judicial forfeiture proceedings against the property within 90 days after an administrative claim has been filed and no extension of time has been obtained from a court.

Hardship request. Paragraph 233.7(m) of the proposed rule implements 18 U.S.C. 983(f), which provides procedures and criteria for the release of seized property (subject to certain exceptions) pending the completion of judicial forfeiture proceedings when a claimant's request for such release establishes that continued Government custody will cause substantial hardship that outweighs the risk that the property will not remain available for forfeiture.

Expedited release of property. Section 233.8 of the proposed rule incorporates and amends, to the extent required by CAFRA, the pre-existing regulations for expedited forfeiture proceedings for certain property. The prior regulations, 39 CFR 233.9, provided expedited procedures for conveyances seized for drug-related offenses and property seized for violations involving personal use quantities of a controlled substance. By repealing 21 U.S.C. 888 (expedited procedures for seized conveyances), CAFRA eliminated the statutory basis for the expedited procedure regulations pertaining to drug-related conveyance seizures. Accordingly, section 233.8 omits provisions applicable to drug-related conveyance seizures. The remaining provisions apply only where property is seized for administrative forfeiture involving controlled substances in personal use quantities.

Remissions and mitigations. For consistency with CAFRA's uniform innocent owner defense, 18 U.S.C. 983(d), the proposed rule incorporates the innocent owner provisions of sections 983(d)(2)(A) and 983(d)(3)(A) in a new 39 CFR 233.9.

Forfeitures affected by CAFRA and the proposed rule. CAFRA's changes apply to civil forfeiture proceedings commenced on or after August 23, 2000, with the exception of civil forfeitures under the following: the Tariff Act of 1930 or any other provision of law codified in title 19; the Internal Revenue Code of 1986; the Federal Food, Drug and Cosmetic Act (21 U.S.C. 301 *et seq.*); the Trading with the Enemy Act (50 U.S.C. App. sec. 1 *et seq.*) or the International Emergency Economic Powers Act (50 U.S.C. 1701 *et seq.*); or Section 1 of title VI of the Act of June 15, 1917 (22 U.S.C. 401).

C. Changes to the Previous Regulations Governing the Seizure and Forfeiture of Property by the Postal Service

Pre-forfeiture disposition. The provision providing for the pre-forfeiture disposition of seized property, paragraph 233.7(n), is needed to implement the authority of 19 U.S.C. 1612(b), one of the procedural Customs statutes incorporated by reference into the forfeiture statutes enforced by the Postal Service. Section 1612(b) authorizes pre-forfeiture disposal of seized property, pursuant to regulations, when the property is liable to perish or to waste or to be greatly reduced in value by keeping, or when the costs of maintaining the property pending forfeiture are disproportionate to the property's value. The proposed rule enables the Postal Service to use the authority of section 1612(b) in appropriate cases.

Internet publication. The proposed rule updates the forfeiture regulations by adding, at paragraph 233.7(j)(1)(i)(B), a provision for the publication of administrative forfeiture notices on the Internet instead of in newspapers. The statute governing the publication of notice in administrative forfeiture proceedings, 19 U.S.C. 1607, does not require a specific means of publication. Paragraph 233.7(j)(1)(i)(B) will provide the Postal Service with the choice to use the Internet as a more effective and less costly alternative to the newspaper publication provided for in paragraph 233.7(j)(1)(i)(A).

This grant of authority parallels a similar one in Rule G(4)(a)(iv)(C) of the Supplemental Rules for Admiralty or Maritime Claims and Asset Forfeiture Actions. Pursuant to Rule G(4)(a)(iv)(C), in all civil judicial forfeitures, the Government may now employ the option of giving public notice through the Internet rather than in a newspaper. Section 233.7(j)(1)(i)(B) will permit the Postal Service likewise to use the

Internet to provide notice in administrative forfeitures, a cost savings that is particularly important as the volume of administrative forfeitures is much greater than judicial forfeitures. There is a strong statistical proof that Internet access is now available to the vast majority of United States residents. Internet access continues to grow, while newspaper circulation is declining; and in some markets, the option to publish in a traditional newspaper may not be available in the next few years.

D. Regulations at 39 CFR 233.9 Governing the Remission or Mitigation of Forfeitures

This proposed rule includes modifications to the regulations governing the remission or mitigation of forfeiture at 39 CFR 233.9. Paragraph 233.9(2)(A), (B) identifies the Chief Counsel of the Postal Inspection Service, or attorneys or managers working under that person's supervision, as the pertinent designated official to whom authority to grant remission and mitigation has been delegated.

Second, the definition of ''victim'' in paragraph 233.9(b) is modified to make remission available to qualified third parties who reimburse a victim pursuant to an indemnification agreement. In addition, paragraph 233.9(h) is modified to specify the procedures applicable to persons seeking remission as victims.

E. Summary of the Impact of the Proposed Changes on the Public

CAFRA enacted additional due process protections for property owners in Federal civil forfeiture proceedings. Section 2(a) of CAFRA, codified at 18 U.S.C. 983, requires prompt notification of administrative forfeiture proceedings. As a general rule, in any administrative forfeiture proceeding under a civil forfeiture statute, the Government must send written notice of the seizure and the Government's intent to forfeit the property to all persons known to the Government who might have an interest in the property within 60 days of a seizure (or 90 days of a seizure made by state or local law enforcement authorities and transferred for Federal forfeiture).

CAFRA also changed the procedure for filing administrative claims. Section 983(a)(2)(B) dictates that when the agency both publishes and sends notice of the seizure and its intent to forfeit the property, an owner who receives notice by mail has 35 days from the date of mailing, and if the personal notice is sent but not received, an owner has 30 days from the date of final publication to file a claim with the agency. In addition, the notice provision in paragraph 233.7(j)(1)(i)(B) was updated to allow the agencies to publish administrative forfeiture notices on the Internet instead of in newspapers, consistent with the procedure for civil judicial forfeitures under Rule G(4)(a)(iv)(C).

The filing of a valid claim compels the agency to refer the matter to the U.S. Attorney. To preserve the option to seek civil judicial forfeiture, the U.S. Attorney must do one of the following within 90 days: (1) Commence a civil judicial forfeiture action against the seized property; (2) obtain an indictment alleging the property is subject to criminal forfeiture; (3) obtain a good cause extension of the deadline from the district court; or (4) return the property pending the filing of a complaint. If the Government fails to take any of these steps within the statutory deadline, it must promptly release the property and is barred from taking any further action to civilly forfeit the property in connection with the underlying offense.

Prior to CAFRA, claims in an administrative forfeiture required an accompanying bond of either $5,000 or 10 percent of the value of the seized property, whichever was lower. Section 983(a)(2) eliminated the bond requirement to give the property owner greater access to Federal court. However, to prevent frivolous claims, CAFRA requires the claimant to state the basis for that person's interest in the property in the claim under oath.

Under CAFRA, claimants also have a right to petition for immediate release of seized property on grounds of hardship with a 30-day deadline on judicial resolution of such petitions. Section 983(f)(7) provides that if the court grants a petition, it may also enter any order necessary to ensure that the value of the property is maintained during the pendency of the forfeiture action, including permitting inspection, photographing, and inventory of the property, fixing a bond pursuant to Rule E(5) of the Supplemental Rules for Admiralty or Maritime Claims and Asset Forfeiture Actions, or requiring the claimant to obtain or maintain insurance on the property. It also provides that the Government may place a lien or file a *lis pendens* on the property.

It is important to note that CAFRA's deadlines apply only to civil forfeiture actions initiated by commencement of an administrative proceeding under section 983(a) and do not apply to actions commenced solely as civil judicial forfeitures. However, the vast majority of civil forfeitures are handled administratively.

CAFRA changed the procedures for the expedited release of property for conveyances and property seized for drug offenses to apply only where property is seized for administrative forfeiture involving personal use quantities of a controlled substance.

Although CAFRA enacted a provision granting attorney fees to substantially prevailing parties in civil judicial forfeitures, the regulations make it clear that the Postal Service is not liable for attorney fees or costs in administrative forfeiture proceedings, even if the matter is referred to the U.S. Attorney and the U.S. Attorney declines to initiate a judicial forfeiture on the property.

In addition to implementing these CAFRA reforms, the new regulations allow the Postal Service to sell property that is deteriorating rapidly in order to preserve the property's value pending resolution of the forfeiture. This disposition must be authorized by agency headquarters. The regulations also specify that the seizing agency must promptly deposit any seized U.S. currency over $5,000 into the Hold Account—Seizure and Forfeiture under the control of the Postal Inspection Service pending forfeiture. The only exception is for currency that must be retained because it has a significant, independent, tangible evidentiary purpose.

The new rule changes some of the procedures relating to crime victims. The definition of victim is modified to make remission available to qualified third parties who reimburse a victim pursuant to an insurance or other indemnification agreement. *See* proposed paragraph 233.9(b)(23). In addition, paragraph 233.9(h) is reorganized and a new paragraph (h)(1) is added to specify the filing procedures applicable to persons seeking remission as victims. This revision is necessary because the current petition filing procedures in paragraph 233.7(j) are applicable to owners and lienholders, but not to victims. Paragraph 233.9(h)(9) clarifies that the amount of compensation available to a particular victim may not exceed the victim's share of the net proceeds of the forfeiture associated with the activity that caused the victim's loss. In other words, a victim is not entitled to full compensation, but only the amount of compensation available from the forfeited property. Also, the new rule makes the statutory innocent owner provisions at 18 U.S.C. 983(d)(2)(A) and (d)(3)(A) applicable to all owner and lienholder petitions for remission.

List of Subjects in 39 CFR Part 233

Administrative practice and procedure, Crime, Law enforcement, Penalties, Privacy.

Accordingly, for the reasons stated, the Postal Service proposes to amend 39 CFR Part 233 as follows:

PART 233—INSPECTION SERVICE AUTHORITY

1. The authority citation for 39 CFR Part 233 is revised to read as follows:

Authority: 39 U.S.C. 101, 102, 202, 204, 401, 402, 403, 404, 406, 410, 411, 1003, 3005(e)(1); 12 U.S.C. 3401–3422; 18 U.S.C. 981, 983, 1956, 1957, 2254, 3061; 21 U.S.C. 881; Omnibus Budget Reconciliation Act of 1996, sec. 662 (Pub. L. 104–208).

2. Section 233.7 is revised to read as follows:

§ 233.7 Forfeiture authority and procedures.

(a) *Scope of Regulations.*

(1) These regulations apply to all forfeitures administered by the United States Postal Service with the exception of seizures and forfeitures under the statutes listed in 18 U.S.C. 983(i). The authority to conduct administrative forfeitures derives from the procedural provisions of the Customs laws (19 U.S.C. 1602–1618) where those provisions are incorporated by reference in the substantive forfeiture statutes.

(2) These regulations will apply to all forfeiture actions commenced on or after [EFFECTIVE DATE].

(b) Designation of officials having administrative forfeiture authority—

(1) *Administrative forfeiture authority.* The Chief Postal Inspector is authorized to conduct administrative forfeitures under the statutes identified in paragraph (2) of this section, following, where applicable, the procedures provided by the customs laws of the United States (19 U.S.C. 1602–1618) and to pay valid liens and mortgages against property that has been so forfeited.

(2) *Authority of the Chief Postal Inspector.* The Chief Postal Inspector is authorized to perform all duties and responsibilities necessary on behalf of the Postal Service and the Office of Inspector General to enforce 18 U.S.C. 981, 983, 2254; 21 U.S.C. 863(c), 881; and 31 U.S.C. 5317; following, where applicable, the procedures provided by the Customs laws of the United States (19 U.S.C. 1602–1618), and to pay valid liens and mortgages against property that has been so forfeited. The Chief Postal Inspector is authorized to delegate all or any part of this authority to Deputy Chief Inspectors, Inspectors in Charge, and Inspectors of the Postal Inspection Service, and to issue such instructions as may be necessary to carry out this authority.

(3) *State adoption.* The seizure of property by a state or local law enforcement agency or other entity or individual may be adopted for forfeiture by the Postal Inspection Service, as appropriate under its seizure authority pursuant to subparagraphs (1) and (2).

(c) Definitions. As used in this section, the following terms shall have the meanings specified:

(1) *Administrative forfeiture* means the process by which property may be forfeited by the Postal Inspection Service rather than through judicial proceedings. Administrative forfeiture has the same meaning as nonjudicial forfeiture, as that term is used in 18 U.S.C. 983.

(2) *Appraised value* means the estimated market value of property at the time and place of seizure if such or similar property was freely offered for sale between a willing seller and a willing buyer.

(3) *Appropriate official* means the Chief Postal Inspector or that person's designee, or where the term ''appropriate official'' means the office or official identified in the notice published or personal written notice in accordance with 233.7(j).

(4) *Contraband* means:

(i) Any controlled substance, hazardous raw material, equipment or container, plants, or other property subject to summary forfeiture pursuant to sections 511(f) or (g) of the Controlled Substances Act (21 U.S.C. 881(f) or (g)); or

(ii) Any controlled substance imported into the United States, or exported out of the United States, in violation of law.

(5) *Civil forfeiture proceeding* means a civil judicial forfeiture action as that term is used in 18 U.S.C. 983.

(6) *Domestic value* means the same as the term *appraised value* as defined in paragraph 233.7(c)(2).

(7) *Expense* means all costs incurred to detain, inventory, safeguard, maintain, advertise, sell, or dispose of property under seizure, detained, or forfeited pursuant to any law.

(8) *File or filed* has the following meanings:

(i) A claim or any other document submitted in an administrative forfeiture proceeding is not deemed filed until actually received by the appropriate official identified in the personal written notice and the published notice specified in paragraph 233.7(i). A claim is not considered filed if it is received by any other office or official. In addition, a claim in an administrative forfeiture proceeding is not considered filed if received only by an electronic or facsimile transmission.

(ii) For purposes of computing the start of the 90-day period set forth in 18 U.S.C. 983(a)(3), an administrative forfeiture claim is filed on the date when the claim is received by the designated official, even if the claim is received from an incarcerated *pro se* prisoner.

(9) *Interested party* means any person who reasonably appears to have an interest in the property, based on the facts known to the Postal Inspection Service before a declaration of forfeiture is entered.

(10) *Judicial forfeiture* means either a civil or a criminal proceeding in a United States District Court that may result in a final judgment and order of forfeiture.

(11) *Mail* includes regular or certified U.S. mail, and mail and package transportation and delivery services provided by other private or commercial interstate carriers.

(12) *Nonjudicial forfeiture* has the same meaning as administrative forfeiture. See paragraph 233.7(b)(1).

(13) *Person* means an individual, partnership, corporation, joint business enterprise, estate, or other legal entity capable of owning property.

(14) *Property subject to administrative forfeiture* means any personal property of the kinds described in 19 U.S.C. 1607(a)(1)(4).

(15) *Property subject to forfeiture* refers to all property that Federal law authorizes to be forfeited to the United States of America in any administrative forfeiture proceeding, in any civil judicial forfeiture proceeding, or in any criminal forfeiture proceeding.

(d) *Seizing property subject to forfeiture*—(1) *Authority to seize property.* Postal Inspectors may seize assets under any Federal statute over which the Postal Inspection Service has investigative or forfeiture jurisdiction.

(2) *Turnover of assets seized by state and local agencies.*

(i) Property that is seized by a state or local law enforcement agency and transferred to the Postal Inspection Service for administrative or civil forfeiture may be adopted for administrative forfeiture without the issuance of any Federal seizure warrant or other Federal judicial process.

(ii) Where a state or local law enforcement agency maintains custody of property pursuant to process issued by a state or local judicial authority, and notifies the Postal Inspection Service of the impending release of such property, the Postal Inspection Service may seek and obtain a Federal seizure warrant in

anticipation of a state or local judicial authority releasing the asset from state process for purposes of Federal seizure, and may execute such seizure warrant when the state or local law enforcement agency releases the property as allowed or directed by its judicial authority.

(e) *Inventory.* The Postal Inspection Service shall prepare an inventory of any seized property.

(f) *Custody.*

(1) All property seized by Postal Inspectors for forfeiture shall be delivered to the custody of the U.S. Marshals Service, or custodian approved by the U.S. Marshals Service, as soon as possible after seizure, unless it is retained as evidence.

(2) Seized U.S. currency (and to the extent practicable seized foreign currency and negotiable instruments) must be deposited promptly in the Holding Account—Seizure and Forfeiture under the control of the Postal Inspection Service pending forfeiture. Provisional exceptions to this requirement may be granted as follows:

(i) If the seized currency has a value less than $5,000, and a supervisory official within the U.S. Attorney's Office determines in writing that the currency is reasonably likely to serve a significant, independent, tangible, evidentiary purpose, or that retention is necessary while the potential evidentiary significance of the currency is being determined by scientific testing or otherwise, or

(ii) The seized currency has a value greater than $5,000, and the Chief, Asset Forfeiture Money Laundering Section (AFMLS) determines in writing that the currency is reasonably likely to serve a significant, independent, tangible, evidentiary purpose, or that retention is necessary while the potential evidentiary significance of the currency is being determined by scientific testing or otherwise.

(3) Seized currency has a *significant independent, evidentiary purpose* as those terms are used in 2(i) and 2(ii) of this paragraph if, for example, it bears fingerprint evidence, is packaged in an incriminating fashion, or contains a traceable amount of narcotic residue or some other substance of evidentiary significance. If only a portion of the seized currency has evidentiary value, only that portion should be retained; the balance should be deposited.

(g) *Appraisal.* The Postal Inspection Service shall determine the domestic value of the seized property as soon as practicable following seizure.

(h) *Release before claim.*

(1) After seizure for forfeiture and prior to the filing of any claim, the appropriate official is authorized to release property seized for forfeiture provided:

(i) The property is not contraband, evidence of a violation of law, or any property, the possession of which by the claimant, petitioner, or the person from who it was seized is prohibited by state or Federal law, and does not have a design or other characteristic that particularly suits it for use in illegal activities; and

(ii) The appropriate official determines within 10 days of seizure that there is an innocent party with the right to immediate possession of the property or that the release would be in the best interest of justice or the Government.

(2) Further, at any time after seizure and before any claim is filed, such seized property may be released if the appropriate official determines that there is an innocent party with the right to immediate possession of the property or that the release would be in the best interest of justice or the Government.

(i) *Commencing an Administrative Forfeiture.* An administrative forfeiture proceeding begins when notice is first published in accordance with paragraph 233.7(i)(1), or the first personal written notice is sent in accordance with paragraph 233.7(i)(2), whichever occurs first.

(j) *Notice of administrative forfeiture*—(1) Notice by publication.

(i) After seizing property subject to administrative forfeiture, the Appropriate Official shall select from the following options a means of publication reasonably calculated to notify potential claimants of the seizure and intent to forfeit and sell or otherwise dispose of the property:

(A) Publication once each week for at least three successive weeks in a newspaper generally circulated in the judicial district where the property was seized; or

(B) Posting a notice on an official Government Internet site for at least 30 consecutive days.

(ii) The published notice shall:

(A) Describe the seized property;

(B) State the date, statutory basis, and place of seizure;

(C) State the deadline for filing a claim when personal written notice has not been received, at least 30 days after the date of final publication of the notice of seizure; and

(D) State the identity of the appropriate official of the Postal Inspection Service and address where the claim must be filed.

(2) *Personal written notice*—(i) *Manner of providing notice.* After seizing property subject to administrative forfeiture, the Postal Inspection Service, in addition to publishing notice, shall send personal written notice of the seizure to each interested party in a manner reasonably calculated to reach such parties.

(ii) *Content of personal written notice.* The personal written notice sent by the Postal Inspection Service shall:

(A) State the date when the personal written notice is sent;

(B) State the deadline for filing a claim, at least 35 days after the personal written notice is sent;

(C) State the date, statutory basis, and place of seizure;

(D) State the identity of the appropriate official of the Postal Inspection Service and the address where the claim must be filed; and

(E) Describe the seized property.

(3) *Timing of notice*—(i) *Date of personal notice.* Personal written notice is sent on the date when the Postal Inspection Service causes it to be placed in the mail, or otherwise sent by means reasonably calculated to reach the interested party. The personal written notice required by 233.7(i)(2) shall be sent as soon as practicable, and in no case more than 60 days after the date of seizure (or 90 days after the date of seizure by a state or local law enforcement agency if the property was turned over to the Postal Inspection Service for the purpose of forfeiture under Federal law).

(ii) *Civil Judicial Forfeiture.* If, before the time period for sending notice expires, the Government files a civil judicial forfeiture action against the seized property and provides notice of such action as required by law, personal notice of administrative forfeiture is not required under this paragraph.

(iii) *Criminal indictment.* If, before the time period for sending notice under this paragraph expires, no civil judicial forfeiture action is filed, but a criminal indictment or information is obtained containing an allegation that the property is subject to forfeiture, the seizing agency shall either:

(A) Send timely personal written notice and continue the administrative forfeiture proceeding; or

(B) After consulting with the U.S. Attorney, terminate the administrative forfeiture proceeding and notify the custodian to return the property to the person having the right to immediate possession unless the U.S. Attorney takes steps necessary to maintain custody of the property as provided in the applicable criminal forfeiture statute.

(4) *Subsequent Federal seizure.* If property is seized by a state or local law enforcement agency, but personal written notice is not sent to the person

from whom the property is seized within the time period for providing notice under paragraph 3(i), then any administrative forfeiture proceeding against the property may commence if:

(i) The property is subsequently seized or restrained by the Postal Inspection Service pursuant to a Federal seizure warrant or restraining order and the Postal Inspection Service sends notice as soon as practicable, and in no case more than 60 days after the date of the Federal seizure; or

(ii) The owner of the property consents to forfeiture of the property.

(5) *Tolling.*

(i) In states or localities where orders are obtained from a state court authorizing the turnover of seized assets to the Postal Inspection Service, the period from the date an application or motion is presented to the state court for the turnover order through the date when such order is issued by the court shall not be included in the time period for providing notice under paragraph 3(i).

(ii) If property is detained at an international border or port of entry for the purpose of examination, testing, inspection, obtaining documentation, or other investigation relating to the importation of the property into, or the exportation of the property from the United States, such period of detention shall not be included in the period described in paragraph 3(i). In such cases, the 60-day period shall begin to run when the period of detention ends, if a seizing agency seizes the property for the purpose of forfeiture to the United States.

(6) *Identity of interested party.* If the Postal Inspection Service determines the identity or interest of an interested party after the seizure or adoption of the property, but before entering a declaration of forfeiture, the Postal Inspection Service shall send written notice to such interested party under paragraph 3(i) not later than 60 days after determining the identity of the interested party or the interested party's interest.

(7) *Extending deadline for notice.* The Chief Counsel for the Postal Inspection Service may extend the period for sending personal written notice under these regulations in a particular case for a period not to exceed 30 days (which period may not be further extended except by a court pursuant to 18 U.S.C. 983(a)(1)(C), (D)), if the Chief Counsel for the Postal Inspection Service determines, and states in writing, that there is reason to believe that notice may have an adverse result, including: endangering the life or physical safety of an individual; flight from prosecution; destruction of or tampering with evidence; intimidation of potential witnesses; or otherwise seriously jeopardizing an investigation, or unduly delaying a trial.

(8) *Certification.* The Chief Counsel for the Postal Inspection Service shall provide the written certification required under 18 U.S.C. 983(a)(1)(C) when the Government requests it and the conditions described in 18 U.S.C. 983(a)(1)(D) are present.

(k) *Claims*—(1) *Filing.* In order to contest the forfeiture of seized property in Federal court, any person asserting an interest in seized property subject to an administrative forfeiture proceeding under these regulations must file a claim with the appropriate official, after the commencement of the administrative forfeiture proceeding as defined in paragraph 233.7(h), and not later than the deadline set forth in a personal notice letter sent pursuant to paragraph 233.7(i)(2). If personal written notice is sent but not received, then the intended recipient must file a claim with the appropriate official not later than 30 days after the date of the final publication of the notice of seizure.

(2) *Contents of claim.* A claim shall:

(i) Identify the specific property being claimed;

(ii) Identify the claimant and state the claimant's interest in the property; and

(iii) Be made under oath by the claimant, not counsel for the claimant, and recite that it is made under the penalty of perjury, consistent with the requirements of 28 U.S.C. 1746. An acknowledgement, attestation, or certification by a notary public alone is insufficient.

(3) *Availability of claim forms.* The claim need not be made in any particular form. However, the Postal Inspection Service will make claim forms generally available on request. Such forms shall be written in easily understandable language. A request for a claim form does not extend the deadline for filing a claim. Any person may obtain a claim form by requesting one in writing from the appropriate official.

(4) *Cost bond not required.* Any person may file a claim under paragraph 233.7(k)(1) without posting bond, except in forfeitures under statutes listed in 18 U.S.C. 983(i).

(5) *Referral of claim.* Upon receipt of a claim that meets the requirements of paragraphs (1) and (2), the Postal Inspection Service shall return the property or suspend the administrative forfeiture proceeding and promptly transmit the claim, together with a description of the property and a complete statement of the facts and circumstances surrounding the seizure, to the appropriate U.S. Attorney for commencement of judicial forfeiture proceedings. Upon making the determination that the seized property will be released, the Postal Inspection Service shall promptly notify the person with a right to immediate possession of the property, informing that person to contact the property custodian within a specified period for release of the property, and further informing that person that failure to contact the property custodian within the specified period for release of the property will result in abandonment of the property pursuant to applicable regulations. The Postal Inspection Service shall notify the property custodian of the identity of the person to whom the property should be released. The property custodian shall have the right to require presentation of proper identification and/or to take other steps to verify the identity of the person who seeks the release of property, or both.

(6) *Premature filing.* If a claim is filed with the appropriate official after the seizure of the property, but before the commencement of the administrative forfeiture proceeding as defined in paragraph 233.7(i), the claim shall be deemed filed on the 30th day after the commencement of the administrative forfeiture proceeding. If such claim meets the requirements of paragraph (k)(2), the Postal Inspection Service shall suspend the administrative forfeiture proceedings and promptly transmit the claim, together with a description of the property and a complete statement of the facts and circumstances surrounding the seizure to the appropriate U.S. Attorney for commencement of judicial forfeiture proceedings.

(7) *Defective claims.* If the Postal Inspection Service determines that an otherwise timely claim does not meet the requirements of paragraph (k)(2), the Postal Inspection Service may notify the claimant of this determination and allow the claimant a reasonable time to cure the defect(s) in the claim. If, within the time allowed by the Postal Inspection Service, the requirements of paragraph (k)(2) are not met, the claim shall be void and the forfeiture proceedings shall proceed as if no claim had been submitted. If the claimant timely cures the deficiency, then the claim shall be deemed filed on the date when the appropriate official receives the cured claim.

(l) *Interplay of administrative and criminal judicial forfeiture proceedings.* An administrative forfeiture proceeding pending against seized or restrained property does not bar the Government

from alleging that the same property is forfeitable in a criminal case. Notwithstanding the fact that an allegation of forfeiture has been included in a criminal indictment or information, the property may be administratively forfeited in a parallel proceeding.

(m) *Requests for hardship release of seized property.*

(1) Under certain circumstances, a claimant may be entitled to immediate release of seized property on the basis of hardship.

(2) Any person filing a request for hardship release must also file a claim to the seized property pursuant to paragraph 233.7(k) and as defined in 18 U.S.C. 983(a).

(3) The timely filing of a valid claim pursuant to paragraph 233.7(k) does not entitle the claimant to possession of the seized property, but a claimant may request immediate release of the property while forfeiture is pending, based on hardship.

(4) A claimant seeking release of property under 18 U.S.C. 983(f) and these regulations must file a written request with the appropriate official. The request must establish that:

(i) The claimant has a possessory interest in the property;

(ii) The claimant has sufficient ties to the community to provide assurance that the property will be available at the time of trial;

(iii) The continued possession by the Government pending the final disposition of forfeiture proceedings will cause substantial hardship to the claimant, such as preventing the functioning of a business, preventing an individual from working, or leaving an individual homeless;

(iv) The claimant's likely hardship from the continued possession by the Government of the seized property outweighs the risk that the property will be destroyed, damaged, lost, concealed, or transferred if it is returned to the claimant during the pendency of the proceeding; and

(v) The property is not:

(A) Contraband, any property, the possession of which by the claimant, petitioner, or person from whom it was seized is prohibited by state or Federal law, currency, or other monetary instrument, or electronic funds unless such currency or other monetary instrument or electronic funds constitutes the assets of a legitimate business which has been seized;

(B) Intended to be used as evidence of a violation of law;

(C) By reason of design or other characteristic, particularly suited for use in illegal activities; or

(D) Likely to be used to commit additional criminal acts if returned to the claimant.

(5) A hardship release request pursuant to this paragraph shall be deemed to have been made on the date when it is received by the appropriate official as defined in paragraph 233.7(c)(3), or the date the claim was deemed filed under paragraph 233.7(k). If the request is ruled on and denied by the appropriate official or the property has not been released within the 15-day time limit period, the claimant may file a petition in Federal district court pursuant to 18 U.S.C. 983(f)(3). If a petition is filed in Federal district court, the claimant must send a copy of the petition to the appropriate official to whom the hardship petition was originally submitted and to the U.S. Attorney in the judicial district where the judicial petition was filed.

(6) If a civil forfeiture complaint is filed on property and the claimant files a claim with the court pursuant to 18 U.S.C. 983(a)(4)(A) and Rule G(5) of the Supplemental Rules for Certain Admiralty and Maritime Claims, a hardship petition may be submitted to the individual identified in the public or personal notice of the civil forfeiture action.

(n) *Disposition of property before forfeiture.*

(1) Whenever it appears to the Postal Inspection Service that any seized property is liable to perish or to waste, or to be greatly reduced in value during its detention for forfeiture, or that the expense of keeping the property is or will be disproportionate to its value, the Chief Counsel for the Postal Inspection Service may order destruction, sale, or other disposition of such property prior to forfeiture. In addition, the owner may obtain release of the property by posting a substitute monetary amount with the Postal Inspection Service to be held subject to forfeiture proceedings in place of the seized property to be released. Upon approval by the Chief Counsel for the Postal Inspection Service, the property will be released to the owner upon the payment of an amount equal to the Government appraised value of the property if the property is not evidence of a violation of law, is not contraband, and has no design or other characteristics that particularly suit it for use in illegal activities. This payment must be in the form of a money order, an official bank check, or a cashier's check made payable to the Postal Inspection Service. A bond in the form of a cashier's check or official bank check will be considered as paid once the check has been accepted for payment by the financial institution that issued the check. If a substitute amount is posted and the property is administratively forfeited, the Postal Inspection Service will forfeit the substitute amount in lieu of the property. The pre-forfeiture destruction, sale, or other disposition of seized property pursuant to this subsection shall not extinguish any person's rights to the value of the property under applicable law. The authority vested in the Chief Counsel for the Postal Inspection Service under this subsection may not be delegated.

(2) The Postal Inspection Service shall commence forfeiture proceedings, regardless of the disposition of the property under this paragraph. A person with an interest in the property that was destroyed or otherwise disposed of under this paragraph may file a claim to contest the forfeiture of the property or a petition for remission or mitigation of the forfeiture. No employee of the Postal Inspection Service shall be liable for the destruction or other disposition of property made pursuant to this paragraph. The destruction or other disposition of the property does not impair *in rem* jurisdiction.

(o) *Declaration of administrative forfeiture.* If the Postal Inspection Service commences a timely proceeding against property subject to administrative forfeiture, and no valid and timely claim is filed, the appropriate official shall declare the property forfeited. The declaration of forfeiture shall have the same force and effect as a final decree and order of forfeiture in a Federal judicial forfeiture proceeding.

(p) *Return of property.*

(1) If, under 18 U.S.C. 983(a)(3), the Postal Inspection Service is notified by the U.S. Attorney in charge of the matter that the 90-day deadline was not met, the Postal Inspection Service is required to release the seized property. Under this subsection, the Postal Inspection Service is not required to return property for which it has an independent basis for continued custody including, but not limited to, contraband or evidence of a violation of law.

(2) Upon becoming aware that the seized property must be released, the Postal Inspection Service shall promptly notify the person with a right to immediate possession of the property, informing that person to contact the property custodian within a specified period for release of the property, and further informing that person that failure to contact the property custodian within the specified period for release of the property may result in the initiation of abandonment proceedings against the

property pursuant to 39 CFR 946, et seq. The property custodian will be notified of the identity of the person to whom the property should be released.

(3) The property custodian shall have the right to require presentation of proper identification or to verify the identity of the person who seeks the release of property.

(q) *Disposition of forfeited property.*

(1) Whenever property is forfeited administratively, the Postal Inspection Service may:

(i) Retain the property for official use;

(ii) Transfer ownership of the property to any Federal, state or local law enforcement agency that participated in the investigation leading to the forfeiture;

(iii) Sell any property that is not required to be destroyed by law and that is not harmful to the public;

(iv) Destroy the property; or

(v) Dispose of the property as otherwise permitted by law.

(2) If the laws of a state in which an article of forfeited property is located prohibit the sale or possession of such property, or if the Postal Service and the Marshals Service are of the opinion that it would be more advantageous to sell the forfeited property in another district, the property may be moved to and sold in such other district.

(r) *Attorney fees and costs.* The Postal Inspection Service is not liable for attorney fees or costs in any administrative forfeiture proceeding, including such proceedings in which a claim is filed, the matter is referred to the U.S. Attorney, and the U.S. Attorney declines to commence judicial forfeiture proceedings.

3. Section 233.8 is revised to read as follows:

§ 233.8 Expedited Forfeiture Proceedings for Property Seizures Based on Violations Involving the Possession of Personal Use Quantities of a Controlled Substance.

(a) *Purpose and scope.*

(1) The following definitions, regulations, and criteria are designed to establish and implement procedures required by section 6079 of the Anti-Drug Abuse Act of 1988, Public Law 100–690, 102 Stat. 4181. They are intended to supplement existing law and procedures relative to the forfeiture of property under the identified statutory authority. These regulations do not affect the existing legal and equitable rights and remedies of those with an interest in property seized for forfeiture, nor do these provisions relieve interested parties from their existing obligations and responsibilities in pursuing their interests through such courses of action. These regulations are intended to reflect the intent of Congress to minimize the adverse impact on those entitled to legal or equitable relief occasioned by the prolonged detention of property subject to forfeiture due to violations of law involving personal use quantities of controlled substances. The definition of personal use quantities of a controlled substance as contained herein is intended to distinguish between those small quantities, which are generally considered to be possessed for personal consumption and not for further distribution, and those larger quantities generally considered to be subject to further distribution.

(2) In this regard, for violations involving the possession of personal use quantities of a controlled substance, section 6079(b)(2) requires either that administrative forfeiture be completed within 21 days of the seizure of the property, or alternatively, that procedures are established that provide a means by which an individual entitled to relief may initiate an expedited administrative review of the legal and factual basis of the seizure for forfeiture. Should an individual request relief pursuant to these regulations and be entitled to the return of the seized property, such property shall be returned immediately following that determination, but not later than 20 days after filing of a petition for expedited release by an owner, and the administrative forfeiture process shall cease. Should the individual not be entitled to the return of the seized property, however, the administrative forfeiture of that property shall proceed. The owner may, in any event, obtain release of property pending the administrative forfeiture by submitting to the agency making the determination property sufficient to preserve the Government's vested interest for purposes of the administrative forfeiture.

(b) *Definitions.* As used in this section, the following terms shall have the meanings specified:

(1) *Commercial fishing industry vessel* means a vessel that:

(i) Commercially engages in the catching, taking, or harvesting of fish or an activity that can reasonably be expected to result in the catching, taking, or harvesting of fish;

(ii) Commercially prepares fish or fish products other than by gutting, decapitating, gilling, skinning, shucking, icing, freezing, or brine chilling; or

(iii) Commercially supplies, stores, refrigerates, or transports fish, fish products, or materials directly related to fishing or the preparation of fish to or from a fishing, fish processing, or fish tender vessel or fish processing facility.

(2) *Controlled substance* has the meaning given in 21 U.S.C. 802(6).

(3) *Normal and customary manner* means that inquiry suggested by particular facts and circumstances that would customarily be undertaken by a reasonably prudent individual in a like or similar situation. Actual knowledge of such facts and circumstances is unnecessary, and implied, imputed, or constructive knowledge is sufficient. An established norm, standard, or custom is persuasive but not conclusive or controlling in determining whether an owner acted in a normal and customary manner to ascertain how property would be used by another legally in possession of the property. The failure to act in a normal and customary manner as defined herein will result in the denial of a petition for expedited release of the property and is intended to have the desirable effect of inducing owners of the property to exercise greater care in transferring possession of their property.

(4) *Owner* means one having a legal and possessory interest in the property seized for forfeiture. Even though one may hold primary and direct title to the property seized, such person may not have sufficient actual beneficial interest in the property to support a petition as owner if the facts indicate that another person had dominion and control over the property.

(5) *Personal use quantities* means those amounts of controlled substances in possession in circumstances where there is no other evidence of an intent to distribute, or to facilitate the manufacturing, compounding, processing, delivering, importing, or exporting of any controlled substance.

(i) Evidence that possession of quantities of a controlled substance is for other than personal use may include, for example:

(A) Evidence, such as drug scales, drug distribution paraphernalia, drug records, drug packaging material, method of drug packaging, drug ''cutting'' agents and other equipment, that indicates an intent to process, package, or distribute a controlled substance;

(B) Information from reliable sources indicating possession of a controlled substance with intent to distribute;

(C) The arrest or conviction record of the person or persons in actual or constructive possession of the controlled substance for offenses under Federal, state, or local law that indicates an intent to distribute a controlled substance;

(D) Circumstances or reliable information indicating that the controlled substance is related to large amounts of cash or any amount of prerecorded Government funds;

(E) Circumstances or reliable information indicating that the controlled substance is a sample intended for distribution in anticipation of a transaction involving large quantities, or is part of a larger delivery;

(F) Statements by the possessor, or otherwise attributable to the possessor, including statements of conspirators, that indicate possession with intent to distribute; or

(G) The fact that the controlled substance was recovered from sweepings.

(ii) Possession of a controlled substance shall be presumed to be for personal use when there are no indicia of illicit drug trafficking or distribution—such as, but not limited to, the factors listed above—and the amounts do not exceed the following quantities:

(A) One gram of a mixture or substance containing a detectable amount of heroin;

(B) One gram of a mixture or substance containing a detectable amount of the following:

(*1*) Coca leaves, except coca leaves and extracts of coca leaves from which cocaine, ecgonine, and derivations of ecgonine or their salts have been removed;

(*2*) Cocaine, its salts, optical and geometric isomers, and salts of isomers;

(*3*) Ecgonine, its derivatives, their salts, isomers, and salts of isomers; or

(*4*) Any compound, mixture, or preparation that contains any quantity of any of the substances referred to in (ii)(B)(*1*) through (ii)(B)(*3*) of this definition;

(C) One-tenth gram of a mixture or substance described in (ii)(B) of this definition that contains cocaine base;

(D) One-tenth gram of a mixture or substance containing a detectable amount of phencyclidine (PCP);

(E) Five hundred micrograms of lysergic acid diethylamide (LSD);

(F) One ounce of a mixture or substance containing a detectable amount of marijuana;

(G) One gram of methamphetamine, its salts, isomers, and salts of its isomers, or one gram of a mixture or substance containing a detectable amount of methamphetamine, its salts, isomers, or salts of its isomers.

(iii) The possession of a narcotic, a depressant, a stimulant, a hallucinogen or a cannabis-controlled substance will be considered in excess of personal use quantities if the dosage unit amount possessed provides the same or greater equivalent efficacy as described in (ii)(B) of this definition.

(6) *Property* means property subject to forfeiture under 21 U.S.C. 881(a)(4), (6), or (7); 19 U.S.C. 1595a; or 49 U.S.C. 80303.

(7) *Seizing agency* means the Federal agency that has seized the property or adopted the seizure of another agency and has the responsibility for administratively forfeiting the property;

(8) *Statutory rights or defenses to the forfeiture* means all legal and equitable rights and remedies available to a claimant of property seized for forfeiture.

(c) *Petition for expedited release in an administrative forfeiture proceeding.*

(1) Where property is seized for administrative forfeiture involving controlled substances in personal use quantities, the owner may petition the Postal Inspection Service for expedited release of the property.

(2) Where property described in paragraph (c)(1) of this section is a commercial fishing industry vessel proceeding to or from a fishing area or intermediate port of call or actually engaged in fishing operations, which would be subject to seizure for administrative forfeiture for a violation of law involving controlled substances in personal use quantities, a summons to appear shall be issued in lieu of a physical seizure. The vessel shall report to the port designated in the summons. The Postal Inspection Service shall be authorized to effect administrative forfeiture as if the vessel had been physically seized. Upon answering the summons to appear on or prior to the last reporting date specified in the summons, the owner of the vessel may file a petition for expedited release pursuant to paragraph (c)(1) of this section, and the provisions of paragraph (c)(1) and other provisions in this section pertaining to a petition for expedited release shall apply as if the vessel had been physically seized.

(3) The owner filing the petition for expedited release shall establish the following:

(i) The owner has a valid, good faith interest in the seized property as owner or otherwise;

(ii) The owner reasonably attempted to ascertain the use of the property in a normal and customary manner; and

(iii) The owner did not know of or consent to the illegal use of the property, or in the event that the owner knew or should have known of the illegal use, the owner did what reasonably could be expected to prevent the violation.

(4) In addition to those factors listed in paragraph (c)(3), if an owner can demonstrate that the owner has other statutory rights or defenses that would cause the owner to prevail on the issue of forfeiture, such factors shall also be considered in ruling on the petition for expedited release.

(5) A petition for expedited release must be received by the Postal Inspection Service within 20 days from the date of the first publication of the notice of seizure in order to be considered by the Postal Inspection Service. The petition must be executed and sworn to by the owner, and both the envelope and the request must be clearly marked ''PETITION FOR EXPEDITED RELEASE.'' Such petition shall be filed with the appropriate office or official identified in the personal written notice and the publication notice.

(6) The petition shall include the following:

(i) A complete description of the property, including identification numbers, if any, and the date and place of seizure;

(ii) The petitioner's interest in the property, which shall be supported by title documentation, bills of sale, contracts, mortgages, or other satisfactory documentary evidence; and

(iii) A statement of the facts and circumstances, to be established by satisfactory proof, relied upon by the petitioner to justify expedited release of the seized property.

(d) *Ruling on petition for expedited release in an administrative forfeiture proceeding.*

(1) If a final administrative determination of the case, without regard to the provisions of this section, is made within 21 days of the seizure, the Postal Inspection Service need take no further action under this section on a petition for expedited release received pursuant to paragraph (c) of this section.

(2) If no such final administrative determination is made within 21 days of the seizure, the following procedure shall apply. The Postal Inspection Service shall, within 20 days after the receipt of the petition for expedited release, determine whether the petition filed by the owner has established the factors listed in paragraph (c)(3) of this section and:

(i) If the Postal Inspection Service determines that those factors have been established, it shall terminate the administrative proceedings and return the property to the owner (or in the case of a commercial fishing industry vessel for which a summons has been issued shall dismiss the summons), except

where it is evidence of a violation of law; or

(ii) If the Postal Inspection Service determines that those factors have not been established, the agency shall proceed with the administrative forfeiture.

(e) *Posting of substitute monetary amount in an administrative forfeiture proceeding.*

(1) Where property is seized for administrative forfeiture involving controlled substances in personal use quantities, the owner may obtain release of the property by posting a substitute monetary amount with the Postal Inspection Service to be held subject to forfeiture proceedings in place of the seized property to be released. The property will be released to the owner upon the payment of an amount equal to the Government-appraised value of the property if the property is not evidence of a violation of law and has no design or other characteristics that particularly suit it for use in illegal activities. This payment must be in the form of a traveler's check, a money order, a cashier's check, or an irrevocable letter of credit made payable to the Postal Inspection Service. A bond in the form of a cashier's check will be considered as paid once the check has been accepted for payment by the financial institution that issued the check.

(2) If a substitute monetary amount is posted and the property is administratively forfeited, the Postal Inspection Service will forfeit the substitute amount in lieu of the property.

(f) *Notice provisions.* At the time of seizure of property defined in paragraph (b)(6) of this section for violations involving the possession of personal use quantities of a controlled substance, the Postal Inspection Service must provide written notice to the possessor of the property specifying the procedures for filing of a petition for expedited release and for the posting of a substitute monetary bond as set forth in section 6079 of the Anti-Drug Abuse Act of 1988 and implementing regulations.

4. Section 233.9 is revised to read as follows:

§ 233.9 Regulations governing remission or mitigation of administrative, civil, and criminal forfeitures.

(a) *Purpose, authority, and scope*—(1) *Purpose.* This section sets forth the procedures for Postal Inspection Service officials to follow when considering remission or mitigation of administrative forfeitures under the jurisdiction of the Postal Inspection Service. The purpose of these regulations is to provide a basis for the partial or total remission of forfeiture for individuals who have an interest in the forfeited property but who did not participate in, or have knowledge of, the conduct that resulted in the property being subject to forfeiture and, where required, took all reasonable steps under the circumstances to ensure that such property would not be used, acquired, or disposed of contrary to law. Additionally, the regulations provide for partial or total mitigation of the forfeiture and imposition of alternative conditions in appropriate circumstances.

(2) *Authority to grant remission and mitigation.*

(i) Remission and mitigation functions in administrative forfeitures under the jurisdiction of the Postal Inspection Service are performed by the Chief Counsel.

(ii) Remission and mitigation functions in judicial cases are performed by the Criminal Division of the Department of Justice. Within the Criminal Division, authority to grant remission and mitigation is delegated to the Chief, Asset Forfeiture and Money Laundering Section.

(iii) The powers and responsibilities delegated by the regulations in this section may be re-delegated to attorneys or managers working under the supervision of the Chief Counsel.

(3) *Scope.* This section governs any petition for remission filed with the Postal Inspection Service and supersedes any Postal Service regulation governing petitions for remission, to the extent such regulation is inconsistent with this section.

(4) *Applicability.* The time periods and internal requirements established in this section are designed to guide the orderly administration of the remission and mitigation process and are not intended to create rights or entitlements in favor of individuals seeking remission or mitigation. The regulations will apply to all forfeiture actions commenced on or after February 27, 2012.

(b) *Definitions.* As used in this section:

(1) *Administrative forfeiture* means the process by which property may be forfeited by the Postal Inspection Service rather than through judicial proceedings. Administrative forfeiture has the same meaning as ''nonjudicial forfeiture'', as that term is used in 18 U.S.C. 983.

(2) *Appraised value* means the estimated market value of an asset at the time and place of seizure if such or similar property was freely offered for sale between a willing seller and a willing buyer.

(3) *Assets Forfeiture Fund* means the Department of Justice Assets Forfeiture Fund, Department of the Treasury Assets Forfeiture Fund, or the Postal Service's Assets Forfeiture Fund, depending upon the identity of the seizing agency.

(4) *Attorney General* means the Attorney General of the United States or that official's designee.

(5) *Beneficial owner* means a person with actual use of, as well as an interest in, the property subject to forfeiture.

(6) *Chief, Asset Forfeiture and Money Laundering Section,* and *Chief,* refer to the Chief of the Asset Forfeiture and Money Laundering Section, Criminal Division, United States Department of Justice.

(7) *General creditor* means one whose claim or debt is not secured by a specific right to obtain satisfaction against the particular property subject to forfeiture.

(8) *Judgment creditor* means one who has obtained a judgment against the debtor but has not yet received full satisfaction of the judgment.

(9) *Judicial forfeiture* means either a civil or a criminal proceeding in a United States District Court that may result in a final judgment and order of forfeiture.

(10) *Lienholder* means a creditor whose claim or debt is secured by a specific right to obtain satisfaction against the particular property subject to forfeiture. A lien creditor qualifies as a lienholder if the lien:

(i) Was established by operation of law or contract;

(ii) Was created as a result of an exchange of money, goods, or services; and

(iii) Is perfected against the specific property forfeited for which remission or mitigation is sought (e.g., a real estate mortgage; a mechanic's lien).

(11) *Net equity* means the amount of a lienholder's monetary interest in the property subject to forfeiture. Net equity shall be computed by determining the amount of unpaid principal and unpaid interest at the time of seizure, and by adding to that sum unpaid interest calculated from the date of seizure through the last full month prior to the date of the decision on the petition. Where a rate of interest is set forth in a security agreement, the rate of interest to be used in this computation will be the annual percentage rate so specified in the security agreement that is the basis of the lienholder's interest. In this computation, however, there shall be no allowances for attorneys' fees, accelerated or enhanced interest

charges, amounts set by contract as damages, unearned extended warranty fees, insurance, service contract charges incurred after the date of seizure, allowances for dealer's reserve, or any other similar charges.

(12) *Nonjudicial forfeiture* has the same meaning as *administrative forfeiture* as defined in this section.

(13) *Owner* means the person in who primary title is vested or whose interest is manifested by the actual and beneficial use of the property, even though the title is vested in another. A victim of an offense, as defined in paragraph (b)(22) of this section, may also be an owner if that person has a present legally cognizable ownership interest in the property forfeited. A nominal owner of property will not be treated as its true owner if that person is not its beneficial owner.

(14) *Person* means an individual, partnership, corporation, joint business enterprise, estate, or other legal entity capable of owning property.

(15) *Petition* means a petition for remission or mitigation of forfeiture under the regulations in this part. This definition includes a petition for restoration of the proceeds of sale of forfeited property and a petition for the value of the forfeited property placed into official use.

(16) *Petitioner* means the person applying for remission, mitigation, restoration of the proceeds of sale, or for the appraised value of forfeited property, under this part. A petitioner may be an owner as defined in paragraph (b)(13), a lienholder as defined in paragraph (b)(10), or a victim as defined in paragraph (b)(22), subject to the limitations of paragraph (h).

(17) *Property* means real or personal property of any kind capable of being owned or possessed.

(18) *Record* means a series of arrests for related crimes, unless the arrestee was acquitted or the charges were dismissed for lack of evidence, a conviction for a related crime or completion of sentence within 10 years of the acquisition of the property subject to forfeiture, or two convictions for a related crime at any time in the past.

(19) *Related crime* as used in paragraphs (b)(18) and (f) means any crime similar in nature to that which gives rise to the seizure of property for forfeiture. For example, where property is seized for a violation of the Federal laws relating to drugs, a related crime would be any offense involving a violation of the Federal laws relating to drugs, or the laws of any state or political subdivision thereof relating to drugs.

(20) *Related offense* as used in paragraph (h) means:

(i) Any predicate offense charged in a Federal Racketeer Influenced and Corrupt Organizations Act (RICO) count for which forfeiture was ordered; or

(ii) An offense committed as part of the same scheme or design, or pursuant to the same conspiracy, as was involved in the offense for which forfeiture was ordered.

(21) *Ruling Official* means any official to whom decision making authority has been delegated pursuant to paragraph (a)(2).

(22) *Seizing agency* means any Federal agency that seized the property or adopted the seizure of another agency for Federal forfeiture.

(23) *Victim* means a person who has incurred a pecuniary loss as a direct result of the commission of the offense underlying a forfeiture. A drug user is not considered a victim of a drug trafficking offense under this definition. A victim does not include one who acquires a right to sue the perpetrator of the criminal offense for any loss by assignment, subrogation, inheritance, or otherwise from the actual victim, unless that person has acquired an actual ownership interest in the forfeited property; provided however, that if a victim has received compensation from insurance or any other source with respect to a pecuniary loss, remission may be granted to the third party who provided compensation, up to the amount of the victim's pecuniary loss as defined in paragraph (h)(3).

(24) *Violator* means the person whose use or acquisition of the property in violation of the law subjected such property to seizure for forfeiture.

(c) *Petitions in administrative forfeiture cases*—(1) *Notice of seizure.* The notice of seizure and intent to forfeit the property shall advise any persons who may have a present ownership interest in the property to submit their petitions for remission or mitigation within 30 days of the date they receive the notice in order to facilitate processing. Petitions shall be considered any time after notice until the property has been forfeited, except in cases involving petitions to restore the proceeds from the sale of forfeited property. A notice of seizure shall include the Ruling Official, the mailing and street address of the official to whom petitions should be sent, and an asset identifier number.

(2) *Persons who may file.*

(i) A petition for remission or mitigation must be filed by a petitioner as defined in paragraph (b)(16), or as prescribed in paragraph (i)(7) and (8). A person or person acting on their behalf may not file a petition if, after notice or knowledge of the fact that a warrant or process has been issued for his apprehension, in order to avoid criminal prosecution the person:

(A) Purposely leaves the jurisdiction of the United States;

(B) Declines to enter or reenter the United States to submit to its jurisdiction; or

(C) Otherwise evades the jurisdiction of the court in which a criminal matter is pending against the person.

(ii) Paragraph (c)(2)(A) applies to a petition filed by a corporation if any majority shareholder, or individual filing the claim on behalf of the corporation:

(A) Purposely leaves the jurisdiction of the United States;

(B) Declines to enter or reenter the United States to submit to its jurisdiction; or

(C) Otherwise evades the jurisdiction of the court in which a criminal case is pending against the person.

(3) *Contents of petition.*

(i) All petitions must include the following information in clear and concise terms:

(A) The name, address, and social security or other taxpayer identification number of the person claiming an interest in the seized property who is seeking remission or mitigation;

(B) The name of the seizing agency, the asset identifier number, and the date and place of seizure;

(C) A complete description of the property, including make, model, and serial numbers, if any; and

(D) A description of the petitioner's interest in the property as owner, lienholder, or otherwise, supported by original or certified bills of sale, contracts, deeds, mortgages, or other documentary evidence. Such documentation includes evidence establishing the source of funds for seized currency or the source of funds used to purchase the seized asset.

(ii) Any factual recitation or documentation of any type in a petition must be supported by a declaration under penalty of perjury that meets the requirements of 28 U.S.C. 1746.

(4) *Releases.* In addition to the contents of the petition for remission or mitigation set forth in paragraph (c)(3) of this section, upon request, the petitioner shall also furnish the agency with an instrument executed by the titled or registered owner and any other known claimant of an interest in the property releasing interest in such property.

(5) *Filing a petition.*

(i) A petition for remission or mitigation subject to administrative

forfeiture is to be sent to the official address provided in the notice of seizure and shall be sworn to by the petitioner or by the petitioner's attorney upon information and belief, supported by the client's sworn notice of representation pursuant to 28 U.S.C. 1746, as set out in paragraph (i)(7).

(ii) If the notice of seizure does not provide an official address, the petition shall be addressed to the Asset Forfeiture Unit at the following address: Asset Forfeiture Unit, Criminal Investigations, U.S. Postal Inspection Service, P.O. Box 44373, Washington, DC 20026–4373.

(iii) Submission by facsimile or other electronic means will not be accepted.

(6) *Agency investigation.* Upon receipt of a petition, the Postal Inspection Service shall investigate the merits of the petition and prepare a written report containing the results of that investigation. This report shall be submitted to the Ruling Official for review and consideration.

(7) *Ruling.* Upon receipt of the petition and the agency report, the Ruling Official for the Postal Inspection Service shall review the petition and the report, if any, and shall rule on the merits of the petition. No hearing shall be held.

(8) *Petitions granted.* If the Ruling Official grants a remission or mitigation of the forfeiture, a copy of the decision shall be mailed to the petitioner or, if represented by an attorney, to the petitioner's attorney. A copy shall also be sent to the U.S. Marshals Service, or other property custodian. The written decision shall include the terms and conditions, if any, upon which the remission or mitigation is granted, and the procedures the petitioner must follow to obtain release of the property or the monetary interest therein.

(9) *Petitions denied.* If the Ruling Official denies a petition, a copy of the decision shall be mailed to the petitioner or, if represented by an attorney, to the petitioner's attorney of record. A copy of the decision shall also be sent to the U.S. Marshals Service, or other property custodian. The decision shall specify the reason that the petition was denied. The decision shall advise the petitioner that a request for reconsideration of the denial of the petition may be submitted to the Ruling Official in accordance with paragraph (c)(10).

(10) *Request for reconsideration.*

(i) A request for reconsideration of the denial of the petition shall be considered if:

(A) It is postmarked or received by the office of the Ruling Official within 10 days from the receipt of the notice of denial of the petition by the petitioner; and

(B) The request is based on information or evidence not previously considered that is material to the basis for the denial or presents a basis clearly demonstrating that the denial was erroneous.

(ii) In no event shall a request for reconsideration be decided by the same Ruling Official who ruled on the original petition.

(iii) Only one request for reconsideration of a denial of a petition shall be considered.

(11) *Restoration of proceeds from sale.*

(i) A petition for restoration of the proceeds from the sale of forfeited property, or for the appraised value of forfeited property when the forfeited property has been retained by or delivered to a Government agency for official use, may be submitted by an owner or lienholder in cases in which the petitioner:

(A) Did not know of the seizure prior to the entry of a declaration of forfeiture; and

(B) Could not reasonably have known of the seizure prior to the entry of a declaration of forfeiture.

(ii) Such a petition shall be submitted pursuant to paragraphs (c)(2) through (c)(5) of this section within 90 days of the date the property is sold or otherwise disposed of.

(d) *Petitions in judicial forfeiture cases*—(1) *Notice of seizure.* The notice of seizure and intent to forfeit the property shall advise any persons who may have a present ownership interest in the property to submit their petitions for remission or mitigation within 30 days of the date they receive the notice in order to facilitate processing. Petitions shall be considered any time after notice until such time as the forfeited property is placed in official use, sold, or otherwise disposed of according to law, except in cases involving petitions to restore property. A notice of seizure shall include the title of the Ruling Official and the mailing and street address of the official to whom petitions should be sent, the name of the agency seizing the property, an asset identifier number, and the district court docket number.

(2) *Persons who may file.* A petition for remission or mitigation must be filed by a petitioner as defined in paragraph (b)(16), or as prescribed in paragraph (i)(7) and (8).

(3) *Contents of petition.*

(i) All petitions must include the following information in clear and concise terms:

(A) The name, address, and Social Security or other taxpayer identification number of the person claiming an interest in the seized property who is seeking remission or mitigation;

(B) The name of the seizing agency, the asset identifier number, and the date and place of seizure;

(C) The district court docket number;

(D) A complete description of the property, including the address or legal description of real property, and make, model, and serial numbers of personal property, if any; and

(E) A description of the petitioner's interest in the property as owner, lienholder, or otherwise, supported by original or certified bills of sale, contracts, mortgages, deeds, or other documentary evidence.

(ii) Any factual recitation or documentation of any type in a petition must be supported by a declaration under penalty of perjury that meets the requirements of 28 U.S.C. 1746.

(4) *Releases.* In addition to the content of the petition for remission or mitigation set forth in paragraph (d)(3) of this section, the petitioner, upon request, also shall furnish the agency with an instrument executed by the titled or registered owner and any other known claimant of an interest in the property releasing the interest in such property.

(5) *Filing petition with Department of Justice.* A petition for remission or mitigation of a judicial forfeiture shall be addressed to the Attorney General; shall be sworn to by the petitioner or by the petitioner's attorney upon information and belief, supported by the client's sworn notice of representation pursuant to 28 U.S.C. 1746, as set forth in paragraph (i)(7) of this section; and shall be submitted to the U.S. Attorney for the district in which the judicial forfeiture proceedings are brought.

(6) *Agency investigation and recommendation; U.S. Attorney's recommendation.* Upon receipt of a petition, the U.S. Attorney shall direct the seizing agency to investigate the merits of the petition based on the information provided by the petitioner and the totality of the agency's investigation of the underlying basis for forfeiture. The agency shall submit to the U.S. Attorney a report of its investigation and its recommendation on whether the petition should be granted or denied. Upon receipt of the agency's report and recommendation, the U.S. Attorney shall forward to the Chief, Asset Forfeiture and Money Laundering Section, the petition, the seizing agency's report and recommendation, and the U.S. Attorney's recommendation on whether the petition should be granted or denied.

(7) *Ruling.* The Chief shall rule on the petition. No hearing shall be held. The Chief shall not rule on any petition for remission if such remission was previously denied by the administrative agency pursuant to paragraph (c) of this section.

(8) *Petitions granted.* If the Chief grants a remission or mitigates the forfeiture, the Chief shall mail a copy of the decision to the petitioner (or, if represented by an attorney, to the petitioner's attorney), and shall mail or transmit electronically a copy of the decision to the appropriate U.S. Attorney, the U.S. Marshals Service or other property custodian, and the seizing agency. The written decision shall include the terms and conditions, if any, upon which the remission or mitigation is granted and the procedures the petitioner must follow to obtain release of the property or the monetary interest therein. The Chief shall advise the petitioner or the petitioner's attorney to consult with the U.S. Attorney as to such terms and conditions. The U.S. Attorney shall confer with the seizing agency regarding the release and shall coordinate disposition of the property with that office and the U.S. Marshals Service or other property custodian.

(9) *Petitions denied.* If the Chief denies a petition, a copy of that decision shall be mailed to the petitioner (or, if represented by an attorney, to the petitioner's attorney of record), and mailed or transmitted electronically to the appropriate U.S. Attorney, the U.S. Marshals Service or other property custodian, and the seizing agency. The decision shall specify the reason that the petition was denied. The decision shall advise the petitioner that a request for reconsideration of the denial of the petition may be submitted to the Chief at the address provided in the decision, in accordance with paragraph (d)(10) of this section.

(10) *Request for reconsideration.*

(i) A request for reconsideration of the denial shall be considered if:

(A) It is postmarked or received by the Asset Forfeiture and Money Laundering Section at the address contained in the decision denying the petition within 10 days from the receipt of the notice of denial of the petition by the petitioner;

(B) A copy of the request is also received by the appropriate U.S. Attorney within 10 days of the receipt of the denial by the petitioner; and

(C) The request is based on information or evidence not previously considered that is material to the basis for the denial or presents a basis clearly demonstrating that the denial was erroneous.

(ii) In no event shall a request for reconsideration be decided by the Ruling Official who ruled on the original petition.

(iii) Only one request for reconsideration of a denial of a petition shall be considered.

(iv) Upon receipt of the request for reconsideration of the denial of a petition, disposition of the property will be delayed pending notice of the decision at the request of the Chief. lf the request for reconsideration is not received within the prescribed period, the U.S. Marshals Service may dispose of the property.

(11) *Restoration of proceeds from sale.*

(i) A petition for restoration of the proceeds from the sale of forfeited property, or for the appraised value of forfeited property when the forfeited property has been retained by or delivered to a Government agency for official use, may be submitted by an owner or lienholder in cases in which the petitioner:

(A) Did not know of the seizure prior to the entry of a final order of forfeiture; and

(B) Could not reasonably have known of the seizure prior to the entry of a final order of forfeiture.

(ii) Such a petition must be submitted pursuant to paragraphs (d)(2) through (d)(5) of this section within 90 days of the date the property was sold or otherwise disposed of.

(e) *Criteria governing administrative and judicial remission and mitigation.*

(1) *Remission.*

(i) The Ruling Official shall not grant remission of a forfeiture unless the petitioner establishes that the petitioner has a valid, good faith, and legally cognizable interest in the seized property as owner or lienholder as defined in this part and is an innocent owner within the meaning of 18 U.S.C. 983(d)(2)(A) or (d)(3)(A).

(ii) For purposes of this paragraph, the knowledge and responsibilities of a petitioner's representative, agent, or employee are imputed to the petitioner where the representative, agent, or employee was acting in the course of that person's employment and in furtherance of the petitioner's business.

(iii) The petitioner has the burden of establishing the basis for granting a petition for remission or mitigation of forfeited property, a restoration of proceeds of sale or appraised value of forfeited property, or a reconsideration of a denial of such a petition. Failure to provide information or documents and to submit to interviews, as requested, may result in a denial of the petition.

(iv) The Ruling Official shall presume a valid forfeiture and shall not consider whether the evidence is sufficient to support the forfeiture.

(v) Willful, materially false statements or information made or furnished by the petitioner in support of a petition for remission or mitigation of forfeited property, the restoration of proceeds or appraised value of forfeited property, or the reconsideration of a denial of any such petition shall be grounds for denial of such petition and possible prosecution for the filing of false statements.

(2) *Mitigation.*

(i) The Ruling Official may grant mitigation to a party not involved in the commission of the offense underlying forfeiture:

(A) Where the petitioner has not met the minimum conditions for remission, but the Ruling Official finds that some relief should be granted to avoid extreme hardship, and that return of the property combined with imposition of monetary or other conditions of mitigation in lieu of a complete forfeiture will promote the interest of justice and will not diminish the deterrent effect of the law. Extenuating circumstances justifying such a finding include those circumstances that reduce the responsibility of the petitioner for knowledge of the illegal activity, knowledge of the criminal record of a user of the property, or failure to take reasonable steps to prevent the illegal use or acquisition by another for some reason, such as a reasonable fear of reprisal; or

(B) Where the minimum standards for remission have been satisfied but the overall circumstances are such that, in the opinion of the Ruling Official, complete relief is not warranted.

(ii) The Ruling Official may as a matter of discretion grant mitigation to a party involved in the commission of the offense underlying the forfeiture where certain mitigating factors exist, including, but not limited to: The lack of a prior record or evidence of similar criminal conduct; if the violation does not include drug distribution, manufacturing, or importation, the fact that the violator has taken steps, such as drug treatment, to prevent further criminal conduct; the fact that the violation was minimal and was not part of a larger criminal scheme; the fact that the violator has cooperated with Federal, state, or local investigations relating to the criminal conduct underlying the forfeiture; or the fact that complete forfeiture of an asset is not necessary to achieve the legitimate purposes of forfeiture.

(iii) Mitigation may take the form of a monetary condition or the imposition of other conditions relating to the

continued use of the property, and the return of the property, in addition to the imposition of any other costs that would be chargeable as a condition to remission. This monetary condition is considered as an item of cost payable by the petitioner, and shall be deposited into the Postal Inspection Service's Fund as an amount realized from forfeiture in accordance with the applicable statute. If the petitioner fails to accept the Ruling Official's mitigation decision or any of its conditions, or fails to pay the monetary amount within 20 days of the receipt of the decision, the property shall be sold, and the monetary amount imposed and other costs chargeable as a condition to mitigation shall be subtracted from the proceeds of the sale before transmitting the remainder to the petitioner.

(f) *Special rules for specific petitioners*—(1) *General creditors.* A general creditor may not be granted remission or mitigation of forfeiture unless that person otherwise qualifies as petitioner under this part.

(2) *Rival claimants.* If the beneficial owner of the forfeited property and the owner of a security interest in the same property each files a petition, and if both petitions are found to be meritorious, the claims of the beneficial owner shall take precedence.

(3) *Voluntary bailments.* A petitioner who allows another to use the petitioner's property without cost, and who is not in the business of lending money secured by property or of leasing or renting property for profit, shall be granted remission or mitigation of forfeiture in accordance with the provisions of paragraph (e) of this section.

(4) *Lessors.* A person engaged in the business of leasing or renting real or personal property on a long-term basis with the right to sublease shall not be entitled to remission or mitigation of a forfeiture of such property unless the lessor can demonstrate compliance with all the requirements of paragraph (e) of this section.

(5) *Straw owners.* A petition by any person who has acquired a property interest recognizable under this part, and who knew or had reason to believe that the interest was conveyed by the previous owner for the purpose of circumventing seizure, forfeiture, or the regulations in this part, shall be denied. A petition by a person who purchases or owns property for another who has a record for related crimes as defined in paragraph (b)(19), or a petition by a lienholder who knows or has reason to believe that the purchaser or owner of record is not the real purchaser or owner, shall be denied unless both the purchaser of record and the real purchaser or owner meet the requirements of paragraph (e) of this section.

(6) *Judgment creditors.*

(i) A judgment creditor will be recognized as a lienholder if:

(A) The judgment was duly recorded before the seizure of the property for forfeiture;

(B) Under applicable state or other local law, the judgment constitutes a valid lien on the property that attached to it before the seizure of the property for forfeiture; and

(C) The petitioner had no knowledge of the commission of any act or acts giving rise to the forfeiture at the time the judgment became a lien on the forfeited property.

(ii) A judgment creditor will not be recognized as a lienholder if the property in question is not property of which the judgment debtor is entitled to claim ownership under applicable state or other local law (e.g., stolen property). A judgment creditor is entitled under this part to no more than the amount of the judgment, exclusive of any interest, costs, or other fees including attorney's fees associated with the action that led to the judgment or its collection.

(iii) A judgment creditor's lien must be registered in the district where the property is located if the judgment was obtained outside the district.

(g) *Terms and conditions of remission and mitigation*—(1) *Owners.*

(i) An owner's interest in property that has been forfeited is represented by the property itself or by a monetary interest equivalent to that interest at the time of seizure. Whether the property or a monetary equivalent will be remitted to an owner shall be determined at the discretion of the Ruling Official.

(ii) If a civil judicial forfeiture action against the property is pending, release of the property must await an appropriate court order.

(iii) Where the Government sells or disposes of the property prior to the grant of the remission, the owner shall receive the proceeds of that sale, less any costs incurred by the Government in the sale. The Ruling Official, as a matter of discretion, may waive the deduction of costs and expenses incident to the forfeiture.

(iv) Where the owner does not comply with the conditions imposed upon release of the property by the Ruling Official, the property shall be sold. Following the sale, the proceeds shall be used to pay all costs of the forfeiture and disposition of the property, in addition to any monetary conditions imposed. The remaining balance shall be paid to the owner.

(2) *Lienholders.*

(i) When the forfeited property is to be retained for official use or transferred to a state or local law enforcement agency or foreign government pursuant to law, and remission or mitigation has been granted to a lienholder, the recipient of the property shall assure that:

(A) In the case of remission, the lien is satisfied as determined through the petition process; or

(B) In the case of mitigation, an amount equal to the net equity, less any monetary conditions imposed, is paid to the lienholder prior to the release of the property to the recipient agency of foreign government.

(ii) When the forfeited property is not retained for official use or transferred to another agency or foreign government pursuant to law, the lienholder shall be notified by the Ruling Official of the right to select either of the following alternatives:

(A) *Return of property.* The lienholder may obtain possession of the property after paying the United States, through the Ruling Official, the costs and expenses incident to the forfeiture, the amount, if any, by which the appraised value of the property exceeds the lienholder's net equity in the property, and any amount specified in the Ruling Official's decision as a condition to remit the property. The Ruling Official, as a matter of discretion, may waive costs and expenses incident to the forfeiture. The Ruling Official shall forward a copy of the decision, a memorandum of disposition, and the original releases to the division or field office responsible for the seizure and custody of the property or, if applicable, to the U.S. Marshals Service, who shall thereafter release the property to the lienholder; or

(B) *Sale of Property and Payment to Lienholder.* Subject to the provisions of paragraph (i)(1), upon sale of the property, the lienholder may receive the payment of a monetary amount up to the sum of the lienholder's net equity, less the expenses and costs incident to the forfeiture and sale of the property, and any other monetary conditions imposed. The Ruling Official, as a matter of discretion, may waive costs and expenses incident to the forfeiture.

(iii) If the lienholder does not notify the Ruling Official of the selection of one of the two options set forth in paragraph (g)(2)(ii) of this section within 20 days of the receipt of notification, the Ruling Official shall direct the division or field office responsible for the seizure or custody, or if applicable, the U.S. Marshals Service, to sell the property and pay the lienholder an amount up to the net equity, less the costs and

expenses incurred incident to the forfeiture and sale, and any monetary conditions imposed. In the event a lienholder subsequently receives a payment of any kind on the debt owed for which he or she received payment as a result of the granting of remission or mitigation, the lienholder shall reimburse the Postal Service Forfeiture Fund to the extent of the payment received.

(iv) Where the lienholder does not comply with the conditions imposed upon the release of the property, the property shall be sold after forfeiture. From the proceeds of the sale, all costs incident to the forfeiture and sale shall first be deducted, and the balance up to the net equity, less any monetary conditions, shall be paid to the lienholder.

(h) *Remission procedures for victims.* This section applies to victims of an offense underlying the forfeiture of property, or of a related offense, who do not have a present ownership interest in the forfeited property (or, in the case of multiple victims of an offense, who do not have a present ownership interest in the forfeited property that is clearly superior to that of other petitioner victims). This section applies only with respect to property forfeited pursuant to statutes that explicitly authorize restoration or remission of forfeited property to victims. A victim requesting remission under this section may concurrently request remission as an owner, pursuant to the regulations set forth in paragraphs (c), (d), and (g) of this section. The claims of victims granted remission as both an owner and victim shall, like other owners, have priority over the claims of any non-owner victims whose claims are recognized under this section.

(1) *Remission procedure for victims*—(i) *Where to file.* Persons seeking remission as victims shall file petitions for remission with the appropriate deciding official as described in paragraph (c)(5) (administrative forfeiture) or (d)(5) (judicial forfeiture) of this section.

(ii) *Time of decision.* The Ruling Official or that person's designee as described in paragraph (a)(2) of this section may consider petitions filed by persons claiming eligibility for remission as victims at any time prior to the disposal of the forfeited property in accordance with law.

(iii) *Request for reconsideration.* Persons denied remission under this section may request reconsideration of the denial, in accordance with paragraph (c)(10) (administrative forfeiture) or (d)(10) (judicial forfeiture) of this section.

(2) *Qualification to file.* A victim, as defined in paragraph (b)(22) of this section, may be granted remission, if in addition to complying with the other applicable provisions of paragraph (h) of this section, the victim satisfactorily demonstrates that:

(i) A pecuniary loss of a specific amount has been directly caused by the criminal offense, or related offense, that was the underlying basis for the forfeiture, and that the loss is supported by documentary evidence including invoices and receipts;

(ii) The pecuniary loss is the direct result of the illegal acts and is not the result of otherwise lawful acts that were committed in the course of a criminal offense;

(iii) The victim did not knowingly contribute to, participate in, benefit from, or act in a willfully blind manner towards commission of the offense, or related offense, that was the underlying basis of the forfeiture;

(iv) The victim has not in fact been compensated for the wrongful loss of the property by the perpetrator or others; and

(v) The victim does not have recourse reasonably available to other assets from which to obtain compensation for the wrongful loss of the property.

(3) *Pecuniary loss.* The amount of the pecuniary loss suffered by a victim for which remission may be granted is limited to the fair market value of the property of which the victim was deprived as of the date of the occurrence of the loss. No allowance shall be made for interest forgone or for collateral expenses incurred to recover lost property or to seek other recompense.

(4) *Torts.* A tort associated with illegal activity that formed the basis for the forfeiture shall not be a basis for remission, unless it constitutes the illegal activity itself, nor shall remission be granted for physical injuries to a petitioner or for damage to a petitioner's property.

(5) *Denial of petition.* As a matter of discretion, the Ruling Official may decline to grant remission where:

(i) There is substantial difficulty in calculating the pecuniary loss incurred by the victim or victims;

(ii) The amount of the remission, if granted, would be small compared with the amount of expenses incurred by the Government in determining whether to grant remission; or

(iii) The total number of victims is large and the monetary amount of the remission so small as to make its granting impractical.

(6) *Pro rata basis.* In granting remission to multiple victims pursuant to this section, the Ruling Official should generally grant remission on a pro rata basis to recognized victims when petitions cannot be granted in full due to the limited value of the forfeited property. However, the Ruling Official may consider, among others, the following factors in establishing appropriate priorities in individual cases:

(i) The specificity and reliability of the evidence establishing a loss;

(ii) The fact that a particular victim is suffering an extreme financial hardship;

(iii) The fact that a particular victim has cooperated with the Government in the investigation related to the forfeiture or to a related persecution or civil action; and

(iv) In the case of petitions filed by multiple victims of related offenses, the fact that a particular victim is a victim of the offense underlying the forfeiture.

(7) *Reimbursement.* Any petitioner granted remission pursuant to this part shall reimburse the Postal Service Forfeiture Fund for the amount received, to the extent the individual later receives compensation for the loss of property from any other source. The petitioner shall surrender the reimbursement upon payment from any secondary source.

(8) *Claims of financial institution regulatory agencies.* In cases involving property forfeitable under 18 U.S.C. 981(a)(1)(C) or (D), the Ruling Official may decline to grant a petition filed by a petitioner in whole or in part due to the lack of sufficient forfeitable funds to satisfy both the petitioner and claims of the financial institution regulatory agencies pursuant to 18 U.S.C. 981(e)(3) or (7). Generally, claims of financial institution regulatory agencies pursuant to 18 U.S.C. 981(e)(3) or (7) shall take priority over claims of victims.

(9) *Amount of Remission.* Consistent with the Assets Forfeiture Fund statute (28 U.S.C. 524(c)), the amount of remission shall not exceed the victim's share of the net proceeds of the forfeitures associated with the activity that caused the victim's loss. The calculation of net proceeds includes, but is not limited to, the deduction of allowable Government expenses and valid third-party claims.

(i) *Miscellaneous provisions*—(1) *Priority of payment.* Except where otherwise provided in this part, costs incurred by the Postal Inspection Service, the U.S. Marshals Service, and other agencies participating in the forfeiture that were incident to the forfeiture, sale, or other disposition of the property shall be deducted from the amount available for remission or mitigation. Such costs include, but are not limited to, court costs, storage costs,

brokerage and other sales-related costs, the amount of any liens and associated costs paid by the Government on the property, costs incurred in paying the ordinary and necessary expenses of a business seized for forfeiture, awards for information as authorized by statute, expenses of trustees or other assistants pursuant to paragraph (i)(3) of this section, investigative or prosecutorial costs specially incurred incident to the particular forfeiture, and costs incurred incident to the processing of petitions for remission or mitigation. The remaining balance shall be available for remission or mitigation. The Ruling Official shall direct the distribution of the remaining balance in the following order or priority, except that the Ruling Official may exercise discretion in determining the priority between petitioners belonging to classes described in paragraph (i)(1)(iii) and (iv) of this section in exceptional circumstances:

(i) Owners;

(ii) Lienholders;

(iii) Federal financial institution regulatory agencies (pursuant to paragraph (i)(5) of this section), not constituting owners or lienholders; and

(iv) Victims not constituting owners or lienholders pursuant to paragraph (h) of this part.

(2) *Sale or disposition of property prior to ruling.* If forfeited property has been sold or otherwise disposed of prior to a ruling, the Ruling Official may grant relief in the form of a monetary amount. The amount realized by the sale of property is presumed to be the value of the property. Monetary relief shall not be greater than the appraised value of the property at the time of seizure and shall not exceed the amount realized from the sale or other disposition. The proceeds of the sale shall be distributed as follows:

(i) Payment of the Government's expenses incurred incident to the forfeiture and sale, including court costs and storage charges, if any;

(ii) Payment to the petitioner of an amount up to that person's interest in the property;

(iii) Payment to the Postal Service Forfeiture Fund of all other costs and expenses incident to the forfeiture;

(iv) In the case of victims, payment of any amount up to the amount of that person's loss; and

(v) Payment of the balance remaining, if any, to the Postal Service Forfeiture Fund.

(3) *Trustees and other assistants.* As a matter of discretion, the Ruling Official, with the approval of the Chief Postal Inspector, may use the services of a trustee, other Government official, or appointed contractors to notify potential petitioners, process petitions, and make recommendations to the Ruling Official on the distribution of property to petitioners. The expense for such assistance shall be paid out of the forfeited funds.

(4) *Other agencies of the United States.* Where another agency of the United States is entitled to remission or mitigation of forfeited assets because of an interest that is recognizable under this part or is eligible for such transfer pursuant to 18 U.S.C. 981(e)(6), such agency shall request the transfer in writing, in addition to complying with any applicable provisions of paragraphs (c) through (e) of this section. The decision to make such transfer shall be made in writing by the Ruling Official.

(5) *Financial institution regulatory agencies.* A Ruling Official may direct the transfer of property under 18 U.S.C. 981(e) to certain Federal financial institution regulatory agencies or an entity acting in their behalf, upon receipt of a written request, in lieu of ruling on a petition for remission or mitigation.

(6) *Transfers to foreign governments.* A Ruling Official may decline to grant remission to any petitioner other than an owner or lienholder so that forfeited assets may be transferred to a foreign government pursuant to 18 U.S.C. 981(i)(1); 19 U.S.C. 1616a(c)(2); or 21 U.S.C. 881(e)(1)(E).

(7) *Filing by attorneys.*

(i) A petition for remission or mitigation may be filed by a petitioner or by that person's attorney or legal guardian. If an attorney files on behalf of the petitioner, the petition must include a signed and sworn statement by the client-petitioner stating that:

(A) The attorney has the authority to represent the petitioner in this proceeding;

(B) The petitioner has fully reviewed the petition; and

(C) The petition is truthful and accurate in every respect.

(ii) Verbal notification of representation is not acceptable. Responses and notification of rulings shall not be sent to an attorney claiming to represent a petitioner unless a written notice of representation is filed. No extensions of time shall be granted due to delays in submission of the notice of representation.

(8) *Consolidated petitions.* At the discretion of the Ruling Official in individual cases, a petition may be filed by one petitioner on behalf of other petitioners, provided the petitions are based on similar underlying facts, and the petitioner who files the petition has written authority to do so on behalf of other petitioners. This authority must be either expressed in documents giving the petitioner the authority to file petitions for remission, or reasonably implied from documents giving the petitioner express authority to file claims or lawsuits related to the course of conduct in question on behalf of these petitioners. An insurer or an administrator of an employee benefit plan, for example, which itself has standing to file a petition as a ''victim'' within the meaning of paragraph (b)(22) of this section, may also file a petition on behalf of its insured or plan beneficiaries for any claims they may have based on co-payments made to the perpetrator of the offense underlying the forfeiture, or the perpetrator of a ''related offense'' within the meaning of paragraph (b)(20), if the authority to file claims or lawsuits is contained in the document or documents establishing the plan. Where such a petition is filed, any amounts granted as remission must be transferred to the other petitioners, not the party filing the petition; although, as a matter of discretion, the Ruling Official may use the actual petitioner as an intermediary for transferring the amounts authorized as a remission to the other petitioners.

5. Section 233.10 is reserved.

§ 233.10 [Reserved].

Stanley F. Mires,

Attorney, Legal Policy & Legislative Advice.

[FR Doc. 2012–4396 Filed 2–24–12; 8:45 am]

BILLING CODE 7710–12–P

ENVIRONMENTAL PROTECTION AGENCY

40 CFR Part 52

[EPA–R04–OAR–2010–0936–201150, FRL–9637–9]

Approval and Promulgation of Air Quality Implementation Plans; State of Georgia; Regional Haze State Implementation Plan

AGENCY: Environmental Protection Agency (EPA).

ACTION: Proposed rule.

SUMMARY: EPA is proposing a limited approval of a revision to the Georgia state implementation plan (SIP) submitted by the State of Georgia through the Georgia Department of Natural Resources, Environmental Protection Division (GA EPD), on February 11, 2010, as supplemented on November 19, 2010, that addresses regional haze for the first implementation period. This SIP

revision, as supplemented, addresses the requirements of the Clean Air Act (CAA) and EPA's rules that require states to prevent any future and remedy any existing anthropogenic impairment of visibility in mandatory Class I areas (national parks and wilderness areas) caused by emissions of air pollutants from numerous sources located over a wide geographic area (also referred to as the ''regional haze program''). States are required to assure reasonable progress toward the national goal of achieving natural visibility conditions in Class I areas. EPA is proposing a limited approval of this SIP revision to implement the regional haze requirements for Georgia on the basis that the revision, as a whole, strengthens the Georgia SIP. EPA has previously proposed a limited disapproval of the Georgia regional haze SIP because of deficiencies in the State's regional haze SIP submittal arising from the remand by the U.S. Court of Appeals for the District of Columbia Circuit (D.C. Circuit) to EPA of the Clean Air Interstate Rule (CAIR). Consequently, EPA is not proposing to take action in this rulemaking to address the State's reliance on CAIR to meet certain regional haze requirements.

DATES: Comments must be received on or before March 28, 2012.

ADDRESSES: Submit your comments, identified by Docket ID No. EPA–R04–OAR–2010–0936, by one of the following methods:

1. *www.regulations.gov:* Follow the on-line instructions for submitting comments.
2. *Email: benjamin.lynorae@pea.gov.*
3. *Fax:* 404–562–9019.
4. *Mail:* EPA–R04–OAR–2010–0936, Regulatory Development Section, Air Planning Branch, Air, Pesticides and Toxics Management Division, U.S. Environmental Protection Agency, Region 4, 61 Forsyth Street SW., Atlanta, Georgia 30303–8960.
5. *Hand Delivery or Courier:* Lynorae Benjamin, Chief, Regulatory Development Section, Air Planning Branch, Air, Pesticides and Toxics Management Division, U.S. Environmental Protection Agency, Region 4, 61 Forsyth Street SW., Atlanta, Georgia 30303–8960. Such deliveries are only accepted during the Regional Office's normal hours of operation. The Regional Office's official hours of business are Monday through Friday, 8:30 to 4:30, excluding Federal holidays.

Instructions: Direct your comments to Docket ID No. ''EPA–R04–OAR–2010–0936.'' EPA's policy is that all comments received will be included in the public docket without change and may be made available online at *www.regulations.gov,* including any personal information provided, unless the comment includes information claimed to be Confidential Business Information (CBI) or other information whose disclosure is restricted by statute. Do not submit through *www.regulations.gov* or email, information that you consider to be CBI or otherwise protected. The *www.regulations.gov* Web site is an ''anonymous access'' system, which means EPA will not know your identity or contact information unless you provide it in the body of your comment. If you send an email comment directly to EPA without going through *www.regulations.gov,* your email address will be automatically captured and included as part of the comment that is placed in the public docket and made available on the Internet. If you submit an electronic comment, EPA recommends that you include your name and other contact information in the body of your comment and with any disk or CD–ROM you submit. If EPA cannot read your comment due to technical difficulties and cannot contact you for clarification, EPA may not be able to consider your comment. Electronic files should avoid the use of special characters, any form of encryption, and be free of any defects or viruses. For additional information about EPA's public docket visit the EPA Docket Center homepage at *http://www.epa.gov/epahome/dockets.htm.*

Docket: All documents in the electronic docket are listed in the *www.regulations.gov* index. Although listed in the index, some information is not publicly available, i.e., CBI or other information whose disclosure is restricted by statute. Certain other material, such as copyrighted material, is not placed on the Internet and will be publicly available only in hard copy form. Publicly available docket materials are available either electronically in *www.regulations.gov* or in hard copy at the Regulatory Development Section, Air Planning Branch, Air, Pesticides and Toxics Management Division, U.S. Environmental Protection Agency, Region 4, 61 Forsyth Street SW., Atlanta, Georgia 30303–8960. EPA requests that if at all possible, you contact the person listed in the **FOR FURTHER INFORMATION CONTACT** section to schedule your inspection. The Regional Office's official hours of business are Monday through Friday, 8:30 to 4:30, excluding Federal holidays.

FOR FURTHER INFORMATION CONTACT: Sara Waterson or Michele Notarianni, Regulatory Development Section, Air Planning Branch, Air, Pesticides and Toxics Management Division, U.S. Environmental Protection Agency, Region 4, 61 Forsyth Street SW., Atlanta, Georgia 30303–8960. Sara Waterson can be reached at telephone number (404) 562–9061 and by electronic mail at *waterson.sara@epa.gov.* Michele Notarianni can be reached at telephone number (404) 562–9031 and by electronic mail at *notarianni.michele@epa.gov.*

SUPPLEMENTARY INFORMATION:

Table of Contents

I. What action is EPA proposing to take?
II. What is the background for EPA's proposed action?
A. The Regional Haze Problem
B. Requirements of the CAA and EPA's Regional Haze Rule (RHR)
C. Roles of Agencies in Addressing Regional Haze
III. What are the requirements for the regional haze SIPs?
A. The CAA and the RHR
B. Determination of Baseline, Natural, and Current Visibility Conditions
C. Determination of Reasonable Progress Goals (RPGs)
D. Best Available Retrofit Technology (BART)
E. Long-Term Strategy (LTS)
F. Coordinating Regional Haze and Reasonably Attributable Visibility Impairment (RAVI) LTS
G. Monitoring Strategy and Other Implementation Plan Requirements
H. Consultation With States and Federal Land Managers (FLMs)
IV. What is EPA's analysis of Georgia's regional haze submittal?
A. Affected Class I Areas
B. Determination of Baseline, Natural and Current Visibility Conditions
1. Estimating Natural Visibility Conditions
2. Estimating Baseline Conditions
3. Summary of Baseline and Natural Conditions
4. Uniform Rate of Progress
C. Long-Term Strategy/Strategies
1. Emissions Inventory for 2018 With Federal and State Control Requirements
2. Modeling To Support the LTS and Determine Visibility Improvement for Uniform Rate of Progress
3. Relative Contributions To Visibility Impairment: Pollutants, Source Categories, and Geographic Areas
4. Procedure for Identifying Sources To Evaluate for Reasonable Progress Controls in Georgia and Surrounding Areas
5. Application of the Four CAA Factors in the Reasonable Progress Analysis
A. Facilities With Emissions Unit(s) Subject To Reasonable Progress Analysis
B. Facilities With Emissions Unit(s) Not Subject To Reasonable Progress Analysis
6. BART

A. BART-Eligible Sources
B. BART-Subject Sources
C. BART Determinations
7. RPGs
D. Coordination of RAVI and Regional Haze Requirements
E. Monitoring Strategy and Other Implementation Plan Requirements
F. Consultation With States and FLMs
1. Consultation With Other States
2. Consultation With the FLMs
G. Periodic SIP Revisions and Five-Year Progress Reports
V. What action is EPA taking?
VI. Statutory and Executive Order Reviews
A. Executive Order 12866, Regulatory Planning and Review
B. Paperwork Reduction Act
C. Regulatory Flexibility Act (RFA)
D. Unfunded Mandates Reform Act (UMRA)
E. Executive Order 13132, Federalism
F. Executive Order 13175, Coordination With Indian Tribal Governments
G. Executive Order 13045, Protection of Children From Environmental Health Risks and Safety Risks
H. Executive Order 13211, Actions That Significantly Affect Energy Supply, Distribution, or Use
I. National Technology Transfer and Advancement Act

I. What action is EPA proposing To take?

EPA is proposing a limited approval of Georgia's February 11, 2010, SIP revision and November 19, 2010, SIP supplement, addressing regional haze under CAA sections 301(a) and 110(k)(3) because these revisions, as a whole, strengthen the Georgia SIP. Throughout this document, references To Georgia's ''regional haze SIP'' or ''SIP submittal'' or ''SIP revision'' collectively refer To Georgia's original February 11, 2010, SIP revision and the supplement to this February 2010 SIP revision submitted on November 19, 2010. This proposed rulemaking and the accompanying Technical Support Document [1] (TSD) explain the basis for EPA's proposed limited approval action.[2]

In a separate action, EPA has proposed a limited disapproval of the Georgia regional haze SIP because of deficiencies in the State's regional haze SIP submittal arising from the State's reliance on CAIR to meet certain regional haze requirements. *See* 76 FR 82219 (December 30, 2011). EPA is not proposing to take action in today's rulemaking on issues associated with Georgia's reliance on CAIR in its regional haze SIP. Comments on EPA's proposed limited disapproval of Georgia's regional haze SIP are accepted at the docket for EPA's December 30, 2011, proposed rulemaking (*see* Docket ID No. EPA–HQ–OAR–2011–0729). The comment period for EPA's December 30, 2011, proposed rulemaking is scheduled to end on February 28, 2012.

II. What is the background for EPA's proposed action?

A. The Regional Haze Problem

Regional haze is visibility impairment that is produced by a multitude of sources and activities which are located across a broad geographic area and emit fine particles ($PM_{2.5}$) (e.g., sulfates, nitrates, organic carbon, elemental carbon, and soil dust), and their precursors (e.g., sulfur dioxide (SO_2), nitrogen oxides (NO_X), and in some cases, ammonia (NH_3) and volatile organic compounds (VOC)). Fine particle precursors react in the atmosphere to form fine particulate matter which impairs visibility by scattering and absorbing light. Visibility impairment reduces the clarity, color, and visible distance that one can see. $PM_{2.5}$ can also cause serious health effects and mortality in humans and contributes to environmental effects such as acid deposition and eutrophication.

Data from the existing visibility monitoring network, the ''Interagency Monitoring of Protected Visual Environments'' (IMPROVE) monitoring network, show that visibility impairment caused by air pollution occurs virtually all the time at most national park and wilderness areas. The average visual range [3] in many Class I areas [4] (i.e., national parks and memorial parks, wilderness areas, and international parks meeting certain size criteria) in the western United States is 100–150 kilometers, or about one-half to two-thirds of the visual range that would exist without anthropogenic air pollution. In most of the eastern Class I areas of the United States, the average visual range is less than 30 kilometers, or about one-fifth of the visual range that would exist under estimated natural conditions. *See* 64 FR 35715 (July 1, 1999).

B. Requirements of the CAA and EPA's Regional Haze Rule (RHR)

In section 169A of the 1977 Amendments to the CAA, Congress created a program for protecting visibility in the nation's national parks and wilderness areas. This section of the CAA establishes as a national goal the ''prevention of any future, and the remedying of any existing, impairment of visibility in mandatory Class I areas which impairment results from manmade air pollution.'' On December 2, 1980, EPA promulgated regulations to address visibility impairment in Class I areas that is ''reasonably attributable'' to a single source or small group of sources, i.e., ''reasonably attributable visibility impairment.'' *See* 45 FR 80084. These regulations represented the first phase in addressing visibility impairment. EPA deferred action on regional haze that emanates from a variety of sources until monitoring, modeling and scientific knowledge about the relationships between pollutants and visibility impairment were improved.

Congress added section 169B to the CAA in 1990 to address regional haze issues. EPA promulgated a rule to address regional haze on July 1, 1999 (64 FR 35713), the RHR. The RHR revised the existing visibility regulations to integrate into the regulation provisions addressing regional haze impairment and established a comprehensive visibility protection program for Class I areas. The requirements for regional haze, found at 40 CFR 51.308 and 51.309, are included in EPA's visibility protection regulations at 40 CFR 51.300–309. Some of the main elements of the regional haze requirements are summarized in section III of this preamble. The requirement to submit a regional haze SIP applies to all 50 states, the District

[1] EPA's TSD to this action, entitled ''*Technical Support Document for Georgia Regional Haze SIP Submittal,*'' is included in the public docket for this action.

[2] Under CAA sections 301(a) and 110(k)(6) and EPA's long-standing guidance, a limited approval results in approval of the entire SIP submittal, even of those parts that are deficient and prevent EPA from granting a full approval of the SIP revision. *Processing of State Implementation Plan (SIP) Revisions,* EPA Memorandum from John Calcagni, Director, Air Quality Management Division, OAQPS, to Air Division Directors, EPA Regional Offices I–X, September 7, 1992, (1992 Calcagni Memorandum) located at *http://www.epa.gov/ttn/caaa/t1/memoranda/siproc.pdf.*

[3] Visual range is the greatest distance, in kilometers or miles, at which a dark object can be viewed against the sky.

[4] Areas designated as mandatory Class I areas consist of national parks exceeding 6,000 acres, wilderness areas and national memorial parks exceeding 5,000 acres, and all international parks that were in existence on August 7, 1977. *See* 42 U.S.C. 7472(a). In accordance with section 169A of the CAA, EPA, in consultation with the Department of Interior, promulgated a list of 156 areas where visibility is identified as an important value. *See* 44 FR 69122 (November 30, 1979). The extent of a mandatory Class I area includes subsequent changes in boundaries, such as park expansions. *See* 42 U.S.C. 7472(a). Although states and tribes may designate as Class I additional areas which they consider to have visibility as an important value, the requirements of the visibility program set forth in section 169A of the CAA apply only to ''mandatory Class I Federal areas.'' Each mandatory Class I area is the responsibility of a ''Federal Land Manager.'' *See* 42 U.S.C. 7602(i). When the term ''Class I area'' is used in this action, it means a ''mandatory Class I Federal area.''

of Columbia, and the Virgin Islands.[5] 40 CFR 51.308(b) requires states to submit the first implementation plan addressing regional haze visibility impairment no later than December 17, 2007.

C. Roles of Agencies in Addressing Regional Haze

Successful implementation of the regional haze program will require long-term regional coordination among states, tribal governments and various Federal agencies. As noted above, pollution affecting the air quality in Class I areas can be transported over long distances, even hundreds of kilometers. Therefore, to effectively address the problem of visibility impairment in Class I areas, states need to develop strategies in coordination with one another, taking into account the effect of emissions from one jurisdiction on the air quality in another.

Because the pollutants that lead to regional haze can originate from sources located across broad geographic areas, EPA has encouraged the states and tribes across the United States to address visibility impairment from a regional perspective. Five regional planning organizations (RPOs) were developed to address regional haze and related issues. The RPOs first evaluated technical information to better understand how their states and tribes impact Class I areas across the country, and then pursued the development of regional strategies to reduce emissions of particulate matter (PM) and other pollutants leading to regional haze.

The Visibility Improvement State and Tribal Association of the Southeast (VISTAS) RPO is a collaborative effort of state governments, tribal governments, and various Federal agencies established to initiate and coordinate activities associated with the management of regional haze, visibility and other air quality issues in the southeastern United States. Member state and tribal governments include: Alabama, Florida, Georgia, Kentucky, Mississippi, North Carolina, South Carolina, Tennessee, Virginia, West Virginia, and the Eastern Band of the Cherokee Indians.

[5] Albuquerque/Bernalillo County in New Mexico must also submit a regional haze SIP to completely satisfy the requirements of section 110(a)(2)(D) of the CAA for the entire State of New Mexico under the New Mexico Air Quality Control Act (section 74–2–4).

III. What are the requirements for the regional haze SIPs?

A. The CAA and the RHR

Regional haze SIPs must assure reasonable progress toward the national goal of achieving natural visibility conditions in Class I areas. Section 169A of the CAA and EPA's implementing regulations require states to establish long-term strategies for making reasonable progress toward meeting this goal. Implementation plans must also give specific attention to certain stationary sources that were in existence on August 7, 1977, but were not in operation before August 7, 1962, and require these sources, where appropriate, to install BART controls for the purpose of eliminating or reducing visibility impairment. The specific regional haze SIP requirements are discussed in further detail below.

B. Determination of Baseline, Natural, and Current Visibility Conditions

The RHR establishes the deciview as the principal metric or unit for expressing visibility. This visibility metric expresses uniform changes in haziness in terms of common increments across the entire range of visibility conditions, from pristine to extremely hazy conditions. Visibility expressed in deciviews is determined by using air quality measurements to estimate light extinction and then transforming the value of light extinction using a logarithm function. The deciview is a more useful measure for tracking progress in improving visibility than light extinction itself because each deciview change is an equal incremental change in visibility perceived by the human eye. Most people can detect a change in visibility at one deciview.[6]

The deciview is used in expressing RPGs (which are interim visibility goals towards meeting the national visibility goal), defining baseline, current, and natural conditions, and tracking changes in visibility. The regional haze SIPs must contain measures that ensure ''reasonable progress'' toward the national goal of preventing and remedying visibility impairment in Class I areas caused by anthropogenic air pollution by reducing anthropogenic emissions that cause regional haze. The national goal is a return to natural conditions, i.e., anthropogenic sources of air pollution would no longer impair visibility in Class I areas.

[6] The preamble to the RHR provides additional details about the deciview. *See* 64 FR 35714, 35725 (July 1, 1999).

To track changes in visibility over time at each of the 156 Class I areas covered by the visibility program (40 CFR 81.401–437), and as part of the process for determining reasonable progress, states must calculate the degree of existing visibility impairment at each Class I area at the time of each regional haze SIP submittal and periodically review progress every five years, i.e., midway through each 10-year implementation period. To do this, the RHR requires states to determine the degree of impairment (in deciviews) for the average of the 20 percent least impaired (''best'') and 20 percent most impaired (''worst'') visibility days over a specified time period at each of their Class I areas. In addition, states must also develop an estimate of natural visibility conditions for the purpose of comparing progress toward the national goal. Natural visibility is determined by estimating the natural concentrations of pollutants that cause visibility impairment and then calculating total light extinction based on those estimates. EPA has provided guidance to states regarding how to calculate baseline, natural, and current visibility conditions in documents titled, EPA's *Guidance for Estimating Natural Visibility Conditions Under the Regional Haze Rule,* September 2003, (EPA–454/B–03–005 located at *http://www.epa.gov/ttncaaa1/t1/memoranda/rh_envcurhr_gd.pdf*), (hereinafter referred to as ''EPA's 2003 Natural Visibility Guidance''), and *Guidance for Tracking Progress Under the Regional Haze Rule,* September 2003, (EPA–454/B–03–004 located at *http://www.epa.gov/ttncaaa1/t1/memoranda/rh_tpurhr_gd.pdf*), (hereinafter referred to as ''EPA's 2003 Tracking Progress Guidance'').

For the first regional haze SIPs that were due by December 17, 2007, ''baseline visibility conditions'' were the starting points for assessing ''current'' visibility impairment. Baseline visibility conditions represent the degree of visibility impairment for the 20 percent least impaired days and 20 percent most impaired days for each calendar year from 2000 to 2004. Using monitoring data for 2000 through 2004, states are required to calculate the average degree of visibility impairment for each Class I area, based on the average of annual values over the five-year period. The comparison of initial baseline visibility conditions to natural visibility conditions indicates the amount of improvement necessary to attain natural visibility, while the future comparison of baseline conditions to the then current conditions will indicate the amount of progress made. In general, the

2000–2004 baseline period is considered the time from which improvement in visibility is measured.

C. Determination of Reasonable Progress Goals (RPGs)

The vehicle for ensuring continuing progress toward achieving the natural visibility goal is the submission of a series of regional haze SIPs from the states that establish two RPGs (i.e., two distinct goals, one for the ''best'' and one for the ''worst'' days) for every Class I area for each (approximately) 10-year implementation period. The RHR does not mandate specific milestones or rates of progress, but instead calls for states to establish goals that provide for ''reasonable progress'' toward achieving natural (i.e., ''background'') visibility conditions. In setting RPGs, states must provide for an improvement in visibility for the most impaired days over the (approximately) 10-year period of the SIP, and ensure no degradation in visibility for the least impaired days over the same period.

States have significant discretion in establishing RPGs, but are required to consider the following factors established in section 169A of the CAA and in EPA's RHR at 40 CFR 51.308(d)(1)(i)(A): (1) The costs of compliance; (2) the time necessary for compliance; (3) the energy and non-air quality environmental impacts of compliance; and (4) the remaining useful life of any potentially affected sources. States must demonstrate in their SIPs how these factors are considered when selecting the RPGs for the best and worst days for each applicable Class I area. States have considerable flexibility in how they take these factors into consideration, as noted in EPA's *Guidance for Setting Reasonable Progress Goals Under the Regional Haze Program* (''EPA's Reasonable Progress Guidance''), July 1, 2007, memorandum from William L. Wehrum, Acting Assistant Administrator for Air and Radiation, to EPA Regional Administrators, EPA Regions 1–10 (pp. 4–2, 5–1). In setting the RPGs, states must also consider the rate of progress needed to reach natural visibility conditions by 2064 (referred to as the ''uniform rate of progress'' or the ''glidepath'') and the emissions reduction measures needed to achieve that rate of progress over the 10-year period of the SIP. Uniform progress towards achievement of natural conditions by the year 2064 represents a rate of progress which states are to use for analytical comparison to the amount of progress they expect to achieve. In setting RPGs, each state with one or more Class I areas (''Class I state'') must also consult with potentially ''contributing states,'' i.e., other nearby states with emissions sources that may be affecting visibility impairment at the Class I state's areas. *See* 40 CFR 51.308(d)(1)(iv).

D. Best Available Retrofit Technology (BART)

Section 169A of the CAA directs states to evaluate the use of retrofit controls at certain larger, often uncontrolled, older stationary sources in order to address visibility impacts from these sources. Specifically, section 169A(b)(2)(A) of the CAA requires states to revise their SIPs to contain such measures as may be necessary to make reasonable progress towards the natural visibility goal, including a requirement that certain categories of existing major stationary sources [7] built between 1962 and 1977 procure, install, and operate the ''Best Available Retrofit Technology'' as determined by the state. Under the RHR, states are directed to conduct BART determinations for such ''BART-eligible'' sources that may be anticipated to cause or contribute to any visibility impairment in a Class I area. Rather than requiring source-specific BART controls, states also have the flexibility to adopt an emissions trading program or other alternative program as long as the alternative provides greater reasonable progress towards improving visibility than BART.

On July 6, 2005, EPA published the *Guidelines for BART Determinations Under the Regional Haze Rule* at Appendix Y to 40 CFR part 51 (hereinafter referred to as the ''BART Guidelines'') to assist states in determining which of their sources should be subject to the BART requirements and in determining appropriate emissions limits for each applicable source. In making a BART determination for a fossil fuel-fired electric generating plant with a total generating capacity in excess of 750 megawatts (MW), a state must use the approach set forth in the BART Guidelines. A state is encouraged, but not required, to follow the BART Guidelines in making BART determinations for other types of sources.

States must address all visibility-impairing pollutants emitted by a source in the BART determination process. The most significant visibility impairing pollutants are SO_2, NO_X, and PM. EPA has stated that states should use their best judgment in determining whether VOC or NH_3 compounds impair visibility in Class I areas.

Under the BART Guidelines, states may select an exemption threshold value for their BART modeling, below which a BART-eligible source would not be expected to cause or contribute to visibility impairment in any Class I area. The state must document this exemption threshold value in the SIP and must state the basis for its selection of that value. Any source with emissions that model above the threshold value would be subject to a BART determination review. The BART Guidelines acknowledge varying circumstances affecting different Class I areas. States should consider the number of emissions sources affecting the Class I areas at issue and the magnitude of the individual sources' impacts. Any exemption threshold set by the state should not be higher than 0.5 deciview.

In their SIPs, states must identify potential BART sources, described as ''BART-eligible sources'' in the RHR, and document their BART control determination analyses. In making BART determinations, section 169A(g)(2) of the CAA requires that states consider the following factors: (1) The costs of compliance, (2) the energy and non-air quality environmental impacts of compliance, (3) any existing pollution control technology in use at the source, (4) the remaining useful life of the source, and (5) the degree of improvement in visibility which may reasonably be anticipated to result from the use of such technology. States are free to determine the weight and significance to be assigned to each factor.

A regional haze SIP must include source-specific BART emissions limits and compliance schedules for each source subject to BART. Once a state has made its BART determination, the BART controls must be installed and in operation as expeditiously as practicable, but no later than five years after the date of EPA approval of the regional haze SIP. *See* CAA section 169(g)(4)); *see* 40 CFR 51.308(e)(1)(iv). In addition to what is required by the RHR, general SIP requirements mandate that the SIP must also include all regulatory requirements related to monitoring, recordkeeping, and reporting for the BART controls on the source.

As noted above, the RHR allows states to implement an alternative program in lieu of BART so long as the alternative program can be demonstrated to achieve greater reasonable progress toward the national visibility goal than would BART. Under regulations issued in 2005

[7] The set of ''major stationary sources'' potentially subject to BART is listed in CAA section 169A(g)(7).

revising the regional haze program, EPA made just such a demonstration for CAIR. *See* 70 FR 39104 (July 6, 2005). EPA's regulations provide that states participating in the CAIR cap-and trade program under 40 CFR part 96 pursuant to an EPA-approved CAIR SIP or which remain subject to the CAIR Federal Implementation Plan in 40 CFR part 97 need not require affected BART-eligible electrical generating (EGUs) to install, operate, and maintain BART for emissions of SO_2 and NO_X. *See* 40 CFR 51.308(e)(4). Because CAIR did not address direct emissions of PM, states were still required to conduct a BART analysis for PM emissions from EGUs subject to BART for that pollutant. Challenges to CAIR, however, resulted in the remand of the rule to EPA. *See North Carolina* v. *EPA,* 550 F.3d 1175 (DC Cir. 2008).

EPA issued a new rule in 2011 to address the interstate transport of NO_X and SO_2 in the eastern United States. *See* 76 FR 48208 (August 8, 2011) (''the Transport Rule,'' also known as the Cross-State Air Pollution Rule). On December 30, 2011, EPA proposed to find that the trading programs in the Transport Rule would achieve greater reasonable progress towards the national goal than would BART in the states in which the Transport Rule applies. *See* 76 FR 82219. Based on this proposed finding, EPA also proposed to revise the RHR to allow states to substitute participation in the trading programs under the Transport Rule for source-specific BART. EPA has not yet taken final action on that rule. Also on December 30, 2011, the DC Circuit issued an order addressing the status of the Transport Rule and CAIR in response to motions filed by numerous parties seeking a stay of the Transport Rule pending judicial review. In that order, the D.C. Circuit stayed the Transport Rule pending the court's resolutions of the petitions for review of that rule in *EME Homer Generation, L.P.* v. *EPA* (No. 11–1302 and consolidated cases). The court also indicated that EPA is expected to continue to administer CAIR in the interim until the court rules on the petitions for review of the Transport Rule.

E. Long-Term Strategy (LTS)

Consistent with the requirement in section 169A(b) of the CAA that states include in their regional haze SIP a 10 to 15 year strategy for making reasonable progress, section 51.308(d)(3) of the RHR requires that states include a LTS in their regional haze SIPs. The LTS is the compilation of all control measures a state will use during the implementation period of the specific SIP submittal to meet applicable RPGs. The LTS must include ''enforceable emissions limitations, compliance schedules, and other measures as necessary to achieve the reasonable progress goals'' for all Class I areas within, or affected by emissions from, the state. *See* 40 CFR 51.308(d)(3).

When a state's emissions are reasonably anticipated to cause or contribute to visibility impairment in a Class I area located in another state, the RHR requires the impacted state to coordinate with the contributing states in order to develop coordinated emissions management strategies. *See* 40 CFR 51.308(d)(3)(i). In such cases, the contributing state must demonstrate that it has included, in its SIP, all measures necessary to obtain its share of the emissions reductions needed to meet the RPGs for the Class I area. The RPOs have provided forums for significant interstate consultation, but additional consultations between states may be required to sufficiently address interstate visibility issues. This is especially true where two states belong to different RPOs.

States should consider all types of anthropogenic sources of visibility impairment in developing their LTS, including stationary, minor, mobile, and area sources. At a minimum, states must describe how each of the following seven factors listed below are taken into account in developing their LTS: (1) Emissions reductions due to ongoing air pollution control programs, including measures to address RAVI; (2) measures to mitigate the impacts of construction activities; (3) emissions limitations and schedules for compliance to achieve the RPG; (4) source retirement and replacement schedules; (5) smoke management techniques for agricultural and forestry management purposes including plans as currently exist within the state for these purposes; (6) enforceability of emissions limitations and control measures; and (7) the anticipated net effect on visibility due to projected changes in point, area, and mobile source emissions over the period addressed by the LTS. *See* 40 CFR 51.308(d)(3)(v).

F. Coordinating Regional Haze and Reasonably Attributable Visibility Impairment (RAVI) LTS

As part of the RHR, EPA revised 40 CFR 51.306(c) regarding the LTS for RAVI to require that the RAVI plan must provide for a periodic review and SIP revision not less frequently than every three years until the date of submission of the state's first plan addressing regional haze visibility impairment, which was due December 17, 2007, in accordance with 40 CFR 51.308(b) and (c). On or before this date, the state must revise its plan to provide for review and revision of a coordinated LTS for addressing RAVI and regional haze, and the state must submit the first such coordinated LTS with its first regional haze SIP. Future coordinated LTSs, and periodic progress reports evaluating progress towards RPGs, must be submitted consistent with the schedule for SIP submission and periodic progress reports set forth in 40 CFR 51.308(f) and 51.308(g), respectively. The periodic review of a state's LTS must report on both regional haze and RAVI impairment and must be submitted to EPA as a SIP revision.

G. Monitoring Strategy and Other Implementation Plan Requirements

Section 51.308(d)(4) of the RHR includes the requirement for a monitoring strategy for measuring, characterizing, and reporting of regional haze visibility impairment that is representative of all mandatory Class I areas within the state. The strategy must be coordinated with the monitoring strategy required in section 51.305 for RAVI. Compliance with this requirement may be met through ''participation'' in the IMPROVE network, i.e., review and use of monitoring data from the network. The monitoring strategy is due with the first regional haze SIP, and it must be reviewed every five years. The monitoring strategy must also provide for additional monitoring sites if the IMPROVE network is not sufficient to determine whether RPGs will be met.

The SIP must also provide for the following:

- Procedures for using monitoring data and other information in a state with mandatory Class I areas to determine the contribution of emissions from within the state to regional haze visibility impairment at Class I areas both within and outside the state;
- Procedures for using monitoring data and other information in a state with no mandatory Class I areas to determine the contribution of emissions from within the state to regional haze visibility impairment at Class I areas in other states;
- Reporting of all visibility monitoring data to the Administrator at least annually for each Class I area in the state, and where possible, in electronic format;
- Developing a statewide inventory of emissions of pollutants that are reasonably anticipated to cause or contribute to visibility impairment in any Class I area. The inventory must include emissions for a baseline year,

emissions for the most recent year for which data are available, and estimates of future projected emissions. A state must also make a commitment to update the inventory periodically; and

• Other elements, including reporting, recordkeeping, and other measures necessary to assess and report on visibility.

The RHR requires control strategies to cover an initial implementation period extending to the year 2018, with a comprehensive reassessment and revision of those strategies, as appropriate, every 10 years thereafter. Periodic SIP revisions must meet the core requirements of section 51.308(d) with the exception of BART. The requirement to evaluate sources for BART applies only to the first regional haze SIP. Facilities subject to BART must continue to comply with the BART provisions of section 51.308(e), as noted above. Periodic SIP revisions will assure that the statutory requirement of reasonable progress will continue to be met.

H. Consultation With States and Federal Land Managers (FLMs)

The RHR requires that states consult with FLMs before adopting and submitting their SIPs. *See* 40 CFR 51.308(i). States must provide FLMs an opportunity for consultation, in person and at least 60 days prior to holding any public hearing on the SIP. This consultation must include the opportunity for the FLMs to discuss their assessment of impairment of visibility in any Class I area and to offer recommendations on the development of the RPGs and on the development and implementation of strategies to address visibility impairment. Further, a state must include in its SIP a description of how it addressed any comments provided by the FLMs. Finally, a SIP must provide procedures for continuing consultation between the state and FLMs regarding the state's visibility protection program, including development and review of SIP revisions, five-year progress reports, and the implementation of other programs having the potential to contribute to impairment of visibility in Class I areas.

IV. What is EPA's analysis of Georgia's regional haze submittal?

On February 11, 2010, GA EPD submitted revisions to the Georgia SIP to address regional haze in the State's Class I areas as required by EPA's RHR. The State supplemented this February 2010 submittal on November 19, 2010, with title V permit amendments that contain emissions limitations for three facilities.

A. Affected Class I Areas

Georgia has three Class I areas within its borders: Cohutta Wilderness Area, Okefenokee Wilderness Area, and Wolf Island Wilderness Area. Georgia is responsible for developing a regional haze SIP that addresses these Class I areas and for consulting with other states that impact Georgia's Class I areas.

The Georgia regional haze SIP establishes RPGs for visibility improvement at each of these Class I areas and a LTS to achieve those RPGs within the first regional haze implementation period ending in 2018. In developing the LTS for each area, Georgia considered both emissions sources inside and outside of Georgia that may cause or contribute to visibility impairment in Georgia's Class I areas. The State also identified and considered emissions sources within Georgia that may cause or contribute to visibility impairment in Class I areas in neighboring states as required by 40 CFR 51.308(d)(3). The VISTAS RPO worked with the State in developing the technical analyses used to make these determinations, including state-by-state contributions to visibility impairment in specific Class I areas, which included the three areas in Georgia and those areas affected by emissions from Georgia.

B. Determination of Baseline, Natural, and Current Visibility Conditions

As required by the RHR and in accordance with EPA's 2003 Natural Visibility Guidance, Georgia calculated baseline/current and natural visibility conditions for each of its Class I areas, as summarized below (and as further described in sections III.B.1 and III.B.2 of EPA's TSD to this **Federal Register** action).

1. Estimating Natural Visibility Conditions

Natural background visibility, as defined in EPA's 2003 Natural Visibility Guidance, is estimated by calculating the expected light extinction using default estimates of natural concentrations of fine particle components adjusted by site-specific estimates of humidity. This calculation uses the IMPROVE equation, which is a formula for estimating light extinction from the estimated natural concentrations of fine particle components (or from components measured by the IMPROVE monitors). As documented in EPA's 2003 Natural Visibility Guidance, EPA allows states to use ''refined'' or alternative approaches to 2003 EPA guidance to estimate the values that characterize the natural visibility conditions of the Class I areas. One alternative approach is to develop and justify the use of alternative estimates of natural concentrations of fine particle components. Another alternative is to use the ''new IMPROVE equation'' that was adopted for use by the IMPROVE Steering Committee in December 2005.[8] The purpose of this refinement to the ''old IMPROVE equation'' is to provide more accurate estimates of the various factors that affect the calculation of light extinction. Georgia opted to use the default estimates for the natural concentrations combined with the ''new IMPROVE equation'' for all of its areas. Using this approach, natural visibility conditions using the new IMPROVE equation were calculated separately for each Class I area by VISTAS.

The new IMPROVE equation takes into account the most recent review of the science[9] and it accounts for the effect of particle size distribution on light extinction efficiency of sulfate, nitrate, and organic carbon. It also adjusts the mass multiplier for organic carbon (particulate organic matter) by increasing it from 1.4 to 1.8. New terms are added to the equation to account for light extinction by sea salt and light absorption by gaseous nitrogen dioxide. Site-specific values are used for Rayleigh scattering (scattering of light due to atmospheric gases) to account for the site-specific effects of elevation and temperature. Separate relative humidity

[8] The IMPROVE program is a cooperative measurement effort governed by a steering committee composed of representatives from Federal agencies (including representatives from EPA and the FLMs) and RPOs. The IMPROVE monitoring program was established in 1985 to aid the creation of Federal and state implementation plans for the protection of visibility in Class I areas. One of the objectives of IMPROVE is to identify chemical species and emissions sources responsible for existing anthropogenic visibility impairment. The IMPROVE program has also been a key participant in visibility-related research, including the advancement of monitoring instrumentation, analysis techniques, visibility modeling, policy formulation and source attribution field studies.

[9] The science behind the revised IMPROVE equation is summarized in numerous published papers. See, e.g., Hand, J.L., and Malm, W.C., 2006, *Review of the IMPROVE Equation for Estimating Ambient Light Extinction Coefficients—Final Report.* March 2006. Prepared for Interagency Monitoring of Protected Visual Environments (IMPROVE), Colorado State University, Cooperative Institute for Research in the Atmosphere, Fort Collins, Colorado. *http://vista.cira.colostate.edu/improve/publications/GrayLit/016_IMPROVEeqReview/IMPROVEeqReview.htm*; and Pitchford, Marc., 2006, *Natural Haze Levels II: Application of the New IMPROVE Algorithm to Natural Species Concentrations Estimates.* Final Report of the Natural Haze Levels II Committee to the RPO Monitoring/Data Analysis Workgroup. September 2006 *http://vista.cira.colostate.edu/improve/Publications/GrayLit/029_NaturalCondII/naturalhazelevelsIIreport.ppt.*

enhancement factors are used for small and large size distributions of ammonium sulfate and ammonium nitrate and for sea salt. The terms for the remaining contributors, elemental carbon (light-absorbing carbon), fine soil, and coarse mass terms, do not change between the original and new IMPROVE equations.

2. Estimating Baseline Conditions

GA EPD estimated baseline visibility conditions at the Georgia Class I areas using available monitoring data from two IMPROVE monitoring sites, one in the Okefenokee Wilderness Area and the other in the Cohutta Wilderness Area. The Wolf Island Wilderness Area does not contain an IMPROVE monitor. In cases where onsite monitoring is not available, 40 CFR 51.308(d)(2)(i) requires states to use the most representative monitoring available for the 2000–2004 period to establish baseline visibility conditions, in consultation with EPA. Georgia used, and EPA concurs, with the use of 2000–2004 data from the IMPROVE monitor at the Okefenokee Wilderness Area for the Wolf Island Wilderness Area. The IMPROVE Steering Committee considers the IMPROVE monitor at the Okefenokee Wilderness Area to be representative of visibility at Wolf Island. Okefenokee is the nearest Class I area to Wolf Island, and they possess similar characteristics, such as meteorology and topography.

As explained in section III.B, baseline visibility conditions are the same as current conditions for the first regional haze SIP. A five-year average of the 2000 to 2004 monitoring data was calculated for each of the 20 percent worst and 20 percent best visibility days at each Georgia Class I area. IMPROVE data records for Okefenokee for the period 2000 to 2004 meet the EPA requirements for data completeness.[10] IMPROVE data for Cohutta did not meet completeness criteria in the years 2000, 2001, and 2003. Data records for 2001 and 2003 were filled using data substitution procedures.[11] There was too little data in 2000 to perform data filling.

Appendix B.1 of the Georgia regional haze SIP lists the 20 percent best and worst days for the baseline period of 2000–2004 for the Okefenokee and Cohutta areas. This data is also provided at the following Web site: *http://www.metro4-sesarm.org/vistas/SesarmBext_20BW.htm*.

3. Summary of Baseline and Natural Conditions

For the Georgia Class I areas, baseline visibility conditions on the 20 percent worst days range between approximately 27 and 30.5 deciviews. Natural visibility in these areas is predicted to be between approximately 10.5 and 11.5 deciviews on the 20 percent worst days. The natural and baseline conditions for Georgia's Class I areas for both the 20 percent worst and best days are presented in Table 1 below.

TABLE 1—NATURAL BACKGROUND AND BASELINE CONDITIONS FOR GEORGIA'S CLASS I AREAS

Class I area	Average for 20 percent worst days (dv[12])	Average for 20 percent best days (dv)
Natural Background Conditions		
Cohutta Wilderness Area	10.78	4.32
Okefenokee Wilderness Area	11.21	5.31
Wolf Island Wilderness Area	11.21	5.31
Baseline Visibility Conditions (2000–2004)		
Cohutta Wilderness Area	30.25	13.77
Okefenokee Wilderness Area	27.13	15.23
Wolf Island Wilderness Area	27.13	15.23

4. Uniform Rate of Progress

In setting the RPGs, Georgia considered the uniform rate of progress needed to reach natural visibility conditions by 2064 (''glidepath'') and the emissions reduction measures needed to achieve that rate of progress over the period of the SIP to meet the requirements of 40 CFR 51.308(d)(1)(i)(B). As explained in EPA's Reasonable Progress Guidance document, the uniform rate of progress is not a presumptive target, and RPGs may be greater than, less than, or equivalent to the glidepath.

The State's implementation plan presents two sets of graphs, one for the 20 percent best days, and one for the 20 percent worst days, for its three Class I areas. Georgia constructed the graph for the worst days (i.e., the glidepath) in accordance with EPA's 2003 Tracking Progress Guidance by plotting a straight graphical line from the baseline level of visibility impairment for 2000–2004 to the level of visibility conditions representing no anthropogenic impairment in 2064 for its three areas. For the best days, the graph includes a horizontal, straight line spanning from baseline conditions in 2004 out to 2018 to depict no degradation in visibility over the implementation period of the SIP. Georgia's SIP shows that the State's RPGs for its areas provide for improvement in visibility for the 20 percent worst days over the period of the implementation plan and ensure no degradation in visibility for the 20 percent best days over the same period, in accordance with 40 CFR 51.308(d)(1).

For the Cohutta Class I area, the overall visibility improvement necessary to reach natural conditions is the difference between baseline visibility of 30.25 deciviews for the 20 percent worst days and natural conditions of 10.78 deciviews, i.e., 19.47 deciviews. Over the 60-year period from 2004 to 2064, this would require an average improvement of 0.325 deciviews per year to reach natural conditions. Hence, for the 14-year period from 2004 to 2018, in order to achieve visibility improvements at least equivalent to the uniform rate of progress for the 20 percent worst days at the Cohutta Wilderness Area, Georgia would need to project at least 4.55

[10] EPA's 2003 Tracking Progress Guidance, page 2–8.

[11] *Ibid.*

[12] The term, ''dv,'' is the abbreviation for ''deciview.''

deciviews (approximately) over the first implementation period (i.e., 0.325 deciviews × 14 years = 4.55 deciviews) of visibility improvement from the 30.25 deciviews baseline in 2004, resulting in visibility levels at or below approximately 25.7 deciviews in 2018. As discussed below in section IV.C.7, ''Reasonable Progress Goals,'' Georgia projects a 7.45 deciview improvement to visibility in the Cohutta Wilderness Area from the 30.25 deciview baseline to 22.8 deciviews in 2018 for the 20 percent most impaired days, and a 2.02 deciview improvement to 11.75 deciviews from the baseline visibility of 13.77 deciviews for the 20 percent least impaired days.

For the Okefenokee and Wolf Island Class I areas, the overall visibility improvement necessary to reach natural conditions is the difference between baseline visibility of 27.13 deciviews for the 20 percent worst days and natural conditions of 11.21 deciviews, i.e., 15.92 deciviews. Over the 60-year period from 2004 to 2064, this would require an average improvement of 0.265 deciviews per year to reach natural conditions. Hence, for the 14-year period from 2004 to 2018, in order to achieve visibility improvements at least equivalent to the uniform rate of progress for the 20 percent worst days at the Okefenokee and Wolf Island Wilderness Areas, Georgia would need to project at least 3.71 deciviews (approximately) over the first implementation period (i.e., 0.265 deciviews × 14 years = 3.71 deciviews) of visibility improvement from the 27.13 deciviews baseline in 2004, resulting in visibility levels at or below 23.42 deciviews in 2018. As discussed below in section IV.C.7, ''Reasonable Progress Goals,'' Georgia projects a 3.31 deciview improvement to visibility for the Okefenokee and Wolf Island Class I areas from the 27.13 deciview baseline to 23.82 deciviews in 2018 for the 20 percent most impaired days, and a 1.31 deciview improvement to 13.92 deciviews from the baseline visibility of 15.23 deciviews for the 20 percent least impaired days.

C. Long-Term Strategy/Strategies

As described in section III.E of this action, the LTS is a compilation of state-specific control measures relied on by the state for achieving its RPGs. Georgia's LTS for the first implementation period addresses the emissions reductions from Federal, state, and local controls that take effect in the State from the end of the baseline period starting in 2004 until 2018. The Georgia LTS was developed by the State, in coordination with the VISTAS RPO, through an evaluation of the following components: (1) Identification of the emissions units within Georgia and in surrounding states that likely have the largest impacts currently on visibility at the State's three Class I areas; (2) estimation of emissions reductions for 2018 based on all controls required or expected under Federal and state regulations for the 2004–2018 period (including BART); (3) comparison of projected visibility improvement with the uniform rate of progress for the State's Class I areas; and (4) application of the four statutory factors in the reasonable progress analysis for the identified emissions units to determine if additional reasonable controls were required.

In a separate action proposing limited disapproval of the regional haze SIPs of a number of states, EPA noted that these states relied on the trading programs of CAIR to satisfy the BART requirement and the requirement for a LTS sufficient to achieve the state-adopted RPGs. *See* 76 FR 82219 (December 30, 2011). In that action, EPA proposed a limited disapproval of Georgia's regional haze SIP submittal insofar as the SIP relied on CAIR. For that reason, EPA is not taking action on that aspect of Georgia's regional haze SIP in this rulemaking. Comments on the December 30, 2011, proposed determination are accepted at Docket ID No. EPA–HQ–OAR–2011–0729. The comment period for EPA's December 30, 2011, proposed rulemaking is scheduled to end on February 28, 2012.

1. Emissions Inventory for 2018 With Federal and State Control Requirements

The emissions inventory used in the regional haze technical analyses was developed by VISTAS with assistance from Georgia. The 2018 emissions inventory was developed by projecting 2002 emissions and applying reductions expected from Federal and state regulations affecting the emissions of VOC and the visibility-impairing pollutants NO_X, PM, and SO_2. The BART Guidelines direct states to exercise judgment in deciding whether VOC and NH_3 impair visibility in their Class I area(s). As discussed further in section IV.C.3, VISTAS performed modeling sensitivity analyses, which demonstrated that anthropogenic emissions of VOC and NH_3 do not significantly impair visibility in the VISTAS region. Thus, while emissions inventories were also developed for NH_3 and VOC, and applicable Federal VOC reductions were incorporated into Georgia's regional haze analyses, Georgia did not further evaluate NH_3 and VOC emissions sources for potential controls under BART or reasonable progress.

VISTAS developed emissions for five inventory source classifications: stationary point and area sources, off-road and on-road mobile sources, and biogenic sources. Stationary point sources are those sources that emit greater than a specified tonnage per year, depending on the pollutant, with data provided at the facility level. Stationary area sources are those sources whose individual emissions are relatively small, but due to the large number of these sources, the collective emissions from the source category could be significant. VISTAS estimated emissions on a countywide level for the inventory categories of: (a) Stationary area sources; (b) off-road (or non-road) mobile sources (i.e., equipment that can move but does not use roadways); and (c) biogenic sources (which are natural sources of emissions, such as trees). On-road mobile source emissions are estimated by vehicle type and road type, and are summed to the countywide level.

There are many Federal and state control programs being implemented that VISTAS and Georgia anticipate will reduce emissions between the end of the baseline period and 2018. Emissions reductions from these control programs are projected to achieve substantial visibility improvement by 2018 in the Georgia Class I areas. The control programs relied upon by Georgia include: CAIR; Federal 2007 heavy duty diesel (2007) engine standards for on-road trucks and buses; Federal Tier 2 tailpipe controls for on-road vehicles; Federal large spark ignition and recreational vehicle controls; EPA's non-road diesel rules; Georgia Rule 391–3–1–.02(2)(yy), ''Emissions of Nitrogen Oxides from Major Sources'' requiring NO_X reasonably available control technology for subject sources in the Atlanta 1-hour ozone non-attainment area; Georgia Rule 391–3–1–.02(2)(sss), ''Multipollutant Control for Electric Utility Steam Generating Units;'' and NO_X and/or VOC reductions from the control rules in 1-hour ozone SIPs for Atlanta, Birmingham, and Northern Kentucky. Controls from various Federal Maximum Achievable Control Technology (MACT) rules were also utilized in the development of the 2018 emissions inventory projections. These MACT rules include the industrial boiler/process heater MACT (referred to as ''Industrial Boiler MACT''), the combustion turbine and reciprocating internal combustion engines MACTs, and the VOC 2-, 4-, 7-, and 10-year MACT standards.

Effective July 30, 2007, the D.C. Circuit mandated the vacatur and remand of the Industrial Boiler MACT Rule.[13] This MACT was vacated since it was directly affected by the vacatur and remand of the Commercial and Industrial Solid Waste Incinerator Definition Rule. EPA proposed a new Industrial Boiler MACT rule to address the vacatur on June 4, 2010 (75 FR 32006) and issued a final rule on March 21, 2011 (76 FR 15608). The VISTAS modeling included emissions reductions from the vacated Industrial Boiler MACT rule, and Georgia did not redo its modeling analysis when the rule was re-issued. Even though Georgia's modeling is based on the vacated Industrial Boiler MACT limits, the State's modeling conclusions are unlikely to be affected because the expected reductions due to the vacated rule were relatively small compared to the State's total SO_2, $PM_{2.5}$, and coarse particulate matter (PM_{10}) emissions in 2018 (i.e., 0.1 to 0.7 percent, depending on the pollutant, of the projected 2018 SO_2, $PM_{2.5}$, and PM_{10} inventory). Thus, EPA does not expect that differences between the vacated and final Industrial Boiler MACT emissions limits would affect the adequacy of the existing Georgia regional haze SIP. If there is a need to address discrepancies between projected emissions reductions from the vacated Industrial Boiler MACT and the Industrial Boiler MACT issued March 21, 2011 (76 FR 15608), EPA expects Georgia to do so in the State's five-year progress report.

Tables 2 and 3, below, summarize the 2002 baseline and 2018 estimated emissions inventories for Georgia.[14]

TABLE 2—2002 EMISSIONS INVENTORY SUMMARY FOR GEORGIA (TONS PER YEAR (TPY))

	VOC	NO_X	$PM_{2.5}$	PM_{10}	NH_3	SO_2
Point	34,964.3	197,376.9	22,531.7	33,077.3	3,669.2	571,410.9
Area	333,044.8	49,987.4	159,437.8	757,656.1	83,066.0	60,370.2
On-Road Mobile	283,420.6	307,731.7	5,167.8	7,245.9	10,546.2	12,183.5
Off-Road Mobile	85,965.4	97,961.4	8,226.4	8,617.9	60.4	9,005.4
Total	737,395.1	653,057.4	195,363.7	806,597.2	97,341.8	652,970

TABLE 3—2018 EMISSIONS INVENTORY SUMMARY FOR GEORGIA (TPY)

	VOC	NO_X	$PM_{2.5}$	PM_{10}	NH_3	SO_2
Point	43,097.8	125,680.0	36,297.4	48,005.1	6,474.4	127,863.6
Area	353,224.5	55,518.5	180,697.2	944,009.4	102,112.4	62,636.2
On-Road Mobile	109,763.3	102,179.2	2,380.2	4,843.6	14,873.2	1,457.0
Off-Road Mobile	56,760.7	64,578.8	5,729.7	6,015.1	78.6	1,708.8
Total	562,846.3	347,956.5	225,104.5	1,002,873.2	123,538.6	193,665.6

2. Modeling To Support the LTS and Determine Visibility Improvement for Uniform Rate of Progress

VISTAS performed modeling for the regional haze LTS for the 10 southeastern states, including Georgia. The modeling analysis is a complex technical evaluation that began with selection of the modeling system. VISTAS used the following modeling system:

- *Meteorological Model:* The Pennsylvania State University/National Center for Atmospheric Research Mesoscale Meteorological Model is a nonhydrostatic, prognostic meteorological model routinely used for urban- and regional-scale photochemical, $PM_{2.5}$, and regional haze regulatory modeling studies.
- *Emissions Model:* The Sparse Matrix Operator Kernel Emissions modeling system is an emissions modeling system that generates hourly gridded speciated emissions inputs of mobile, non-road mobile, area, point, fire, and biogenic emissions sources for photochemical grid models.
- *Air Quality Model:* The EPA's Models-3/Community Multiscale Air Quality (CMAQ) modeling system is a photochemical grid model capable of addressing ozone, PM, visibility, and acid deposition at a regional scale. The photochemical model selected for this study was CMAQ version 4.5. It was modified through VISTAS with a module for Secondary Organics Aerosols in an open and transparent manner that was also subjected to outside peer review.

CMAQ modeling of regional haze in the VISTAS region for 2002 and 2018 was carried out on a grid of 12x12 kilometer cells that covers the 10 VISTAS states (Alabama, Florida, Georgia, Kentucky, Mississippi, North Carolina, South Carolina, Tennessee, Virginia, West Virginia) and states adjacent to them. This grid is nested within a larger national CMAQ modeling grid of 36x36 kilometer cells that covers the continental United States, portions of Canada and Mexico, and portions of the Atlantic and Pacific Oceans along the east and west coasts. Selection of a representative period of meteorology is crucial for evaluating baseline air quality conditions and projecting future changes in air quality due to changes in emissions of visibility-impairing pollutants. VISTAS conducted an in-depth analysis which resulted in the selection of the entire year of 2002 (January 1–December 31) as the best period of meteorology available for conducting the CMAQ modeling. The VISTAS states modeling was developed consistent with EPA's *Guidance on the Use of Models and Other Analyses for Demonstrating Attainment of Air Quality Goals for Ozone, $PM_{2.5}$, and Regional Haze,* located at *http://www.epa.gov/scram001/guidance/guide/final-03-pm-rh-guidance.pdf*, EPA–454/B–07–002, April 2007, and EPA document, *Emissions Inventory Guidance for Implementation of Ozone and Particulate Matter National Ambient Air*

[13] *See NRDC* v. *EPA,* 489 F.3d 1250 (D.C. Cir. 2007).

[14] Tables 2 and 3 exclude biogenic emissions data provided in the February 2010 Georgia regional haze SIP submittal.

Quality Standards (NAAQS) and Regional Haze Regulations, located at *http://www.epa.gov/ttnchie1/eidocs/eiguid/index.html,* EPA–454/R–05–001, August 2005, updated November 2005 (''EPA's Modeling Guidance'').

VISTAS examined the model performance of the regional modeling for the areas of interest before determining whether the CMAQ model results were suitable for use in the regional haze assessment of the LTS and for use in the modeling assessment. The modeling assessment predicts future levels of emissions and visibility impairment used to support the LTS and to compare predicted, modeled visibility levels with those on the uniform rate of progress. In keeping with the objective of the CMAQ modeling platform, air quality model performance was evaluated using graphical and statistical assessments based on measured ozone, fine particles, and acid deposition from various monitoring networks and databases for the 2002 base year. VISTAS used a diverse set of statistical parameters from the EPA's Modeling Guidance to stress and examine the model and modeling inputs. Once VISTAS determined the model performance to be acceptable, VISTAS used the model to assess the 2018 RPGs using the current and future year air quality modeling predictions, and compared the RPGs to the uniform rate of progress.

In accordance with 40 CFR 51.308(d)(3), the State of Georgia provided the appropriate supporting documentation for all required analyses used to determine the State's LTS. The technical analyses and modeling used to develop the glidepath and to support the LTS are consistent with EPA's RHR and interim and final EPA Modeling Guidance. EPA proposes to accept the VISTAS technical modeling to support the LTS and to determine visibility improvement for the uniform rate of progress because the modeling system was chosen and simulated according to EPA Modeling Guidance. EPA proposes to agree with the VISTAS model performance procedures and results, and that the CMAQ is an appropriate tool for the regional haze assessments for the Georgia LTS and regional haze SIP.

3. Relative Contributions to Visibility Impairment: Pollutants, Source Categories, and Geographic Areas

An important step toward identifying reasonable progress measures is to identify the key pollutants contributing to visibility impairment at each Class I area. To understand the relative benefit of further reducing emissions from different pollutants, source sectors, and geographic areas, VISTAS developed emissions sensitivity model runs using CMAQ to evaluate visibility and air quality impacts from various groups of emissions and pollutant scenarios in the Class I areas on the 20 percent worst visibility days.

Regarding which pollutants are most significantly impacting visibility in the VISTAS region, VISTAS' contribution assessment, based on IMPROVE monitoring data, demonstrated that ammonium sulfate is the major contributor to $PM_{2.5}$ mass and visibility impairment at Class I areas in the VISTAS and neighboring states. On the 20 percent worst visibility days in 2000–2004, ammonium sulfate accounted for 75 to 87 percent of the calculated light extinction at the inland Class I areas in VISTAS, and 69 to 74 percent of the calculated light extinction for all but one of the coastal Class I areas in the VISTAS states. In particular, for the Okefenokee and Cohutta Wilderness Areas, sulfate particles resulting from SO_2 emissions contribute roughly 69 and 84 percent, respectively, to the calculated light extinction on the haziest days. In contrast, ammonium nitrate contributed five percent or less of the calculated light extinction at VISTAS Class I areas on the 20 percent worst visibility days. Particulate organic matter (organic carbon) accounted for 20 percent or less of the light extinction on the 20 percent worst visibility days at the VISTAS Class I areas.

VISTAS grouped its 18 Class I areas into two types, either ''coastal'' or ''inland'' (sometimes referred to as ''mountain'') sites, based on common/similar characteristics (e.g., terrain, geography, meteorology), to better represent variations in model sensitivity and performance within the VISTAS region and to describe the common factors influencing visibility conditions in the two types of Class I areas. The Cohutta Class I area is considered an ''inland'' area and the Okefenokee and Wolf Island Class I areas are both ''coastal'' areas.

Results from VISTAS' emissions sensitivity analyses indicate that sulfate particles resulting from SO_2 emissions are the dominant contributor to visibility impairment on the 20 percent worst days at all Class I areas in VISTAS, including the three Georgia areas. Georgia concluded that reducing SO_2 emissions from EGU and non-EGU point sources in the VISTAS states would have the greatest visibility benefits for the Georgia Class I areas. Because ammonium nitrate is a small contributor to $PM_{2.5}$ mass and visibility impairment on the 20 percent worst days at the inland Class I areas in VISTAS, the benefits of reducing NO_X and NH_3 emissions at these sites are small.

The VISTAS sensitivity analyses show that VOC emissions from biogenic sources such as vegetation also contribute to visibility impairment. However, control of these biogenic sources of VOC would be extremely difficult, if not impossible. The anthropogenic sources of VOC emissions are minor compared to the biogenic sources. Therefore, controlling anthropogenic sources of VOC emissions would have little, if any, visibility benefits at the Class I areas in the VISTAS region, including those in Georgia. The sensitivity analyses also show that reducing primary carbon from point sources, ground level sources, or fires is projected to have small to no visibility benefit at the VISTAS Class I areas.

Georgia considered the factors listed in 40 CFR 51.308(d)(3)(v) and in section III.E of this action to develop its LTS as described below. Georgia, in conjunction with VISTAS, demonstrated in its SIP that elemental carbon (a product of highway and non-road diesel engines, agricultural burning, prescribed fires, and wildfires) and fine soils (a product of construction activities and activities that generate fugitive dust), are relatively minor contributors to visibility impairment at the Class I areas in Georgia. Additionally, the State, in conjunction with VISTAS, demonstrated that the benefits of reducing point source ammonia emissions are small. With regard to area source ammonia emissions, while reducing ammonia emissions would be relatively more beneficial for Georgia's two coastal Class I areas than the Cohutta area, these emissions are primarily from agricultural activity, specifically fertilizing operations and animal farming. The State explains in its SIP that because there are no economically feasible options for controlling these types of area sources of ammonia emissions, and GA EPD does not have regulatory authority to control these sources, Georgia did not further evaluate this source category for control.

Georgia considered agricultural and forestry smoke management techniques to address visibility impacts from elemental carbon. On July 11, 2008, GA EPD entered into a memorandum of understanding with the Georgia Forestry and Georgia Department of Natural Resources Wildlife Resources Division adopting a smoke management program that utilizes basic smoke management practices and addresses the issues laid

out in the EPA's 1998 *Interim Air Quality Policy on Wildland and Prescribed Fires* available at: *http://www.epa.gov/ttncaaa1/t1/memoranda/firefnl.pdf*. With regard to fine soils, the State considered those activities that generate fugitive dust, including construction activities. Georgia's Rules for Air Quality Control include requirements for precautions to prevent fugitive dust from becoming airborne and to limit the opacity of fugitive emissions to less than 20 percent. The requirements of Georgia Rule 391–3–1–.02(n), ''Fugitive Dust,'' include preventive measures for construction activities.

EPA preliminarily concurs with the State's technical demonstration showing that elemental carbon, fine soils, and ammonia are not significant contributors to visibility in the State's Class I areas, and therefore, proposes to find that Georgia has adequately satisfied 40 CFR 51.308(d)(3)(v). EPA's TSD to this **Federal Register** action and Georgia's SIP provide more details on the State's consideration of these factors for Georgia's LTS.

The emissions sensitivity analyses conducted by VISTAS predict that reductions in SO_2 emissions from EGU and non-EGU industrial point sources will result in the greatest improvements in visibility in the Class I areas in the VISTAS region, more than any other visibility-impairing pollutant. Specific to Georgia, the VISTAS sensitivity analysis projects visibility benefits in the Georgia Class I areas and Class I areas outside the State impacted by Georgia sources from SO_2 reductions from EGUs in the VISTAS states. Additional, smaller benefits are projected from SO_2 emissions reductions from non-utility industrial point sources. SO_2 emissions contributions to visibility impairment from other RPO regions are comparatively small in contrast to the VISTAS states' contributions, and thus, controlling sources outside of the VISTAS region is predicted to provide less significant improvements in visibility in the Class I areas in VISTAS.

Taking the VISTAS sensitivity analyses results into consideration, Georgia concluded that reducing SO_2 emissions from EGU and non-EGU point sources in certain VISTAS states would have the greatest visibility benefits for the Georgia Class I areas. The State chose to focus solely on evaluating certain SO_2 sources contributing to visibility impairment to the State's Class I areas for additional emissions reductions for reasonable progress in this first implementation period (described in sections IV.C.4 and IV.C.5 of this action). EPA proposes to agree with the State's analyses and conclusions used to determine the pollutants and source categories that most contribute to visibility impairment in the Georgia Class I areas, and proposes to find the State's approach to focus on developing a LTS that includes largely additional measures for point sources of SO_2 emissions to be appropriate.

SO_2 sources for which it is demonstrated that no additional controls are reasonable in this current implementation period will not be exempted from future assessments for controls in subsequent implementation periods or, when appropriate, from the five-year periodic SIP reviews. In future implementation periods, additional controls on these SO_2 sources evaluated in the first implementation period may be determined to be reasonable, based on a reasonable progress control evaluation, for continued progress toward natural conditions for the 20 percent worst days and to avoid further degradation of the 20 percent best days. Similarly, in subsequent implementation periods, the State may use different criteria for identifying sources for evaluation and may consider other pollutants as visibility conditions change over time.

4. Procedure for Identifying Sources To Evaluate for Reasonable Progress Controls in Georgia and Surrounding Areas

As discussed in section IV.C.3 of this action, through comprehensive evaluations by VISTAS and the Southern Appalachian Mountains Initiative (SAMI),[15] the VISTAS states concluded that sulfate particles resulting from SO_2 emissions account for the greatest portion of the regional haze affecting the Class I areas in VISTAS states, including those in Georgia. Utility and non-utility boilers are the main sources of SO_2 emissions within the southeastern United States. VISTAS developed a methodology for Georgia that enables the State to focus its reasonable progress analysis on those geographic regions and source categories that impact visibility at each of its Class I areas. Recognizing that there was neither sufficient time nor adequate resources available to evaluate all emissions units within a given area of influence (AOI) around each of the Class I areas that Georgia's sources impact, the State established a threshold to determine which emissions units would be evaluated for reasonable progress control. In applying this methodology, GA EPD first calculated the fractional contribution to visibility impairment from all emissions units within the SO_2 AOI for each of its Class I areas, and those surrounding areas in other states potentially impacted by emissions from emissions units in Georgia. The State then identified those emissions units with a contribution of one half (0.5) percent or more to the visibility impairment at that particular Class I area, and evaluated each of these units for control measures for reasonable progress using the following four ''reasonable progress factors'' required under 40 CFR 51.308(d)(1)(i)(A): (i) Cost of compliance; (ii) time necessary for compliance; (iii) energy and non-air quality environmental impacts of compliance; and (iv) remaining useful life of the emissions unit.

Georgia's SO_2 AOI methodology captured greater than 70 percent of the total point source SO_2 contribution to visibility impairment in two of Georgia's three Class I areas and required an evaluation of more than 30 units. At the remaining area, Cohutta Wilderness Area, the 0.5-percent threshold represents 69 percent of the total SO_2 contribution to visibility impairment and required an evaluation of 38 units. Capturing a significantly greater percentage of the total contribution would involve an evaluation of many more emissions units that have substantially less impact. EPA believes the approach developed by VISTAS and implemented for the Class I areas in Georgia is a reasonable methodology to prioritize the most significant contributors to regional haze and to identify sources to assess for reasonable progress control in the State's Class I area. The approach is consistent with EPA's Reasonable Progress Guidance. The technical approach of VISTAS and Georgia was objective and based on several analyses including the evaluation of a large universe of emissions units within and surrounding the State of Georgia and all of the 18 VISTAS Class I areas. It also included an analysis of the VISTAS emissions units affecting nearby Class I areas surrounding the VISTAS states that are located in other RPOs' Class I areas.

[15] Prior to VISTAS, the southern states cooperated in a voluntary regional partnership ''to identify and recommend reasonable measures to remedy existing and prevent future adverse effects from human-induced air pollution on the air quality related values of the Southern Appalachian Mountains.'' States cooperated with FLMs, EPA, industry, environmental organizations, and academia to complete a technical assessment of the impacts of acid deposition, ozone, and fine particles on sensitive resources in the Southern Appalachians. The SAMI Final Report was delivered in August 2002.

5. Application of the Four CAA Factors in the Reasonable Progress Analysis

Under Georgia's state rule 391–3–1–.02(13), ''Clean Air Interstate Rule SO_2 Annual Trading Program,'' SO_2 emissions from Georgia EGUs will be capped at 149,140 tons in 2015, a 70-percent reduction from 2002 actual emissions. GA EPD concluded that additional EGU control for SO_2 during this time period is not reasonable for the EGU sources that contribute greater than 0.5 percent to visibility impairment at Class I areas that are clearly projected to meet or exceed the uniform rate of progress in 2018. However, for five EGUs at three facilities owned by Georgia Power (see Table 4) that meet the State's minimum threshold for reasonable progress evaluation at Class I areas not clearly at or below the glidepath (Okefenokee and Wolf Island Wilderness Areas), GA EPD did consider additional controls.

GA EPD initially identified 24 additional non-EGU emissions units at 13 facilities in Georgia (see Table 4) which meet the State's minimum threshold for a reasonable progress control evaluation (i.e., because they were modeled to fall within the SO_2 AOI of any Class I area and have a 0.5 percent or greater contribution to the sulfate visibility impairment in at least one Class I area).[16] GA EPD later determined, based on updated data, that of these 24 non-EGU units, seven units at four facilities would not contribute 0.5 percent or greater of the total sulfate visibility impairment at any Class I area in 2018 and thus, these seven units were not subject to a reasonable progress control evaluation. In addition, six units at three facilities requested and received emissions limits to reduce the projected sulfate visibility impairment from each emissions unit to less than 0.5 percent. Finally, one of the emissions units is subject to BART review under the RHR. As discussed in EPA's Reasonable Progress Guidance, since the BART analysis is based, in part, on an assessment of many of the same factors that must be addressed in establishing the RPG, EPA believes it is reasonable to conclude that any control requirements imposed in the BART determination also satisfy the RPG-related requirements for source review in the first implementation period.[17] Therefore, reasonable progress control reviews were conducted on the remaining 10 non-EGU emissions units at five facilities and five EGUs at three facilities.

TABLE 4—GEORGIA FACILITIES SUBJECT TO REASONABLE PROGRESS ANALYSIS

Facilities With Emissions Unit(s) Subject to Reasonable Progress Analysis	
	Georgia Pacific—Brunswick Cellulose, Power Boiler 4 (F1), Recovery Boiler R407 (M24).
	Georgia Pacific—Cedar Springs, Power Boilers U500, U501, Recovery Boiler R402.
	Georgia Pacific—Savannah River Mill, Boilers B001, B002, B003.
	Georgia Power—Plant Kraft, Steam Generators (SG) 1, 2, 3.
	Georgia Power—Plant Mitchell, SG 3.
	Georgia Power—Plant McIntosh, SG 1.
	International Paper—Savannah Mill, Power Boiler 13.
	Temple-Inland Rome Linerboard, Power Boiler 4.
Facilities With Emissions Unit(s) Not Subject to Reasonable Progress Analysis	
	Non-EGUs Subject to BART
	Interstate Paper, Power Boiler F1.
	Not Subject to Evaluation Based on Updated Information
	Miller Brewing, Boilers B001, B002.
	Mount Vernon Mills, Boilers E U 03, E U 04.
	Savannah Sugar Refinery, Boiler U161.
	Mohawk Industries, Boilers BL06, BL07.
	Exempted With Additional Emission Limits
	Packaging Corporation of America, C E Boiler.
	Rayonier Performance Fibers—Jessup Mill, Power Boilers 2, 3, Recovery Furnace 1,2.
	Southern States Phosphate and Fertilizer, Sulfuric Acid Plant 2.

A. Facilities with Emissions Unit(s) Subject to Reasonable Progress Analysis

The RHR requires that states consider the following factors and demonstrate how these factors were taken into consideration in selecting the RPGs: costs of compliance; time necessary for compliance; energy and non-air quality environmental impacts of compliance; and remaining useful life of any potentially-affected sources. As stated previously, GA EPD performed reasonable progress control analyses for 15 emissions units. The results of GA EPD's analyses are summarized below, followed by EPA's assessment.

1. Georgia Pacific—Brunswick Cellulose

(a). Power Boiler 4 (F1)

Georgia Pacific's Brunswick Cellulose facility is located in Glynn County near the Georgia coast. Power Boiler No. 4 is an 800 million British thermal units per hour (MMBtu/hr) boiler that burns primarily No. 6 fuel oil and wood waste, including bark. The boiler is also permitted to burn tire-derived fuel (TDF) and wastewater treatment sludge. The sulfur content of the fuel oil is three percent or less.

Power Boiler 4 at the Brunswick Cellulose facility meets Georgia's minimum threshold for reasonable progress control evaluation. The unit contributes to the total sulfate visibility impairment at two Class I areas (i.e., approximately 12.6 percent at Wolf Island and 3.9 percent at Okefenokee). The State noted in its SIP that these contributions are the highest level of visibility impairment contribution to any Class I area caused by any single emissions unit that GA EPD analyzed. The 2018 projected SO_2 emissions developed by VISTAS are 1,642 tpy. However, the boiler had already

[16] *See* also EPA's TSD, section III.C.2, fractional contribution analysis tables for each Class I area, excerpted from the Georgia SIP, Appendix H.2.

[17] EPA's Reasonable Progress Guidance, pages 4.2–4.3.

reduced emissions to approximately 1,099 tpy due to a 2002 modification achieving higher efficiency.

The reasonable progress control analysis reviewed wet flue gas desulfurization (FGD), in-duct sorbent injection, and a limitation on fuel oil usage coupled with lower sulfur content fuel oil (2.2 percent and 1.0 percent sulfur fuel oil). Of these control measures, the fuel oil changes could take place prior to 2012 and the wet FGD and in-duct sorbent injection could be installed before 2013. The remaining useful life of the unit extends past 2018 and past the control equipment amortization period. The wet FGD would have an impact on water usage and wastewater discharge, and in-duct sorbent injection would result in additional solid waste. The company did not identify any significant energy impacts for any of the options.

Of the control options considered, both in-duct sorbent injection and a switch to 1.0 percent sulfur fuel oil coupled with a five million gallon-per-year oil usage limit were considered reasonably cost effective. The costs are $3,562 per ton of SO_2 removed ($/ton SO_2) and $20.7 million per inverse megameter (MM/Mm-1) at Wolf Island for in-duct sorbent injection, and $3,228/ton SO_2 and $18.8 MM/Mm-1 at Wolf Island for 1.0 percent sulfur fuel oil. These controls were considered cost effective due to the relatively high visibility impact on two Class I areas and the fact that neither of these Class I areas are projected to be clearly at or below the glidepath. Both in-duct sorbent injection and 1.0 percent sulfur fuel oil achieve approximately the same amount of SO_2 emissions reductions (769 tpy for sorbent injection and 731 tpy for 1.0 percent sulfur fuel oil) from the current emissions level of 1,099 tpy SO_2. Implementation of the more cost effective of these two options would reduce SO_2 emissions to 368 tons of SO_2 per 12-consecutive months (i.e., 1,099 tpy − 731 tpy = 368 tpy SO_2).

Supplemental information provided by the facility indicated that the two controls deemed to be reasonable would control emissions from oil combustion but would not affect SO_2 emissions from combustion of wood waste and TDF. The facility requested an allowance for an additional 200 tons of emissions based on calculations of historical emissions from wood waste and TDF. This request was also supported by the facility's assertion that the sulfur content of locally available TDF may be above what has been burned historically. GA EPD concurred with the facility's request and established an SO_2 emissions limit in the facility's title V permit for the power boiler of 568 tpy SO_2 (368 + 200 = 568 tpy) for reasonable progress with a compliance date of 2012. The revised permit is included in Appendix M of the Georgia regional haze submittal.

(b). Recovery Boiler R407 (M24)

Recovery Boiler R407 (M24) contributes approximately 1.3 percent to the total sulfate visibility impairment at the Wolf Island Wilderness Area. The 2018 projected SO_2 emissions are 193 tpy. Georgia Pacific's reasonable progress control analysis found combustion control and wet FGD to be the only technically feasible control options. The company stated that emissions of SO_2 of 38 parts per million (ppm), as measured in a 2006 stack test, are too low of a load for effective operation of a FGD. Therefore, the company ruled out this control technology.

Combustion control, the other technically feasible control option, is already included in the boiler design. Because this emissions unit only contributes to visibility impairment at one Class I area and has a relatively low 2018 projected emissions level, the State determined that no additional controls are required for reasonable progress for the Recovery Boiler R407 at Georgia Pacific—Brunswick Cellulose.

2. Georgia Pacific—Cedar Springs

(a). Power Boiler U500 (''Power Boiler 1'') and Power Boiler U501 (''Power Boiler 2'')

Power Boilers 1 and 2 at the Georgia Pacific—Cedar Springs facility are two nearly identical power boilers. Each of these units contributes approximately 1.1 percent to the total sulfate visibility impairment at the Saint Marks Class I area in Florida. The 2018 projected SO_2 emissions are 1,976 tpy for each boiler.

The reasonable progress control analyses for these units reviewed six options: (1) Wet FGD, (2) addition of spray towers and caustic to the existing venturi scrubbers, (3) adding caustic to the existing venturi scrubbers (resulting in a 79 percent SO_2 reduction), (4) in-duct sorbent injection, (5) coal washing, and (6) coal switching. In addition to these control measures, Georgia Pacific submitted two variations of option 3 as part of their BART exemption modeling request that included the addition of lower amounts of caustic to their existing scrubbers (resulting in approximately a 68 percent and 37 percent SO_2 reduction for these two variations). All of the control options could be installed prior to 2012 except the wet FGD, which could be installed before 2013. All three of the scrubber options (i.e., wet FGD, adding spray towers and caustic to the existing scrubbers, and adding caustic to the existing venturi scrubbers) would generate approximately 15,000 tpy of solid waste. The company did not identify any significant energy impacts associated with the scrubber options. The remaining useful life of the unit extends past 2018 and past the control equipment amortization period.

Out of all the control options considered, adding caustic to the existing venturi scrubber and installing in-duct sorbent injection were considered reasonably cost effective. The costs were $1,675/ton SO_2 and $849.2 MM/Mm-1 at the Saint Marks Class I area for adding caustic to the scrubber, and $1,663/ton SO_2 and $843.2 MM/Mm-1 at the Saint Marks area for in-duct sorbent injection. These figures were considered cost effective even with a relatively low visibility impact on only one Class I area because the Saint Marks area is not clearly at or below the uniform rate of progress. Since the company submitted control options for three different levels of caustic use (resulting in 79 percent, 68 percent, and 37 percent SO_2 reduction), GA EPD analyzed the information to determine which level of caustic use was considered reasonable. In comparison, in-duct sorbent injection achieves approximately 70 percent SO_2 reduction, which is within the range of control efficiencies for caustic scrubbing. GA EPD concluded that a 70 percent SO_2 reduction was reasonable for this unit. As part of Georgia Pacific's BART exemption modeling, the company proposed SO_2 emissions limits to avoid being subject to BART of 135 pounds of SO_2 per hour (lb SO_2/hr) for each power boiler, along with additional SO_2 limits on Recovery Boiler R402 (''Recovery Boiler 3'') as discussed below. The State agreed with this limit of 135 lb SO_2/hr, which would result in maximum annual emissions of 591 tpy of SO_2 (a 70 percent reduction from current emissions), and determined that this limit satisfies reasonable progress. The actual annual reduction is expected to be even higher since the power boilers are not anticipated to emit SO_2 at the maximum allowable level for an entire year. A copy of the revised title V permit is included in Appendix M of the Georgia regional haze SIP submittal.

(b). Recovery Boiler 3

This unit contributes approximately 0.8 percent to the sulfate visibility impairment at the Saint Marks Class I area. The 2018 projected SO_2 emissions are 1,726 tpy. However, the State notes

that Georgia Pacific's 2006 and 2007 SO_2 emissions were significantly lower than this 2018 projected SO_2 emissions level at 462 and 741 tpy SO_2, respectively. The facility accepted a limit of 350 ppm SO_2 on this unit when firing black liquor solids to avoid being subject to BART.

The reasonable progress control analyses reviewed three additional options: (1) Switching from No. 6 residual fuel oil (1.8 percent sulfur) to No. 2 distillate fuel oil (0.5 percent sulfur); (2) switching to lower sulfur No. 6 residual fuel oil (1.0 percent sulfur); and (3) the installation of a new concentrator and new multi-level air system. The company did not provide any indications that any of the control options could not be installed prior to 2012. No negative energy impacts or non-air quality environmental impacts were identified by the company. Remaining useful life of the unit extends past 2018 and past the control equipment amortization periods.

Of the control options considered, none were considered reasonable because their implementation would have a visibility impact of less than 0.01 inverse megameter (Mm-1) on a single Class I area. Therefore, no additional controls were required for reasonable progress for Recovery Boiler 3 at the Georgia Pacific—Cedar Springs facility.

3. Georgia Pacific—Savannah River Mill, Boilers B001, B002, and B003

Boilers B001, B002, and B003 at the Georgia Pacific—Savannah River Mill facility are three relatively similar boilers, with B002 and B003 being almost identical. The emissions units exceed Georgia's minimum threshold for reasonable progress evaluation at one Class I area (approximately 1.1 percent, 0.9 percent, and 0.8 percent of the total sulfate visibility impairment at the Wolf Island Wilderness Area for B001, B002, and B003, respectively). The 2018 projected SO_2 emissions for B001, B002, and B003 are 1,659 tpy, 1,195 tpy, and 1,190 tpy, respectively. All three of these boilers are relatively well controlled, re-circulating fluidized bed boilers with limestone injection in the combustion chamber. B001 currently achieves approximately 87 percent SO_2 removal and Boilers B002 and B003 achieve approximately 90 percent SO_2 removal.

The reasonable progress control analyses reviewed wet FGD, circulating fluidized bed scrubber, switching from petroleum coke to coal, increased limestone injection, and rotating opposed fire air. Of all the proposed changes, only increased limestone injection could occur prior to 2012. All other control measures could not be installed until after 2012, although estimated control dates were not provided. Wet FGD controls would result in increased water use and wastewater discharges. No significant energy impacts were identified by the company. Remaining useful life of the emissions units extended past 2018 and past the control equipment amortization periods. Increased limestone injection would result in increased solid waste generation. Georgia Pacific conducted trial operations with increased limestone injection rates and found that SO_2 removal could only be increased by an additional two percent (from 87 percent to 89 percent for B001 and from 90 percent to 92 percent for B002 and B003). Revised cost estimates were also derived from the trial operations.

Of the control options considered, none were considered reasonable given their low control efficiencies and a visibility impact of less than 0.01 Mm-1 on a single Class I area that would result from their implementation. Therefore, no additional controls were required for reasonable progress.

4. Georgia Power—Plant Kraft, SGs 1, 2, and 3

Emissions units SG 1, 2, and 3 at Georgia Power—Plant Kraft are three coal-fired steam generating units (i.e., boilers) rated at 50, 54, and 104 MW, respectively. Units 1 and 2 each contribute to the total sulfate visibility impairment at the Wolf Island Class I area by approximately 0.5 percent. Unit 3 was initially determined to contribute to the total sulfate visibility impairment at three Class I areas (approximately 3.3 percent at Wolf Island, 0.9 percent at Okefenokee, and 0.8 percent at Cape Romain). However, with projected reductions in SO_2 emissions by 2018, the visibility impacts on Okefenokee and Cape Romain Class I areas from Units 1, 2, and 3 are expected to drop below Georgia's minimum threshold for reasonable progress evaluation, and the visibility impact at Wolf Island should drop below two percent. The 2018 projected SO_2 emissions for Units 1, 2, and 3 were initially estimated by VISTAS at 691 tpy, 704 tpy, and 4,474 tpy, respectively. As part of the supporting documentation for the reasonable progress control analyses, Georgia Power provided projected heat input through 2018 for these units, which indicates that SO_2 emissions for Units 1, 2, and 3 will be 632 tpy, 889 tpy, and 2,455 tpy, respectively. While the heat inputs provided by Georgia Power for Units 1 and 2 are similar to the VISTAS 2018 projections, Georgia Power's projection for Unit 3 represents a 45 percent reduction in heat input and SO_2 emissions from the VISTAS projections. This was explained by Georgia Power as the result of additional capacity coming on-line elsewhere between 2010 and 2017. The reduction in heat input for Plant Kraft is expected to occur around 2015. GA EPD utilized these revised heat inputs in conducting the reasonable progress control analyses, and GA EPD plans to verify the heat input reduction during development of the next regional haze SIP (due in 2018).

The following control measures were analyzed for the four statutory factors for all three units: Wet FGD, coal switching (i.e., using a coal with a lower sulfur content), and coal washing (i.e., mechanically removing pyritic sulfur from powdered coal by a flotation process, which does not separate organic sulfur from the coal). Wet FGD could not be installed until 2016 because of required control device installations scheduled up until 2015 in Georgia Power's system. The company did not address the implementation time for the other control options, so GA EPD assumed the controls could be implemented by January 1, 2012. All three control options would require additional energy usage. Wet FGD and coal washing would result in increased water usage and wastewater discharges as well as additional solid waste generation. The remaining useful life of the units extends past 2018 and past the control equipment amortization periods.

The cost effectiveness of wet FGD and coal switching were \$3,216 to \$8,161/ton SO_2 and \$56.9 MM to \$144.5 MM/Mm-1 for wet FGD and \$4,041 to \$4,306/ton SO_2 and \$71.5 MM/Mm-1 for coal switching. Coal washing cost effectiveness was \$1,839 to \$1,847/ton SO_2 and \$32.5 to \$32.7 MM/Mm-1; the control efficiency is six percent. Regarding non-air environmental impacts, the company indicated that coal washing could possibly reduce boiler efficiency, would use up to 7,500 gallons (at Unit 3) per day of water, would result in acidic wastewater requiring treatment, and would result in coal refuse in the amount of approximately five percent of the total coal consumption. Emissions reductions from these control options are projected to achieve very little visibility improvement at the Wolf Island Wilderness Area.

Based on the control efficiency of coal washing, the negative non-air environmental impacts, and the visibility impact of less than 0.01 Mm-1, the State determined that this control option is not reasonable. The State eliminated coal switching and FGD from

consideration due to the cost effectiveness considerations. Based on the above considerations, no additional controls were required for any of the Georgia Power—Plant Kraft units.

5. Georgia Power—Plant McIntosh, SG 1

Emissions unit SG 1 at Georgia Power—Plant McIntosh is a coal-fired steam generating unit rated at 178 MW. The 2018 projected SO_2 emissions were initially estimated by VISTAS at 7,015 tpy. As part of the supporting documentation for the reasonable progress control analyses, Georgia Power provided projected heat input through 2018 for this unit. Those projections indicate that SO_2 emissions will drop to 1,860 tpy by 2018. Georgia Power's projection represents a 73 percent reduction in heat input and SO_2 emissions. This was explained by Georgia Power as a result of additional capacity coming on line elsewhere between 2010 and 2017. The State initially determined that this unit impacts visibility at five Class I areas (4.1 percent at Wolf Island, 1.2 percent at Okefenokee, 0.6 percent at Saint Marks, 1.5 percent at Cape Romain, and 0.7 percent at Swanquarter). However, with the projected reduction in SO_2 emissions by 2018, the visibility impacts on all of these areas except Wolf Island are expected to drop below Georgia's 0.5 percent evaluation threshold, and the impact at Wolf Island is expected to drop to approximately one percent. The reduction in heat input for Plant McIntosh is to occur between around 2011 and 2016. GA EPD utilized this revised SO_2 emission rate in conducting the reasonable progress control analyses. GA EPD plans to verify the heat input reduction during development of the next regional haze SIP.

Georgia Power analyzed the following control measures: Wet FGD, coal switching, and coal washing. Wet FGD could not be installed until 2016 because required control device installations are scheduled up until 2015 in Georgia Power's system. The company did not address the time necessary for compliance for the other control options so GA EPD assumed the controls could be implemented by January 1, 2012. All three control options would require additional energy usage. Wet FGD and coal washing would result in increased water usage and wastewater discharges as well as additional solid waste generation. The remaining useful life of the units extends past 2018 and past the control equipment amortization periods. The cost effectiveness of all the control operations is $7,131/ton SO_2 and $118.5 MM/Mm-1 for wet FGD, $4,306/ton SO_2 and $71.5 MM/Mm-1 for coal switching, and $5,334/ton SO_2 and $91.9 MM/Mm-1 for coal washing. Based on these factors, GA EPD required no additional controls for SG 1 at Georgia Power's Plant McIntosh.

6. Georgia Power—Plant Mitchell, SG 3

SG 3 at Georgia Power's Plant Mitchell is a coal-fired steam-generating unit rated at 163 MW and is the only remaining operational boiler at Plant Mitchell. The 2018 projected SO_2 emissions were initially estimated by VISTAS at 4,930 tpy. As part of the supporting documentation for the reasonable progress control analyses, Georgia Power provided projected heat input through 2018 for this unit. Those projections indicate that SO_2 emissions will drop to 1,189 tpy by 2018. The State initially determined this unit to impact the total sulfate visibility impairment at two Class I areas at approximately 0.8 percent at the Okefenokee Wilderness Area and approximately 2.7 percent at the Saint Marks Class I area in Florida. However, with the projected reduction in SO_2 emissions by 2018, the visibility impact at Okefenokee is expected to drop below Georgia's 0.5 percent reasonable progress evaluation threshold and the impact on Saint Marks is predicted to drop to below one percent. Georgia Power's projection represents a 76 percent reduction in heat input and SO_2 emissions. This was explained by Georgia Power as a result of additional capacity coming online elsewhere else starting in 2010. The reduction in heat input for Plant Mitchell is to occur between around 2008 and 2010. GA EPD utilized this revised SO_2 emissions rate in conducting the reasonable progress control analyses. GA EPD plans to verify the heat input reduction during the regional haze periodic progress review described in section IV.G of this action.

Georgia Power analyzed wet FGD and coal switching as possible control measures at SG 3. Wet FGD could not be installed until 2016 because required control device installations are scheduled up until 2015 in Georgia Power's system. The company did not address the time necessary for compliance for coal switching so GA EPD assumed this control could be implemented by January 1, 2012. Both control options would require additional energy usage. Georgia Power did not indicate any additional water use, wastewater discharge, or solid waste generation issues for any of the control options. The remaining useful life of the units extends past 2018 and past the control equipment amortization periods. The cost effectiveness for wet FGD was $9,119/ton SO_2 and $148.5 MM/Mm-1, and the cost effectiveness for coal switching was $2,347/ton SO_2 and $38.2 MM/Mm-1; the control efficiency was at 43 percent. Based on these factors, including the projected significant utilization drop within the next few years, Georgia required no additional controls for SG 3 at Georgia Power—Plant Mitchell.

7. International Paper—Savannah Mill, Power Boiler 13

International Paper's Savannah Mill Power Boiler 13 is a 1,280 MMBtu/hr coal, oil, and wood waste-fired boiler. The unit also combusts both low-volume high-concentration (LVHC) and high-volume low-concentration (HVLC) non-condensable gases from the pulping process as well as stripper off-gas (SOG) from the stripper used to control hazardous air pollutant (HAP) emissions from wastewater streams. The 2018 projected SO_2 emissions are 8,578 tpy with approximately 1,944 tpy of this amount coming from the combustion of LVHC, HVLC, and SOG. The State identified this unit as significantly contributing to sulfate visibility impairment at five Class I areas (approximately 6.4 percent at Wolf Island, 1.7 percent at Okefenokee, 0.7 percent at the Saint Marks area in Florida, 1.6 percent at the Cape Romain area in South Carolina, and 0.9 percent at the Swanquarter area in North Carolina). The State noted in its SIP that this is the highest number of Class I areas significantly impacted by any single emissions unit of all those reviewed by Georgia.

The reasonable progress control analysis reviewed the following control options: (1) Wet FGD (packed tower), (2) FGD (wet limestone spray tower), (3) semi-dry lime spray tower, (4) fuel switching to natural gas, (5) dry sorbent injection, and (6) a stand-alone regenerative thermal oxidizer (RTO) with SO_2 scrubbing for the control of LVHC, HVLC, and SOG. The RTO control option was presented as three different options for LVHC, HVLC, and SOG combustion. International Paper also suggested an SO_2 reduction of 2,000 tpy (a reduction in the SO_2 emissions limit from 8,758 tpy to 6,758 tpy) as a control option that would provide maximum flexibility for compliance. Except for the 2,000 tpy SO_2 reduction alternative, all of these control options could be implemented by 2012. International Paper requested a 2016 compliance date for the 2,000 tpy SO_2 reduction alternative in order for the company to take into consideration any reductions that will occur as a result of

the Industrial Boiler MACT and the uncertainty surrounding the final requirements of that standard.

The remaining useful life of the unit extends past 2018 and past the control equipment amortization period. The wet FGD and all three RTO sub-options increased water usage and wastewater discharge. GA EPD evaluated the potential water usage and wastewater discharges associated with these controls. One additional consideration was to ensure that there would be no additional dissolved oxygen load on the Savannah River due to a problem with the dissolved oxygen load in the Savannah River. Because of strict limitations on any additional dissolved oxygen load to the river, any projects that could possibly increase dissolved oxygen load were not considered reasonable at this time. Based on the type of chemicals that would be associated with effluent from a wet FGD (packed tower option) and the semi-dry lime spray tower, GA EPD eliminated these options from further consideration because they could potentially increase dissolved oxygen load. FGD (wet limestone spray tower), semi-dry lime spray tower, and dry sorbent injection also resulted in additional solid waste generation. There were energy impacts associated with all but the fuel switching option. These energy costs were factored into the overall control cost effectiveness.

Regarding the company's cost effectiveness estimates, GA EPD's review indicated that the cost estimates for a packed tower wet FGD and wet FGD limestone spray tower were higher than expected based on the following factors: The costs per actual cubic feet per minute are about four times higher than other units of comparable size, the company's estimate is three to eight times higher than results from EPA cost estimation software, and International Paper used a conservative retrofit factor with a cost estimation model not recommended by EPA. In a letter to International Paper dated December 27, 2007, GA EPD requested site-specific cost analyses for these control options. In that letter, GA EPD stated that if site-specific estimates were not provided, control option recommendations would be made with the understanding that the cost estimates may be overstated. In response, International Paper chose not to provide site-specific cost estimates as requested. GA EPD completed its evaluations and determined that the cost effectiveness of the FGD—wet limestone spray tower ($4,391/ton SO_2) was not cost effective in this case. Wet FGD—packed tower was not considered reasonable because of the possible impact on dissolved oxygen load to the Savannah River. Fuel switching to natural gas ($9,506/ton SO_2), and dry sorbent injection ($5,223/ton SO_2) were determined not to be reasonable because of cost effectiveness.

Another cost effective control option that GA EPD evaluated is an emissions limit of 6,758 tpy SO_2 proposed by the company. The 6,758 tpy SO_2 limit was determined by reducing the projected 2018 SO_2 emissions level of 8,758 tpy SO_2 by 2,000 tons. GA EPD reviewed recent SO_2 emissions data and determined that the projected 8,758 tpy SO_2 level is reasonable. No specific emissions reduction methodologies were associated with this control option. However, certain control methodologies are under consideration. A compliance date of 2016 was proposed in order to take into consideration any controls that will be required under EPA's Industrial Boiler MACT currently under development (discussed in section IV.C.1). A 2016 compliance date should provide sufficient time for the MACT to be proposed and promulgated, provide the three years required for compliance with the standard, and provide time to determine an appropriate method for complying with the 6,758 tpy SO_2 emissions limit for Power Boiler 13 following compliance with this MACT standard.

Of the control options considered, GA EPD determined that the 2,000 tpy SO_2 reduction alternative, which results in an emissions limit of 6,758 tpy SO_2, was reasonably cost effective. This limit will include SO_2 emissions resulting from the combustion of LVHC, HVLC, and SOG, whether they are combusted in Power Boiler 13 or some other combustion device. In order to provide flexibility for the facility, an emissions limit of 6,578 tons SO_2/12-consecutive months is required for Power Boiler 13 as a requirement for reasonable progress with a compliance date of 2016. A copy of the revised title V permit was included in Appendix M of the Georgia regional haze submittal.

8. Temple-Inland Rome Linerboard, Power Boiler 4

Temple-Inland Rome Linerboard's Power Boiler 4 is a 565 MMBtu/hr coal- and oil-fired boiler. The State identified this unit as significantly contributing to the total sulfate visibility impairment at two Class I areas (4.4 percent at Cohutta and 1.0 percent at Joyce Kilmer/Slickrock Wilderness Area in North Carolina/Tennessee).

The company's reasonable progress control analysis reviewed: (a) Two wet FGD configurations (magnesium enhanced lime) and limestone forced oxidation; (b) dry FGD (lime absorbent); (c) fuel switching; and (d) dry sorbent injection. All of these control options could be implemented by 2012. The remaining useful life of the power boiler extends past 2018 and past the control equipment amortization period.

The wet FGD options had an impact on water usage. GA EPD notes that the mill had sufficient capacity within their currently permitted water withdrawal permit to adequately handle the increased water use associated with wet FGD. All of the control options resulted in additional solid waste generation, and there were energy impacts associated with all of the control options. These energy costs were factored into the overall control cost effectiveness.

The State determined that none of the control options considered for Power Boiler 4 are reasonable at this time. A key factor in determining what was considered ''reasonable'' for reasonable progress requirements for this source is that the affected Class I areas impacted by this unit are predicted to meet the uniform rate of progress in 2018 with controls that are already required. This determination may be revisited at the periodic SIP progress review or when determining future RPGs for subsequent implementation periods.

9. EPA Assessment

As noted in EPA's Reasonable Progress Guidance, the states have wide latitude to determine appropriate additional control requirements for ensuring reasonable progress, and there are many ways for a state to approach identification of additional reasonable measures. States must consider the four statutory factors, at a minimum, in determining reasonable progress, but states have flexibility in how to take these factors into consideration.

GA EPD applied the methodology developed by VISTAS for identifying appropriate sources to be considered for additional controls under reasonable progress for the implementation period addressed by this SIP, which ends in 2018. Using this methodology, GA EPD first identified those emissions and emissions units most likely to have an impact on visibility in the State's and neighboring Class I areas. Units with emissions of SO_2 with a relative contribution to total sulfate visibility impairment of at least 0.5 percent contribution at any Class I area were then subject to a reasonable progress control analysis, except for utilities subject to Georgia's state rule 391–3–1–.02(13), ''Clean Air Interstate Rule SO_2 Annual Trading Program,'' that only

impacted visibility at Class I areas projected to be below the uniform rate of progress line.

Having reviewed GA EPD's methodology and analyses presented in the SIP materials prepared by GA EPD, EPA is proposing to approve Georgia's reasonable progress determinations. EPA preliminarily agrees with the State's approach of identifying the key pollutants contributing to visibility impairment at its Class I areas, and proposes to consider the State's methodology to identify sources of SO_2 most likely to have an impact on visibility on any Class I area to be an appropriate methodology for narrowing the scope of the State's analysis. In general, EPA also proposes to find Georgia's evaluation of the four statutory factors for reasonable progress to be reasonable and believes that the Georgia regional haze SIP ensures reasonable progress. EPA also proposes that, given the emissions reductions resulting from CAIR, Georgia's BART determinations, the measures in nearby states, and the visibility improvements projected for the affected Class I areas, these emissions reductions are in excess of that needed to be on the glidepath for the Cohutta Wilderness Area, and are close to the glidepaths for the Wolf Island and Okefenokee Wilderness Areas.

In addition, EPA proposes to find that Georgia fully evaluated all control technologies available at the time of its analysis and applicable to these facilities. EPA also proposes to find that Georgia consistently applied its criteria for reasonable compliance costs, and where it diverged, the State included justification for the other factors influencing the control determination.

B. Facilities With Emissions Unit(s) Not Subject to Reasonable Progress Analysis

1. EGUs Subject to CAIR

In concert with VISTAS, GA EPD applied its reasonable progress methodology and identified 20 Georgia Power Company emissions units at seven facilities that contributed greater than 0.5 percent of the total sulfate visibility impairment at a Class I area: (1) Plant Bowen SG 01, SG 02, SG 03, SG 04; (2) Plant Hammond SG 04; (3) Plant Mitchell SG 03; (4) Plant Scherer SG 01, SG 02, SG 03, SG 04; (5) Plant Yates SG 02, SG 03, SG 04, SG 05, SG 06, SG 07; (6) Plant Kraft SG 01, SG 02, SG 03; and (7) Plant McIntosh SG 01. Georgia, as part of its long-term reasonable progress analysis to consider potential sources contributing to visibility impairment, examined other CAA requirements such as CAIR and Georgia state rule 391–3–1–.02(13). Under Georgia's rule, SO_2 emissions from Georgia EGUs will be capped at 149,140 tons in 2015, a 70 percent reduction from 2002 actual emissions. In addition, a 70 percent reduction of SO_2 emissions is expected during this time period across all CAIR-affected EGUs in 28 eastern states due to CAIR. Since EGUs will be reducing their SO_2 emissions by approximately 70 percent through these programs and based on detailed analyses in EPA's May 2, 2005, CAIR, GA EPD concluded that additional EGU control during this time period is not reasonable for sources that significantly contribute to visibility impairment at Class I areas that are clearly projected to meet or exceed the uniform rate of progress in 2018. However, for sources that significantly contribute to visibility impairment at Class I areas not clearly meeting the uniform rate of progress (Okefenokee and Wolf Island), GA EPD considered additional controls at CAIR-affected units. The Cohutta Class I area is expected, based on modeling, to clearly meet/exceed the glidepath in 2018. GA EPD has therefore concluded that CAIR constitutes reasonable measures for Georgia EGUs that significantly impact visibility in Cohutta during this first assessment period (between baseline and 2018). Thus, GA EPD concluded that no additional controls beyond CAIR are reasonable for the remaining four identified Georgia Power facilities (Plants Bowen, Hammond, Scherer, and Yates) for SO_2 for the first implementation period ending in 2018. Because the Okefenokee, Wolf Island, and Saint Marks Class I areas are not expected to clearly meet or exceed the glidepath in 2018, controls required under CAIR have not been deemed to constitute reasonable measures for Georgia EGUs that significantly impact visibility in these Class I areas (Georgia Power's Plants Mitchell, Kraft and MacIntosh).

2. Non-EGUs Subject to BART

One of the emissions units considered for reasonable progress control, Interstate Paper's Power Boiler F1, is subject to BART and subsequently was evaluated for BART controls. GA EPD concluded that BART for the power boiler at Interstate Paper is a requirement to burn natural gas only, other than during curtailment periods (i.e., during reduction or discontinuance of supply in natural gas). GA EPD believes that, for this implementation period, the application of BART constitutes reasonable progress for this unit, and thus, is not requiring any additional controls for reasonable progress. As discussed in EPA's Reasonable Progress Guidance, since the BART analysis is based, in part, on an assessment of many of the same factors that must be addressed in establishing the RPG, EPA believes it is reasonable to conclude that any control requirements imposed in the BART determination also satisfy the RPG-related requirements for source review in the first implementation period.[18] Thus, EPA proposes to agree with the State's conclusions that the BART control evaluations satisfy reasonable progress for the first implementation period for Interstate Paper—Power Boiler F1.

3. Other Emissions Units Not Subject to Preparing a Reasonable Progress Control Analysis

GA EPD requested reasonable progress control analyses from all facilities identified as potentially contributing at least 0.5 percent of the total sulfate visibility impairment at a Class I area. In response to this request, additional information regarding projected 2018 actual emissions was received from a number of sources. As a result of this revised information, seven units at four facilities (Miller Brewing, Boilers B001, B002; Mount Vernon Mills, Boilers E U 03, E U 04; Savannah Sugar Refinery, Boiler U161; and Mohawk Industries, Boilers BL06, BL07) were removed from consideration for additional controls based on an analysis that the emissions units would not contribute 0.5 percent or greater of the total sulfate visibility impairment at any Class I area in 2018.

Due to resource limitations and/or uncertainty regarding future operations, the following three facilities with six emissions units requested emissions limits on their affected units in lieu of performing reasonable progress control analyses: (1) Rayonier Performance Fibers, Power Boilers 2 and 3, Recovery Furnaces 1 and 4; (2) Southern States Phosphate and Fertilizer, Sulfuric Acid Plant 2; and (3) Packaging Corporation of America, C E Boiler. The required emissions limits reduced the sulfate contributions of these units below 0.5 percent of the total sulfate visibility impact on any affected Class I areas.

6. BART

BART is an element of Georgia's LTS for the first implementation period. The BART evaluation process consists of three components: (a) An identification of all the BART-eligible sources, (b) an assessment of whether the BART-

[18] EPA's Reasonable Progress Guidance, pages 4.2–4.3.

eligible sources are subject to BART and (c) a determination of the BART controls. These components, as addressed by GA EPD, and the State's findings, are discussed as follows.

A. BART-Eligible Sources

The first phase of a BART evaluation is to identify all the BART-eligible sources within the state's boundaries. GA EPD identified the BART-eligible sources in Georgia by utilizing the three eligibility criteria in the BART Guidelines (70 FR 39158) and EPA's regulations (40 CFR 51.301): (1) One or more emissions units at the facility fit within one of the 26 categories listed in the BART Guidelines; (2) the emissions units were not in operation prior to August 7, 1962, and were in existence on August 7, 1977; and (3) these units have the potential to emit 250 tons or more per year of any visibility-impairing pollutant.

The BART Guidelines also direct states to address SO_2, NO_X, and direct PM (including both PM_{10} and $PM_{2.5}$) emissions as visibility-impairment pollutants and to exercise judgment in determining whether VOC or ammonia emissions from a source impair visibility in a Class I area. *See* 70 FR 39160. VISTAS modeling demonstrated that VOC from anthropogenic sources and ammonia from point sources, except for potentially one ammonia source, are not significant visibility-impairing pollutants in Georgia, as discussed in section IV.C.3 of this action. Based on the VISTAS modeling, GA EPD determined that ammonia emissions from the State's point sources are not anticipated to cause or contribute significantly to any impairment of visibility in Class I areas and should be exempt for BART purposes. The only ammonia source in Georgia that was identified by VISTAS as a possible contributor to visibility impairment, PCS Nitrogen, adequately addressed its contribution in its BART exemption modeling analysis.

B. BART-Subject Sources

The second phase of the BART evaluation is to identify those BART-eligible sources that may reasonably be anticipated to cause or contribute to visibility impairment at any Class I area, i.e., those sources that are subject to BART. The BART Guidelines allow states to consider exempting some BART-eligible sources from further BART review because they may not reasonably be anticipated to cause or contribute to any visibility impairment in a Class I area. Consistent with the BART Guidelines, Georgia required each of its BART-eligible sources to develop and submit dispersion modeling to assess the extent of their contribution to visibility impairment at Class I areas in surrounding states.

1. Modeling Methodology

The BART Guidelines allow states to use the CALPUFF [19] modeling system (CALPUFF) or another appropriate model to predict the visibility impacts from a single source on a Class I area, and therefore, to determine whether an individual source is anticipated to cause or contribute to impairment of visibility in Class I areas, i.e., ''is subject to BART.'' The Guidelines state that EPA believes that CALPUFF is the best regulatory modeling application currently available for predicting a single source's contribution to visibility impairment (70 FR 39162). Georgia, in coordination with VISTAS, used the CALPUFF modeling system to determine whether individual sources in the State are subject to BART.

The BART Guidelines also recommend that states develop a modeling protocol for making individual source attributions and suggest that states may want to consult with EPA and their RPO to address any issues prior to modeling. The VISTAS states, including Georgia, developed a ''Protocol for the Application of CALPUFF for BART Analyses.'' Stakeholders, including EPA, FLMs, industrial sources, trade groups, and other interested parties, actively participated in the development and review of the VISTAS protocol.

VISTAS developed a post-processing approach to use the new IMPROVE equation with the CALPUFF model results so that the BART analyses could consider the old and new IMPROVE equations. GA EPD sent a letter and supplemental email to EPA justifying the need for this post-processing approach, and the EPA Region 4 Regional Administrator sent the State a letter of approval dated September 11, 2008. Georgia's justification included a method to process the CALPUFF output and a rationale on the benefits of using the new IMPROVE equation. The State's description of the new post-processing methodology and the State and Region 4 letters are located in Appendices H.9a, H.9b, and H.9c, respectively, of the Georgia regional haze SIP submittal and can be accessed at *www.regulations.gov* using Docket ID No. EPA–R04–OAR–2010–0936.

2. Contribution Threshold

For states using modeling to determine the applicability of BART to single sources, the BART Guidelines note that the first step is to set a contribution threshold to assess whether the impact of a single source is sufficient to cause or contribute to visibility impairment at a Class I area. The BART Guidelines state that ''[a] single source that is responsible for a 1.0 deciview change or more should be considered to 'cause' visibility impairment.'' The BART Guidelines also state that ''the appropriate threshold for determining whether a source 'contributes to visibility impairment' may reasonably differ across states,'' but, ''[a]s a general matter, any threshold that you use for determining whether a source 'contributes' to visibility impairment should not be higher than 0.5 deciviews.'' The Guidelines affirm that states are free to use a lower threshold if they conclude that the location of a large number of BART-eligible sources in proximity of a Class I area justifies this approach.

Georgia used a contribution threshold of 0.5 deciview for determining which sources are subject to BART and concluded that the threshold of 0.5 deciview was appropriate in this situation. Georgia determined that, considering the results of the visibility impacts modeling conducted, a 0.5 deciview threshold was appropriate and a lower threshold was not warranted for the following reasons. There are a limited number of BART-eligible sources in close proximity to each of the State's Class I areas, and the overall impact of the BART-eligible sources on visibility in nearby Class I areas is relatively minimal. In addition, the results of the visibility impacts modeling demonstrated that the majority of the individual BART-eligible sources had visibility impacts well below 0.5 deciview. As stated in the BART Guidelines, where a state concludes that a large number of these BART-eligible sources within proximity of a Class I area justify a lower threshold, it may warrant establishing a lower contribution threshold. *See* 70 FR 39161–39162 (July 6, 2005). EPA proposes to concur with Georgia that the overall impacts of these sources are not sufficient to warrant a lower

[19] Note that EPA's reference to CALPUFF encompasses the entire CALPUFF modeling system, which includes the CALMET, CALPUFF, and CALPOST models and other pre and post processors. The different versions of CALPUFF have corresponding versions of CALMET, CALPOST, etc. which may not be compatible with previous versions (e.g., the output from a newer version of CALMET may not be compatible with an older version of CALPUFF). The different versions of the CALPUFF modeling system are available from the model developer on the following Web site: *http://www.src.com/verio/download/download.htm.*

contribution threshold and that a 0.5 deciview threshold was appropriate in this instance.

3. Identification of Sources Subject to BART

Georgia identified 24 facilities with BART-eligible sources. All of Georgia's 24 BART-eligible sources were required by the State to submit exemption-modeling demonstrations. Georgia found that two of its BART-eligible sources (Interstate Paper and Georgia Power—Plant Bowen) had modeled visibility impacts of more than the 0.5 deciview threshold for BART exemption. Therefore, these two facilities are subject to BART and submitted State permit applications including their proposed BART determinations.

Of the 22 exempted BART-eligible sources, two (Lafarge Building Materials and International Paper—Savannah) were exempted because they met EPA's model plant exemption criteria in the BART Guidelines (70 FR 39162–39163), and one, Georgia Pacific—Cedar Springs, was able to demonstrate exemption from BART by accepting SO_2 emissions limits on Power Boilers 1 and 2 (135 lb SO_2/hr each) and on Recovery Boiler 3 (350 ppm). These limits result in a 0.499 deciview impact at the Saint Marks Class I area and a 0.306 deciview impact at the Okefenokee Class I area. The remaining 19 sources demonstrated that they are not subject to BART by modeling less than a 0.5 deciview visibility impact at the affected Class I areas. For the non-EGU BART-eligible sources, this modeling involved emissions of NO_X, SO_2, and PM_{10} as applicable to individual facilities.

Ten of Georgia's BART-eligible sources are facilities with EGUs. These units are subject to CAIR. Because Georgia relied on CAIR to satisfy BART for SO_2 and NO_X for its EGUs in CAIR, in accordance with 40 CFR 51.308(e)(4), Georgia's EGUs were allowed to submit BART exemption modeling demonstrations for PM emissions only. All EGUs other than Georgia Power—Plant Bowen demonstrated that their PM_{10} emissions do not contribute to visibility impairment in any Class I area. Table 5 identifies the 24 BART-eligible sources located in Georgia.

TABLE 5—GEORGIA BART-ELIGIBLE AND SUBJECT-TO-BART SOURCES

Facilities With Unit(s) Subject to BART
Georgia Power—Plant Bowen
Interstate Paper, LLC

TABLE 5—GEORGIA BART-ELIGIBLE AND SUBJECT-TO-BART SOURCES—Continued

Facilities With Unit(s) Not Subject to BART
EGU CAIR and BART Modeling (PM only) Exempt Sources[20]
Georgia Power—Plant Branch
Georgia Power—Plant Hammond
Georgia Power—Plant McDonough
Georgia Power—Plant Mitchell
Georgia Power—Plant Scherer
Georgia Power—Plant Wansley
Georgia Power—Plant Yates
Georgia Power—Plant Kraft
Georgia Power—Plant McIntosh
Non-EGUs Exempt with Additional Model Based Emission Limits
Georgia Pacific—Cedar Springs
Non-EGUs Exempt using Model Plant Criteria
Lafarge Building Materials (Blue Circle Cement—Atlanta Plant)
International Paper—Savannah
Non-EGU BART Modeling Exempt
Chemical Products Corporation
DSM Chemicals, North America
International Paper—Augusta
Georgia Pacific—Brunswick Cellulose
Owens Corning
PCA—Valdosta (Tenneco Packaging, Inc.)
PCS Nitrogen
Prayon, Inc.
Rayonier (Rayonier ITT, Inc.)
Tronox (Kerr-McGee/Kemira)

Prior to the CAIR remand, the State's reliance on CAIR to satisfy BART for NO_X and SO_2 for affected CAIR EGUs was fully approvable and in accordance with 40 CFR 51.308(e)(4). However, the BART assessments for CAIR EGUs for NO_X and SO_2 and other provisions in this SIP revision are based on CAIR. In a separate action, EPA has proposed a limited disapproval of the Georgia regional haze SIP because of deficiencies in the State's regional haze SIP submittal arising from the remand by the D.C. Circuit to EPA of CAIR. *See* 76 FR 82219. Consequently, EPA is not taking action in this proposed rulemaking to address the State's reliance on CAIR to meet certain regional haze requirements.

C. BART Determinations

Two BART-eligible sources (Interstate Paper and Georgia Power—Plant Bowen) had modeled visibility impacts of more than 0.5 deciview and are therefore subject to BART. Consequently, they each submitted to the State permit applications that included their proposed BART determinations.

[20] EGUs were only evaluated for PM emissions. Georgia relied on CAIR to satisfy BART for SO_2 and NO_X for its EGUs in CAIR, in accordance with 40 CFR 51.308(e)(4). Thus, SO_2 and NO_X were not analyzed.

In accordance with the BART Guidelines, to determine the level of control that represents BART for each source, the State first reviewed existing controls on these units to assess whether these constituted the best controls currently available, then identified what other technically feasible controls are available, and finally, evaluated the technically feasible controls using the five BART statutory factors. The State's evaluations and conclusions, and EPA's assessment, are summarized below.

1. Georgia Power—Plant Bowen

Georgia Power—Plant Bowen has four BART-eligible emissions units that comprise the BART-eligible source. These units are coal fired EGUs, numbers 1, 2, 3, and 4. Each of the EGU's PM emissions are already controlled by electrostatic precipitators (ESPs) and wet FGD. The SO_2 scrubbers were installed on Plant Bowen between 2008 and 2010. Modeling results estimate that visibility impacts from Plant Bowen will exceed 0.5 deciview for at least one Class I area even with the PM emissions reductions that occur from scrubbing. Georgia Power identified the following four potential additional control technologies: (a) High voltage power conditioners (juice cans); (b) particle agglomerators; (c) the combination of juice cans and particle agglomerators; and (d) a wet ESP. The company evaluated the cost effectiveness, visibility impacts, and energy and non-air environmental impacts of these control options.

GA EPD determined that no additional control was reasonable for BART for this facility. Wet ESPs are the only control option that resulted in a modeled visibility improvement greater than 0.01 deciviews. Wet ESPs were predicted to improve visibility by approximately 0.14 to 0.16 deciviews for each unit at a cost effectiveness of \$37,107 to \$47,909/ton SO_2. In addition, the wet ESP would consume additional electricity and have non-air environmental impacts. The combination juice can/particle agglomerator option modeled a visibility benefit of 0.01 deciview for each unit at a cost effectiveness of \$12,222 to \$21,914/ton SO_2.

2. Interstate Paper—Power Boiler (F1), Recovery Boiler (F3), and Lime Kiln (F4)

Interstate Paper, located in Riceboro, Georgia, is a paper facility owned and operated by Interstate Resources Incorporated. Interstate Paper is located within 100 kilometers of the Wolf Island and Okefenokee Wilderness Class I areas. Three of Interstate Paper's units

are BART-eligible: Power Boiler (F1), Recovery Boiler (F3), and Lime Kiln (F4).

There are no known energy and non-air quality environmental impacts related to BART determined controls for Interstate paper, LLC. The remaining useful life of the source is at least 10 years.

(a). Power Boiler (F1)

Power Boiler (F1) at Interstate Paper was installed in 1968 and has a maximum heat input of 400 MMBtu/hr. It fires natural gas and No. 6 fuel oil. The power boiler, along with the lime kiln, is used as a backup control device for LVHC non-condensable gases (NCGs) generated in the pulp mill. Air pollutants emitted from the power boiler include all three BART relevant pollutants at the following rates: 300.49 tpy SO_2, 409.24 tpy NO_X, and 19 tpy PM.

GA EPD evaluated additional controls for NO_X, SO_2, and particulates. For NO_X, selective catalytic reduction (SCR), low NO_X burners, and low NO_X burner with flue gas recirculation were identified as economically feasible controls. However, they were not considered further for BART because of a visibility improvement of less than 0.01 Mm-1 from NO_X controls on this unit. An ESP and a fabric filter were identified as technically feasible controls for PM emissions reduction, but capital and operating costs caused them to be economically infeasible for BART. The resulting costs per ton of PM reduction ranged from $19,364 to $79,470/ton.

For SO_2, fuel switching to natural gas and a wet scrubber were found technically feasible. The cost per ton of SO_2 emissions reductions of each alternative is well within the range that GA EPD considers economically feasible. Hence, both control options were further considered for BART analysis. Conversion to natural gas has higher control efficiency at lower cost than a wet scrubber. A fuel switch to natural gas has a PM and SO_2 removal efficiency of more than 99 percent. The cost that the facility will incur for such a fuel switch is also relatively less than the addition of control equipment and, along with reduction in PM and SO_2 emissions, NO_X emission reductions will also be achieved. Therefore, GA EPD concluded that BART for the power boiler at Interstate Paper is a requirement to burn natural gas only, other than during curtailment periods (i.e., during reduction or discontinuance of supply in natural gas).

(b). Recovery Boiler (F3)

Recovery Boiler (F3) has a low odor, indirect contact evaporator design. The boiler fulfills the essential functions of evaporating the residual moisture from the black liquor solids, burning the organic constituents, producing steam, and producing sodium carbonate and sodium sulfides. Black liquor with more than 68 percent solids is fired into the recovery boiler where the organics from the black liquor are burned off in a reducing atmosphere, generating steam, molten sodium carbonate, and sodium sulfides. Air pollutants emitted from the recovery boiler include all three BART relevant pollutants at the following rates: 2.46 tpy SO_2, 349.92 tpy NO_X, and 0.5 tpy PM. Emissions of the recovery boiler currently pass through a venturi scrubber.

GA EPD evaluated additional controls for particulates, NO_X, and SO_2. No control technology was identified as being technically and economically feasible; therefore, GA EPD concluded that BART for this unit is no additional controls.

(c). Lime Kiln (F4)

The lime kiln dries and processes lime mud from the causticizing system by burning fuel oil with a sulfur content no greater than 2.5 percent. The lime kiln is permitted to burn natural gas, No. 6 fuel oil, or limited quantities of used oil. It is equipped with a venturi scrubber to control PM emissions. The lime kiln also serves as a back-up combustion device for LVHC NGCs generated in the pulp mill. Air pollutants emitted from the lime kiln include all three BART relevant pollutants at the following rates: 9.50 tpy SO_2, 149.16 tpy NO_X, and 127.56 tpy PM. Emissions of the lime kiln currently pass through a venturi scrubber.

GA EPD evaluated additional controls for particulates, NO_X, and SO_2. No control technologies were identified as being technically and economically feasible for particulates or SO_2. For NO_X, the low-NO_X burner control option and two selective non-catalytic reduction (SNCR) control options were considered to be economically feasible. However, they were not considered further as retrofit controls because of the visibility improvement of less than 0.01 Mm-1 from NO_X controls on this unit. GA EPD concluded that BART for particulates, NO_X, and SO_2 for this unit is no additional controls.

3. EPA Assessment

EPA proposes to approve Georgia's analyses and conclusions for BART for the Interstate Paper and Georgia Power—Plant Bowen facilities because the analyses were conducted in a manner that is consistent with EPA's BART Guidelines and EPA's *Air Pollution Control Cost Manual.* In addition, EPA believes that the conclusions reflect a reasonable application of EPA's guidance to these sources.

4. Enforceability of BART Limits

The required operational restrictions limiting the power boiler at the Interstate Paper facility to natural gas except during curtailment periods to meet BART were added as permit conditions to the facility's title V operating permit. Georgia EPD included a copy of the permit in the SIP (see Appendix M as revised in GA EPD's technical supplement dated November 19, 2010).

GA EPD also issued an operating permit with BART exemption limits for Georgia Pacific—Cedar Springs. Power Boilers 1 and No. 2 have limits of 135 lbs SO_2/hr each. Recovery Boiler No. 3 has an emissions limit of 350 ppm SO_2 on a dry basis corrected to eight percent oxygen as a 24-hour average when firing black liquor solids. These limits were added to the facility's title V operating permit. A copy of the revised title V permit was included in Appendix M of the Georgia regional haze submittal.

Recordkeeping, monitoring, and testing requirements were included to demonstrate compliance with the BART limits. These requirements are consistent with GA EPD's *Procedures for Testing and Monitoring Sources of Air Pollutants,* and must meet the requirements of Compliance Assurance Monitoring (40 CFR Part 64) or Periodic Monitoring (40 CFR 70.6(3)(i)(B)), as appropriate.

7. RPGs

The RHR at 40 CFR 51.308(d)(1) requires states to establish RPGs for each Class I area within the state (expressed in deciviews) that provide for reasonable progress towards achieving natural visibility. VISTAS modeled visibility improvements under existing Federal and state regulations for the period 2004–2018 and additional control measures which the VISTAS states planned to implement in the first implementation period. At the time of VISTAS modeling, some of the other states with sources potentially impacting visibility at the Georgia Class I areas had not yet made final control determinations for BART and/or reasonable progress, and thus, these controls were not included in the modeling submitted by Georgia. Any

controls resulting from those determinations will provide additional emissions reductions and resulting visibility improvement, which give further assurances that Georgia will achieve its RPGs. This modeling demonstrates that the 2018 base control scenario provides for an improvement in visibility better than the uniform rate of progress for the Cohutta Class I area for the most impaired days over the period of the implementation plan and, for all three of Georgia's areas, ensures no degradation in visibility for the least impaired days over the same period. For the Okefenokee and Wolf Island Wilderness Areas, the modeling predicts an improvement in visibility that is slightly slower than the uniform rate of progress by approximately 0.40 deciview for the most impaired days over the period of the implementation plan.

As shown in Table 6 below, Georgia's RPG for the 20 percent worst days (22.80 deciviews in 2018) at the Cohutta Wilderness Area provides greater visibility improvement from the baseline of 30.25 deciviews by 2018 than the uniform rate of progress (25.71 deciviews in 2018). For Okefenokee and Wolf Island, the RPGs for the 20 percent worst days (23.82 deciviews in 2018) provide slightly less visibility improvement from the baseline of 27.13 deciviews by 2018 than the uniform rate of progress (23.42 deciviews in 2018). Also, the RPGs for the 20 percent best days for all three Class I areas in the State provide greater visibility improvement by 2018 than current best day conditions. The regional haze provisions specify that a state may not adopt a RPG that represents less visibility improvement than is expected to result from other CAA requirements during the implementation period. 40 CFR 51.308(d)(1)(vi). Therefore, the CAIR states with Class I areas, like Georgia, took into account emissions reductions anticipated from CAIR in determining their 2018 RPGs.[21] The modeling supporting the analysis of these RPGs is consistent with EPA guidance at the time.

TABLE 6—GEORGIA 2018 RPGS

[In deciviews]

Class I area	Baseline visibility—20% worst days	2018 RPG—20% worst days (improvement from baseline)	Uniform rate of progress at 2018—20% worst days	Baseline visibility—20% best days	2018 RPG—20% best days (improvement from baseline)
Cohutta Wilderness Area	30.25	22.80 (7.45)	25.71	13.77	11.75 (2.02)
Okefenokee Wilderness Area	27.13	23.82 (3.31)	23.42	15.23	13.92 (1.31)
Wolf Island Wilderness Area	27.13	23.82 (3.31)	23.42	15.23	13.92 (1.31)

The RPGs for the Class I areas in Georgia are based on modeled projections of future conditions that were developed using the best available information at the time the analysis was done. These projections can be expected to change as additional information regarding future conditions becomes available. For example, new sources may be built, existing sources may shut down or modify production in response to changed economic circumstances, and facilities may change their emissions characteristics as they install control equipment to comply with new rules. It would be both impractical and resource-intensive to require a state to continually revise its RPGs every time an event affecting these future projections changed.

EPA recognized the problems of a rigid requirement to meet a long-term goal based on modeled projections of future visibility conditions and addressed the uncertainties associated with RPGs in several ways. EPA made clear in the RHR that the RPG is not a mandatory standard which must be achieved by a particular date. *See* 64 FR at 35733. At the same time, EPA established a requirement for a midcourse review and, if necessary, correction of the states' regional haze plans. *See* 40 CFR 52.308(g). In particular, the RHR calls for a five-year progress review after submittal of the initial regional haze plan. The purpose of this progress review is to assess the effectiveness of emissions management strategies in meeting the RPG and to provide an assessment of whether current implementation strategies are sufficient for the state or affected states to meet their RPGs. If a state concludes, based on its assessment, that the RPGs for a Class I area will not be met, the RHR requires the state to take appropriate action. *See* 40 CFR 52.308(h). The nature of the appropriate action will depend on the basis for the state's conclusion that the current strategies are insufficient to meet the RPGs. Georgia specifically committed to follow this process in the LTS portion of its submittal.

D. Coordination of RAVI and Regional Haze Requirements

EPA's visibility regulations direct states to coordinate their RAVI LTS and monitoring provisions with those for regional haze, as explained in sections III.F and III.G of this action. Under EPA's RAVI regulations, the RAVI portion of a state SIP must address any integral vistas identified by the FLMs pursuant to 40 CFR 51.304. An *integral vista* is defined in 40 CFR 51.301 as a ''view perceived from within the mandatory Class I Federal area of a specific landmark or panorama located outside the boundary of the mandatory Class I Federal area.'' Visibility in any mandatory Class I area includes any integral vista associated with that area. The FLMs did not identify any integral vistas in Georgia. In addition, the Class I areas in Georgia are neither experiencing RAVI nor are any of its sources affected by the RAVI provisions. Thus, the Georgia regional haze SIP submittal does not explicitly address the two requirements regarding coordination of the regional haze with the RAVI LTS and monitoring provisions. However, Georgia previously made a commitment to address RAVI should the FLMs certify visibility impairment from an

[21] Many of the CAIR states without Class I areas similarly relied on CAIR emission reductions within the state to address some or all of their contribution to visibility impairment in other states' Class I areas, which the impacted Class I area state(s) used to set the RPGs for their Class I area(s). Certain surrounding non-CAIR states also relied on emissions reductions due to CAIR in nearby states to develop their regional haze SIP submittals.

individual source.[22] EPA finds that this regional haze submittal appropriately supplements and augments Georgia's RAVI visibility provisions to address regional haze by updating the monitoring and LTS provisions as summarized below in this section.

In its January 25, 2010, submittal, GA EPD updated its visibility monitoring program and developed a LTS to address regional haze. Also in this submittal, GA EPD affirmed its commitment to complete items required in the future under EPA's RHR. Specifically, GA EPD made a commitment to review and revise its regional haze implementation plan and submit a plan revision to EPA by July 31, 2018, and every 10 years thereafter. *See* 40 CFR 51.308(f). In accordance with the requirements listed in 40 CFR 51.308(g) of EPA's regional haze regulations and 40 CFR 51.306(c) of the RAVI LTS regulations, GA EPD committed to submit a report to EPA on progress towards the RPGs for each mandatory Class I area located within Georgia and for each mandatory Class I area located outside Georgia that may be affected by emissions from within Georgia. The progress report is required to be in the form of a SIP revision and is due every five years following the initial submittal of the regional haze SIP. Consistent with EPA's monitoring regulations for RAVI and regional haze, Georgia will rely on the IMPROVE network for compliance purposes, in addition to any RAVI monitoring that may be needed in the future. *See* 40 CFR 51.305, 40 CFR 51.308(d)(4). Also, the Georgia new source review rules, previously approved in the State's SIP, continue to provide a framework for review and coordination with the FLMs on new sources which may have an adverse impact on visibility in either form (i.e., RAVI and/or regional haze) in any Class I area.

E. Monitoring Strategy and Other Implementation Plan Requirements

The primary monitoring network for regional haze in Georgia is the IMPROVE network. As discussed in section IV.B.2 of this action, there are currently two IMPROVE monitoring sites in Georgia, one for Cohutta and the other monitor for Okefenokee. The Okefenokee monitor is also used to represent visibility conditions at Wolf Island.

IMPROVE monitoring data from 2000–2004 serves as the baseline for the regional haze program, and is relied upon in the State's regional haze submittal. In the submittal, Georgia states its intention to rely on the IMPROVE network for complying with the regional haze monitoring requirement in EPA's RHR for the current and future regional haze implementation periods.

Data produced by the IMPROVE monitoring network will be used nearly continuously for preparing the five-year progress reports and the 10-year SIP revisions, each of which relies on analysis of the preceding five years of data. The Visibility Information Exchange Web System (VIEWS) Web site has been maintained by VISTAS and the other RPOs to provide ready access to the IMPROVE data and data analysis tools. Georgia is encouraging VISTAS and the other RPOs to maintain VIEWS or a similar data management system to facilitate analysis of the IMPROVE data.

In addition to the IMPROVE measurements, Georgia also operates a comprehensive $PM_{2.5}$ network of filter-based Federal reference method monitors, continuous mass monitors, filter-based speciated monitors, and the continuous speciated monitors listed below. GA EPD will use Southeastern Aerosol Research and Characterization (SEARCH) data from the monitoring sites listed below to further the understanding of both $PM_{2.5}$ and visibility formation and trends in Georgia. The SEARCH monitors provide the following data related to the nature of ambient $PM_{2.5}$:

- 24-hr $PM_{2.5}$ filter samples, analyzed for mass, ions (sulfate, nitrate, ammonium), organic carbon, elemental (black) carbon, and elements as measured by X-ray fluorescence (XRF);
- 24-hr PM coarse mass, ions, and XRF elements;
- 24-hr gaseous ammonia as collected with an annular denuder;
- Continuous (minute to hourly) $PM_{2.5}$ mass, organic carbon, elemental carbon, ammonium, nitrate, and sulfate; light scattering and light absorption;
- Continuous gaseous ozone, nitric oxide, nitrogen dioxide, total oxidized nitrogen, nitric acid, carbon monoxide, and SO_2; and
- Continuous 10-meter meteorological parameters: wind speed, wind direction, precipitation, temperature, barometric pressure, relative humidity and solar radiation.

In addition, the Clean Air Status and Trends Network (''CASTNet'') provides atmospheric data on the dry deposition component of total acid deposition, ground-level ozone, and other forms of atmospheric pollution.

F. Consultation With States and FLMs

1. Consultation With Other States

In December 2006 and May 2007, the State Air Directors from the VISTAS states held formal interstate consultation meetings. The purpose of these meetings was to discuss the methodology proposed by VISTAS for identifying sources to evaluate for reasonable progress. The states invited FLM and EPA representatives to participate and to provide additional feedback. The Directors discussed the results of analyses showing contributions to visibility impairment from states to each of the Class I areas in the VISTAS region.

GA EPD has evaluated the impact of Georgia sources on Class I areas in neighboring states. The state in which a Class I area is located is responsible for determining which sources, both inside and outside of that state, to evaluate for reasonable progress controls. Because at the time of Georgia's SIP development many of these states had not yet defined their criteria for identifying sources to evaluate for reasonable progress, Georgia applied its AOI methodology to identify sources in the State that have emissions units with impacts large enough to potentially warrant further evaluation and analysis. The State identified eight emissions units in Georgia with a contribution of 0.5 percent or more to the visibility impairment at the following seven Class I areas in five neighboring states: Sipsey Wilderness Area (AL), Saint Marks Wilderness Area (FL), Shining Rock Wilderness Area (NC), Swanquarter Wilderness Area (NC), Great Smoky Mountains National Park (NC/TN), Joyce Kilmer-Slickrock Wilderness Area (NC/TN), and Cape Romain Wilderness Area (SC). Based on an evaluation of the four reasonable progress statutory factors, Georgia determined that there are no additional control measures for these Georgia emissions units that would be reasonable to implement to mitigate visibility impacts in Class I areas in these neighboring states. GA EPD consulted with these states in the VISTAS region regarding its reasonable progress control evaluations showing no cost-effective controls available for those emissions units in Georgia contributing at least 0.5 percent to visibility impairment at Class I areas in those states. No adverse comments were received from the other VISTAS states. The documentation for these formal consultations is provided in Appendix J of Georgia's SIP.

Regarding the impact of sources outside of the State on Class I areas in Georgia, GA EPD sent letters to Florida,

[22] Georgia submitted its visibility SIP revisions addressing RAVI on August 31, 1987, which EPA approved on July 12, 1988, (53 FR 26253).

South Carolina, and Tennessee pertaining to emissions units within these states that it believes contribute 0.5 percent or more to visibility impairment in the Georgia Class I areas. At that time, these neighboring states were still in the process of evaluating BART and reasonable progress for their sources. Any controls resulting from those determinations will provide additional emissions reductions and resulting visibility improvement, which gives further assurances that Georgia will achieve its RPGs. Therefore, to be conservative, Georgia opted not to rely on any additional emissions reductions from sources located outside the State's boundaries beyond those already identified in the State's regional haze SIP submittal and as discussed in section IV.C.1 (Federal and state controls in place by 2018) of this action.

In 2007, Georgia received a letter sent by the Mid-Atlantic/Northeast Visibility Union (MANE–VU) RPO on behalf of the States of Maine, New Jersey, New Hampshire, and Vermont, inviting Georgia to participate in upcoming state consultation calls and meetings. This letter also requested a control strategy to provide a 28-percent reduction in SO_2 emissions from sources other than EGUs that would be equivalent to MANE–VU's proposed low sulfur fuel oil strategy. Georgia also received individual letters in 2007 from the MANE–VU States of Maine and Vermont stating that based on MANE–VU's analysis of 2002 emissions data, Georgia contributed to visibility impairment to Class I areas in those states. The letters invited Georgia to participate in future consultation discussions. Georgia sent letters to Maine and Vermont stating that GA EPD was currently in the process of requiring 95-percent SO_2 control on the seven largest coal-fired power plants in Georgia, and that these controls were not fully accounted for in the VISTAS modeling for 2009 and SO_2 AOI analyses for 2018. Georgia affirms it will continue to work through VISTAS to continue discussions with MANE–VU regarding this issue.

GA EPD evaluated both EGU and non-EGU sources to determine what controls are reasonable in this first implementation period. EPA proposes to find that Georgia has adequately addressed the consultation requirements in the RHR and appropriately documented its consultation with other states in its SIP submittal.

2. Consultation With the FLMs

Through the VISTAS RPO, Georgia and the nine other member states worked extensively with the FLMs from the U.S. Departments of the Interior and Agriculture to develop technical analyses that support the regional haze SIPs for the VISTAS states. The proposed regional haze plan for Georgia was out for public comment and FLM review from July to August 2009 and an earlier draft plan was shared for FLM and EPA discussions between December 2008 and February 2009. The FLMs did not submit any significant adverse comments regarding either the State's December 2008 draft or the July 2009 proposed regional haze SIP. The FLMs requested that the State include a discussion regarding the Georgia sources' visibility impacts to out-of-state Class I areas in the draft SIP as well as a discussion on consideration of measures to address construction activity. Additionally, the FLMs offered some clarifications to the text and requested inclusion of the BART exemption modeling reports for eight BART-eligible sources. Georgia addressed the FLMs' comments, including the requested BART modeling exemption reports and discussion regarding out-of-state Class I area impacts, and also provided written responses explaining its changes.

To address the requirement for continuing consultation procedures with the FLMs under 40 CFR 51.308(i)(4), Georgia stated in its SIP that GA EPD will offer the FLMs an opportunity for consultation on a yearly basis, including the opportunity to discuss the implementation process and the most recent IMPROVE monitoring data and VIEWS data. Records of annual consultations and progress report consultations will be maintained in Georgia EPD's regional haze files.

G. Periodic SIP Revisions and Five-Year Progress Reports

As also summarized in section IV.D of this action, consistent with 40 CFR 51.308(g), GA EPD affirmed its commitment to submitting a progress report in the form of a SIP revision to EPA every five years following this initial submittal of the Georgia regional haze SIP. The report will evaluate the progress made towards the RPGs for each mandatory Class I area located within Georgia and for each mandatory Class I area located outside Georgia that may be affected by emissions from within Georgia. Georgia also offered recommendations for several technical improvements that, as funding allows, can support the State's next LTS. These recommendations are discussed in detail in the Georgia submittal in Appendix K.

If another state's regional haze SIP identifies that Georgia's SIP needs to be supplemented or modified, and if after appropriate consultation Georgia agrees, today's action may be revisited or additional information and/or changes will be addressed in the five-year progress report SIP revision.

V. What action is EPA taking?

EPA is proposing a limited approval of a revision to the Georgia SIP submitted by the State of Georgia on February 11, 2010, and supplemented on November 19, 2010, as meeting some of the applicable regional haze requirements as set forth in sections 169A and 169B of the CAA and in 40 CFR 51.300–308, as described previously in this action.

VI. Statutory and Executive Order Reviews

A. Executive Order 12866, Regulatory Planning and Review

The Office of Management and Budget (OMB) has exempted this regulatory action from Executive Order 12866, entitled ''Regulatory Planning and Review.''

B. Paperwork Reduction Act

Under the Paperwork Reduction Act, 44 U.S.C. 3501 *et seq.,* OMB must approve all ''collections of information'' by EPA. The Act defines ''collection of information'' as a requirement for answers to * * * identical reporting or recordkeeping requirements imposed on ten or more persons * * *. 44 U.S.C. 3502(3)(A). The Paperwork Reduction Act does not apply to this action.

C. Regulatory Flexibility Act (RFA)

The RFA generally requires an agency to conduct a regulatory flexibility analysis of any rule subject to notice and comment rulemaking requirements unless the agency certifies that the rule will not have a significant economic impact on a substantial number of small entities. Small entities include small businesses, small not-for-profit enterprises, and small governmental jurisdictions.

This rule will not have a significant impact on a substantial number of small entities because SIP approvals under section 110 and subchapter I, part D of the CAA do not create any new requirements but simply approve requirements that the State is already imposing. Therefore, because the Federal SIP approval does not create any new requirements, I certify that this action will not have a significant economic impact on a substantial number of small entities.

Moreover, due to the nature of the Federal-state relationship under the CAA, preparation of flexibility analysis

would constitute Federal inquiry into the economic reasonableness of state action. The CAA forbids EPA to base its actions concerning SIPs on such grounds. *Union Electric Co.,* v. *EPA,* 427 U.S. 246, 255–66 (1976); 42 U.S.C. 7410(a)(2).

D. Unfunded Mandates Reform Act (UMRA)

Under sections 202 of the UMRA of 1995 (''Unfunded Mandates Act''), signed into law on March 22, 1995, EPA must prepare a budgetary impact statement to accompany any proposed or final rule that includes a Federal mandate that may result in estimated costs to State, local, or tribal governments in the aggregate; or to the private sector, of $100 million or more. Under section 205, EPA must select the most cost-effective and least burdensome alternative that achieves the objectives of the rule and is consistent with statutory requirements. Section 203 requires EPA to establish a plan for informing and advising any small governments that may be significantly or uniquely impacted by the rule.

EPA has determined that today's proposal does not include a Federal mandate that may result in estimated costs of $100 million or more to either state, local, or tribal governments in the aggregate, or to the private sector. This Federal action proposes to approve pre-existing requirements under State or local law, and imposes no new requirements. Accordingly, no additional costs to State, local, or tribal governments, or to the private sector, result from this action.

E. Executive Order 13132, Federalism

Federalism (64 FR 43255, August 10, 1999) revokes and replaces Executive Orders 12612 (Federalism) and 12875 (Enhancing the Intergovernmental Partnership). Executive Order 13132 requires EPA to develop an accountable process to ensure ''meaningful and timely input by State and local officials in the development of regulatory policies that have Federalism implications.'' ''Policies that have federalism implications'' is defined in the Executive Order to include regulations that have ''substantial direct effects on the states, on the relationship between the national government and the states, or on the distribution of power and responsibilities among the various levels of government.'' Under Executive Order 13132, EPA may not issue a regulation that has Federalism implications, that imposes substantial direct compliance costs, and that is not required by statute, unless the Federal government provides the funds necessary to pay the direct compliance costs incurred by state and local governments, or EPA consults with state and local officials early in the process of developing the proposed regulation. EPA also may not issue a regulation that has Federalism implications and that preempts state law unless the Agency consults with state and local officials early in the process of developing the proposed regulation.

This rule will not have substantial direct effects on the states, on the relationship between the national government and the states, or on the distribution of power and responsibilities among the various levels of government, as specified in Executive Order 13132, because it merely approves a state rule implementing a Federal standard, and does not alter the relationship or the distribution of power and responsibilities established in the CAA. Thus, the requirements of section 6 of the Executive Order do not apply to this rule.

F. Executive Order 13175, Coordination With Indian Tribal Governments

Executive Order 13175, entitled ''Consultation and Coordination with Indian Tribal Governments'' (65 FR 67249, November 9, 2000), requires EPA to develop an accountable process to ensure ''meaningful and timely input by tribal officials in the development of regulatory policies that have tribal implications.'' This proposed rule does not have tribal implications, as specified in Executive Order 13175. It will not have substantial direct effects on tribal governments. Thus, Executive Order 13175 does not apply to this rule. EPA specifically solicits additional comment on this proposed rule from tribal officials.

G. Executive Order 13045, Protection of Children From Environmental Health Risks and Safety Risks

Protection of Children from Environmental Health Risks and Safety Risks (62 FR 19885, April 23, 1997), applies to any rule that: (1) is determined to be ''economically significant'' as defined under Executive Order 12866, and (2) concerns an environmental health or safety risk that EPA has reason to believe may have a disproportionate effect on children. If the regulatory action meets both criteria, the Agency must evaluate the environmental health or safety effects of the planned rule on children, and explain why the planned regulation is preferable to other potentially effective and reasonably feasible alternatives considered by the Agency.

This rule is not subject to Executive Order 13045 because it does not involve decisions intended to mitigate environmental health or safety risks.

H. Executive Order 13211, Actions That Significantly Affect Energy Supply, Distribution, or Use

This rule is not subject to Executive Order 13211, ''Actions Concerning Regulations That Significantly Affect Energy Supply, Distribution, or Use'' (66 FR 28355, May 22, 2001) because it is not a significant regulatory action under Executive Order 12866.

I. National Technology Transfer and Advancement Act

Section 12 of the National Technology Transfer and Advancement Act (NTTAA) of 1995 requires Federal agencies to evaluate existing technical standards when developing a new regulation. To comply with NTTAA, EPA must consider and use ''voluntary consensus standards'' (VCS) if available and applicable when developing programs and policies unless doing so would be inconsistent with applicable law or otherwise impractical.

EPA believes that VCS are inapplicable to this action. Today's action does not require the public to perform activities conducive to the use of VCS.

List of Subjects in 40 CFR Part 52

Environmental protection, Air pollution control, Intergovernmental relations, Nitrogen oxides, Particulate matter, Reporting and recordkeeping requirements, Sulfur dioxide, Volatile organic compounds.

Authority: 42 U.S.C. 7401 *et seq.*

Dated: February 15, 2012.

A. Stanley Meiburg,

Acting Regional Administrator, Region 4.

[FR Doc. 2012–4516 Filed 2–24–12; 8:45 am]

BILLING CODE 6560–50–P

ENVIRONMENTAL PROTECTION AGENCY

40 CFR Part 63

[EPA–R09–OAR–2012–0117; FRL–9635–8]

Delegation of National Emission Standards for Hazardous Air Pollutants for Source Categories; Nevada

AGENCY: Environmental Protection Agency (EPA).

ACTION: Proposed rule.

SUMMARY: Pursuant to section 112(l) of the 1990 Clean Air Act, EPA granted

delegation of specific national emission standards for hazardous air pollutants (NESHAP) to the Nevada Division of Environmental Protection on October 6, 2011. EPA is proposing to revise the Code of Federal Regulations to reflect the current delegation status of NESHAP in Nevada.

DATES: Any comments on this proposal must arrive by March 28, 2012.

ADDRESSES: Submit comments, identified by docket number EPA–R09–OAR–2012–0117, by one of the following methods:

1. *Federal eRulemaking Portal: www.regulations.gov.* Follow the on-line instructions.

2. *Email: steckel.andrew@epa.gov.*

3. *Mail or deliver:* Andrew Steckel (AIR–4), U.S. Environmental Protection Agency Region IX, 75 Hawthorne Street, San Francisco, CA 94105–3901.

Instructions: All comments will be included in the public docket without change and may be made available online at *www.regulations.gov*, including any personal information provided, unless the comment includes Confidential Business Information (CBI) or other information whose disclosure is restricted by statute. Information that you consider CBI or otherwise protected should be clearly identified as such and should not be submitted through *www.regulations.gov* or email. *www.regulations.gov* is an ''anonymous access'' system, and EPA will not know your identity or contact information unless you provide it in the body of your comment. If you send email directly to EPA, your email address will be automatically captured and included as part of the public comment. If EPA cannot read your comment due to technical difficulties and cannot contact you for clarification, EPA may not be able to consider your comment. Electronic files should avoid the use of special characters, any form of encryption, and be free of any defects or viruses.

Docket: The index to the docket for this action is available electronically at *www.regulations.gov* and in hard copy at EPA Region IX, 75 Hawthorne Street, San Francisco, California. While all documents in the docket are listed in the index, some information may be publicly available only at the hard copy location (e.g., copyrighted material), and some may not be publicly available in either location (e.g., CBI). To inspect the hard copy materials, please schedule an appointment during normal business hours with the contact listed in the **FOR FURTHER INFORMATION CONTACT** section.

FOR FURTHER INFORMATION CONTACT: Rynda Kay, EPA Region IX, (415) 947–4118, *kay.rynda@epa.gov.*

SUPPLEMENTARY INFORMATION: This document concerns the delegation of unchanged NESHAP to the Nevada Division of Environmental Protection. In the Rules and Regulations section of this **Federal Register**, EPA is amending regulations to reflect the current delegation status of NESHAP in Nevada. EPA is taking direct final action without prior proposal because the Agency believes this action is not controversial. If we receive adverse comments, however, we will publish a timely withdrawal of the direct final rule and address the comments in a subsequent action based on this proposed rule. Please note that if we receive adverse comment on an amendment, paragraph, or section of this rule and if that provision may be severed from the remainder of the rule, we may adopt as final those provisions of the rule that are not the subject of an adverse comment.

We do not plan to open a second comment period, so anyone interested in commenting should do so at this time. If we do not receive adverse comments, no further activity is planned. For further information, please see the direct final action.

Dated: February 13, 2012.

Deborah Jordan,

Director, Air Division, Region IX.

[FR Doc. 2012–4568 Filed 2–24–12; 8:45 am]

BILLING CODE 6560–50–P

DEPARTMENT OF COMMERCE

National Oceanic and Atmospheric Administration

50 CFR Part 622

RIN 0648–BA52

Fisheries of the Caribbean, Gulf of Mexico, and South Atlantic; Snapper-Grouper Fishery off the Southern Atlantic States; Amendment 24

AGENCY: National Marine Fisheries Service (NMFS), National Oceanic and Atmospheric Administration (NOAA), Commerce.

ACTION: Notice of availability; request for comments.

SUMMARY: The South Atlantic Fishery Management Council (Council) has submitted Amendment 24 to the Fishery Management Plan for the Snapper-Grouper Fishery of the South Atlantic Region (FMP) for review, approval, and implementation by NMFS. Amendment 24 proposes actions to revise definitions of management thresholds for South Atlantic red grouper; establish a rebuilding plan; establish red grouper sector annual catch limits (ACLs) based on allocation decisions, a recreational annual catch target (ACT), and sector accountability measures (AMs); and remove the combined gag, black grouper, and red grouper ACLs and AMs. The intent of Amendment 24 is to implement a rebuilding plan for red grouper to help achieve optimum yield (OY) for the red grouper resource in accordance with the Magnuson-Stevens Fishery Conservation and Management Act (Magnuson-Stevens Act).

DATES: Written comments must be received on or before April 27, 2012.

ADDRESSES: You may submit comments on the amendment identified by NOAA–NMFS–2011–0298 by any of the following methods:

- *Electronic submissions:* Submit electronic comments via the Federal e-Rulemaking Portal: *http://www.regulations.gov.* Follow the instructions for submitting comments.
- *Mail:* Rick DeVictor, Southeast Regional Office, NMFS, 263 13th Avenue South, St. Petersburg, FL 33701.

Instructions: All comments received are a part of the public record and will generally be posted to *http://www.regulations.gov* without change. All Personal Identifying Information (for example, name, address, etc.) voluntarily submitted by the commenter may be publicly accessible. Do not submit Confidential Business Information or otherwise sensitive or protected information.

To submit comments through the Federal e-rulemaking portal: *http://www.regulations.gov,* click on ''submit a comment,'' then enter ''NOAA–NMFS–2011–0298'' in the keyword search and click on ''search.'' To view posted comments during the comment period, enter ''NOAA–NMFS–2011–0298'' in the keyword search and click on ''search.'' NMFS will accept anonymous comments (enter N/A in the required field if you wish to remain anonymous). You may submit attachments to electronic comments in Microsoft Word, Excel, WordPerfect, or Adobe PDF file formats only.

Comments received through means not specified in this rule will not be considered.

Electronic copies of the amendment may be obtained from the Southeast Regional Office Web site at *http://sero.nmfs.noaa.gov.*

FOR FURTHER INFORMATION CONTACT: Rick DeVictor, telephone: 727–824–5305, or email: *rick.devictor@noaa.gov.*

SUPPLEMENTARY INFORMATION: The snapper-grouper fishery of the South Atlantic is managed under the FMP. The FMP was prepared by the Council and is implemented through regulations at 50 CFR part 622 under the authority of Magnuson-Stevens Act. The Magnuson-Stevens Act also requires that NMFS, upon receiving a plan or amendment, publish an announcement in the **Federal Register** notifying the public that the plan or amendment is available for review and comment.

Background

The red grouper stock in the South Atlantic was assessed through the Southeast, Data, Assessment, and Review (SEDAR) process in 2010. The assessment indicates that the stock is experiencing overfishing and is overfished. Overfishing occurs when either fishing mortality rate exceeds the maximum fishing mortality threshold or catch exceeds the overfishing limit. Overfishing may lead to an overfished condition. A stock is overfished when its biomass has declined below a level that jeopardizes the capacity of the stock to produce the maximum sustainable yield (MSY) on a continuing basis. The level is referred to as the minimum stock size threshold (MSST).

As directed by the Magnuson-Stevens Act, the Council must implement a rebuilding plan, through an FMP Amendment or proposed regulations, which ends overfishing immediately and provides for rebuilding the fishery. The intent of a rebuilding plan is to increase biomass of overfished stocks to a sustainable level within a specified period of time. A plan should achieve conservation goals, while minimizing to the extent practicable adverse socioeconomic impacts. NMFS notified the Council of the stock status on June 9, 2010; the Magnuson-Stevens Act specifies that measures to end overfishing and rebuild the stock must be implemented within 2 years of notification.

The Magnuson-Stevens Act requires that ACLs and AMs be implemented to prevent overfishing and achieve the OY from a fishery. An ACL is the level of annual catch of a stock in pounds or numbers of fish that, if exceeded, triggers AMs. AMs are management controls to prevent ACLs from being exceeded and to correct overages of ACLs if they do occur. Two examples of AMs include an in-season closure if catch approaches the ACL and reducing the ACL by an overage that occurred the previous fishing year.

The Council and NMFS are implementing a division of the red grouper ACL into sector-ACLs based upon allocation decisions. The Council and NMFS have determined that sector-ACLs and sector-AMs are important components of red grouper management as each sector differs in scientific and management uncertainty.

Actions Contained in the Amendment

The amendment proposes to revise definitions of management thresholds for South Atlantic red grouper; establish a rebuilding plan; establish red grouper sector-ACLs based on allocation decisions, a recreational ACT, and sector AMs; and remove the combined gag, black grouper, and red grouper ACLs and AMs.

Modify the Current Definitions for Management Thresholds

Definitions of MSY, OY, and MSST were set for red grouper in Amendment 11 to the FMP. The Council is revising the definitions based on the most recent scientific information. MSY would equal the yield produced by F_{MSY} or the F_{MSY} proxy; MSY and F_{MSY} would be recommended by the most recent SEDAR or the Council's Scientific and Statistical Committee (SSC). Amendment 24 would specify the MSY value for red grouper equal to 1.11 million lb (503,488 kg) until modified by further scientific information. The OY would be set equal to the acceptable biological catch (ABC) and ACL. The MSST, which is the overfished definition, would be changed from (1–M) x B_{MSY}, where M equals natural mortality and B equals biomass, to 75 percent of SSB_{MSY}, where SSB_{MSY} equals spawning stock biomass at MSY. The change would relieve an administrative burden by expanding the buffer between MSST and SSB_{MSY} and avoid unwarranted designation of an overfished status.

Red Grouper Rebuilding Plan

The Council selected a 10-year rebuilding plan for red grouper in Amendment 24. This is the maximum time frame allowed under the Magnuson-Stevens Act. However, because the Council intends to manage the stock using the F_{OY} yield stream, the stock is projected to have an 81 percent chance of rebuilding, which is greater than the 70 percent recommended by the Council's SSC. Given management uncertainties and uncertainties regarding stock assessment projections more than a few years in the future, a 10-year rebuilding plan would allow for fluctuations in catches and provide flexibility to address the needs of fishing communities when setting catch levels and management measures.

Red Grouper Sector-ACLs, Recreational ACT, and AMs

The current combined gag, black grouper, and red grouper ACLs were implemented through Amendment 17B to the FMP (75 FR 82280, December 30, 2010), before black grouper and red grouper stock assessments were completed through SEDAR. The Council, through Amendment 24, proposes to remove the combined gag, black grouper, and red grouper commercial and recreational ACLs as the ACLs are not based upon the best scientific information. Amendment 24 would implement red grouper ACLs. The gag ACL, implemented through Amendment 16 to the FMP, will remain. The Comprehensive ACL Amendment will specify the ACL for black grouper.

The Council decided to define the red grouper ACL equal to ABC. The SSC's recommendation for ABC is the projected yield stream with a 70 percent probability of rebuilding success. The Council chose to define the rebuilding yield stream at the equivalent of OY (75 percent of F_{MSY}). The resultant ACLs proposed in Amendment 24, in round weight, are 647,000 lb (293,474 kg) for 2012, 718,000 lb (325,679 kg) for 2013, and 780,000 lb (353,802 kg) for 2014 and subsequent fishing years. In terms of AMs, if the ACLs, as estimated by the Southeast Fisheries Science Center (SEFSC) are exceeded in a fishing year, then during the following fishing year, the Assistant Administrator for Fisheries (AA) will file a notification with the Office of the Federal Register to state that both the commercial and recreational sectors will not have an increase in their respective sector ACLs during that following fishing year. The ABCs, ACLs, and ACTs selected by the Council may be revised through future stock assessments.

The allocation of red grouper between the commercial and recreational sectors is 44 percent and 56 percent, respectively. Amendment 24 would implement ACLs for the red grouper commercial and recreational sectors based on this allocation.

The recreational ACTs would be equal to the recreational ACL*(1–PSE) or ACL*0.5, whichever is greater, where PSE equals the proportional standard error from the Marine Recreational Information Plan data source. The ACT is an amount of annual catch of a stock or stock complex that is the management target of the fishery, and accounts for management uncertainty in controlling the actual catch at or below the ACL. ACTs are recommended in the system of accountability measures so that ACL is not exceeded.

The commercial ACLs, in round weight, would be 284,680 lb (129,129 kg) for 2012, 315,920 lb (143,299 kg) for 2013, and 343,200 lb (155,673 kg) for 2014 and subsequent fishing years. The recreational ACLs, in round weight, would be 362,320 lb (164,346 kg) for 2012, 402,080 lb (182,380 kg) for 2013, and 436,800 lb (198,129 kg) for 2014 and subsequent fishing years. The recreational ACTs, in round weight, would be 271,740 lb (123,259 kg) for 2012, 301,560 lb (136,785 kg) for 2013, and 327,600 lb (148,597 kg) for 2014 and subsequent fishing years.

AMs

The Council intends to remove the combined gag, black grouper, and red grouper commercial and recreational AMs established through Amendment 17B. Gag and black grouper AMs, implemented through Amendment 16 to the FMP and the Comprehensive ACL Amendment, respectively, will remain. Amendment 24 would add in-season commercial and recreational AMs for red grouper. If commercial or recreational landings for red grouper reach or are projected to reach the applicable ACL as estimated by the SEFSC, the AA will file a notification with the Office of the Federal Register to close the commercial or recreational sector for the remainder of the fishing year.

Amendment 24 would specify overage adjustments for red grouper. If commercial or recreational landings for red grouper, as estimated by SEFSC, exceed the applicable ACL, the AA would file a notification with the Office of the Federal Register, to reduce the applicable ACL the following fishing year by the amount of the overage in the prior fishing year. Overage adjustments are needed particularly for red grouper to follow guidance for stocks and stock complexes in rebuilding plans that ensure rebuilding occurs within the specified timeframe.

A proposed rule that would implement measures outlined in Amendment 24 has been drafted. In accordance with the Magnuson-Stevens Act, NMFS is evaluating Amendment 24 to determine whether it is consistent with the FMP, the Magnuson-Stevens Act, and other applicable law. If the determination is affirmative, NMFS will publish the proposed rule in the **Federal Register** for public review and comment.

Consideration of Public Comments

The Councils submitted Amendment 24 for Secretarial review, approval, and implementation. NMFS' decision to approve, partially approve, or disapprove Amendment 24 will be based, in part, on consideration of comments, recommendations, and information received during the comment period on this notice of availability.

Public comments received by 5 p.m. eastern time, on April 27, 2012, will be considered by NMFS in the approval/disapproval decision regarding Amendment 24.

Authority: 16 U.S.C. 1801 *et seq.*

Dated: February 22, 2012.

Steven Thur,

Acting Director, Office of Sustainable Fisheries, National Marine Fisheries Service.

[FR Doc. 2012–4508 Filed 2–24–12; 8:45 am]

BILLING CODE 3510–22–P

Notices

Federal Register

Vol. 77, No. 38

Monday, February 27, 2012

This section of the FEDERAL REGISTER contains documents other than rules or proposed rules that are applicable to the public. Notices of hearings and investigations, committee meetings, agency decisions and rulings, delegations of authority, filing of petitions and applications and agency statements of organization and functions are examples of documents appearing in this section.

DEPARTMENT OF AGRICULTURE

Submission for OMB Review; Comment Request

February 21, 2012.

The Department of Agriculture has submitted the following information collection requirement(s) to OMB for review and clearance under the Paperwork Reduction Act of 1995, Public Law 104–13. Comments regarding (a) whether the collection of information is necessary for the proper performance of the functions of the agency, including whether the information will have practical utility; (b) the accuracy of the agency's estimate of burden including the validity of the methodology and assumptions used; (c) ways to enhance the quality, utility and clarity of the information to be collected; (d) ways to minimize the burden of the collection of information on those who are to respond, including through the use of appropriate automated, electronic, mechanical, or other technological collection techniques or other forms of information technology should be addressed to: Desk Officer for Agriculture, Office of Information and Regulatory Affairs, Office of Management and Budget (OMB), *OIRA_Submission@OMB.EOP.GOV* or fax (202) 395–5806 and to Departmental Clearance Office, USDA, OCIO, Mail Stop 7602, Washington, DC 20250–7602. Comments regarding these information collections are best assured of having their full effect if received within 30 days of this notification. Copies of the submission(s) may be obtained by calling (202) 720–8958.

An agency may not conduct or sponsor a collection of information unless the collection of information displays a currently valid OMB control number and the agency informs potential persons who are to respond to the collection of information that such persons are not required to respond to the collection of information unless it displays a currently valid OMB control number.

Animal and Plant Health Inspection Service

Title: Endangered Species Regulations and Forfeiture Procedures.

OMB Control Number: 0579–0076.

Summary of Collection: The Endangered Species Act of 1973 (16 U.S.C. 1513 et seq.) directs Federal departments to utilize their authorities under the Act to conserve endangered and threatened species. Section 3 of the Act specifies that the Secretary of Agriculture is authorized to promulgate such regulations as may be appropriate to enforce the Act. The regulations contained in 7 CFR 355 are intended to carry out the provisions of the Act. The Plant Protection and Quarantine (PPQ) division of USDA's Animal & Plant Health Inspection Service (APHIS) is responsible for implementing these regulations. Specifically, Section 9(d) of the Act authorizes 7 CFR 355.11, which requires a general permit to engage in the business of importing or exporting terrestrial plants listed in 50 CFR Parts 17 and 23. APHIS will collect information using several PPQ forms.

Need and Use of the Information: APHIS will collect information on the applicant's name and address, whether the applicant is affiliated with a business, and the address of all the applicant's business locations in order for the applicant to obtain a general permit. Upon approval of the permit, any endangered species shipped via mail must be sent to an authorized port of entry and must be accompanied by appropriate supporting documentation.

Description of Respondents: Business or other for-profit.

Number of Respondents: 16,579.

Frequency of Responses: Recordkeeping; Reporting: On occasion.

Total Burden Hours: 7,552.

Animal and Plant Health Inspection Service

Title: Importation of Clementines from Spain.

OMB Control Number: 0579–0203.

Summary of Collection: As authorized by the Plant Protection Act (7 U.S.C. 7701–7772) (PPA), the Secretary of Agriculture may prohibit or restrict the importation, entry, exportation, or movement in interstate commerce of any plant, plant product, biological control organism, noxious weed, means of conveyance, or other article if the Secretary determines that the prohibition or restriction is necessary to prevent a plant pest or noxious weed from being introduced into or disseminated within the United States. This authority has been delegated to the Animal and Plant Health Inspection Service (APHIS), which administers regulation to implement the PPA. The regulations in ''Subpart—Fruits and Vegetables,'' 7 CFR 319.56 through 319.56–8, prohibits or restrict the importation of fruits and vegetables into the United States from certain parts of the world to prevent the introduction and dissemination of plant pest, including fruit flies.

Under the regulations, clementines from Spain are subject to certain conditions before entering the United States to ensure that exotic plant pest, such as the Mediterranean fruit fly, are not introduced into the United States.

Need and Use of the Information: APHIS will collect information including a trust fund agreement, grower registration and agreement, a Mediterranean fruit fly management program, fruit fly trapping and control activities, recordkeeping, a phytosanitary certificate and box labeling to ensure that the cold treatment was successfully completed and also to ensure that no Mediterranean fruit flies are found in any of the shipment of clementines from Spain.

Failure to collect this information would cripple APHIS' ability to ensure that clementines from Spain are not carrying fruit flies.

Description of Respondents: Business or other for-profit; Federal Government.

Number of Respondents: 4,508.

Frequency of Responses: Recordkeeping; Reporting: On occasion.

Total Burden Hours: 6,340.

Ruth Brown,

Departmental Information Collection Clearance Officer.

[FR Doc. 2012–4379 Filed 2–24–12; 8:45 am]

BILLING CODE 3410–34–P

DEPARTMENT OF AGRICULTURE

Submission for OMB Review; Comment Request

February 21, 2012.

The Department of Agriculture has submitted the following information collection requirement(s) to OMB for review and clearance under the Paperwork Reduction Act of 1995, Public Law 104–13. Comments regarding (a) Whether the collection of information is necessary for the proper performance of the functions of the agency, including whether the information will have practical utility; (b) the accuracy of the agency's estimate of burden including the validity of the methodology and assumptions used; (c) ways to enhance the quality, utility and clarity of the information to be collected; (d) ways to minimize the burden of the collection of information on those who are to respond, including through the use of appropriate automated, electronic, mechanical, or other technological collection techniques or other forms of information technology should be addressed to: Desk Officer for Agriculture, Office of Information and Regulatory Affairs, Office of Management and Budget (OMB), *OIRA_Submission@OMB.EOP.GOV* or fax (202) 395–5806 and to Departmental Clearance Office, USDA, OCIO, Mail Stop 7602, Washington, DC 20250–7602. Comments regarding these information collections are best assured of having their full effect if received within 30 days of this notification. Copies of the submission(s) may be obtained by calling (202) 720–8958.

An agency may not conduct or sponsor a collection of information unless the collection of information displays a currently valid OMB control number and the agency informs potential persons who are to respond to the collection of information that such persons are not required to respond to the collection of information unless it displays a currently valid OMB control number.

Food and Nutrition Service

Title: The Integrity Program (TIP) Data Collection.

OMB Control Number: 0584–0401.

Summary of Collection: The Women, Infant, and Children (WIC) Program regulations at 7 CFR 246.12(j) (5), requires State agencies to report annually on their vendor monitoring efforts. The data collected is used at the States level as a management tool and at the national level to provide Congress, the Office of the Inspector General, senior program managers, as well as the general public, assurances that program funds are being spent appropriately and that every reasonable effort is being made to prevent, detect and eliminate fraud, waste and abuse.

Need and Use of the Information: The Food and Nutrition Service (FNS) will collect information using form FNS 698, Profile of Integrity Practices and Procedures; FNS 699, the Integrity Profile Report Form; and FNS 700, TIP Data Entry Form. The collected information from the forms will be analyzed and a report is prepared by FNS annually that (1) Assesses State agency progress in eliminating abusive vendors, (2) assesses the level of activity that is being directed to ensure program integrity, and (3) analyzes trends over a 5-year period. The information is used at the national level in formulating program policy and regulations. At the FNS regional office level, the data is reviewed to identify possible vendor management deficiencies so that technical assistance can be provided to States, as needed. At the State level, the information is used to provide assurances to the Governor's office, and other interested parties, that WIC fraud issues are being addressed. Without the information it would take long to identify and correct State agency program deficiencies and to implement corrective actions.

Description of Respondents: State, Local or Tribal Government.

Number of Respondents: 90.

Frequency of Responses: Reporting: Annually.

Total Burden Hours: 38.

Ruth Brown,

Departmental Information Collection Clearance Officer.

[FR Doc. 2012–4381 Filed 2–24–12; 8:45 am]

BILLING CODE 3410–30–P

DEPARTMENT OF AGRICULTURE

Animal and Plant Health Inspection Service

[Docket No. APHIS–2011–0127]

Notice of Request for Approval of an Information Collection; Importation of Fresh (Frozen or Chilled) Pork or Pork Products Into the United States

AGENCY: Animal and Plant Health Inspection Service, USDA.

ACTION: Approval of an information collection; comment request.

SUMMARY: In accordance with the Paperwork Reduction Act of 1995, this notice announces the Animal and Plant Health Inspection Service's intention to request approval of an information collection associated with regulations for the importation of fresh (frozen or chilled) pork or pork products into the United States.

DATES: We will consider all comments that we receive on or before April 27, 2012.

ADDRESSES: You may submit comments by either of the following methods:

- *Federal eRulemaking Portal:* Go to *http://www.regulations.gov/#!documentDetail;D=APHIS-2011-0127-0001*.
- *Postal Mail/Commercial Delivery:* Send your comment to Docket No. APHIS–2011–0127, Regulatory Analysis and Development, PPD, APHIS, Station 3A–03.8, 4700 River Road Unit 118, Riverdale, MD 20737–1238.

Supporting documents and any comments we receive on this docket may be viewed at *http://www.regulations.gov/#!docketDetail;D=APHIS–2011–0127* or in our reading room, which is located in Room 1141 of the USDA South Building, 14th Street and Independence Avenue SW., Washington, DC. Normal reading room hours are 8 a.m. to 4:30 p.m., Monday through Friday, except holidays. To be sure someone is there to help you, please call (202) 690–2817 before coming.

FOR FURTHER INFORMATION CONTACT: For information on the importation of hams into the United States, contact Dr. Dawn Hunter, Staff Veterinarian, Technical Trade Services—Products, NCIE, VS, APHIS, 4700 River Road Unit 40, Riverdale, MD 20737; (301) 734–6245. For copies of more detailed information on the information collection, contact Mrs. Celeste Sickles, APHIS' Information Collection Coordinator, at (301) 851–2908.

SUPPLEMENTARY INFORMATION:

Title: Title: Importation of Fresh (Frozen or Chilled) Pork or Pork Products Into the United States.

OMB Number: 0579–xxxx.

Type of Request: Approval of an information collection.

Abstract: Under the authority of the Animal Health Protection Act (7 U.S.C. 8301 *et seq.*), the Animal and Plant Health Inspection Service (APHIS) regulates the importation of certain animal and poultry products and byproducts to prevent the introduction of pests and diseases of livestock and poultry into the United States. These regulations are found at 9 CFR parts 94, 95, 96, and 122.

The regulations require a number of information collection activities to prevent the introduction of livestock and poultry diseases and pests via the

importation of animal and poultry products and byproducts, including fresh (frozen or chilled) pork and pork products, into the United States. For fresh pork and pork products, these include certification of the pork or pork products by foreign national governments; application of seals; if a seal is broken, information on where and why; requests for approval of defrost facilities and for hearings regarding denial or termination of approval; applications for importing small amounts of pork or pork products for analysis, testing, or examination; cooperative service (trust fund) agreements; notifications to Federal inspectors of the arrival in the United States of pork or pork products from foreign regions; and recordkeeping.

These activities are currently approved by the Office of Management and Budget (OMB) under OMB control number 0579–0015, which also covers information collection activities for a variety of other animal and poultry products imported into the United States. We are proposing to separate the commodities previously approved under OMB control number 0579–0015 into individual collections to better reflect the commodities' specific collection activities and account for the information APHIS collects. Once approved by OMB, only information collection activities associated with the importation of nonfood animal and poultry products and byproducts will be under OMB control number 0579–0015. Information collection activities for fresh pork or pork products and other commodities now covered under OMB control number 0579–0015 will receive new numbers when approved.

We are asking the Office of Management and Budget (OMB) to approve our use of the information collection activities related to importation of fresh (frozen or chilled) pork or pork products for 3 years.

The purpose of this notice is to solicit comments from the public (as well as affected agencies) concerning our information collection. These comments will help us:

(1) Evaluate whether the collection of information is necessary for the proper performance of the functions of the Agency, including whether the information will have practical utility;

(2) Evaluate the accuracy of our estimate of the burden of the collection of information, including the validity of the methodology and assumptions used;

(3) Enhance the quality, utility, and clarity of the information to be collected; and

(4) Minimize the burden of the collection of information on those who are to respond, through use, as appropriate, of automated, electronic, mechanical, and other collection technologies; e.g., permitting electronic submission of responses.

Estimate of burden: The public reporting burden for this collection of information is estimated to average 84.96126418 hours per response.

Respondents: Foreign national governments; shippers' crews; inspectors; defrost facility operators; processing facility operators; laboratories, museums, and States; and meat processing facility operators.

Estimated annual number of respondents: 93.

Estimated annual number of responses per respondent: 66.344086.

Estimated annual number of responses: 6,170.

Estimated total annual burden on respondents: 524,211 hours. (Due to averaging, the total annual burden hours may not equal the product of the annual number of responses multiplied by the reporting burden per response.)

All responses to this notice will be summarized and included in the request for OMB approval. All comments will also become a matter of public record.

Done in Washington, DC, this 21st day of February 2012.

Kevin Shea,

Acting Administrator, Animal and Plant Health Inspection Service.

[FR Doc. 2012–4560 Filed 2–24–12; 8:45 am]

BILLING CODE 3410–34–P

DEPARTMENT OF AGRICULTURE

Animal and Plant Health Inspection Service

[Docket No. APHIS–2011–0125]

Notice of Revision and Request for Extension of Approval of an Information Collection; Importation of Nonfood Animal and Poultry Products and Byproducts Into the United States

AGENCY: Animal and Plant Health Inspection Service, USDA.

ACTION: Extension of approval of an information collection; comment request.

SUMMARY: In accordance with the Paperwork Reduction Act of 1995, this notice announces the Animal and Plant Health Inspection Service's intention to revise an information collection associated with regulations for restricted and controlled importation of nonfood animal and poultry products and byproducts into the United States and to request extension of approval of the information collection.

DATES: We will consider all comments that we receive on or before April 27, 2012.

ADDRESSES: You may submit comments by either of the following methods:

- *Federal eRulemaking Portal:* Go to *http://www.regulations.gov/#!documentDetail;D=APHIS-2011-0125-0001.*
- *Postal Mail/Commercial Delivery:* Send your comment to Docket No. APHIS–2011–0125, Regulatory Analysis and Development, PPD, APHIS, Station 3A–03.8, 4700 River Road Unit 118, Riverdale, MD 20737–1238.

Supporting documents and any comments we receive on this docket may be viewed at *http://www.regulations.gov/#!docketDetail;D=APHIS–2011–0125* or in our reading room, which is located in Room 1141 of the USDA South Building, 14th Street and Independence Avenue SW., Washington, DC. Normal reading room hours are 8 a.m. to 4:30 p.m., Monday through Friday, except holidays. To be sure someone is there to help you, please call (202) 690–2817 before coming.

FOR FURTHER INFORMATION CONTACT: For information on restricted and controlled importation of nonfood animal and poultry products and byproducts into the United States, contact Dr. Tracye Butler, Assistant Director, Technical Trade Services Team—Products, NCIE, VS, APHIS, 4700 River Road Unit 40, Riverdale, MD 20737; (301) 734–7376. For copies of more detailed information on the information collection, contact Mrs. Celeste Sickles, APHIS' Information Collection Coordinator, at (301) 851–2908.

SUPPLEMENTARY INFORMATION:

Title: Restricted and Controlled Importation of Nonfood Animal and Poultry Products and Byproducts Into the United States.

OMB Number: 0579–0015.

Type of Request: Revision and extension of approval of an information collection.

Abstract: Under the authority of the Animal Health Protection Act (7 U.S.C. 8301 *et seq.*), the Animal and Plant Health Inspection Service (APHIS) regulates the importation of certain animal and poultry products and byproducts to prevent the introduction of pests and diseases of livestock and poultry into the United States. These regulations are found at 9 CFR parts 94, 95, 96, and 122.

The regulations require a number of information collection activities to prevent the introduction of livestock and poultry diseases and pests via the importation of animal and poultry

products and byproducts into the United States. These include applications, agreements, certificates, certifications by foreign national governments, compliance agreements, permissions to import, placards on vehicles, statements on manifests, bills of lading, or waybills, and reports.

These activities are currently approved by the Office of Management and Budget (OMB) under OMB control number 0579–0015 and apply to a variety of animal and poultry products and byproducts imported into the United States, including, but not limited to, nonfood animal and poultry products and byproducts. We are proposing to separate the commodities approved under OMB control number 0579–0015 into individual collections to better reflect the commodities' specific collection activities and account for the information APHIS collects. Once approved by OMB, only information collection activities associated with the importation of nonfood animal and poultry products and byproducts will be under OMB control number 0579–0015, and the title of this information collection will name these commodities. We are publishing separate **Federal Register** notices for the other collections, which will receive new OMB control numbers when approved.

We are asking the Office of Management and Budget (OMB) to approve our use of the information collection activities for nonfood animal and poultry products and byproducts for an additional 3 years.

The purpose of this notice is to solicit comments from the public (as well as affected agencies) concerning our information collection under OMB control number 0579–0015. These comments will help us:

(1) Evaluate whether the collection of information is necessary for the proper performance of the functions of the Agency, including whether the information will have practical utility;

(2) Evaluate the accuracy of our estimate of the burden of the collection of information, including the validity of the methodology and assumptions used;

(3) Enhance the quality, utility, and clarity of the information to be collected; and

(4) Minimize the burden of the collection of information on those who are to respond, through use, as appropriate, of automated, electronic, mechanical, and other collection technologies; e.g., permitting electronic submission of responses.

Estimate of burden: The public reporting burden for this collection of information is estimated to average 0.73241 hours per response.

Respondents: Foreign national governments, foreign port personnel, foreign exporters, nonprofit and profit U.S. importers, museums, educational institutions, transportation operators, and carrier personnel.

Estimated annual number of respondents: 3,334.

Estimated annual number of responses per respondent: 1.342831434.

Estimated annual number of responses: 4,477.

Estimated total annual burden on respondents: 3,279 hours. (Due to averaging, the total annual burden hours may not equal the product of the annual number of responses multiplied by the reporting burden per response.)

All responses to this notice will be summarized and included in the request for OMB approval. All comments will also become a matter of public record.

Done in Washington, DC this 21st day of February 2012.

Kevin Shea,

Acting Administrator, Animal and Plant Health Inspection Service.

[FR Doc. 2012–4562 Filed 2–24–12; 8:45 am]

BILLING CODE 3410–34–P

DEPARTMENT OF AGRICULTURE

Federal Crop Insurance Corporation

[Docket No. FCIC–12–0003]

Request for Extension of a Currently Approved Information Collection

AGENCY: Risk Management Agency, USDA.

ACTION: Extension of approval of an information collection; comment request.

Note: With this renewal submission of 0563–0067—Risk Management and Crop Insurance Education; Requests for Applications, we are merging the burden of 0563–0066—Community Outreach and Assistance Partnership Program and changing the title to—Risk Management Education and Outreach Partnerships Program.

SUMMARY: In accordance with the Paperwork Reduction Act of 1995 (44 U.S.C Chapter 35) this notice announces the Risk Management Agency's intention to request an extension for and revision to a currently approved information collection for Risk Management and Crop Insurance Education; Request for Applications.

DATES: Comments on this notice will be accepted until close of business April 27, 2012.

ADDRESSES: FCIC prefers that comments be submitted electronically through the Federal eRulemaking Portal. You may submit comments, identified by Docket ID No. FCIC–12–0003, by any of the following methods:

- *Federal eRulemaking Portal: http://www.regulations.gov.* Follow the instructions for submitting comments.
- *By Mail to:* Lana Cusick, Risk Management Education Division, USDA/RMA, 1400 Independence Avenue SW., Stop 0808, Washington, DC 20250–0808, telephone (202) 720–3325.

All comments received, including those received by mail, will be posted without change to *http://www.regulations.gov*, including any personal information provided, and can be accessed by the public. All comments must include the agency name and docket number or Regulatory Information Number (RIN) for this rule. For detailed instructions on submitting comments and additional information, see *http://www.regulations.gov.* If you are submitting comments electronically through the Federal eRulemaking Portal and want to attach a document, we ask that it be in a text-based format. If you want to attach a document that is a scanned Adobe PDF file, it must be scanned as text and not as an image, thus allowing FCIC to search and copy certain portions of your submission. For questions regarding attaching a document that is a scanned Adobe PDF file, please contact the RMA Web Content Team at (816) 823–4694 or by email at *rmaweb.content@rma.usda.gov.*

Privacy Act: Anyone is able to search the electronic form of all comments received for any dockets by the name of the individual submitting the comment (or signing the comment, if submitted on behalf of an association, business, labor union, etc.). You may review the complete User Notice and Privacy Notice for Regulations.gov at *http://www.regulations.gov/#!privacyNotice.*

SUPPLEMENTARY INFORMATION:

Title: Risk Management Education and Outreach Partnerships Program.

OMB Number: 0563–0067.

Type of Request: Extension, merge, and revision of a currently approved information collection.

Abstract: The Federal Crop Insurance Act directs the Federal Crop Insurance Corporation, operating through RMA, to (a) establish crop insurance education and information programs in States that have been historically underserved by the Federal crop insurance program [7 U.S.C. 1524(a)(2)]; and (b) provide agricultural producers with training opportunities in risk management, with a priority given to producers of specialty crops and underserved commodities [7

U.S.C. 1522(d)(3)(F)]. With this submission, RMA seeks to obtain OMB's approval for an information collection project that will assist RMA in operating and evaluating these programs. The information collection project is a Request for Applications. The primary objective of the information collection projects is to enable RMA to better evaluate the performance capacity and plans of organizations that are applying for funds for cooperative and partnership agreements for risk management education programs and crop insurance education programs.

Estimate of burden: The public reporting burden for this collection of information is estimated to average: 16.75 per response for the Risk Management Education and Community Outreach Partnerships Program for agri-business professionals.

Respondents/Affected Entities: Agribusiness professionals.

Estimated annual number of respondents: 220 respondents.

Estimated annual number of responses: 220 responses or 1 per respondent.

Estimated total annual burden per respondents: 3,685 hours.

Comments are invited on: (1) Whether the proposed collection of information is necessary for the proper performance of the functions of the agency, including whether the information will have practical utility; (2) the accuracy of the agency's estimate of the burden of the proposed collection information; (3) ways to enhance the quality, utility, and clarity of the information to be collected; and (4) ways to minimize the burden of the collection of information on those who are to respond, through use, as appropriate, of automated, electronic, mechanical, or other collection technologies, e.g. permitting electronic submission of responses. Comments may be sent to Lana Cusick, Risk Management Education Division, USDA/RMA, 1400 Independence Avenue SW., Stop 0808, Washington, DC 20250–0808. All comments will be available for public inspection during regular business hours at the same address.

All responses to this notice will be summarized and included in the request for OMB approval. All comments will also become a matter of public record.

Signed in Washington, DC, on February 17, 2012.

William J. Murphy,

Manager, Federal Crop Insurance Corporation.

[FR Doc. 2012–4465 Filed 2–24–12; 8:45 am]

BILLING CODE 3410–08–P

DEPARTMENT OF AGRICULTURE

Food and Nutrition Service

Agency Information Collection Activities: Proposed Collection; Comment Request—Negative QC Review Schedule, Status of Sample Selection of Completion

AGENCY: Food and Nutrition Service, USDA.

ACTION: Notice.

SUMMARY: In accordance with the Paperwork Reduction Act of 1995, this notice invites the general public and other public agencies to comment on the proposed information collection for the FNS–245, Negative Case Action Review Schedule and updates the status of the FNS–248, Status of Sample Selection and Completion. The FNS–245 is currently used in the Quality Control process for the Supplemental Nutrition Assistance Program and the FNS–248 will be removed from this collection as it has been eliminated as a FNS form through regulatory change. The proposed collection is a revision of a collection currently approved under OMB No. 0584–0034.

DATES: Written comments must be submitted on or before April 27, 2012.

ADDRESSES: Comments are invited on: (a) Whether the proposed collection of information is necessary for the proper performance of the functions of the agency, including whether the information has practical utility; (b) the accuracy of the agency's estimate of the burden of the proposed collection of information, including the validity of the methodology and assumptions used; (c) ways to enhance the quality, utility, and clarity of the information to be collected; (d) ways to minimize the burden of the collection of information on those who are to respond, including the use of appropriate automated, electronic, mechanical, or other technological collection techniques or other forms of information technology.

Comments may be sent to: Francis B. Heil, Chief, Quality Control Branch, Program Accountability and Administration Division, Food and Nutrition Service, U.S. Department of Agriculture, 3101 Park Center Drive, Room 822, Alexandria, VA 22302. You may also download an electronic version of this notice at *http://www.fns.usda.gov/fsp/rules/regulations/default.htm* and comment via email at *SNAPHQ–Web@fns.usda.gov* or use the Federal e-Rulemaking Portal. Go to *http://www.regulations.gov* and follow the online instructions for submitting comments electronically.

All written comments will be open for public inspection at the office of the Food and Nutrition Service during regular business hours (8:30 a.m. to 5 p.m. Monday through Friday) at 3101 Park Center Drive, Room 822, Alexandria, Virginia 22302.

All responses to this notice will be included in the request for Office of Management and Budget approval. All comments will also become a matter of public record.

FOR FURTHER INFORMATION CONTACT: Requests for additional information or copies of the information collection form and instruction should be directed to Francis B. Heil, (703) 305–2442.

SUPPLEMENTARY INFORMATION:

Title: Negative Quality Control Review Schedule.

OMB Number: 0584–0034.

Form Number: FNS–245.

Expiration Date: December 31, 2012.

Type of Request: Revision of currently approved collections.

The FNS–245, Negative Case Action Review Schedule:

Abstract: The FNS–245, Negative Case Action Review Schedule, is designed to collect quality control (QC) data and serve as the data entry form for negative case action QC reviews in the Supplemental Nutrition Assistance Program (SNAP). State agencies complete the FNS–245 for each negative case in their QC sample. The reporting and recordkeeping burden associated with the completion of the FNS–245 has increased from approximately 118,569 hours to 177,351 hours. Regulatory changes have decreased the report time per response of this form by 0.083 hours; however the 58,782 hour increase in the total burden is largely a result of the increase in total SNAP case selection from 38,911 cases in FY2007 to 59,831 cases in FY 2010.

Affected Public: State, Local & Tribal Governments.

Number of Respondents: 53 State Agencies.

Number of Responses per Respondent: 1,128.87 Records.

Total Annual Responses: 59,831.

Reporting time per Response: 2.9406 Hours.

Estimated Annual Reporting Burden: 174,939.

Number of Record Keepers: 53.

Number of Records per Record Keeper: 1128.87 Records.

Estimated Number of Records/Response to Keep: 59,831 Records.

Recordkeeping Time per Response: .0236 Hours.

Total Estimated Recordkeeping: 1,412 Hours.

Annual Recordkeeping and Reporting Burden: 177,347 Hours.

REPORTING BURDEN

Affected public	Instrument	Estimated number of respondents	Response annually per respondent	Total annual responses	Hours per response	Annual burden hours
State agencies	FNS–245, Negative Case Action Review Schedule.	53.00	1,128.87	59,830.11	2.9406	175,936.42
Reporting Totals		53.00		59,830.11		175,936.42
Recordkeeping Burden						
State agencies	Maintain Records	53.00	1,128.87	59,830.11	0.024	1,411.99
Total Recordkeeping and Reporting Burden.		53.00		119,713.22		177,348.41

The FNS–248, Status of Sample Selection and Completion:

The FNS–248, Status of Sample Selection and Completion, tracked a state's progress in sample selection and case completion on a monthly basis. A Final rule entitled ''Food Stamp Program: Discretionary Quality Control Provisions of Title IV of Public Law 107–171,'' was published in the **Federal Register** on June 11, 2010 (75 FR 33422) and eliminated the use of this form. Therefore, the annual reporting and recordkeeping burden associated with the form is no longer necessary and will be eliminated from this collection.

Dated: February 16, 2012.

Audrey Rowe,

Administrator, Food and Nutrition Service.

[FR Doc. 2012–4459 Filed 2–24–12; 8:45 am]

BILLING CODE 3410–30–P

DEPARTMENT OF AGRICULTURE

Forest Service

Lake Tahoe Basin Federal Advisory Committee (LTFAC)

AGENCY: Forest Service, USDA.

ACTION: Notice of meeting.

SUMMARY: The Lake Tahoe Federal Advisory Committee will hold a meeting on March 21, 2012 at the Sierra Nevada College, 999 Tahoe Boulevard, Incline Village, Nevada 89451–9500. This Committee, established by the Secretary of Agriculture on December 15, 1998 (64 FR 2876), is chartered to provide advice to the Secretary on implementing the terms of the Federal Interagency Partnership on the Lake Tahoe Region and other matters raised by the Secretary.

DATES: The meeting will be held March 21, 2012, beginning at 1:30 p.m. and ending at 4:30 p.m.

ADDRESSES: Sierra Nevada College, 999 Tahoe Boulevard, Incline Village, Nevada 89451–9500.

FOR FURTHER INFORMATION OR TO REQUEST AN ACCOMMODATION CONTACT: Arla Hains, Lake Tahoe Basin Management Unit, Forest Service, 35 College Drive, South Lake Tahoe, CA 96150, (530) 543–2773.

SUPPLEMENTARY INFORMATION: Items to be covered on the agenda: (1) Adaptive Management, (2) review and discussion on the Environmental Improvement Program funding and fiscal responsibility, and (3) public comment.

All Lake Tahoe Basin Federal Advisory Committee meetings are open to the public. Interested citizens are encouraged to attend at the above address. Issues may be brought to the attention of the Committee during the open public comment period at the meeting or by filing written statements with the secretary for the Committee before or after the meeting. Please refer any written comments to the Lake Tahoe Basin Management Unit at the contact address stated above.

Dated: February 21, 2012.

Nancy J. Gibson,

Forest Supervisor.

[FR Doc. 2012–4567 Filed 2–24–12; 8:45 am]

BILLING CODE 3410–11–P

DEPARTMENT OF COMMERCE

International Trade Administration

[A–489–805]

Certain Pasta From Turkey: Extension of Time Limit for the Preliminary Results of Antidumping Duty Administrative Review

AGENCY: Import Administration, International Trade Administration, Department of Commerce.

FOR FURTHER INFORMATION CONTACT: Stephanie Moore, AD/CVD Operations, Office 3, Import Administration, International Trade Administration, U.S. Department of Commerce, 14th Street and Constitution Ave. NW., Washington, DC 20230; telephone: (202) 482–3692.

Background

On August 26, 2011, the Department of Commerce (''Department'') published a notice of initiation of the administrative review of the antidumping duty order on certain pasta from Turkey, covering the period July 1, 2010, through June 30, 2011. *See Initiation of Antidumping and Countervailing Duty Administrative Reviews and Requests for Revocation in Part,* 76 FR 53404 (August 26, 2011). The preliminary results of review are currently due April 1, 2012.

Extension of Time Limit of Preliminary Results

Section 751(a)(3)(A) of the Tariff Act of 1930, as amended (the Act), requires that the Department make a preliminary determination within 245 days after the last day of the anniversary month of an order for which a review is requested. Section 751(a)(3)(A) of the Act further states that, if it is not practicable to complete the review within the time period specified, the administering authority may extend the 245-day period to issue its preliminary results to up to 365 days.

We determine that completion of the preliminary results of this review within the 245-day period is not practicable as the Department needs additional time to analyze complex issues regarding affiliation and knowledge of U.S. destination. Given the complexity of these issues, and in accordance with section 751(a)(3)(A) of the Act, we are extending the time period for issuing the preliminary results of this review by

120 days. Therefore, the preliminary results are now due no later than July 30, 2012. The final results continue to be due 120 days after publication of the preliminary results.

This notice is published pursuant to sections 751(a)(3)(A) and 777(i)(1) of the Act.

Dated: February 17, 2012.

Christian Marsh,

Deputy Assistant Secretary for Antidumping and Countervailing Duty Operations.

[FR Doc. 2012–4483 Filed 2–24–12; 8:45 am]

BILLING CODE 3510–DS–P

DEPARTMENT OF COMMERCE

International Trade Administration

[A–570–831]

Fresh Garlic From the People's Republic of China: Partial Final Results and Partial Final Rescission of the 2009–2010 Administrative Review

AGENCY: Import Administration, International Trade Administration, Department of Commerce.

SUMMARY: On October 20, 2011, the Department of Commerce (Department) published the partial preliminary results of the administrative review of the antidumping duty order on fresh garlic from the People's Republic of China (PRC) covering the period of review (POR) of November 1, 2009, through October 31, 2010. The Department is issuing these partial final results for the PRC-wide entity only.

Based on the analysis of the record and the comments received, the Department finds that seven companies subject to this review, including mandatory respondents, Shandong Longtai Fruits and Vegetables Co., Ltd. (Longtai) and Weifang Hongqiao International Logistic Co., Ltd. (Hongqiao), did not demonstrate their eligibility for separate rate status and, thus, will be considered part of the PRC-wide entity for purposes of these final results. These companies are listed in Appendix I. The Department is also rescinding the review with respect to 14 exporters who had ''no shipments'' during the POR. A list of these companies is found in Appendix II.

DATES: *Effective Date:* February 27, 2012.

FOR FURTHER INFORMATION CONTACT: Lingjun Wang, AD/CVD Operations, Office 6, Import Administration, International Trade Administration, U.S. Department of Commerce, 14th Street and Constitution Avenue NW., Washington, DC 20230; telephone: (202) 482–2316.

SUPPLEMENTARY INFORMATION:

Background

On October 20, 2011, the Department published in the **Federal Register** the partial preliminary results of the 2009–2010 administrative review of the antidumping duty order on fresh garlic from the PRC. *See Fresh Garlic From the People's Republic of China: Partial Preliminary Results, Rescission of, and Intent To Rescind, in Part, the 2009–2010 Administrative Review,* 76 FR 65172 (October 20, 2011) (*First Partial Preliminary Results*).[1] On December 7, 2011, the Department issued its second partial preliminary results.[2] Since the *First Partial Preliminary Results,* the following events have occurred.

On November 21, 2011, the Department extended the deadline for submission of case briefs to December 1, 2011 and rebuttal briefs to December 6, 2011. On November 30, 2011, the Fresh Garlic Producers Association (FGPA) and its individual members[3] (collectively, Petitioners) submitted a document called ''Petitioners' Comments on Certain No Shipment Claims and Department's Partial Preliminary Results'' (No Shipment Comments). On December 9, 2011, the Department rejected Petitioners' No Shipment Comments as untimely new factual information. *See* the Department's December 9, 2011 letter to Petitioners. On December 1, 2011, Petitioners, and Hongqiao, Sunny Import & Export Co. Ltd., and Shenzhen Greening Trading Co., Ltd. (collectively, Respondents) submitted case briefs. On December 6, 2011, Petitioners submitted their rebuttal brief.

Scope of the Order

The products covered by the order are all grades of garlic, whole or separated into constituent cloves, whether or not peeled, fresh, chilled, frozen, provisionally preserved, or packed in water or other neutral substance, but not prepared or preserved by the addition of other ingredients or heat processing. The differences between grades are based on color, size, sheathing, and level of decay. The scope of the order does not include the following: (a) Garlic that has been mechanically harvested and that is primarily, but not exclusively, destined for non-fresh use; or (b) garlic that has been specially prepared and cultivated prior to planting and then harvested and otherwise prepared for use as seed. The subject merchandise is used principally as a food product and for seasoning. The subject garlic is currently classifiable under subheadings 0703.20.0010, 0703.20.0020, 0703.20.0090, 0710.80.7060, 0710.80.9750, 0711.90.6000, and 2005.90.9700 of the Harmonized Tariff Schedule of the United States (HTSUS).

Although the HTSUS subheadings are provided for convenience and customs purposes, our written description of the scope of the order is dispositive. In order to be excluded from the order, garlic entered under the HTSUS subheadings listed above that is (1) mechanically harvested and primarily, but not exclusively, destined for non-fresh use or (2) specially prepared and cultivated prior to planting and then harvested and otherwise prepared for use as seed must be accompanied by declarations to U.S. Customs and Border Protection (CBP) to that effect.

Analysis of Comments Received

All issues addressed in the case and rebuttal briefs by parties in this review are discussed in the Memorandum from Christian Marsh, Deputy Assistant Secretary for Antidumping and Countervailing Duty Operations, to Ronald K. Lorentzen, Acting Assistant Secretary for Import Administration, regarding ''Issues and Decision Memorandum for Fresh Garlic from the People's Republic of China: Partial Final Results and Partial Final Rescission of the 2009–2010 Administrative Review,'' dated concurrently with this notice (Decision Memorandum), which is hereby adopted by this notice. A list of the issues that parties raised and to which we responded in the Decision Memorandum follows as Appendix III to this notice. The Decision Memorandum is a public document, which is on file electronically via Import Administration's Antidumping and Countervailing Duty Centralized Electronic Services System (IA ACCESS). Access to IA ACCESS is available in the Central Records Unit (CRU) of the main Commerce Building, Room 7046. In addition, a complete version of the Decision Memorandum is also accessible on the Web at *http://ia.ita.doc.gov/frn.* The signed Decision Memorandum and the electronic

[1] The Department initiated this review for 113 producers/exporters. Based on timely withdrawal of requests for review, the Department rescinded the review with respect to 84 producers/exporters in the *First Partial Preliminary Results.* These final results and final rescission cover 21 companies.

[2] The second partial preliminary results covered the remaining companies subject to the review. *See Fresh Garlic From the People's Republic of China: Preliminary Results of the 2009–2010 Antidumping Duty Administrative Review,* 76 FR 76375 (December 7, 2011). The final results for these companies are currently due no later than April 5, 2012.

[3] The individual members of the FGPA are Christopher Ranch L.L.C., The Garlic Company, Valley Garlic, and Vessey and Company, Inc.

versions of the Decision Memorandum are identical in content.

Changes Since the First Partial Preliminary Results

Based on our analysis of the comments received, we have made no changes to the *First Partial Preliminary Results*

Final Partial Rescission Based on No Shipments

As discussed in the *First Partial Preliminary Results,* the 14 companies listed in Appendix II each timely certified that it had no shipments during the POR. After we checked the claims with CBP and examined CBP shipment data, the Department announced its intent to rescind the administrative review with respect to these companies in the *First Partial Preliminary Results.* No parties commented on our preliminary intent to rescind. Thus, there is no information or argument on the record of the current review that warrants reconsidering our preliminary decision to rescind. Therefore, we are rescinding this administrative review with respect to all 14 companies listed in Appendix II.

Separate Rates

In proceedings involving non-market economy (NME) countries, the Department begins with a rebuttable presumption that all companies within the country are subject to government control and, thus, should be assigned a single antidumping duty deposit rate. It is the Department's policy to assign all exporters of subject merchandise in an NME country this single rate unless an exporter can demonstrate that it is sufficiently independent so as to be eligible for a separate rate.[4]

As discussed in the *First Partial Preliminary Results,* neither Longtai nor Hongqiao, the two mandatory respondents, responded to the initial questionnaire. Thus, neither of these two companies demonstrated its eligibility for separate rate status and each will be considered part of the PRC-wide entity for purposes of this review. *See* ''Application of Total AFA to the PRC-wide entity'' section, below. In addition, in the *First Partial Preliminary Results,* the Department found five other companies were part of the PRC-wide entity because, although each company was subject to the review, none of these companies submitted separate rate certifications or applications. There is no information on the record of this review that warrants reconsideration of our preliminary decision to consider each of these five companies to be part of the PRC-wide entity. Therefore, the Department has found that each of these five companies and the two uncooperative mandatory respondents to be part of the PRC-wide entity for these final results. *See* Appendix I.

Use of Facts Otherwise Available and Adverse Facts Available (AFA)

Section 776(a) of the Tariff Act of 1930, as amended (the Act) provides that the Department shall apply ''facts otherwise available'' if (1) necessary information is not on the record, or (2) an interested party or any other person (A) withholds information that has been requested, (B) fails to provide information within the deadlines established, or in the form and manner requested by the Department, subject to subsections (c)(1) and (e) of section 782 of the Act, (C) significantly impedes a proceeding, or (D) provides information that cannot be verified as provided by section 782(i) of the Act.

Where the Department determines that a response to a request for information does not comply with the request, section 782(d) of the Act provides that the Department will so inform the party submitting the response and will, to the extent practicable, provide that party the opportunity to remedy or explain the deficiency. If the party fails to remedy the deficiency within the applicable time limits and subject to section 782(e) of the Act, the Department may disregard all or part of the original and subsequent responses, as appropriate.

Section 782(e) of the Act provides that the Department ''shall not decline to consider information that is submitted by an interested party and is necessary to the determination but does not meet all applicable requirements established by the administering authority'' if the information is timely, can be verified, is not so incomplete that it cannot be used, and if the interested party acted to the best of its ability in providing the information. Where all of these conditions are met, the statute requires the Department to use the information supplied if it can do so without undue difficulties.

Section 776(b) of the Act further provides that the Department may use an adverse inference in applying the facts otherwise available when a party has failed to cooperate by not acting to the best of its ability to comply with a request for information. Such an adverse inference may include reliance on information derived from the petition, the final determination, a previous administrative review, or other information placed on the record. For the reasons discussed below, the Department determines that, in accordance with sections 776(a)(1), 776(a)(2) and 776(b) of the Act, the use of AFA is appropriate for the final results with respect to the PRC-wide entity, which includes Longtai and Hongqiao.

Application of Total AFA to the PRC-Wide Entity

Because Longtai and Hongqiao were selected as mandatory respondents, but did not respond to the initial questionnaire, neither company demonstrated its eligibility for separate rate status. Thus, for purposes of these final results, Longtai and Hongqiao are considered part of the PRC-wide entity. Further, because these two companies, which are part of the PRC-wide entity, did not respond to the questionnaire, the Department determines that the PRC-wide entity withheld information requested by the Department in accordance with sections 776(a)(2)(A) and (B) of the Act, and significantly impeded the proceeding in accordance with section 776(a)(2)(C) of the Act.

As a result, the Department is basing the dumping margin of the PRC-wide entity on the facts otherwise available on the record. No other party provided any additional information regarding the PRC-wide entity. In addition, because Longtai and Hongqiao, which are part of the PRC-wide entity, failed to cooperate to the best of their ability, we find the PRC-wide entity did not provide the requested information, which was in the sole possession of the respondents and could not be obtained otherwise.[5] Hence, pursuant to section 776(b) of the Act, the Department has determined that, when selecting from among the facts otherwise available, an adverse inference is warranted with respect to the PRC-wide entity.

Selection of AFA Rate

In deciding which facts to use as AFA, section 776(b) of the Act and 19 CFR § 351.308(c)(1) provide that the

[4] *See Final Determination of Sales at Less Than Fair Value: Sparklers From the People's Republic of China,* 56 FR 20588 (May 6, 1991), as further developed in *Notice of Final Determination of Sales at Less Than Fair Value: Silicon Carbide From the People's Republic of China,* 59 FR 22585 (May 2, 1994).

[5] *See Nippon Steel Corporation* v. *United States,* 337 F.3d 1373, 1383 (Fed. Cir. 2003), where the Court of Appeals for the Federal Circuit (CAFC) provided an explanation of the ''failure to act to the best of its ability'' standard noting that the Department need not show intentional conduct existed on the part of the respondent, but merely that a ''failure to cooperate to the best of a respondent's ability'' existed (*i.e.,* information was not provided ''under circumstances in which it is reasonable to concluded that less than full cooperation has been shown'').

Department may rely on information derived from (1) the petition, (2) a final determination in the investigation, (3) any previous review or determination, or (4) any information placed on the record. The Department's practice is to select an AFA rate that is sufficiently adverse ''as to effectuate the purpose of the facts available rule to induce respondents to provide the Department with complete and accurate information in a timely manner'' and that ensures ''that the party does not obtain a more favorable result by failing to cooperate than if it had cooperated fully.'' [6] Specifically, the Department's practice in reviews, in selecting a rate as total AFA, is to use the highest rate on the record of the proceeding which, to the extent practicable, can be corroborated (assuming the rate is based on secondary information).[7] The Court of International Trade (CIT) and the CAFC have affirmed decisions to select the highest margin from any prior segment of the proceeding as the AFA rate on numerous occasions.[8] In choosing the appropriate balance between providing a respondent with an incentive to respond accurately and imposing a rate that is reasonably related to the respondent's prior commercial activity, selecting the highest prior margin reflects ''a common sense inference that the highest prior margin is the most probative evidence of current margins, because, if it were not so, the importer, knowing of the rule, would have produced current information showing the margin to be less.'' [9] Therefore, as AFA, the Department has assigned the PRC-wide entity a dumping margin of $4.71 per kilogram, the highest calculated per-unit rate on the record of any segment of this proceeding.

Corroboration of Secondary Information Used as AFA

Section 776(c) of the Act provides that, when the Department relies on secondary information rather than on information obtained in the course of an investigation or review, it shall, to the extent practicable, corroborate that information from independent sources that are reasonably at its disposal. Secondary information is defined as information derived from the petition that gave rise to the investigation or review, the final determination concerning the subject merchandise, or any previous review under section 751 of the Act concerning the subject merchandise.[10] To corroborate means that the Department will satisfy itself that the secondary information to be used has probative value.[11] To corroborate secondary information, the Department will, to the extent practicable, examine the reliability and relevance of the information to be used.[12] Independent sources used to corroborate such evidence may include, for example, published price lists, official import statistics and customs data, and information obtained from interested parties during the particular investigation.[13]

The Department has corroborated the $4.71 per-unit rate, the highest rate on the record of any segment of this proceeding applied to the PRC-wide entity. The Department notes that this per-unit rate was calculated in *Garlic 13* [14] using the 376.67 percent *ad valorem* rate contained in the underlying petition [15] and applied in the final results of every subsequent review as the PRC-wide entity rate. Specifically, to assess the probative value of the total AFA rate selected for the PRC-wide entity in an earlier review, the Department compared this 376.67 percent rate to transaction-specific margins of other respondents. This *ad valorem* rate from the petition was corroborated in previously completed administrative review in which the Department found that the 376.67 percent rate for the PRC-wide entity was in the ''range of the highest margins calculated on the record of these reviews.[16]

Similar to the reasons the CIT found the PRC-wide entity rate corroborated in other cases [17] here the Department finds the PRC-wide entity rate to be corroborated. The Department finds this rate to be reliable and relevant, because it (1) constitutes the highest rate from any segment of the proceeding, (2) was applied as the PRC-wide entity rate in the immediately preceding review and has been applied as the PRC-wide entity rate in over a dozen completed reviews, and (3) was corroborated in a prior review using transaction specific margins of the respondents in that review. A more fulsome examination of the Department's corroboration of the PRC-wide entity rate can be found in the Decision Memorandum at Comment 1: Selection and Corroboration of the PRC-wide rate as to the PRC-wide entity.

[6] *See Notice of Final Determination of Sales at Less than Fair Value: Static Random Access Memory Semiconductors From Taiwan,* 63 FR 8909, 8911 (February 23, 1998); *see also Brake Rotors From the People's Republic of China: Final Results and Partial Rescission of the Seventh Administrative Review; Final Results of the Eleventh New Shipper Review,* 70 FR 69937, 69939 (November 18, 2005), and the Statement of Administrative Action accompany the Uruguay Round Agreement Act, H.R. Rep. No. 316, 103d Cong., 2d Sess. 870 (SAA).

[7] *See Glycine from the People's Republic of China: Preliminary Results of Antidumping Duty Administrative Review,* 74 FR 15930, 15934 (April 8, 2009), unchanged in *Glycine From the People's Republic of China: Final Results of Antidumping Duty Administrative Review,* 74 FR 41121 (August 14, 2009); *see also Fujian Lianfu Forestry Co., Ltd.* v. *United States,* 638 F. Supp. 2d 1325, 1336 (CIT August 10, 2009) (''Commerce may, of course, begin its total AFA selection process by defaulting to the highest rate in any segment of the proceeding, but that selection must then be corroborated, to the extent practicable.'').

[8] *See, e.g., KYD, Inc.* v *United States,* 607 F.3d 760, 766–767 (CAFC 2010) (*KYD*); *NSK Ltd.* v. *United States,* 346 F. Supp. 2d 1312, 1335 (CIT 2004) (affirming a 73.55 percent total AFA rate, the highest available dumping margin calculated for a different respondent in the investigation); *Kompass Food Trading International* v. *United States,* 24 CIT 678, 683–84 (2000) (affirming a 51.16 percent total AFA rate, the highest available dumping margin for a different, fully cooperative respondent); and *Shanghai Taoen International Trading Co., Ltd.* v. *United States,* 360 F. Supp. 2d 1339, 1348 (CIT 2005) (affirming a 223.01 percent total AFA rate, the highest available dumping margin for a different respondent in a previous administrative review).

[9] *See KYD,* 607 F.3d at 766, citing *Rhone Poulenc, Inc.* v. *United States,* 899 F.2d 1185, 1190 (CAFC 1990).

[10] *See* SAA.

[11] *See id.*

[12] *See Tapered Roller Bearings and Parts Thereof, Finished and Unfinished, From Japan, and Tapered Roller Bearings, Four Inches or Less in Outside Diameter, and Components Thereof, From Japan; Preliminary Results of Antidumping Duty Administrative Reviews and Partial Termination of Administrative Reviews,* 61 FR 57391, 57392 (November 6, 1996), unchanged in *Tapered Roller Bearings and Parts Thereof, Finished and Unfinished, From Japan, and Tapered Roller Bearings, Four Inches or Less in Outsider Diameter, and Components Thereof, From Japan: Final Results of Antidumping Duty Administrative Reviews and Termination in Part,* 62 FR 11825 (March 13, 1997).

[13] *See Notice of Preliminary Determination of Sales at Less Than Fair Value: High and Ultra-High Voltage Ceramic Station Post Insulators from Japan,* 68 FR 35627 (June 16, 2003), unchanged in *Notice of Final Determination of Sales at Less Than Fair Value: High and Ultra-High Voltage Ceramic Station Post Insulators from Japan,* 68 FR 62560 (November 5, 2003); and *Notice of Final Determination of Sales at Less Than Fair Value: Live Swine From Canada,* 70 FR 12181, 12183–84 (March 11, 2005).

[14] *See Fresh Garlic From the People's Republic of China: Final Results and Partial Rescission of the 13th Antidumping Duty Administrative Review and New Shipper Reviews,* 74 FR 29174 (June 19, 2009) (*Garlic 13*) and accompanying Issues and Decision Memorandum.

[15] We converted the 376.67 percent rate to the $4.71 per-unit rate by multiplying it by the CBP-derived average unit value for subject merchandise entries during the *Garlic 13* POR (excluding the entries from our mandatory and separate rate respondents).

[16] *See Fresh Garlic from the People's Republic of China: Preliminary Results and Partial Rescission of Antidumping Duty Administrative Review and Preliminary Results of New Shipper Reviews,* 70 FR 69942 (November 18, 2005), unchanged in *Fresh Garlic from the People's Republic of China: Final Results and Partial Rescission of Antidumping Duty Administrative Review and Final Results of New Shipper Reviews,* 71 FR 26329 (May 4, 2006).

[17] *See, e.g., Watanabe Group* v. *United States,* Court No. 09–00520 Slip Op. 10–139 (CIT December 22, 2010) and *Peer Bearing Company—Changshan* v. *United States,* 587 F. Supp. 2d 1319 (CIT December 8, 2008).

Final Results of Review

As a result of our review, we determine that the following margin exists for the PRC-wide entity during the period November 1, 2009, through October 31, 2010.[18]

Manufacturer/exporter	Weighted-average margin (dollars per kilogram)
PRC-wide entity (*see* Appendix I)	4.71

Assessment and Cash Deposit Rates

Pursuant to section 751(a)(2)(A) of the Act and 19 CFR 351.212(b), the Department will determine, and CBP shall assess, antidumping duties on all appropriate entries of subject merchandise in accordance with these partial final results of review. The Department will direct CBP to assess a $4.71 per-unit (*i.e.,* per kilogram) assessment rate amount on each entry of the subject merchandise, entered, or withdrawn for entry, during the POR, by companies subject to these partial final results. The Department intends to issue appropriate assessment instructions for such companies directly to CBP 15 days after the publication of this notice in the **Federal Register**.

The following cash deposit requirements will be effective upon publication of these final results of administrative review for all shipments of the subject merchandise entered, or withdrawn from warehouse, for consumption on or after the publication date, as provided for by section 751(a)(2)(C) of the Act: (1) For all PRC exporters of subject merchandise which have not been found to be entitled to a separate rate, the cash deposit rate will be the PRC-wide entity rate of $4.71 per kilogram; and (2) for all non-PRC exporters of subject merchandise which have not received their own rate, the cash deposit rate will be the rate applicable to the PRC exporter that supplied that non-PRC exporter. These requirements, when imposed, shall remain in effect until further notice.

Notification to Importers

This notice also serves as a final reminder to importers of their responsibility under 19 CFR 351.402(f)(2) to file a certificate regarding the reimbursement of antidumping duties prior to liquidation of the relevant entries during this review period. Failure to comply with this requirement could result in the Department's presumption that reimbursement of the antidumping duties occurred and the subsequent assessment of double antidumping duties.

Notification to Interested Parties

This notice also serves as a reminder to parties subject to an administrative protective order (APO) of their responsibility concerning the return or destruction of proprietary information disclosed under APO in accordance with 19 CFR 351.305(a)(3), which continues to govern business proprietary information in this segment of the proceeding. Timely written notification of the return/destruction of APO materials or conversion to judicial protective order is hereby requested. Failure to comply with regulations and terms of an APO is a violation which is subject to sanction.

We are issuing and publishing this notice of these final results in accordance with sections 751(a)(1) and 777(i)(1) of the Act.

Dated: February 17, 2012.

Ronald K. Lorentzen,

Acting Assistant Secretary for Import Administration.

Appendix I

1. Linshu Dading Private Agricultural Products Co., Ltd.
2. Linyi City Kangfa Foodstuff Drinkable Co., Ltd.
3. Shandong Chenhe Int'l Trading Co., Ltd.
4. Shenzhen Greening Trading Co., Ltd.
5. Sunny Import & Export Limited
6. Shandong Longtai Fruits and Vegetables Co., Ltd.
7. Weifang Hongqiao International Logistic Co., Ltd.

Appendix II

1. Jining Yifa Garlic Produce Co., Ltd.
2. Jining Yongjia Trade Co., Ltd.
3. Jinxiang Chengda Import & Export Co., Ltd.
4. Jinxiang Hejia Co., Ltd.
5. Jinxiang Yuanxin Import & Export Co., Ltd.
6. Qingdao Sea-Line International Trading Co., Ltd.
7. Qingdao Tiantaixing Foods Co., Ltd.
8. Shandong Wonderland Organic Food Co., Ltd.
9. Shanghai LJ International Trading Co., Ltd.
10. Shenzhen Bainong Co., Ltd.
11. Weifang Chenglong Import & Export Co., Ltd.
12. XuZhou Simple Garlic Industry Co., Ltd.
13. Zhengzhou Huachao Industrial Co., Ltd.
14. Zhengzhou Yuanli Trading Co., Ltd.

Appendix III

Comment 1: Selection and Corroboration of the PRC-wide entity rate as to the PRC-entity

Comment 2: Respondent Selection Process in Reviews

[FR Doc. 2012–4486 Filed 2–24–12; 8:45 am]

BILLING CODE 3510–DS–P

[18] As discussed in the *First Partial Preliminary Results,* the Department selected four mandatory respondents. In the *First Partial Preliminary Results,* the Department found Longtai and Hongqiao to be part of the PRC-wide entity.

DEPARTMENT OF COMMERCE

International Trade Administration

[A–570–863]

Honey From the People's Republic of China: Extension of Time Limit for Final Results of the Antidumping Duty Administrative Review

AGENCY: Import Administration, International Trade Administration, Department of Commerce.

DATES: *Effective Date:* February 27, 2012.

FOR FURTHER INFORMATION CONTACT: Catherine Bertrand, AD/CVD Operations, Office 9, Import Administration, International Trade Administration, Department of Commerce, 14th Street and Constitution Avenue NW., Washington, DC 20230; telephone: (202) 482–3207.

Background

On January 3, 2012, the Department of Commerce (''Department'') published the notice preliminarily rescinding the antidumping duty administrative review on honey from the People's Republic of China (''PRC''), covering the period December 12, 2009, through November 30, 2010. *See Honey From the People's Republic of China: Preliminary Rescission of the Administrative Review,* 77 FR 79 (January 3, 2012). The final results are currently due on May 2, 2012.

Extension of Time Limits for Final Results

Section 751(a)(3)(A) of the Tariff Act of 1930, as amended (''Act''), requires the Department to issue the final results in an administrative review of an antidumping duty order 120 days after the date on which the preliminary results are published. The Department may, however, extend the deadline for completion of the final results of an administrative review to 180 days if it determines it is not practicable to complete the review within the foregoing time period. *See* section 751(a)(3)(A) of the Act and 19 CFR 351.213(h)(2).

The Department requires additional time to complete this review because the Department must fully analyze and consider significant issues regarding whether the respondent's sales were *bona fide.* Further, the Department extended the due date for submission of the rebuttal comments to the case briefs

at the request of an interested party. Thus, it is not practicable to complete this review within the time specified under the Act. Therefore, we are extending the time for the completion of the final results of this review by 40 days to June 11, 2012.

This notice is published in accordance with sections 751(a)(1) and 777(i)(1) of the Act.

Dated: February 21, 2012.

Christian Marsh,

Deputy Assistant Secretary for Antidumping and Countervailing Duty Operations.

[FR Doc. 2012–4490 Filed 2–24–12; 8:45 am]

BILLING CODE 3510–DS–P

DEPARTMENT OF COMMERCE

International Trade Administration

Initiation of Antidumping and Countervailing Duty Administrative Reviews and Request for Revocation in Part

AGENCY: Import Administration, International Trade Administration, Department of Commerce.

SUMMARY: The Department of Commerce (''the Department'') has received requests to conduct administrative reviews of various antidumping and countervailing duty orders and findings with January anniversary dates. In accordance with the Department's regulations, we are initiating those administrative reviews.

DATES: *Effective Date:* February 27, 2012.

FOR FURTHER INFORMATION CONTACT: Brenda E. Waters, Office of AD/CVD Operations, Customs Unit, Import Administration, International Trade Administration, U.S. Department of Commerce, 14th Street and Constitution Avenue NW., Washington, DC 20230, telephone: (202) 482–4735.

SUPPLEMENTARY INFORMATION:

Background

The Department has received timely requests, in accordance with 19 CFR 351.213(b), for administrative reviews of various antidumping and countervailing duty orders and findings with January anniversary dates. With respect to the antidumping duty order on Wooden Bedroom Furniture from the People's Republic of China, the initiation of the antidumping duty administrative review for that case is being published in a separate initiation notice.

All deadlines for the submission of various types of information, certifications, or comments or actions by the Department discussed below refer to the number of calendar days from the applicable starting time.

Notice of No Sales

If a producer or exporter named in this notice of initiation had no exports, sales, or entries during the period of review (''POR''), it must notify the Department within 60 days of publication of this notice in the **Federal Register**. All submissions must be filed electronically at *http://iaaccess.trade.gov* in accordance with 19 CFR 351.303. *See Antidumping and Countervailing Duty Proceedings: Electronic Filing Procedures; Administrative Protective Order Procedures,* 76 FR 39263 (July 6, 2011). Such submissions are subject to verification in accordance with section 782(i) of the Tariff Act of 1930, as amended (''Act''). Further, in accordance with 19 CFR 351.303(f)(3)(ii), a copy of each request must be served on the petitioner and each exporter or producer specified in the request.

Respondent Selection

In the event the Department limits the number of respondents for individual examination for administrative reviews, the Department intends to select respondents based on U.S. Customs and Border Protection (''CBP'') data for U.S. imports during the POR. We intend to release the CBP data under Administrative Protective Order (''APO'') to all parties having an APO within seven days of publication of this initiation notice and to make our decision regarding respondent selection within 21 days of publication of this **Federal Register** notice. The Department invites comments regarding the CBP data and respondent selection within five days of placement of the CBP data on the record of the applicable review.

In the event the Department decides it is necessary to limit individual examination of respondents and conduct respondent selection under section 777A(c)(2) of the Act:

In general, the Department has found that determinations concerning whether particular companies should be ''collapsed'' (*i.e.,* treated as a single entity for purposes of calculating antidumping duty rates) require a substantial amount of detailed information and analysis, which often require follow-up questions and analysis. Accordingly, the Department will not conduct collapsing analyses at the respondent selection phase of this review and will not collapse companies at the respondent selection phase unless there has been a determination to collapse certain companies in a previous segment of this antidumping proceeding (*i.e.,* investigation, administrative review, new shipper review or changed circumstances review). For any company subject to this review, if the Department determined, or continued to treat, that company as collapsed with others, the Department will assume that such companies continue to operate in the same manner and will collapse them for respondent selection purposes. Otherwise, the Department will not-collapse companies for purposes of respondent selection. Parties are requested to (a) identify which companies subject to review previously were collapsed, and (b) provide a citation to the proceeding in which they were collapsed. Further, if companies are requested to complete the Quantity and Value Questionnaire for purposes of respondent selection, in general each company must report volume and value data separately for itself. Parties should not include data for any other party, even if they believe they should be treated as a single entity with that other party. If a company was collapsed with another company or companies in the most recently completed segment of this proceeding where the Department considered collapsing that entity, complete quantity and value data for that collapsed entity must be submitted.

Deadline for Withdrawal of Request for Administrative Review

Pursuant to 19 CFR 351.213(d)(1), a party that has requested a review may withdraw that request within 90 days of the date of publication of the notice of initiation of the requested review. The regulation provides that the Department may extend this time if it is reasonable to do so. In order to provide parties additional certainty with respect to when the Department will exercise its discretion to extend this 90-day deadline, interested parties are advised that, with regard to reviews requested on the basis of anniversary months on or after August 2011, the Department does not intend to extend the 90-day deadline unless the requestor demonstrates that an extraordinary circumstance has prevented it from submitting a timely withdrawal request. Determinations by the Department to extend the 90-day deadline will be made on a case-by-case basis.

Separate Rates

In proceedings involving non-market economy (''NME'') countries, the Department begins with a rebuttable presumption that all companies within the country are subject to government

control and, thus, should be assigned a single antidumping duty deposit rate. It is the Department's policy to assign all exporters of merchandise subject to an administrative review in an NME country this single rate unless an exporter can demonstrate that it is sufficiently independent so as to be entitled to a separate rate.

To establish whether a firm is sufficiently independent from government control of its export activities to be entitled to a separate rate, the Department analyzes each entity exporting the subject merchandise under a test arising from the *Final Determination of Sales at Less Than Fair Value: Sparklers from the People's Republic of China,* 56 FR 20588 (May 6, 1991), as amplified by *Final Determination of Sales at Less Than Fair Value: Silicon Carbide from the People's Republic of China,* 59 FR 22585 (May 2, 1994). In accordance with the separate rates criteria, the Department assigns separate rates to companies in NME cases only if respondents can demonstrate the absence of both *de jure* and *de facto* government control over export activities.

All firms listed below that wish to qualify for separate rate status in the administrative reviews involving NME countries must complete, as appropriate, either a separate rate application or certification, as described below. For these administrative reviews, in order to demonstrate separate rate eligibility, the Department requires entities for whom a review was requested, that were assigned a separate rate in the most recent segment of this proceeding in which they participated, to certify that they continue to meet the criteria for obtaining a separate rate. The Separate Rate Certification form will be available on the Department's Web site at *http://www.trade.gov/ia* on the date of publication of this **Federal Register** notice. In responding to the certification, please follow the ''Instructions for Filing the Certification'' in the Separate Rate Certification. Separate Rate Certifications are due to the Department no later than 60 calendar days after publication of this **Federal Register** notice. The deadline and requirement for submitting a Certification applies equally to NME-owned firms, wholly foreign-owned firms, and foreign sellers who purchase and export subject merchandise to the United States.

Entities that currently do not have a separate rate from a completed segment of the proceeding [1] should timely file a Separate Rate Application to demonstrate eligibility for a separate rate in this proceeding. In addition, companies that received a separate rate in a completed segment of the proceeding that have subsequently made changes, including, but not limited to, changes to corporate structure, acquisitions of new companies or facilities, or changes to their official company name,[2] should timely file a Separate Rate Application to demonstrate eligibility for a separate rate in this proceeding. The Separate Rate Status Application will be available on the Department's Web site at *http://www.trade.gov/ia* on the date of publication of this **Federal Register** notice. In responding to the Separate Rate Status Application, refer to the instructions contained in the application. Separate Rate Status Applications are due to the Department no later than 60 calendar days of publication of this **Federal Register** notice. The deadline and requirement for submitting a Separate Rate Status Application applies equally to NME-owned firms, wholly foreign-owned firms, and foreign sellers that purchase and export subject merchandise to the United States.

For exporters and producers who submit a separate-rate status application or certification and subsequently are selected as mandatory respondents, these exporters and producers will no longer be eligible for separate rate status unless they respond to all parts of the questionnaire as mandatory respondents.

Initiation of Reviews

In accordance with 19 CFR 351.221(c)(1)(i), we are initiating administrative reviews of the following antidumping and countervailing duty orders and findings. We intend to issue the final results of these reviews not later than January 31, 2013.

	Period to be reviewed
Antidumping Duty Proceedings	
None.	
Countervailing Duty Proceedings	
The People's Repubic of China:.	
Certain Oil Country Tubular Goods, C–570–944	1/1/11–12/31/11
Jiangsu Chengde Steel Tube Share Co., Ltd.	
Wuxi Seamless Oil Pipe Co., Ltd..	
Suspension Agreements	
None.	

During any administrative review covering all or part of a period falling between the first and second or third and fourth anniversary of the publication of an antidumping duty order under 19 CFR 351.211 or a determination under 19 CFR 351.218(f)(4) to continue an order or suspended investigation (after sunset review), the Secretary, if requested by a domestic interested party within 30 days of the date of publication of the notice of initiation of the review, will determine, consistent with *FAG Italia* v. *United States,* 291 F.3d 806 (Fed Cir. 2002), as appropriate, whether antidumping duties have been absorbed by an exporter or producer subject to the review if the subject merchandise is sold in the United States through an importer that is affiliated with such exporter or producer. The request must include the name(s) of the exporter or producer for which the inquiry is requested.

For the first administrative review of any order, there will be no assessment of antidumping or countervailing duties on entries of subject merchandise entered, or withdrawn from warehouse, for consumption during the relevant provisional-measures ''gap'' period, of the order, if such a gap period is applicable to the period of review.

Interested parties must submit applications for disclosure under administrative protective orders in accordance with 19 CFR 351.305. On January 22, 2008, the Department published *Antidumping and Countervailing Duty Proceedings: Documents Submission Procedures; APO Procedures,* 73 FR 3634 (January 22, 2008). Those procedures apply to administrative reviews included in this notice of initiation. Parties wishing to participate in any of these administrative reviews should ensure that the meet the requirements of these procedures (*e.g.*, the filing of separate letters of appearance as discussed at 19 CFR 351.103(d)).

[1] Such entities include entities that have not participated in the proceeding, entities that were preliminarily granted a separate rate in any currently incomplete segment of the proceeding (*e.g.*, an ongoing administrative review, new shipper review, *etc.*) and entities that lost their separate rate in the most recently complete segment of the proceeding in which they participated.

[2] Only changes to the official company name, rather than trade names, need to be addressed via a Separate Rate Application. Information regarding new trade names may be submitted via a Separate Rate Certification.

Any party submitting factual information in an antidumping duty or countervailing duty proceeding must certify to the accuracy and completeness of that information. *See* section 782(b) of the Act. Parties are hereby reminded that revised certification requirements are in effect for company/government officials as well as their representatives in all segments of any antidumping duty or countervailing duty proceedings initiated on or after March 14, 2011. *See Certification of Factual Information to Import Administration During Antidumping and Countervailing Duty Proceedings: Interim Final Rule,* 76 FR 7491 (February 10, 2011) (''*Interim Final Rule*''), amending 19 CFR 351.303(g)(1) and (2). The formats for the revised certifications are provided at the end of the *Interim Final Rule.* The Department intends to reject factual submissions in any proceeding segments initiated on or after March 14, 2011 if the submitting party does not comply with the revised certification requirements.

These initiations and this notice are in accordance with section 751(a) of the Act (19 U.S.C. 1675(a)) and 19 CFR 351.221(c)(1)(i).

Dated: February 21, 2012.

Christian Marsh,

Deputy Assistant Secretary for Antidumping and Countervailing Duty Operations.

[FR Doc. 2012–4518 Filed 2–24–12; 8:45 am]

BILLING CODE 3510–DS–P

DEPARTMENT OF COMMERCE

National Oceanic and Atmospheric Administration

RIN 0648–XB032

Notice of Availability of a Draft Environmental Assessment for the Issuance of Incidental Harassment Authorizations in the U.S. Beaufort and Chukchi Seas

AGENCY: National Marine Fisheries Service (NMFS), National Oceanic and Atmospheric Administration (NOAA), Commerce.

ACTION: Notice of availability of a Draft Environmental Assessment; request for comments.

SUMMARY: NMFS announces the availability of the ''Draft Environmental Assessment (DEA) for the Issuance of Incidental Harassment Authorizations for the Take of Marine Mammals by Harassment Incidental to Conducting Exploratory Drilling Programs in the U.S. Beaufort and Chukchi Seas.'' Publication of this notice begins the official public comment period for this DEA. The purpose of the DEA is to evaluate, in compliance with the National Environmental Policy Act (NEPA), the potential direct, indirect, and cumulative impacts of issuing Incidental Harassment Authorizations (IHAs) to Shell for the take of marine mammals incidental to offshore oil and gas exploratory drilling programs in the U.S. Beaufort and Chukchi Seas pursuant to the Marine Mammal Protection Act (MMPA).

DATES: Comments and information must be received no later than March 28, 2012.

ADDRESSES: Comments on the DEA should be addressed to Michael Payne, Chief, Permits and Conservation Division, Office of Protected Resources, National Marine Fisheries Service, 1315 East West Highway, Silver Spring, MD 20910. The mailbox address for providing email comments is *ITP.Nachman@noaa.gov.* NMFS is not responsible for email comments sent to addresses other than the one provided here. Comments sent via email, including all attachments, must not exceed a 25-megabyte file size.

A copy of the DEA may be obtained by writing to the address specified above, telephoning the contact listed below (see **FOR FURTHER INFORMATION CONTACT**), or visiting the internet at: *http://www.nmfs.noaa.gov/pr/permits/incidental.htm.* Documents cited in this notice may also be viewed, by appointment, during regular business hours, at the aforementioned address.

FOR FURTHER INFORMATION CONTACT: Candace Nachman, Office of Protected Resources, NMFS, (301) 427–8401.

SUPPLEMENTARY INFORMATION: Sections 101(a)(5)(A) and (D) of the MMPA (16 U.S.C. 1361 *et seq.*) direct the Secretary of Commerce to allow, upon request, the incidental, but not intentional taking of small numbers of marine mammals by U.S. citizens who engage in a specified activity (other than commercial fishing) within a specified geographical region if certain findings are made and either regulations are issued or, if the taking is limited to harassment, a notice of proposed authorization is provided to the public for review. The term ''take'' under the MMPA means ''to harass, hunt, capture, kill or collect, or attempt to harass, hunt, capture, kill or collect.'' Except with respect to certain activities not pertinent here, the MMPA defines ''harassment'' as ''any act of pursuit, torment, or annoyance which (i) has the potential to injure a marine mammal or marine mammal stock in the wild [Level A harassment]; or (ii) has the potential to disturb a marine mammal or marine mammal stock in the wild by causing disruption of behavioral patterns, including, but not limited to, migration, breathing, nursing, breeding, feeding, or sheltering [Level B harassment].''

Authorization for incidental takings shall be granted if NMFS finds that the taking will have a negligible impact on the species or stock(s), will not have an unmitigable adverse impact on the availability of the species or stock(s) for subsistence uses (where relevant), and if the permissible methods of taking and requirements pertaining to the mitigation, monitoring and reporting of such takings are set forth. NMFS has defined ''negligible impact'' in 50 CFR 216.103 as ''* * * an impact resulting from the specified activity that cannot be reasonably expected to, and is not reasonably likely to, adversely affect the species or stock through effects on annual rates of recruitment or survival.''

In accordance with NEPA, the Council on Environmental Quality's implementing regulations, and NOAA Administrative Order 216–6, NMFS has prepared this DEA to evaluate the potential direct, indirect, and cumulative effects on the human environment that may result from the issuance of IHAs pursuant to section 101(a)(5)(D) of the MMPA to Shell Offshore Inc. and Shell Gulf of Mexico Inc. (collectively ''Shell'') for the take of marine mammals incidental to conducting offshore exploratory drilling programs in the U.S. Beaufort and Chukchi Seas. NMFS published Notices of Proposed IHAs on Shell's Beaufort and Chukchi Sea exploratory drilling programs for public comment on November 7, 2011, and November 9, 2011, respectively (76 FR 68974 and 76 FR 69958), which contained analyses of the proposed specified activities on marine mammals, their habitats, and the availability of marine mammals for subsistence uses.

NMFS requests comment on our analysis contained in the DEA regarding the potential effects of the proposed action of issuing IHAs for the specified activities on the human environment and any other aspects of the DEA. Please include, with your comments, any supporting data or literature citations to help inform our final decision on Shell's request for MMPA authorizations.

Dated: February 21, 2012.

James H. Lecky,

Director, Office of Protected Resources, National Marine Fisheries Service.

[FR Doc. 2012–4511 Filed 2–24–12; 8:45 am]

BILLING CODE 3510–22–P

DEPARTMENT OF COMMERCE

National Oceanic and Atmospheric Administration

[XRIN 0648–XA976]

Taking of Threatened or Endangered Marine Mammals Incidental to Commercial Fishing Operations; Listing of Fisheries

AGENCY: National Marine Fisheries Service (NMFS), National Oceanic and Atmospheric Administration (NOAA), Commerce.

ACTION: Notice.

SUMMARY: The Marine Mammal Protection Act (MMPA) requires NMFS to publish in the **Federal Register** a list of fisheries that have been authorized to take threatened or endangered marine mammals. A list of such fisheries was published December 29, 2010, which authorized the taking of certain marine mammals listed as threatened or endangered under the Endangered Species Act (ESA) incidental to commercial fishing. With issuance of this notice, NMFS adds West Coast groundfish fisheries to this list for one stock of marine mammals—the Eastern U.S. stock of Steller sea lions.

ADDRESSES: Reference material for this determination is available on the Internet at the following address: *http://www.alaskafisheries.noaa.gov/index/analyses/analyses.asp.* The Recovery plan for Steller sea lions is available on the Internet at the following address: *http://www.nmfs.noaa.gov/pr/pdfs/recovery/stellersealion.pdf.*

Copies of the reference materials may also be obtained from the Protected Resources Division, NMFS, Northwest Region, Protected Resources Division, 7600 Sand Point Way NE. Attention—Donna Darm, Assistant Regional Administrator.

FOR FURTHER INFORMATION CONTACT: Lynne Barre, NMFS Northwest Region, (206) 526–4745; Kristy Long, NMFS Office of Protected Resources, (301) 427–8440.

SUPPLEMENTARY INFORMATION:

Background

Under the MMPA, section 101(a)(5)(E) NMFS shall allow the taking of marine mammals from species or stocks listed as threatened or endangered under the ESA (16 U.S.C. 1531 *et seq.*) incidental to commercial fishing operations if NMFS determines that: (1) Incidental mortality and serious injury will have a negligible impact on the affected species or stock; (2) a recovery plan has been developed or is being developed for such species or stock under the ESA; and (3) where required under section 118 of the MMPA, a monitoring program has been established, vessels engaged in such fisheries are registered in accordance with section 118 of the MMPA, and a take reduction plan has been developed or is being developed for such species or stock.

On December 29, 2010, NMFS issued a 3-year permit to participants in Alaska groundfish fisheries under MMPA section 101(a)(5)(E) for the incidental taking of marine mammal stocks listed under the ESA, including the threatened Eastern U.S. stock of Steller sea lions (75 FR 81972). Along with issuing the permit, NMFS made a final Negligible Impact Determination (NID), identified the recovery plan and described monitoring plans satisfying the three criteria listed above. The notice included a list of fisheries that have been authorized to take threatened or endangered species. The NID included an analysis of impacts from West Coast groundfish fisheries on the Eastern U.S. stock of Steller sea lions and with this notice, NMFS is adding West Coast groundfish fisheries (including CA set gill net, CA/OR/WA salmon troll, WA/OR/CA groundfish, bottomfish longline/set line, WA/OR North Pacific halibut longline/set line, CA halibut bottom trawl, WA/OR/CA shrimp trawl, WA/OR/CA groundfish trawl, CA coonstripe shrimp, rock crab, tanner crab pot or trap, and WA groundfish, bottomfish jig) to the previous list of fisheries published on December 29, 2010, for the Eastern U.S. stock of Steller sea lions.

Negligible Impact Determination

Prior to issuing a permit to take ESA-listed marine mammals incidental to commercial fishing, NMFS must determine if the mortality and serious injury incidental to commercial fisheries will have a negligible impact on the affected species or stocks of marine mammals. The final NID (December 29, 2010; 75 FR 81972) for the Eastern U.S. stock of Steller sea lions is available at: *http://www.alaskafisheries.noaa.gov/index/analyses/analyses.asp.*

The minimum estimated mortality and serious injury rate incidental to commercial fisheries (both U.S. and Canadian) is 25.6 Eastern U.S. stock Steller sea lions per year. This estimate considered interactions with all U.S. fisheries, including observer data from the WA/OR/CA groundfish trawl fishery. The estimated mortality and serious injury rate due to other human related sources is 15.1 animals per year. Based on the status information in the stock assessment report (Allen and Angliss 2010), the current level of Potential Biological Removal (PBR) for Eastern U.S. stock Steller sea lions is 2,378 animals. The total human related mortality (25.6 + 15.1) is 40.7 per year which is less than 10 percent of this stock's PBR (237.8 animals). Therefore, NMFS determined that the annual mortality and serious injury incidental to commercial fisheries will have a negligible impact on the Eastern U.S. stock of Steller sea lions (December 29, 2010; 75 FR 81972).

Recovery Plans

A Recovery Plan for Steller sea lions has been completed and is available on the Internet at the following address: *http://www.nmfs.noaa.gov/pr/pdfs/recovery/stellersealion.pdf.* Accordingly, the requirement to have recovery plans in place or being developed is satisfied.

Monitoring Program

MMPA section 118(c)(5)(A) provides that registration of vessels in fisheries should, after appropriate consultations, be integrated and coordinated to the maximum extent feasible with existing fisher licenses, registrations, and related programs. West Coast groundfish fisheries are considered Category III with respect to Steller sea lions and therefore, no permit or registration is required, however, reports of incidental mortality or injury of marine mammals are required. The Marine Mammal Authorization Program which provides reporting requirements and forms has been integrated into the state fishery permit programs.

Take Reduction Plans

Subject to available funding, MMPA section 118 requires a Take Reduction Plan (TRP) in cases where a strategic stock interacts with a Category I or II fishery. The Eastern U.S. stock of Steller sea lions is designated as a strategic stock under the MMPA because it is listed as threatened under the ESA. The short-term goal of a TRP is to reduce mortality and serious injury of marine mammals incidental to commercial fishing to levels below PBR and has been realized.

The long-term goal of a TRP is to reduce incidental mortality and serious injury to insignificant levels approaching a zero mortality and serious injury rate, taking into account the economics of the fishery, the availability of existing technology, and existing State or regional fishery management plans. Mortality and serious injury of Steller sea lions, Eastern U.S. stock are at an insignificant level, approaching a zero mortality and

serious injury rate (Allen and Angliss, 2010). MMPA section 118(b)(2) states that fisheries maintaining such mortality and serious injury levels are not required to further reduce their mortality and serious injury rates. Because the goals of TRPs are to reduce mortality and serious injury of marine mammals incidental to commercial fishing operations, no TRP is required for this stock.

MMPA section 101(a)(5)(E) requires NMFS to publish in the **Federal Register** a list of fisheries that have been authorized to take threatened or endangered marine mammals. A list of such fisheries was published December 29, 2010 (75 FR 81972), which authorized the taking of certain threatened or endangered marine mammals incidental to commercial fishing. With issuance of this notice, NMFS adds 9 Category III fisheries (including CA set gill net, CA/OR/WA salmon troll, WA/OR/CA groundfish, bottomfish longline/set line, WA/OR North Pacific halibut longline/set line, CA halibut bottom trawl, WA/OR/CA shrimp trawl, WA/OR/CA groundfish trawl, CA coonstripe shrimp, rock crab, tanner crab pot or trap, and WA groundfish, bottomfish jig) to this list for the Eastern U.S. stock of Steller sea lions (Table 1).

TABLE 1—LIST OF FISHERIES AUTHORIZED TO TAKE THREATENED AND ENDANGERED MARINE MAMMALS INCIDENTAL TO FISHING OPERATIONS

Fishery	Category	Marine mammal stock
HI deep-set (tuna target) longline/set line	I	Humpback whale, CNP stock.
Hi shallow-set (swordfish target) longline/set line	II	Humpback whale, CNP stock.
AK Bering Sea/Aleutian Islands flatfish trawl	II	Steller sea lion, Western stock.
AK Bering Sea/Aleutian Island pollock trawl	II	Fin whale, NEP stock; Steller sea lion, Western stock.
AK Bering Sea sablefish pot	II	Humpback whale, WNP stock; Humpback whale, CNP stock.
AK Bering Sea/Aleutian Islands Pacific cod longline fisheries	II	Steller sea lion, Western stock.
AK miscellaneous finfish set gillnet	III	Steller sea lion, Western stock.
AK Gulf of Alaska sablefish longline	III	Sperm whale, NP; Steller sea lion, Eastern stock.
AK halibut longline/set line (State and Federal waters)	III	Steller sea lion, Western stock.
AK Bering Sea/Aleutian Islands Atka mackerel trawl	III	Steller sea lion, Western stock.
AK Bering Sea/Aleutian Islands Pacific cod trawl	III	Steller sea lion, Western stock.
AK Gulf of Alaska Pacific cod trawl	III	Steller sea lion, Western stock.
AK Gulf of Alaska pollock trawl	III	Fin whale, NEP stock; Steller sea lion, Western stock.
CA set gill net	III	None documented.
CA/OR/WA salmon troll	III	None documented.
WA/OR/CA groundfish, bottomfish longline/set line	III	None documented.
WA/OR North Pacific halibut longline/set line	III	None documented.
CA halibut bottom trawl	III	None documented.
WA/OR/CA shrimp trawl	III	None documented.
WA/OR/CA groundfish trawl	III	Steller sea lion, Eastern stock.
CA coonstripe shrimp, rock crab, tanner crab pot or trap	III	None documented.
WA groundfish, bottomfish jig	III	None documented.

Dated: February 17, 2012.

James H. Lecky,

Director, Office of Protected Resources, National Marine Fisheries Service.

[FR Doc. 2012–4513 Filed 2–24–12; 8:45 am]

BILLING CODE 3510–22–P

DEPARTMENT OF DEFENSE

Office of the Secretary

[Docket ID DOD–2012–OS–0024]

Proposed Collection; Comment Request

AGENCY: Office of the Under Secretary of Defense (Personnel and Readiness), DoD.

ACTION: Notice.

SUMMARY: Pursuant to 44 U.S.C. 3506(c)(2)(A) (the Paperwork Reduction Act of 1995, 44 U.S.C. 3501 et seq.) the Office of the Under Secretary of Defense (Personnel and Readiness) announces the following proposed reinstatement of a public information collection and seeks public comment on the provisions thereof. Comments are invited on:

(a) Whether the proposed collection of information is necessary for the proper performance of the functions of the agency, including whether the information shall have practical utility;

(b) The accuracy of the agency's estimate of burden of the proposed information collection;

(c) Ways to enhance the quality, utility, and clarity of the information to be collected; and

(d) Ways to minimize the burden of the information collection on respondents, including through the use of automated collection techniques or other forms of information technology.

DATES: Consideration will be given to all comments received by April 27, 2012.

ADDRESSES: You may submit comments, identified by docket number and title, by any of the following methods:

- *Federal eRulemaking Portal: http://www.regulations.gov.* Follow the instructions for submitting comments.
- *Mail:* Federal Docket Management System Office, 4800 Mark Center Drive, East Tower, 2nd floor, Suite 02G09, Alexandria, VA 22350–3100.

Instructions: All submissions received must include the agency name, docket number and title for this **Federal Register** document. The general policy for comments and other submissions from members of the public is to make these submissions available for public viewing on the Internet at *http://www.regulations.gov* as they are received without change, including any personal identifiers or contact information.

FOR FURTHER INFORMATION CONTACT: To request more information on this proposed information collection or to obtain a copy of the proposal and associated collection instruments, please write to the Office of the Under Secretary of Defense (Personnel and Readiness) (Military Community and Family Policy), ATTN: Mr. James M. Ellis, 4000 Defense Pentagon, Washington, DC 20301–4000 or call (703) 588–0877.

Title, Associated Form, and OMB Control Number: Application for Discharge of Member or Survivor of

Member of Group Certified to Have Performed Active Duty with the Armed Forces of the United States, DD Form 2168, OMB Control Number 0704–0100.

Needs and Uses: This information collection requirement is necessary to implement section 401 of Public Law 95–202 (codified at 38 U.S.C. 106 note), which directs the Secretary of Defense: (1) To determine if civilian employment or contractual service rendered to the Armed Forces of the United States by certain groups shall be considered Active Duty service, and (2) to award members of approved groups an appropriate certificate where the nature and duration of service so merits. This information is collected on DD Form 2168, ''Application for Discharge of Member of Group Certified to have Performed Active Duty with the Armed Forces of the United States,'' which provides the necessary data to assist each of the Military Departments in determining if an applicant was a member of a group which has performed active military service. Those individuals who have been recognized as members of an approved group shall be eligible for benefits administered by the Veterans Administration.

Affected Public: Individuals or households.

Annual Burden Hours: 285 hours.

Number of Respondents: 569.

Responses per Respondent: 1.

Average Burden per Response: .5 hours.

Frequency: On occasion.

SUPPLEMENTARY INFORMATION:

Summary of Information Collection

Section 401 of Public Law 95–202 (codified at 38 U.S.C. 106 note) authorized the Secretary of Defense: (1) To determine if civilian employment or contractual service rendered to the Armed Forces of the United States by certain groups shall be considered active duty service, and (2) to issue members of approved groups an appropriate certificate of service where the nature and duration of service so warrants. Such persons shall be eligible for benefits administered by the Department of Veterans Affairs. The information collected on DD Form 2168, ''Application for Discharge of Member or Survivor of Member Group Certified To Have Performed Duty with the Armed Forces of the United States,'' is necessary to assist the Secretaries of the Military Departments in: (1) Determining if an applicant was a member of an approved group that performed civilian employment or contractual service for the U.S. Armed Forces and (2) to assist in issuing an appropriate certificate of service to the applicant. Information provided by the applicant will include: the name of the group served with; dates and place of service; highest grade/rank/rating held during service; highest pay grade; military installation where ordered to report; specialty/job title(s). If the information requested on a DD Form 2168 is compatible with that of a corresponding approved group, and the applicant can provide supporting evidence, he or she will receive veteran's status in accordance with the provisions of DoD Directive 1000.20E. Information from the DD Form 2168 will be extracted and used to complete the DD Form 214, ''Certificate for Release or Discharge from Active Duty.''

Dated: February 22, 2012.

Aaron Siegel,

OSD Federal Register Liaison Officer, Department of Defense.

[FR Doc. 2012–4466 Filed 2–24–12; 8:45 am]

BILLING CODE 5001–06–P

DEPARTMENT OF DEFENSE

Office of the Secretary

Renewal of Department of Defense Federal Advisory Committees

AGENCY: Department of Defense (DoD).

ACTION: Renewal of Federal Advisory Committee.

SUMMARY: Under the provisions of the Federal Advisory Committee Act of 1972, (5 U.S.C. Appendix), the Government in the Sunshine Act of 1976 (5 U.S.C. 552b), and 41 CFR 102–3.50(d), the Department of Defense gives notice that it is renewing the charter for the Board of Advisors to the Presidents of the Naval Postgraduate School and the Naval War College (hereafter referred to as ''the Board'').

The Board of Advisors to the Presidents of the Naval Postgraduate School and the Naval War College, pursuant to 41 CFR 102–3.50(d), is a discretionary Federal advisory committee established to provide the Secretary of the Navy through the Chief of Naval Operations and the Presidents of the Naval Postgraduate School and the Naval War College, advice and recommendations on items such as, but not limited to, organizational management, curricula, and methods of instructions, facilities, and other matters of interest.

The Secretary of the Navy may act upon the Board's advice and recommendations. The Board shall be comprised of no more than 10 members, who are eminent authorities in the fields of academia, business, national defense and security, the defense industry, and research and analysis. Not less than 50 percent of Board members shall be eminent authorities in the field of academia. Board members shall be appointed by the Secretary of Defense, with annual renewals.

The Board's Chairperson shall be elected by vote of the membership.

The Chief of Naval Personnel and the Commanding General, Training and Education Command, United States Marine Corps, shall serve as ex-officio members of the Board. Board members appointed by the Secretary of Defense, who are not full-time or permanent part-time Federal employees, shall be appointed to serve as experts and consultants under the authority of 5 U.S.C. 3109, and to serve as special government employees.

The Secretary of Defense may approve the appointment of Board members for one to four year terms of service; however, no member, unless authorized by the Secretary of Defense, may serve more than two consecutive terms of service. This same term of service limitation also applies to any DoD authorized subcommittees.

Regardless of the individual's approve term of service; all appointments to the Board shall be renewed on an annual basis. In addition, they shall serve without compensation, except for travel and per diem for official Board-related travel.

Each Board member is appointed to provide advice on behalf of the government on the basis of his or her best judgment without representing any particular point of view and in a manner that is free from conflict of interest.

The Department, when necessary, and consistent with the Board's mission and DoD policies and procedures, may establish subcommittees, task groups, or working groups deemed necessary to support the Board. Establishment of subcommittees will be based upon a written determination, to include terms of reference, by the Secretary of Defense, the Deputy Secretary of Defense, or the advisory committee's sponsor.

The Board shall establish two permanent subcommittees:

a. The Naval Postgraduate School subcommittee shall be comprised of no more than 15 members and shall focus on the Naval Postgraduate School. The Chief of Naval Personnel/Deputy Chief of Naval Operations for Manpower, Personnel, Training and Education Command; the Commanding General USMC Training and Education Command; the Commandant Army War College; the Chief of Naval Research; the President of the National Defense University; and the President of the Air

University, will serve as ex-officio members of the subcommittee. The subcommittee shall meet a minimum of two times annually.

b. The Naval War College subcommittee shall be comprised of no more than 10 members and shall focus on the Naval War College. The Chief of Naval Personnel/Deputy Chief of Naval Operations for Manpower, Personnel, Training and Education will serve as ex-officio member of the subcommittee. The subcommittee shall meet a minimum of two times annually.

These subcommittees shall not work independently of the chartered Board, and shall report all of their recommendations and advice to the Board for full deliberation and discussion. Subcommittees have no authority to make decisions on behalf of the chartered Board; nor can any subcommittees or any of its members update or report directly to the Department of Defense or any Federal officers or employees.

Such subcommittee members shall be appointed in the same manner as the Board members; that is, the Secretary of Defense shall appoint subcommittee members even if the member in question is already a Board member. Subcommittee members, with the approval of the Secretary of Defense, may serve a term of service on the subcommittee of one to four years; however, no member shall serve more than two consecutive terms of service on the subcommittee. Subcommittee members, if not full-time or permanent part-time government employees, shall be appointed in the same manner as the Board members. Such individuals, shall be appointed to serve as experts and consultants under the authority of 5 U.S.C. 3109, and serve as special government employees, whose appointments must be renewed by the Secretary of Defense on an annual basis. With the exception of travel and per diem for official travel, subcommittee members shall serve without compensation.

All subcommittees operate under the provisions of FACA, the Government in the Sunshine Act of 1976 (5 U.S.C. 552b), governing Federal statutes and regulations, and governing DoD policies/procedures.

FOR FURTHER INFORMATION CONTACT: Jim Freeman, Deputy Advisory Committee Management Officer for the Department of Defense, 703–692–5952.

SUPPLEMENTARY INFORMATION: The Board shall meet at the call of the Board's Designated Federal Officer, in consultation with the Board's Chairperson and the Presidents of the Naval Postgraduate School and the Naval War College. The estimated number of Board meetings is one per year.

In addition, the Designated Federal Officer is required to be in attendance at all Board and subcommittee meetings for the entire duration of each and every meeting; however, in the absence of the Designated Federal Officer, the Alternate Designated Federal Officer shall attend the entire duration of the Board or subcommittee meeting.

Pursuant to 41 CFR 102–3.105(j) and 102–3.140, the public or interested organizations may submit written statements to the Board of Advisors to the Presidents of the Naval Postgraduate School and the Naval War College membership about the Board's mission and functions. Written statements may be submitted at any time or in response to the stated agenda of planned meeting of Board of Advisors to the Presidents of the Naval Postgraduate School and the Naval War College.

All written statements shall be submitted to the Designated Federal Officer for the Board of Advisors to the Presidents of the Naval Postgraduate School and the Naval War College, and this individual will ensure that the written statements are provided to the membership for their consideration. Contact information for the Board of Advisors to the Presidents of the Naval Postgraduate School and the Naval War College Designated Federal Officer can be obtained from the GSA's FACA Database—*https://www.fido.gov/facadatabase/public.asp.*

The Designated Federal Officer, pursuant to 41 CFR 102–3.150, will announce planned meetings of the Board of Advisors to the Presidents of the Naval Postgraduate School and the Naval War College. The Designated Federal Officer, at that time, may provide additional guidance on the submission of written statements that are in response to the stated agenda for the planned meeting in question.

Dated: February 22, 2012.

Aaron Siegel,

Alternate OSD Federal Register Liaison Officer, Department of Defense.

[FR Doc. 2012–4454 Filed 2–24–12; 8:45 am]

BILLING CODE 5001–06–P

DEPARTMENT OF DEFENSE

Office of the Secretary

Renewal of Department of Defense Federal Advisory Committees

AGENCY: Department of Defense (DoD).

ACTION: Renewal of Federal Advisory Committee.

SUMMARY: Under the provisions of 10 U.S.C. 2166(e), the Federal Advisory Committee Act of 1972, (5 U.S.C. Appendix), the Government in the Sunshine Act of 1976 (5 U.S.C. 552b), and 41 CFR 102–3.50(a), the Department of Defense gives notice that it is renewing the charter for the Board of Visitors for the Western Hemisphere Institute for Security Cooperation (hereafter referred to as ''the Board'').

The Board shall provide the Secretary of Defense, through the Secretary of the Army, with independent advice and recommendations on matters pertaining to the operations and management of the Institute.

The Board shall: (a) Inquire into the curriculum, instruction, physical equipment, fiscal affairs, and academic methods of the Institute; other matters relating to the Institute that the Board decides to consider; and any other matter that the Secretary of Defense determines appropriate; (b) Review the curriculum to determine whether it adheres to U.S. doctrine, complies with applicable U.S. laws and regulations, and is consistent with U.S. policy goals toward Latin America and the Caribbean; and (c) Determine whether the Institute emphasizes human rights, including the rule of law, due process, civilian control of the military, and the role of the military in a democratic society.

The Board shall report to the Secretary of Defense through the Secretary of the Army.

The Board shall be comprised of no more than fourteen members appointed by the Secretary of Defense. All Board member appointments must be renewed by the Secretary of Defense on an annual basis. The Board shall be comprised of: (a) Two Members of the Senate (the Chair and Ranking Member of the Armed Services Committee or their designees); (b) two Members of the House of Representatives (the Chair and Ranking Members of the Armed Services Committee or their designees); (c) one person designated by the Secretary of State; the senior military officer responsible for training and education in the U.S. Army (or designee); the commanders of the combatant commands with geographic responsibility for the Western Hemisphere (U.S. Northern Command and U.S. Southern Command (or designees); and (d) six persons designated by the Secretary of Defense, including, to the extent practicable, persons from academia, religious

institutions, and human rights communities.

Board members appointed by the Secretary of Defense, who are not full-time or permanent part-time federal employees, shall be appointed to serve as experts and consultants under the authority of 5 U.S.C. 3109 and shall serve as special government employee members. With the exception of travel and per diem for official Board related travel, Board members shall serve without compensation.

The Secretary of Defense may approve the appointment of Board members for one to four year terms of service; however, no member, unless authorized by the Secretary of Defense, may serve more than two consecutive terms of service. This same term of service limitation also applies to any DoD authorized subcommittees.

Whenever possible, appointments shall be staggered to avoid complete turnover of the Board's membership at one time. In addition, the Board may be assisted by non-voting subject matter experts or consultants. These consultants are designated at the request of the Board by the Secretary of the Army with the concurrence of the Secretary of Defense.

Each Board member is appointed to provide advice on behalf of the government on the basis of his or her best judgment without representing any particular point of view and in a manner that is free from conflict of interest.

The Department, when necessary, and consistent with the Board's mission and DoD policies and procedures may establish subcommittees deemed necessary to support the Board. Establishment of subcommittees will be based upon a written determination, to include terms of reference, by the Secretary of Defense, the Deputy Secretary of Defense or the advisory committee's sponsor. Such subcommittees shall not work independently of the chartered Board, and shall report all their recommendations and advice to the Board for full deliberation and discussion. Subcommittees have no authority to make decisions on behalf of the chartered Board; nor can any subcommittee or its members update or report directly to the Department of Defense or any Federal officers or employees.

All subcommittee members shall be appointed in the same manner as the Board members; that is, the Secretary of Defense shall appoint subcommittee members even if the member in question is already a Board member. Subcommittee members, with the approval of the Secretary of Defense, may serve a term of service on the subcommittee of one to four years; however, no member shall serve more than two consecutive terms of service on the subcommittee.

Subcommittee members, if not full-time or part-time government employees, shall be appointed to serve as experts and consultants under the authority of 5 U.S.C. 3109, and shall serve as special government employees, whose appointments must be renewed by the Secretary of Defense on an annual basis. With the exception of travel and per diem for official Board related travel, subcommittee members shall serve without compensation.

All subcommittees operate under the provisions of FACA, the Government in the Sunshine Act of 1976 (5 U.S.C. 552b), governing Federal statutes and regulations, and governing DoD policies/procedures.

FOR FURTHER INFORMATION CONTACT: Jim Freeman, Deputy Advisory Committee Management Officer for the Department of Defense, 703–692–5952.

SUPPLEMENTARY INFORMATION: The Board shall meet at the call of the Board's Designated Federal Officer, in consultation with the Board's Chairperson. The estimated number of Board meetings is one per year.

In addition, the Designated Federal Officer is required to be in attendance at all Board and subcommittee meetings for the entire duration of each and every meeting; however, in the absence of the Designated Federal Officer, the Alternate Designated Federal Officer shall attend the entire duration of the Board or subcommittee meeting.

Pursuant to 41 CFR 102–3.105(j) and 102–3.140, the public or interested organizations may submit written statements to Board of Visitors for the Western Hemisphere Institute for Security Cooperation membership about the Board's mission and functions. Written statements may be submitted at any time or in response to the stated agenda of planned meeting of Board of Visitors for the Western Hemisphere Institute for Security Cooperation.

All written statements shall be submitted to the Designated Federal Officer for the Board of Visitors for the Western Hemisphere Institute for Security Cooperation, and this individual will ensure that the written statements are provided to the membership for their consideration. Contact information for the Board of Visitors for the Western Hemisphere Institute for Security Cooperation Designated Federal Officer can be obtained from the GSA's FACA Database—*https://www.fido.gov/facadatabase/public.asp.*

The Designated Federal Officer, pursuant to 41 CFR 102–3.150, will announce planned meetings of the Board of Visitors for the Western Hemisphere Institute for Security Cooperation. The Designated Federal Officer, at that time, may provide additional guidance on the submission of written statements that are in response to the stated agenda for the planned meeting in question.

Dated: February 22, 2012.

Aaron Siegel,

Alternate OSD Federal Register Liaison Officer, Department of Defense.

[FR Doc. 2012–4440 Filed 2–24–12; 8:45 am]

BILLING CODE 5001–06–P

DEPARTMENT OF DEFENSE

Department of the Navy

Notice of Intent To Prepare an Environmental Impact Statement/Overseas Environmental Impact Statement for Military Readiness Activities in the Northwest Training and Testing Study Area and To Announce Public Scoping Meetings

AGENCY: Department of the Navy, DoD.

ACTION: Notice.

SUMMARY: Pursuant to section 102(2)(c) of the National Environmental Policy Act (NEPA) of 1969, as implemented by the Council on Environmental Quality Regulations (40 Code of Federal Regulations Parts 1500–1508), and Executive Order 12114, the Department of the Navy (DoN) announces its intent to prepare an Environmental Impact Statement (EIS)/Overseas Environmental Impact Statement (OEIS) to assess the potential environmental impacts associated with training and testing military readiness activities conducted in the Northwest Training and Testing (NWTT) Study Area (Study Area). The Study Area is composed of established maritime operating and warning areas in the eastern north Pacific Ocean region, located adjacent to the Northwest coast of the United States, to include the Strait of Juan de Fuca, Puget Sound, and the Behm canal in southeastern Alaska. The Study Area includes four existing range complexes and facilities: The Northwest Training Range Complex (NWTRC), the Naval Undersea Warfare Center (NUWC) Keyport Range Complex, Carr Inlet Operations Area, and the Southeast Alaska Acoustic Measurement Facility (SEAFAC). In addition to these range complexes, the Study Area also includes

pierside locations on Navy bases where sonar maintenance and testing occurs within the Study Area, and inland waters that are not part of the range complexes, where training and testing may occur.

The DoN is preparing this EIS/OEIS to renew current federal regulatory permits and authorizations, address proposed, future training and testing activities not covered under existing permits and authorizations (such as those activities proposed to be conducted in the Carr Inlet Operations Area), and include new platforms and weapons systems training and testing requirements.

The DoN will invite the National Marine Fisheries Service and the U.S. Fish and Wildlife Service to be cooperating agencies in preparation of this EIS and OEIS pursuant to 40 CFR 1501.6.

DATES AND ADDRESSES: Nine public scoping meetings will be held between 5 p.m. and 8 p.m. on:

- Tuesday, March 13, 2012.
  Oak Harbor School District Office, Administrative Services Center Board Room, 350 S. Oak Harbor Street, Oak Harbor, Washington 98277.
- Wednesday, March 14, 2012.
  Quilcene School District Multipurpose Room, 294715 U.S. Highway 101, Quilcene, Washington, 98376.
- Thursday, March 15, 2012.
  Central Kitsap High School Cafeteria, 3700 NW Anderson Hill Road, Silverdale, Washington 98383.
- Friday, March 16, 2012.
  Grays Harbor College HUB, 1620 Edward P. Smith Drive, Aberdeen, Washington 98520.
- Monday, March 19, 2012.
  Tillamook County Fairgrounds Auditorium, 4603 East 3rd Street, Tillamook, Oregon 97141.
- Tuesday, March 20, 2012.
  Hatfield Marine Science Center, 2030 SE Marine Science Drive, Newport, Oregon 97365.
- Thursday, March 22, 2012.
  Eureka Wharfinger Building, 1 Marina Way, Eureka, California 95501.
- Friday, March 23, 2012.
  Fort Bragg Town Hall, 363 North Main Street, Fort Bragg, California 95437.
- Tuesday, March 27, 2012.
  Ted Ferry Civic Center, 888 Venetia Way, Ketchikan, Alaska 99901.

Each of the nine scoping meetings will consist of an informal, open house session with information stations staffed by DoN representatives. Comments will be accepted from the public at all scoping meetings. Meeting details will be announced in local newspapers. Additional information concerning meeting times will be available on the EIS/OEIS web page located at: *http://www.NWTTEIS.com.*

FOR FURTHER INFORMATION CONTACT: Ms. Kimberly Kler, Naval Facilities Engineering Command, Northwest. Attention: NWTT EIS/OEIS, 1101 Tautog Circle, Suite 203, Silverdale, Washington 98315–1101.

SUPPLEMENTARY INFORMATION: The DoN's Proposed Action is to conduct training and testing activities, primarily within existing range complexes, operating areas, testing ranges, and select Navy pierside locations located in the Northwest.

The Study Area combines the at-sea portions (air and sea space) of the following range complexes that were previously analyzed under NEPA: The NWTRC and the NUWC Keyport Range Complex. The Study Area also includes Navy piers within Puget Sound where sonar maintenance and testing occurs, Carr Inlet Operations Area, and SEAFAC.

The air and sea space component of the NWTRC includes the area off the coast of Washington, Oregon, and northern California—out to approximately 250 nautical miles, specific training areas within the Strait of Juan de Fuca and Puget Sound, and the Olympic Military Operations Areas.

The NUWC Range Complex is composed of three geographically distinct range sites; two within Puget Sound and one in the Pacific Ocean. The Keyport Range Site is located in Kitsap County and includes portions of Liberty Bay and Port Orchard Reach (also known as Port Orchard Narrows). The Dabob Bay Range Complex Site is located in Hood Canal and Dabob Bay, in Jefferson, Mason, and Kitsap counties. The Quinault Underwater Tracking Range Site is located in the Pacific Ocean off the coast of Jefferson and Grays Harbor Counties in Washington.

The Carr Inlet Operations Area is located in southern Puget Sound, in an arm of water between Key Peninsula and Gig Harbor Peninsula.

The Southeast Alaska Acoustic Measurement Facility (SEAFAC) is located in the Western Behm Canal in Ketchikan Gateway Borough, Alaska.

The proposed action is to conduct military training and testing activities in the Study Area. The purpose of the Proposed Action is to achieve and maintain military readiness to meet the requirements of Title 10 of the U.S. Code, thereby ensuring the DoN meets its mission to maintain, train and equip combat-ready military forces capable of winning wars, deterring aggression, and maintaining freedom of the seas.

The alternatives analyzed in the NWTT EIS/OEIS are as follows.

(1) No Action Alternative: Baseline training and testing activities, as defined by existing DoN environmental planning documents, including the NWTRC EIS/OEIS and the NUWC Keyport Range Complex Extension EIS/OEIS.

(2) Alternative 1: The alternative consists of the No Action alternative, plus the all-inclusive Study Area, and adjustments to types and levels of activities, from the baseline as necessary to support current and planned DoN training and testing requirements. This Alternative considers:

- activities conducted throughout the Study Area, including testing activities at the Carr Inlet Operations Area and SEAFAC.
- mission requirements associated with force structure changes, including those resulting from the development, testing, and ultimate introduction of new platforms (ships and aircraft), and weapons systems into the fleet.

(3) Alternative 2: Consists of Alternative 1 plus, an increase in the tempo of training and testing activities.

Resource areas that will be addressed because of the potential effects from the Proposed Action include, but are not limited to, ocean and biological resources (including marine mammals and threatened and endangered species), terrestrial resources (including threatened and endangered species), sediments and water quality, air quality, airborne soundscape, cultural resources, transportation, regional economy, recreation, and public health and safety.

The scoping process will be used to identify community concerns and local issues that will be addressed in the EIS/OEIS. Federal agencies, Native American Indian Tribes and Nations, state agencies, local agencies, the public, and interested persons are encouraged to provide comments to the DoN to identify specific issues or topics of environmental concern that the commenter believes the DoN should consider.

All comments, provided orally or in writing at the scoping meetings, will receive the same consideration during EIS/OEIS preparation. Written comments must be postmarked no later than April 16, 2012, and should be mailed to: Ms. Kimberly Kler, Naval Facilities Engineering Command, Northwest, 1101 Tautog Circle, Suite 203, Silverdale, Washington 98315–1101, Attention: NWTT EIS/OEIS Project Manager.

Dated: February 22, 2012.

J.M. Beal,

Office of the Judge Advocate General, U.S. Navy, Federal Register Liaison Officer.

[FR Doc. 2012–4458 Filed 2–24–12; 8:45 am]

BILLING CODE 3810–FF–P

DEPARTMENT OF EDUCATION

Notice of Submission for OMB Review

AGENCY: Department of Education.

ACTION: Comment request.

SUMMARY: The Director, Information Collection Clearance Division, Privacy, Information and Records Management Services, Office of Management, invites comments on the submission for OMB review as required by the Paperwork Reduction Act of 1995 (Pub. L. 104–13).

DATES: Interested persons are invited to submit comments on or before March 28, 2012.

ADDRESSES: Written comments should be addressed to the Office of Information and Regulatory Affairs, Attention: Education Desk Officer, Office of Management and Budget, 725 17th Street NW., Room 10222, New Executive Office Building, Washington, DC 20503, be faxed to (202) 395–5806 or emailed to *oira_submission@omb.eop.gov* with a cc: to *ICDocketMgr@ed.gov.* Please note that written comments received in response to this notice will be considered public records.

SUPPLEMENTARY INFORMATION: Section 3506 of the Paperwork Reduction Act of 1995 (44 U.S.C. chapter 35) requires that the Office of Management and Budget (OMB) provide interested Federal agencies and the public an early opportunity to comment on information collection requests. The OMB is particularly interested in comments which: (1) Evaluate whether the proposed collection of information is necessary for the proper performance of the functions of the agency, including whether the information will have practical utility; (2) Evaluate the accuracy of the agency's estimate of the burden of the proposed collection of information, including the validity of the methodology and assumptions used; (3) Enhance the quality, utility, and clarity of the information to be collected; and (4) Minimize the burden of the collection of information on those who are to respond, including through the use of appropriate automated, electronic, mechanical, or other technological collection techniques or other forms of information technology.

Dated: February 21, 2012.

Darrin A. King,

Director, Information Collection Clearance Division, Privacy, Information and Records Management Services, Office of Management.

Institute of Education Sciences

Type of Review: New.

Title of Collection: Impact Evaluation of Teacher and Leader Evaluation Systems.

OMB Control Number: Pending.

Affected Public: State, Local, or Tribal Government.

Total Estimated Number of Annual Responses: 59.

Total Estimated Annual Burden Hours: 891.

Abstract: This information collection package requests clearance to recruit districts for a study of a performance evaluation system for principals and teachers. The study will provide important implementation and impact information on the kinds of performance evaluation systems currently discussed in federal policy. Study findings will be presented in two reports, one scheduled for release in late 2014 and the other in late 2015.

Copies of the information collection submission for OMB review may be accessed from the RegInfo.gov Web site at *http://www.reginfo.gov/public/do/PRAMain* or from the Department's Web site at *http://edicsweb.ed.gov,* by selecting the ''Browse Pending Collections'' link and by clicking on link number 04758. When you access the information collection, click on ''Download Attachments '' to view. Written requests for information should be addressed to U.S. Department of Education, 400 Maryland Avenue SW, LBJ, Washington, DC 20202–4537. Requests may also be electronically mailed to the Internet address *ICDocketMgr@ed.gov* or faxed to 202–401–0920. Please specify the complete title of the information collection and OMB Control Number when making your request.

Individuals who use a telecommunications device for the deaf (TDD) may call the Federal Information Relay Service (FIRS) at 1–800–877–8339.

[FR Doc. 2012–4375 Filed 2–24–12; 8:45 am]

BILLING CODE 4000–01–P

DEPARTMENT OF EDUCATION

Applications for New Awards; Technology and Media Services for Individuals With Disabilities—Educational Materials in Accessible Formats for Students With Visual Impairments and Other Print Disabilities

AGENCY: Office of Special Education and Rehabilitative Services, Department of Education.

ACTION: Notice.

Overview Information

Technology and Media Services for Individuals With Disabilities—Educational Materials in Accessible Formats for Students With Visual Impairments and Other Print Disabilities

Notice inviting applications for new awards for fiscal year (FY) 2012.

Catalog of Federal Domestic Assistance (CFDA) Number: 84.327D.

DATES:

Applications Available: February 27, 2012.

Deadline for Transmittal of Applications: April 12, 2012.

Deadline for Intergovernmental Review: June 11, 2012.

Full Text of Announcement

I. Funding Opportunity Description

Purpose of Program: The purpose of the Technology and Media Services for Individuals with Disabilities program is to: (1) Improve results for students with disabilities by promoting the development, demonstration, and use of technology; (2) support educational media services activities designed to be of educational value in the classroom for students with disabilities; and (3) provide support for captioning and video description that is appropriate for use in the classroom.

Priority: In accordance with 34 CFR 75.105(b)(2)(v), this priority is from allowable activities specified in the statute (see sections 674(c)(1)(D) and 681(d) of the Individuals with Disabilities Education Act (IDEA) (20 U.S.C. 1474(c)(1)(D) and 1481(D)).

Absolute Priority: For FY 2012, this priority is an absolute priority. Under 34 CFR 75.105(c)(3), we consider only applications that meet this priority.

This priority is:

Technology and Media Services for Individuals With Disabilities—Educational Materials in Accessible Formats for Students With Visual Impairments and Other Print Disabilities

Priority

The purpose of this priority is to fund a cooperative agreement to support the establishment and operation of a project that will provide free educational materials,[1] including textbooks, in accessible media for students who are blind, visually impaired, and print disabled and enrolled in elementary, secondary, postsecondary, or graduate schools.

To be considered for funding under this absolute priority, applicants must meet the application requirements contained in this priority. Any project funded under this absolute priority also must meet the programmatic and administrative requirements specified in the priority.

Application Requirements. An applicant must include in its application—

(a) A logic model that depicts, at a minimum, the goals, activities, outputs, and outcomes of the proposed project. A logic model communicates how a project will achieve its outcomes and provides a framework for both the formative and summative evaluations of the project;

Note: The following Web sites provide more information on logic models: *www.researchutilization.org/matrix/logicmodel_resource3c.html* and *www.tadnet.org/model_and_performance.*

(b) A plan to implement the activities described in the *Project Activities* section of this priority;

(c) A plan, linked to the proposed project's logic model, for a formative evaluation of the proposed project's activities. The plan must describe how the formative evaluation will use clear performance objectives to ensure continuous improvement in the operation of the proposed project, including objective measures of progress in implementing the project and ensuring the quality of products and services;

(d) A budget for a summative evaluation to be conducted by an independent third party;

(e) A budget for attendance at the following:

(1) A one and one half day kick-off meeting to be held in Washington, DC, after receipt of the award, and an annual planning meeting held in Washington, DC, with the Office of Special Education Programs (OSEP) Project Officer during each subsequent year of the project period.

Note: Within 30 days of the award, a post-award teleconference must be held between the OSEP Project Officer and the grantee's project director or other authorized representative. The primary purposes of this meeting will be to review the Department's grantee requirements, discuss the project's planned activities and budget, and confirm the expectations for the project's performance measures and evaluation.

(2) A three-day Project Directors' Conference in Washington, DC, during each year of the project period.

(3) Two two-day trips annually to attend Department briefings, Department-sponsored conferences, and other meetings, as requested by OSEP, and to meet with the OSEP Project Officer and other funded projects for purposes of cross-project collaboration and information exchange; and

(f) A line item in the proposed budget for an annual set-aside of four percent of the grant amount to support emerging needs that are consistent with the proposed project's activities, as those needs are identified in consultation with OSEP.

Note: With approval from the OSEP Project Officer, the project must reallocate any remaining funds from this annual set-aside no later than the end of the third quarter of each budget period.

Project Activities. To meet the requirements of this priority, the project, at a minimum, must conduct the following activities:

(a) Provide educational materials, including textbooks, in accessible formats to State educational agencies (SEAs) and local educational agencies (LEAs) for use by elementary and secondary education students with print disabilities. The educational materials, including any specialized software needed to use the materials, must be provided at no cost to students, families, schools, SEAs, and LEAs. Thus, the project may not assess membership fees to individual students or to institutions, including schools, SEAs, and LEAs.

(b) Provide educational materials in accessible formats for students with print disabilities attending postsecondary and graduate schools. Materials may be provided directly to eligible students[2] or to postsecondary and graduate schools and vocational rehabilitation agencies requesting materials in accessible formats on behalf of eligible students. The accessible educational materials, including any specialized software needed to use the materials, must be provided at no cost to students, postsecondary and graduate schools, and vocational rehabilitation agencies. Thus, the project may not assess fees to individual students or to institutions, including postsecondary schools, graduate schools, and vocational rehabilitation agencies.

(c) Produce high-quality, user-friendly educational materials in accessible formats including, digital text, braille-ready files, and audio formats. At least 50 percent of the audio materials produced must be in text-to-speech audio format. Materials produced as part of this cooperative agreement must include image descriptions, digital images, and graphics.

(d) Develop and implement an innovative plan focused on improving the quality, timeliness, and ease of access to educational materials for students with print disabilities, including, when appropriate, those materials that are included in open educational resources.[3] To the extent feasible, the project must provide for the use of communication and data technologies available today, including handheld devices, smart phones, data pads, etc., and anticipate future needs across the five years in the development of this plan.

(e) Develop and implement cost and efficiency measures for the production of accessible educational materials.

(f) Provide high-quality, up-to-date software needed to use the accessible educational materials, at no cost to students, families, schools, LEAs, SEAs, postsecondary and graduate schools, and vocational rehabilitation agencies. The project must also keep abreast of emerging technologies and implement changes and updates to technology, software, and other materials that meet industry standards.

(g) Provide and implement a detailed digital rights management (DRM) plan that protects the interests of rights holders while maintaining ease of access to the accessible educational materials for students with print disabilities.

[1] For the purposes of this priority, we are using the term ''educational materials'' consistent with the use of this term in section 674(c)(1)(D) of IDEA and to be consistent with the term of art used in the field.

[2] For purposes of this priority, eligible students attending postsecondary and graduate schools are students with a print disability as defined in section 771 of the Higher Education Act of 1965, as amended. Section 771 defines ''student with a print disability'' as ''a student with a disability who experiences barriers to accessing instructional material in nonspecialized formats, including an individual described in section 121(d)(2) of title 17, United States Code.''

[3] For purposes of this priority, ''open educational resources'' are teaching, learning, and research resources that reside in the public domain or have been released under an intellectual property license that permits their free use or repurposing by others.

(h) Develop and implement a plan for consulting with publishers, software developers, other manufacturers of accessible educational materials for individuals with print disabilities, and the National Instructional Materials Access Center (NIMAC)[4] to ensure that the project uses the most efficient, cost-effective technology available to provide timely access to educational materials.

(i) Produce accessible educational materials using files that are compliant with the National Instructional Materials Accessibility Standard (NIMAS).[5]

(j) Develop and implement a plan for increasing SEA and LEA use of the project's resources and accessible educational materials as part of their systems for providing educational materials in accessible formats to students with print disabilities.

(k) Ensure that project activities are conducted in compliance with section 121 of the Copyright Act, as amended: *www.copyright.gov/title17/92chap1.html#121.*

(l) Establish and maintain an advisory committee consisting of SEA and LEA representatives, representatives from community colleges and four-year institutions of higher education, representatives from vocational rehabilitation agencies, parents of individuals with visual impairments and other print disabilities ages birth through 26, consumers with visual impairments and consumers with other print disabilities who use educational materials in accessible formats, and representatives of schools or other institutions where educational materials in accessible formats are used. The purpose of this advisory committee is to provide the project with input and ongoing advice on the project's goals, objectives, program activities, and services. The project must submit the names of proposed members of the advisory committee to OSEP for approval within eight weeks after receipt of the award.

(m) Maintain a Web site that meets government or industry-recognized standards for accessibility and that links to the Web site operated by the Technical Assistance Coordination Center (TACC).[6]

(n) Communicate and collaborate, on an ongoing basis, with OSEP-funded projects, including NIMAS-related projects. Activities could include the joint development of products, training sessions, and materials, and improving the accessible educational materials delivery system to ensure timely and easy access to accessible educational materials.

(o) Maintain ongoing communication with the OSEP Project Officer through bi-monthly phone conferences and email communication.

Fourth and Fifth Years of the Project

In deciding whether to continue funding the project for the fourth and fifth years, the Secretary will consider the requirements of 34 CFR 75.253(a), and in addition—

(a) The recommendation of a review team consisting of experts selected by the Secretary. This review will be conducted during a one-day intensive meeting in Washington, DC, that will be held during the last half of the second year of the project period. The project must budget for travel expenses associated with this one-day intensive review;

(b) The timeliness and effectiveness with which all requirements of the negotiated cooperative agreement have been or are being met by the project; and

(c) The quality, relevance, and usefulness of the project's activities and products and the degree to which the project's activities and products have contributed to increasing the number of eligible students that use AIM and improving the timeliness of delivery of AIM to students with print disabilities.

Waiver of Proposed Rulemaking: Under the Administrative Procedure Act (APA) (5 U.S.C. 553) the Department generally offers interested parties the opportunity to comment on proposed priorities and requirements. Section 681(d) of IDEA, however, makes the public comment requirements of the APA inapplicable to the priority in this notice.

Program Authority: 20 U.S.C. 1474 and 1481.

Applicable Regulations: The Education Department General Administrative Regulations (EDGAR) in 34 CFR parts 74, 75, 77, 79, 80, 81, 82, 84, 85, 86, 97, 98, and 99.

Note: The regulations in 34 CFR part 79 apply to all applicants except federally recognized Indian tribes.

Note: The regulations in 34 CFR part 86 apply to institutions of higher education only.

II. Award Information

Type of Award: Cooperative agreement.

Estimated Available Funds: $6,500,000.

Contingent upon the availability of funds and the quality of applications, we may make additional awards in FY 2013 from the list of unfunded applicants from this competition.

Maximum Award: We will reject any application that proposes a budget exceeding $6,500,000 for a single budget period of 12 months. The Assistant Secretary for Special Education and Rehabilitative Services may change the maximum amount through a notice published in the **Federal Register**.

Estimated Number of Awards: 1.

Note: The Department is not bound by any estimates in this notice.

Project Period: Up to 36 months with an optional additional 24 months based on performance. Applications must include plans for both the 36-month award and the 24-month extension.

III. Eligibility Information

Eligible Applicants: National, nonprofit entities with a proven track record of meeting the needs of students with visual impairments and other print disabilities through services described in section 674(c)(1)(D) of IDEA that have the capacity to produce, maintain, and distribute, in a timely fashion, up-to-date textbooks in digital audio formats to qualified students and that have a demonstrated ability to significantly leverage Federal funds through other public and private contributions, as well as through the expansive use of volunteers (see section 674(d)(2) of IDEA; 17 U.S.C. 121(d)(1)).

2. *Cost Sharing or Matching:* This competition does not require cost sharing or matching.

3. *Other: General Requirements:*

(a) The project funded under this competition must make positive efforts to employ, and advance in employment, qualified individuals with disabilities (see section 606 of IDEA).

(b) The applicant and grant recipient funded under this competition must involve individuals with disabilities or parents of individuals with disabilities ages birth through 26 in planning, implementing, and evaluating the project (see section 682(a)(1)(A) of IDEA).

IV. Application and Submission Information

1. *Address to Request Application Package:* Education Publications Center (ED Pubs), U.S. Department of Education, P.O. Box 22207, Alexandria, VA 22304. Telephone, toll free: 1–877–433–7827. FAX: (703) 605–6794. If you use a telecommunications device for the deaf (TDD) or a text telephone (TTY), call, toll free: 1–877–576–7734.

[4] For more information regarding the NIMAC, please see: *www.nimac.us/.*

[5] For more information regarding the NIMAS, please see: *http://idea.ed.gov/explore/view/p/,root,dynamic,TopicalArea,10,.*

[6] For more information regarding the TACC, please see: *www.tadnet.org.*

You can contact ED Pubs at its Web site, also: *www.EDPubs.gov* or at its email address: *edpubs@inet.ed.gov*.

If you request an application package from ED Pubs, be sure to identify this competition as follows: CFDA number 84.327D.

Individuals with disabilities can obtain a copy of the application package in an accessible format (e.g., braille, large print, audiotape, or compact disc) by contacting the person or team listed under *Accessible Format* in section VIII of this notice.

2. *Content and Form of Application Submission:* Requirements concerning the content of an application, together with the forms you must submit, are in the application package for this competition.

Page Limit: The application narrative (Part III of the application) is where you, the applicant, address the selection criteria that reviewers use to evaluate your application. You must limit Part III to the equivalent of no more than 25 pages, using the following standards:

- A ''page'' is 8.5'' x 11'', on one side only, with 1'' margins at the top, bottom, and both sides.
- Double space (no more than three lines per vertical inch) all text in the application narrative, including titles, headings, footnotes, quotations, references, and captions.
- Use a font that is either 12 point or larger or no smaller than 10 pitch (characters per inch).
- Use one of the following fonts: Times New Roman, Courier, Courier New, or Arial. An application submitted in any other font (including Times Roman or Arial Narrow) will not be accepted.

The page limit does not apply to Part I, the cover sheet; Part II, the budget section, including the narrative budget justification; Part IV, the assurances and certifications; or the one-page abstract, the resumes, the bibliography, the references, or the letters of support. However, the page limit does apply to all of the application narrative section (Part III).

We will reject your application if you exceed the page limit or if you apply other standards and exceed the equivalent of the page limit.

3. *Submission Dates and Times:*

Applications Available: February 27, 2012.

Deadline for Transmittal of Applications: April 12, 2012.

Applications for grants under this competition may be submitted electronically using the *Grants.gov* Apply site (*Grants.gov*), or in paper format by mail or hand delivery. For information (including dates and times) about how to submit your application electronically, or in paper format by mail or hand delivery, please refer to section IV. 7. *Other Submission Requirements* of this notice.

We do not consider an application that does not comply with the deadline requirements.

Individuals with disabilities who need an accommodation or auxiliary aid in connection with the application process should contact the person listed under **FOR FURTHER INFORMATION CONTACT** in section VII of this notice. If the Department provides an accommodation or auxiliary aid to an individual with a disability in connection with the application process, the individual's application remains subject to all other requirements and limitations in this notice.

Deadline for Intergovernmental Review: June 11, 2012.

4. *Intergovernmental Review:* This competition is subject to Executive Order 12372 and the regulations in 34 CFR part 79. Information about Intergovernmental Review of Federal Programs under Executive Order 12372 is in the application package for this competition.

5. *Funding Restrictions:* We reference regulations outlining funding restrictions in the *Applicable Regulations* section of this notice.

6. *Data Universal Numbering System Number, Taxpayer Identification Number, and Central Contractor Registry:* To do business with the Department of Education, you must—

a. Have a Data Universal Numbering System (DUNS) number and a Taxpayer Identification Number (TIN). A DUNS number can be obtained online at *http://fedgov.dnb.com/webform* or by calling the Customer Resource Center at 1–800–234–3867 from 8 a.m.–6 p.m., Monday–Friday;

b. Register both your DUNS number and TIN with the Central Contractor Registry (CCR), the Government's primary registrant database;

c. Provide your DUNS number and TIN on your application; and

d. Maintain an active CCR registration with current information while your application is under review by the Department and, if you are awarded a grant, during the project period.

You can obtain a DUNS number from Dun and Bradstreet. A DUNS number can be created within one business day.

If you are a corporate entity, agency, institution, or organization, you can obtain a TIN from the Internal Revenue Service. If you are an individual, you can obtain a TIN from the Internal Revenue Service or the Social Security Administration. If you need a new TIN, please allow 2–5 weeks for your TIN to become active.

The CCR registration process may take five or more business days to complete. If you are currently registered with the CCR, you may not need to make any changes. However, please make certain that the TIN associated with your DUNS number is correct. Also note that you will need to update your CCR registration on an annual basis. This may take three or more business days to complete.

In addition, if you are submitting your application via Grants.gov, you must (1) be designated by your organization as an Authorized Organization Representative (AOR); and (2) register yourself with Grants.gov as an AOR. Details on these steps are outlined at the following Grants.gov Web page: *www.grants.gov/applicants/get_registered.jsp.*

7. *Other Submission Requirements:* Applications for grants under this competition may be submitted electronically or in paper format by mail or hand delivery.

a. Electronic Submission of Applications

We are participating as a partner in the Governmentwide Grants.gov Apply site. The Educational Materials in Accessible Formats for Students with Visual Impairments and Other Print Disabilities competition, CFDA number 84.327D, is included in this project. We request your participation in Grants.gov.

If you choose to submit your application electronically, you must use the Governmentwide Grants.gov Apply site at *www.Grants.gov.* Through this site, you will be able to download a copy of the application package, complete it offline, and then upload and submit your application. You may not email an electronic copy of a grant application to us.

You may access the electronic grant application for the Educational Materials in Accessible Formats for Students with Visual Impairments and Other Print Disabilities competition at www.Grants.gov. You must search for the downloadable application package for this program by the CFDA number. Do not include the CFDA number's alpha suffix in your search (e.g., search for 84.327, not 84.327D).

Please note the following:

- Your participation in Grants.gov is voluntary.
- When you enter the Grants.gov site, you will find information about submitting an application electronically through the site, as well as the hours of operation.

• Applications received by Grants.gov are date and time stamped. Your application must be fully uploaded and submitted and must be date and time stamped by the Grants.gov system no later than 4:30:00 p.m., Washington, DC time, on the application deadline date. Except as otherwise noted in this section, we will not accept your application if it is received—that is, date and time stamped by the Grants.gov system—after 4:30:00 p.m., Washington, DC time, on the application deadline date. We do not consider an application that does not comply with the deadline requirements. When we retrieve your application from Grants.gov, we will notify you if we are rejecting your application because it was date and time stamped by the Grants.gov system after 4:30:00 p.m., Washington, DC time, on the application deadline date.

• The amount of time it can take to upload an application will vary depending on a variety of factors, including the size of the application and the speed of your Internet connection. Therefore, we strongly recommend that you do not wait until the application deadline date to begin the submission process through Grants.gov.

• You should review and follow the Education Submission Procedures for submitting an application through Grants.gov that are included in the application package for this competition to ensure that you submit your application in a timely manner to the Grants.gov system. You can also find the Education Submission Procedures pertaining to Grants.gov under News and Events on the Department's G5 system home page at *http://www.G5.gov.*

• You will not receive additional point value because you submit your application in electronic format, nor will we penalize you if you submit your application in paper format.

• If you submit your application electronically, you must upload all documents electronically, including all information you typically provide on the following forms: the Application for Federal Assistance (SF 424), the Department of Education Supplemental Information for SF 424, Budget Information—Non-Construction Programs (ED 524), and all necessary assurances and certifications.

• If you submit your application electronically, you must upload any narrative sections and all other attachments to your application as files in a .PDF (Portable Document) read-only, non-modifiable format. Do not upload an interactive or fillable .PDF file. If you upload a file type other than a read-only, non-modifiable .PDF or submit a password-protected file, we will not review that material.

• Your electronic application must comply with any page-limit requirements described in this notice.

• After you electronically submit your application, you will receive from Grants.gov an automatic notification of receipt that contains a Grants.gov tracking number. (This notification indicates receipt by Grants.gov only, not receipt by the Department.) The Department then will retrieve your application from Grants.gov and send a second notification to you by email. This second notification indicates that the Department has received your application and has assigned your application a PR/Award number (an ED-specified identifying number unique to your application).

• We may request that you provide us original signatures on forms at a later date.

Application Deadline Date Extension in Case of Technical Issues with the Grants.gov System: If you are experiencing problems submitting your application through Grants.gov, please contact the Grants.gov Support Desk, toll free, at 1–800–518–4726. You must obtain a Grants.gov Support Desk Case Number and must keep a record of it.

If you are prevented from electronically submitting your application on the application deadline date because of technical problems with the Grants.gov system, we will grant you an extension until 4:30:00 p.m., Washington, DC time, the following business day to enable you to transmit your application electronically or by hand delivery. You also may mail your application by following the mailing instructions described elsewhere in this notice.

If you submit an application after 4:30:00 p.m., Washington, DC time, on the application deadline date, please contact the person listed under **FOR FURTHER INFORMATION CONTACT** in section VII of this notice and provide an explanation of the technical problem you experienced with Grants.gov, along with the Grants.gov Support Desk Case Number. We will accept your application if we can confirm that a technical problem occurred with the Grants.gov system and that that problem affected your ability to submit your application by 4:30:00 p.m., Washington, DC time, on the application deadline date. The Department will contact you after a determination is made on whether your application will be accepted.

Note: The extensions to which we refer in this section apply only to the unavailability of, or technical problems with, the Grants.gov system. We will not grant you an extension if you failed to fully register to submit your application to Grants.gov before the application deadline date and time or if the technical problem you experienced is unrelated to the Grants.gov system.

b. Submission of Paper Applications by Mail

If you submit your application in paper format by mail (through the U.S. Postal Service or a commercial carrier), you must mail the original and two copies of your application, on or before the application deadline date, to the Department at the following address: U.S. Department of Education, Application Control Center, Attention: (CFDA Number 84.327D), LBJ Basement Level 1, 400 Maryland Avenue SW., Washington, DC 20202–4260.

You must show proof of mailing consisting of one of the following:

(1) A legibly dated U.S. Postal Service postmark.

(2) A legible mail receipt with the date of mailing stamped by the U.S. Postal Service.

(3) A dated shipping label, invoice, or receipt from a commercial carrier.

(4) Any other proof of mailing acceptable to the Secretary of the U.S. Department of Education.

If you mail your application through the U.S. Postal Service, we do not accept either of the following as proof of mailing:

(1) A private metered postmark.

(2) A mail receipt that is not dated by the U.S. Postal Service.

If your application is postmarked after the application deadline date, we will not consider your application.

Note: The U.S. Postal Service does not uniformly provide a dated postmark. Before relying on this method, you should check with your local post office.

c. Submission of Paper Applications by Hand Delivery

If you submit your application in paper format by hand delivery, you (or a courier service) must deliver the original and two copies of your application by hand, on or before the application deadline date, to the Department at the following address: U.S. Department of Education, Application Control Center, Attention: (CFDA Number 84.327D), 550 12th Street SW., Room 7041, Potomac Center Plaza, Washington, DC 20202–4260.

The Application Control Center accepts hand deliveries daily between 8:00 a.m. and 4:30:00 p.m., Washington, DC time, except Saturdays, Sundays, and Federal holidays.

Note for Mail or Hand Delivery of Paper Applications: If you mail or hand deliver your application to the Department—

(1) You must indicate on the envelope and—if not provided by the Department—in Item 11 of the SF 424 the CFDA number, including suffix letter, if any, of the competition under which you are submitting your application; and

(2) The Application Control Center will mail to you a notification of receipt of your grant application. If you do not receive this notification within 15 business days from the application deadline date, you should call the U.S. Department of Education Application Control Center at (202) 245–6288.

V. Application Review Information

1. *Selection Criteria:* The selection criteria for this program are from 34 CFR 75.210 and are listed in the application package.

2. *Review and Selection Process:* We remind potential applicants that in reviewing applications in any discretionary grant competition, the Secretary may consider, under 34 CFR 75.217(d)(3), the past performance of the applicant in carrying out a previous award, such as the applicant's use of funds, achievement of project objectives, and compliance with grant conditions. The Secretary may also consider whether the applicant failed to submit a timely performance report or submitted a report of unacceptable quality.

In addition, in making a competitive grant award, the Secretary also requires various assurances including those applicable to Federal civil rights laws that prohibit discrimination in programs or activities receiving Federal financial assistance from the Department of Education (34 CFR 100.4, 104.5, 106.4, 108.8, and 110.23).

3. *Additional Review and Selection Process Factors:* In the past, the Department has had difficulty finding peer reviewers for certain competitions because so many individuals who are eligible to serve as peer reviewers have conflicts of interest. The Standing Panel requirements under IDEA also have placed additional constraints on the availability of reviewers. Therefore, the Department has determined that, for some discretionary grant competitions, applications may be separated into two or more groups and ranked and selected for funding within specific groups. This procedure will make it easier for the Department to find peer reviewers, by ensuring that greater numbers of individuals who are eligible to serve as reviewers for any particular group of applicants will not have conflicts of interest. It also will increase the quality, independence, and fairness of the review process, while permitting panel members to review applications under discretionary grant competitions for which they also have submitted applications. However, if the Department decides to select an equal number of applications in each group for funding, this may result in different cut-off points for fundable applications in each group.

4. *Special Conditions:* Under 34 CFR 74.14 and 80.12, the Secretary may impose special conditions on a grant if the applicant or grantee is not financially stable; has a history of unsatisfactory performance; has a financial or other management system that does not meet the standards in 34 CFR parts 74 or 80, as applicable; has not fulfilled the conditions of a prior grant; or is otherwise not responsible.

VI. Award Administration Information

1. *Award Notices:* If your application is successful, we notify your U.S. Representative and U.S. Senators and send you a Grant Award Notification (GAN). We may notify you informally, also.

If your application is not evaluated or not selected for funding, we notify you.

2. *Administrative and National Policy Requirements:* We identify administrative and national policy requirements in the application package and reference these and other requirements in the *Applicable Regulations* section of this notice.

We reference the regulations outlining the terms and conditions of an award in the *Applicable Regulations* section of this notice and include these and other specific conditions in the GAN. The GAN also incorporates your approved application as part of your binding commitments under the grant.

3. *Reporting:* (a) If you apply for a grant under this competition, you must ensure that you have in place the necessary processes and systems to comply with the reporting requirements in 2 CFR part 170 should you receive funding under the competition. This does not apply if you have an exception under 2 CFR 170.110(b).

(b) At the end of your project period, you must submit a final performance report, including financial information, as directed by the Secretary. If you receive a multi-year award, you must submit an annual performance report that provides the most current performance and financial expenditure information as directed by the Secretary under 34 CFR 75.118. The Secretary may also require more frequent performance reports under 34 CFR 75.720(c). For specific requirements on reporting, please go to *www.ed.gov/fund/grant/apply/appforms/appforms.html.*

4. *Performance Measures:* Under the Government Performance and Results Act of 1993 (GPRA), the Department has established a set of performance measures, including long-term measures, that are designed to yield information on various aspects of the effectiveness and quality of the Technology and Media Services for Individuals with Disabilities program. These measures are included in the application package and focus on the extent to which projects are of high quality, are relevant to improving outcomes of children with disabilities, and contribute to improving outcomes for children with disabilities. We will collect data on these measures from the project funded under this competition. The grantee will be required to report information on its project's performance in its final performance report to the Department (34 CFR 75.590).

5. *Continuation Awards:* In making a continuation award, the Secretary may consider, under 34 CFR 75.253, the extent to which a grantee has made ''substantial progress toward meeting the objectives in its approved application.'' This consideration includes the review of a grantee's progress in meeting the targets and projected outcomes in its approved application, and whether the grantee has expended funds in a manner that is consistent with its approved application and budget. In making a continuation grant, the Secretary also considers whether the grantee is operating in compliance with the assurances in its approved application, including those applicable to Federal civil rights laws that prohibit discrimination in programs or activities receiving Federal financial assistance from the Department (34 CFR 100.4, 104.5, 106.4, 108.8, and 110.23).

VII. Agency Contact

FOR FURTHER INFORMATION CONTACT: David Malouf, U.S. Department of Education, 400 Maryland Avenue SW., room 4063, Potomac Center Plaza (PCP), Washington, DC 20202–2600. Telephone: (202) 245–6253.

If you use a TDD or a TTY, call the Federal Relay Service (FRS), toll free, at 1–800–877–8339.

VIII. Other Information

Accessible Format: Individuals with disabilities can obtain this document and a copy of the application package in an accessible format (e.g., braille, large print, audiotape, or compact disc) by contacting the Grants and Contracts Services Team, U.S. Department of Education, 400 Maryland Avenue SW.,

Room 5075, PCP, Washington, DC 20202–2550. Telephone: (202) 245–7363. If you use a TDD or a TTY, call the FRS, toll free, at 1–800–877–8339.

Electronic Access to This Document: The official version of this document is the document published in the **Federal Register**. Free Internet access to the official edition of the **Federal Register** and the Code of Federal Regulations is available via the Federal Digital System at: *www.gpo.gov/fdsys.* At this site you can view this document, as well as all other documents of this Department published in the **Federal Register**, in text or Adobe Portable Document Format (PDF). To use PDF you must have Adobe Acrobat Reader, which is available free at the site.

You may also access documents of the Department published in the **Federal Register** by using the article search feature at: *www.federalregister.gov.* Specifically, through the advanced search feature at this site, you can limit your search to documents published by the Department.

Dated: February 21, 2012.

Alexa Posny,

Assistant Secretary for Special Education and Rehabilitative Services.

[FR Doc. 2012–4547 Filed 2–24–12; 8:45 am]

BILLING CODE 4000–01–P

DEPARTMENT OF EDUCATION

Applications for New Awards; Training and Information for Parents of Children With Disabilities

AGENCY: Office of Special Education and Rehabilitative Services, Department of Education.

ACTION: Notice.

Overview Information:

Training and Information for Parents of Children with Disabilities.

Notice inviting applications for new awards for fiscal year (FY) 2012.

Catalog of Federal Domestic Assistance (CFDA) Numbers: 84.328C and 84.328M.

Note: This notice invites applications for two separate competitions. For key dates, contact person information, and funding information regarding each competition, see the table in Section II, *Award Information.*

DATES:

Applications Available: See table in Section II, *Award Information.*

Deadline for Transmittal of Applications: See table in Section II, *Award Information.*

Deadline for Intergovernmental Review: See table in Section II, *Award Information.*

Full Text of Announcement

I. Funding Opportunity Description

Purpose of Program: The purpose of this program is to ensure that parents of children with disabilities receive training and information to help improve results for their children.

Priorities: In accordance with 34 CFR 75.105(b)(2)(iv) and (v), these priorities are from allowable activities specified in the statute, or otherwise authorized in the statute (see sections 671, 672 and 681(d) of the Individuals with Disabilities Education Act (IDEA)). Each of the absolute priorities announced in this notice corresponds to a separate competition as follows:

Absolute priority	Competition CFDA No.
1. Community Parent Resource Centers	84.328C
2. Parent Training and Information Centers	84.328M

Absolute Priorities: For FY 2012 and any subsequent year in which we make awards from the list of unfunded applicants from these competitions, these priorities are absolute priorities. Under 34 CFR 75.105(c)(3), for each competition, we consider only applications that meet the absolute priority for that competition.

The priorities are:

Absolute Priority 1—Community Parent Resource Centers (84.328C) and Absolute Priority 2—Parent Training and Information Centers (84.328M).

Background:

Almost 35 years of research and experience has demonstrated that the education of children with disabilities can be made more effective by strengthening the ability of parents to participate fully in the education of their children at school and at home (see section 601(c)(5)(B) of IDEA).

This notice announces two priorities that are designed to help ensure that parents of children with disabilities have the training and information they need to participate in the education of their children.

Absolute Priority 1 supports Community Parent Resource Centers (CPRCs) designed to meet the specific needs of parents who experience significant isolation from available sources of information and support in the geographically defined communities served by the centers. These parents include low-income parents, parents of limited English proficient children, and parents with disabilities—.

Absolute Priority 2 supports Parent Training and Information Centers (PTIs) designed to meet the needs of parents of children with disabilities living in the States, regions of the States, or territories served by the centers, particularly underserved parents and parents of children who may be inappropriately identified as having a disability. Under these priorities, CPRCs and PTIs will, consistent with sections 672 and 671 of IDEA, provide parents of children with disabilities with the training and information they need to enable them to participate cooperatively and effectively in helping their children to—

(a) Meet developmental and functional goals and the challenging academic achievement standards that have been established for all children; and

(b) Be prepared to lead productive, independent adult lives to the maximum extent possible.

The following Web site provides further information on the work of previously funded CPRCs and PTIs: *www.parentcenternetwork.org.*

Absolute Priority 1—Community Parent Resource Centers (84.328C):

To be considered for funding under the CPRC absolute priority, applicants must meet the application requirements contained in the priority. All projects funded under the absolute priority also must meet the programmatic and administrative requirements specified in the priority.

Application Requirements. An applicant must include in its application—

(a) A plan to implement the activities described in the *Project Activities* section of this priority; and

(b) A budget for attendance at the following:

(1) The three-day Leadership Conference in Washington, DC during each year of the project period.

(2) The two-day Regional Technical Assistance for Parent Centers Conference in the region in which the CPRC is located during each year of the project period. Applicants should refer to *www.parentcenternetwork.org* for a list of regions.

Project Activities. To meet the requirements of this priority, the CPRC, at a minimum, must—

(a) Maintain a Web site that meets government or industry-recognized standards for accessibility;

(b) Provide training and information that meets the training and information needs of parents of children with disabilities within the proposed targeted community to be served by the CPRC, particularly underserved parents and parents of children who may be inappropriately identified as having a disability;

Note: For purposes of this priority, ''targeted community to be served'' refers to a geographically defined, local community whose members experience significant isolation from available sources of information and support as a result of cultural, economic, linguistic, or other circumstances deemed appropriate by the Secretary.

(c) Carry out the following activities required of parent training and information centers:

(1) Serve the parents of infants, toddlers, and children, from ages birth through 26, with the full range of disabilities described in section 602(3) of IDEA.

(2) Ensure that the training and information provided meets the needs of low-income parents and parents of limited English proficient children.

(3) Assist parents to—

(i) Better understand the nature of their children's disabilities and their educational, developmental, and transitional needs;

(ii) Communicate effectively and work collaboratively with personnel responsible for providing special education, early intervention services, transition services, and related services;

(iii) Participate in decision-making processes, including those regarding participation in State and local assessments, and the development of individualized education programs under Part B of IDEA and individualized family service plans under Part C of IDEA;

(iv) Obtain appropriate information about the range, type, and quality of—

(A) Options, programs, services, technologies, practices, and interventions based on scientifically based research, to the extent practicable; and

(B) Resources available to assist children with disabilities and their families in school and at home, including information available through the Office of Special Education Programs' (OSEP's) technical assistance and dissemination centers (*www.tadnet.org*) and through communities of practice (*www.tadnet.org/communities*);

(v) Understand the requirements of IDEA related to the provision of education and early intervention services to children with disabilities;

(vi) Participate in activities at the school level that benefit their children; and

(vii) Participate in school reform activities.

(4) In States where the State elects to contract with the CPRC, contract with the State educational agency (SEA) to provide, consistent with paragraphs (B) and (D) of section 615(e)(2) of IDEA, individuals to meet with parents and explain the mediation process.

(5) Assist parents in resolving disputes in the most expeditious and effective way possible, including encouraging the use of, and explaining the benefits of, alternative methods of dispute resolution such as the mediation process described in section 615(e) of IDEA.

(6) Assist parents and students with disabilities to understand their rights and responsibilities under IDEA, including those under section 615(m) of IDEA upon the student's reaching the age of majority (as appropriate under State law).

(7) Assist parents to understand the availability of, and how to effectively use, procedural safeguards provided under IDEA.

(8) Assist parents in understanding, preparing for, and participating in the resolution session described in section 615(f)(1)(B) of IDEA;

(d) Establish cooperative partnerships with any Parent Training and Information Centers (PTIs) and any other CPRCs funded in the State under sections 671 and 672 of IDEA, respectively;

(e) Be designed to meet the specific needs of families who experience significant isolation from available sources of information and support;

(f) Be familiar with the provision of special education, related services, and early intervention services in the CPRC's targeted community to be served to help ensure that children with disabilities are receiving appropriate services;

(g) Respond to requests from OSEP for information about the needs and experiences of parents served by the center to inform OSEP's analysis of State progress towards improving outcomes for children with disabilities;

(h) Annually report to the Department on—

(1) The number and demographics of parents to whom the CPRC provided information and training in the most recently concluded fiscal year, including additional information regarding the parents' unique needs and the levels of service provided to them; and

(2) The effectiveness of strategies used to reach and serve parents, including underserved parents of children with disabilities, by providing evidence of how those parents were served effectively;

(i) Respond to requests from the OSEP-funded National and Regional Parent Technical Assistance Centers (PTACs), and use the technical assistance services of the National and Regional PTACs, in order to serve the families of infants, toddlers, and children with disabilities as efficiently as possible. Regional PTACs are charged with assisting parent centers with administrative and programmatic issues;

(j) In collaboration with OSEP and the National PTAC, participate in an annual collection of program data for the PTIs and CPRCs funded under sections 671 and 672 of IDEA, respectively; and

(k) Maintain ongoing communication with the OSEP Project Officer through phone conversations and email communication.

In addition, the CPRC's board of directors must meet not less than once in each calendar quarter to review the activities for which the award was made and annually submit to the Secretary a written review of the CPRC's activities conducted during the preceding fiscal year.

Competitive Preference Priority: Within this absolute priority, we give competitive preference to applications that meet the following priority. For FY 2012 and any subsequent year in which we make awards from the list of unfunded applicants from this competition, this priority is a competitive preference priority.

Competitive Preference Priority: Under 34 CFR 75.105(c)(2)(i) we award an additional 5 points to an application that meets this priority.

This priority is:

Applicants that propose to design a program with specific activities and services focused on meeting the unique needs of parents who have children enrolled in either high-poverty schools [1] or persistently lowest-achieving schools [2] within the area served by the CPRC.

[1] For the purpose of this notice, the term ''high-poverty school'' means a school in which at least 50 percent of students are eligible for free or reduced-price lunches under the Richard B. Russell National School Lunch Act or in which at least 50 percent of students are from low-income families as determined using one of the criteria specified under section 1113(a)(5) of the Elementary and Secondary Education Act of 1965, as amended. For middle and high schools, eligibility may be calculated on the basis of comparable data from feeder schools. Eligibility as a high-poverty school under this definition is determined on the basis of the most currently available data.

[2] For the purpose of this notice, the term ''persistently lowest-achieving schools means'', as determined by the State—(i) Any Title I school in improvement, corrective action, or restructuring that (a) Is among the lowest-achieving five percent of Title I schools in improvement, corrective action, or restructuring or the lowest-achieving five Title I schools in improvement, corrective action, or restructuring in the State, whichever number of schools is greater; or (b) Is a high school that has had a graduation rate as defined in 34 CFR 200.19(b) that is less than 60 percent over a number of years; and (ii) Any secondary school that is

Note: The 5 points an applicant can earn under this competitive preference priority are in addition to those points awarded under the selection criteria for this competition (see *Selection Criteria* in section V in this notice). That is, an applicant meeting the competitive preference priority could earn a maximum total of 105 points.

Absolute Priority 2—Parent Training and Information Centers (84.328M):

To be considered for funding under the PTIs absolute priority, applicants must meet the application requirements contained in the priority. All projects funded under the absolute priority also must meet the programmatic and administrative requirements specified in the priority.

Application Requirements. An applicant must include in its application—

(a) A logic model that depicts, at a minimum, the goals, activities, outputs, and outcomes of the proposed project. A logic model communicates how a project will achieve its outcomes and provides a framework for both the formative and summative evaluations of the project;

Note: The following Web site provides more information on logic models: *www.tadnet.org/model_and_performance*.

(b) A plan to implement the activities described in the *Project Activities* section of this priority;

(c) A plan, linked to the proposed project's logic model, for a formative evaluation of the proposed project's activities. The plan must describe how the formative evaluation will use clear performance objectives to ensure continuous improvement in the operation of the proposed project, including objective measures of progress in implementing the project and ensuring the quality of products and services;

(d) A budget for attendance at the following:

(1) The three-day Leadership Conference in Washington, DC during each year of the project period.

(2) The two-day Regional Technical Assistance for Parent Centers Conference, in the region in which the PTI is located, during each year of the project period. Applicants should refer to *www.parentcenternetwork.org* for a list of regions; and

(e) A description specifying the special efforts the PTI will make to:

(1) Ensure that the needs for training and information of underserved parents of children with disabilities in the area to be served, including parents of children attending high-poverty schools (as defined in footnote 1) and the State's persistently lowest-achieving schools (as defined in footnote 2), are effectively met; and

(2) Work with community-based organizations, including those that work with low-income parents and parents of limited English proficient children.

Project Activities. To meet the requirements of this priority, the PTI, at a minimum, must—

(a) Maintain a Web site that contains, at a minimum, a current calendar of upcoming events, free informational publications for families, and links to webinars or other online multimedia resources. The Web site must also meet government or industry-recognized standards for accessibility. Applicants can find more information regarding Web site accessibility at: *http://webaim.org;*

(b) Provide training and information that meets the training and information needs of parents of children with disabilities living in the area served by the PTI, particularly underserved parents and parents of children who may be inappropriately identified as having a disability and including parents of children attending high-poverty schools and the State's persistently lowest-achieving schools;

(c) Serve the parents of infants, toddlers, and children from ages birth through 26, with the full range of disabilities described in section 602(3) of IDEA;

(d) Ensure that the training and information provided meets the needs of low-income parents and parents of limited English proficient children;

(e) Assist parents to—

(1) Better understand the nature of their children's disabilities and their educational, developmental, and transitional needs;

(2) Communicate effectively and work collaboratively with personnel responsible for providing special education, early intervention services, transition services, and related services;

(3) Participate in decision-making processes, including those regarding participation in State and local assessments, and the development of individualized education programs under Part B of IDEA and individualized family service plans under Part C of IDEA;

(4) Obtain appropriate information about the range, type and quality of—

(i) Options, programs, services, technologies, practices, and interventions that are based on scientifically based research, to the extent practicable; and

(ii) Resources available to assist children with disabilities and their families in school and at home, including information available through OSEP's technical assistance and dissemination centers (*www.tadnet.org*) and through communities of practice (*www.tadnet.org/communities*);

(5) Understand the requirements of IDEA related to the provision of education and early intervention services to children with disabilities;

(6) Participate in activities at the school level that benefit their children; and

(7) Participate in school reform activities;

(f) In States where the State elects to contract with the PTIs, contract with the State educational agency (SEA) to provide, consistent with paragraphs (B) and (D) of section 615(e)(2) of IDEA, individuals to meet with parents and explain the mediation process;

(g) Assist parents in resolving disputes in the most expeditious and effective way possible, including encouraging the use of, and explaining the benefits of, alternative methods of dispute resolution such as the mediation process described in section 615(e) of IDEA;

(h) Assist parents and students with disabilities to understand their rights and responsibilities under IDEA, including those under section 615(m) of IDEA upon the student's reaching the age of majority (as appropriate under State law);

(i) Assist parents to understand the availability of, and how to effectively use, procedural safeguards provided under IDEA;

(j) Assist parents in understanding, preparing for, and participating in the resolution session described in section 615(f)(1)(B) of IDEA;

(k) Establish cooperative partnerships with any CPRCs and any other PTIs funded in the State under sections 672 and 671 of IDEA, respectively;

(l) Network with appropriate clearinghouses, including organizations conducting national dissemination activities under section 663 of IDEA and the Department's Institute of Education Sciences, and with other national, State, and local organizations and agencies such as protection and advocacy

---

eligible for, but does not receive, Title I funds that—(a) Is among the lowest-achieving five percent of secondary schools or the lowest-achieving five secondary schools in the State that are eligible for, but do not receive, Title I funds, whichever number of schools is greater; or (b) Is a high school that has had a graduation rate as defined in 34 CFR 200.19(b) that is less than 60 percent over a number of years.

To identify the persistently lowest-achieving schools, a State must take into account both—(i) The academic achievement of the ''all students'' group in a school in terms of proficiency on the State's assessments under section 1111(b)(3) of the ESEA in reading/language arts and mathematics combined; and (ii) The school's lack of progress on those assessments over a number of years in the ''all students'' group.

agencies that serve parents and families of children with the full range of disabilities described in section 602(3) of IDEA;

(m) Respond to requests from OSEP for information about the needs and experiences of parents served by the center to inform OSEP's analysis of State progress towards improving outcomes for children with disabilities;

(n) Annually report to the Department on—

(1) The number and demographics of parents to whom the PTI provided information and training in the most recently concluded fiscal year, including additional information regarding the parents' unique needs and the levels of service provided to them; and

(2) The effectiveness of strategies used to reach and serve parents, including underserved parents of children with disabilities such as parents of children attending high-poverty schools and the State's persistently lowest achieving schools, by providing evidence of how those parents were served effectively;

(o) Respond to requests from the OSEP-funded National and Regional PTACs and use the technical assistance services of the National and Regional PTACs in order to serve the families of infants, toddlers, and children with disabilities as efficiently as possible. Regional PTACs are charged with assisting parent centers with administrative and programmatic issues;

(p) In collaboration with OSEP and the National PTAC, participate in an annual collection of program data for the PTIs and CPRCs funded under sections 671 and 672 of IDEA, respectively; and

(q) Maintain ongoing communication with the OSEP Project Officer through phone conversations and email communication.

In addition, the PTI's board of directors must meet not less than once in each calendar quarter to review the activities for which the award was made and annually submit to the Secretary a written review of the PTI's activities conducted during the preceding fiscal year.

Waiver of Proposed Rulemaking: Under the Administrative Procedure Act (APA) (5 U.S.C. 553) the Department generally offers interested parties the opportunity to comment on proposed priorities and requirements. Section 681(d) of IDEA, however, makes the public comment requirements of the APA inapplicable to the priorities in this notice.

Program Authority: 20 U.S.C. 1471, 1472, and 1481.

Applicable Regulations: The Education Department General Administrative Regulations in 34 CFR parts 74, 75, 77, 79, 81, 82, 84, 85, 97, 98, and 99.

Note: The regulations in 34 CFR part 79 apply to all applicants except federally recognized Indian tribes.

II. Award Information

Type of Awards: Discretionary grants.

Estimated Available Funds: $11,094,041. Contingent upon the availability of funds and the quality of applications, we may make additional awards in FY 2013 from the list of unfunded applicants from the competitions.

Please refer to the ''Estimated Available Funds'' column of the table in this section for the estimated dollar amounts for individual competitions. Information concerning funding amounts for individual States and target populations for the 84.328M competition is provided in the ''Maximum Award'' column.

Estimated Average Size of Awards: See table.

Maximum Award: See table.

Estimated Number of Awards: See table.

Project Period: See table.

INDIVIDUALS WITH DISABILITIES EDUCATION ACT TRAINING AND INFORMATION FOR PARENTS OF CHILDREN WITH DISABILITIES PROGRAM APPLICATION NOTICE FOR FISCAL YEAR 2012

CFDA No. and name	Applications available	Deadline for transmittal of applications	Deadline for intergovernmental review	Estimated available funds $ (See Note 2)	Estimated average size of awards (See Note 2)	Maximum award $ (See Notes 1, 3, and 4)	Estimated number of awards (See Note 2)	Project period	Page limit	Contact person
84.328C Community Parent Resource Centers.	February 27, 2012	April 27, 2012	June 26, 2012	$1,100,000	$100,000	$100,000	11	Up to 48 mos.	50	Carmen Sanchez (202) 245–6595 PCP–4057
84.328M Parent Training and Information Centers (See Note 3).	February 27, 2012	April 27, 2012	June 26, 2012	9,994,041	354,901		27	Up to 36 mos. (See Note 3)	70	Lisa Gorove (202) 245–7357 PCP–4048
Arkansas						258,634				
California										
Region 1						791,336				
Region 2						648,741				
Region 3						220,881				
Region 4						577,426				
Region 5						220,881				
Connecticut						276,016				
Georgia						664,791				
Illinois										
Region 1						548,612				
Region 2						281,878				
Kansas						292,033				
Michigan										
Region 1						239,170				
Region 2						403,970				
Montana						227,965				
Nebraska						224,894				
New Jersey						496,829				
New Mexico						277,918				
Ohio										
Region 1						241,824				
Region 2						468,392				
Oregon						283,548				
South Carolina						289,373				
Texas										
Region 1						667,779				
Region 2						667,779				
Region 3						377,223				
Utah						246,148				
Outlying Areas										
American Samoa						50,000				
Commonwealth of the Northern Marianas.						50,000				

Note 1: We will reject any application that proposes a budget exceeding the maximum award for a single budget period of 12 months. The Assistant Secretary for Special Education and Rehabilitative Services may change the maximum amount through a notice published in the **Federal Register**.

Note 2: The Department is not bound by any estimates in this notice.

Note 3: For the *Parent Training and Information Centers,* CFDA Number 84.328M competition:

Project Period: In order to allocate resources equitably, create a unified system of service delivery, and provide the broadest coverage for the parents and families in every State, the Department is making awards to PTIs in three-year cycles for each State. In FY 2012, applications for three-year awards will be accepted for the following States and outlying areas: American Samoa, Arkansas, California, Commonwealth of the Northern Mariana Islands, Connecticut, Georgia, Illinois, Kansas, Michigan, Montana, Nebraska, New Jersey, New Mexico, Ohio, Oregon, South Carolina, Texas, and Utah. These projects will be funded for a period up to 36 months.

Estimated Project Awards: Project award amounts are for a single budget period of 12 months. To ensure maximum coverage for this competition, the Department has established regional service areas within California, Illinois, Michigan, Ohio, and Texas and has identified corresponding maximum award amounts for each region. Applicants for these States must submit a separate application for each of the regions they propose to serve.

The Department took into consideration current funding levels, population distribution, poverty rates, and low-density enrollment when determining the award amounts for grants under this competition. In the following States, one award may be made for up to the amounts listed in the table to a qualified applicant for a PTI Center to serve the entire State.

Arkansas: $258,634.
Connecticut: $276,16.
Georgia: $664,791.
Kansas: $292,033.
Montana: $227,965.
Nebraska: $224,894.
New Jersey: $496,829.
New Mexico: $277,918.
Oregon: $283,548.
South Carolina: $289,373.
Utah: $246,148.

In California one award up to the amount listed will be made to a qualified applicant for a PTI Center to serve each identified region. A list of the counties that are included in each region follows.

Region 1 (Los Angeles, Santa Barbara, San Luis Obispo, Ventura): $791,336.

Region 2 (Imperial, Inyo, Mono, Orange, Riverside, San Bernardino, San Diego): $648,741.

Region 3 (Fresno, Kern, Kings, Madera, Mariposa, Merced, Monterey, Stanislaus, San Benito, Tulare): $220,881.

Region 4 (Alameda, Contra Costa, Marin, Napa, Santa Clara, Santa Cruz, San Francisco, San Joaquin, San Mateo, Solano, Sonoma, Yolo): 577,426.

Region 5 (Alpine, Amador, Butte, Calaveras, Colusa, Del Norte, El Dorado, Glenn, Humboldt, Lake, Lassen, Mendocino, Modoc, Nevada, Placer, Plumas, Sacramento, Shasta, Sierra, Siskiyou, Sutter, Tehama, Trinity, Tuolumne, Yuba): $220,881.

In Illinois, one award up to the amount listed will be made to a qualified applicant for a PTI Center to serve each identified region. A list of the counties that are included in each region follows.

Region 1 (Cook, DuPage, Grundy, Kane, Kendall, Lake, McHenry, Will): $548,612.

Region 2 (includes the remainder of the State): $281,878.

In Michigan, one award up to the amount listed will be made to a qualified applicant for a PTI Center to serve each identified region. A list of the counties that are included in each region follows.

Region 1 (Oakland, Macomb, Wayne): $239,170.

Region 2 (includes the remainder of the State): $403,970.

In Ohio one award will be made to a qualified applicant for a PTI Center to serve each identified region. A list of the counties that are included in each region follows.

Region 1 (Adams, Brown, Butler, Champaign, Clark, Clermont, Clinton, Darke, Fayette, Greene, Hamilton, Highland, Jackson, Lawrence, Logan, Miami, Montgomery, Pike, Preble, Ross, Scioto, Shelby, Warren): $241,824.

Region 2 (includes the remainder of the State): $468,392.

In Texas, one award up to the amount listed will be made to a qualified applicant for a PTI Center to serve each identified region. A list of the counties that are included in each region follows.

Region 1 (Anderson, Angelina, Archer, Austin, Bastrop, Baylor, Bell, Blanco, Bosque, Bowie, Brazos, Burleson, Burnet, Caldwell, Camp, Casa, Cass, Cherokee, Clay, Collin, Comal, Cooke, Coryell, Dallas, Delta, Denton, Ellis, Erath, Falls, Fannin, Fayette, Foard, Franklin, Freestone, Gillespie, Gonzales, Grayson, Gregg, Grimes, Guadalupe, Hamilton, Hardeman, Hardin, Harrison, Hays, Henderson, Hill, Hood, Hopkins, Houston, Hunt, Jack, Jasper, Jefferson, Johnson, Kaufman, Kendall, Knox, Marion, Madison, McLennan, Lamar, Lampass, Leon, Limestone, Llano, Lee, Madison, Marion, Milam, Mills, Montague, Montgomery, Morris, Nacogdoches, Navarro, Newton, Orange, Palo Pinto, Panola, Parker, Polk, Rains, Red River, Rockwall, Robertson, Rusk, Tarrant, Titus, Travis, Trinity, San Jacinto, Smith, Upshur, Shelby, San Augustine, Sabine, Smith, Somervell, Throckmorton, Tyler, Van Zandt, Walker, Washington, Wilbarger, Williamson, Wichita, Wise, Wood, Young): $667,779.

Region 2 (Aransas, Atascosa, Bandera, Bee, Bexar, Brooks, Calhoun, Cameron, Chambers, Colorado, DeWitt, Dimmit, Duval, Frio, Galveston, Goliad, Hidalgo, Jim Hogg, Jim Wells, Karnes, Kenedy, Kerr, Kinney, Kleberg, La Salle, Lavaca, Liberty, Live Oak, Maverick, McMullen, Medina, Nueces, Real, San Patricio, Starr, Uvalde, Webb, Willacy, Wilson, Zapata, Zavala): $667,779.

Region 3 (Andrews, Armstrong, Bailey, Borden, Brewster, Briscoe, Brown, Callahan, Carson, Castro, Childress, Cochran, Coke, Coleman, Collingsworth, Concho, Cottle, Crane, Crockett, Crosby, Culberson, Dallam, Dawson, Deaf Smith, Dickens, Donley, Eastland, Ector, Edwards, El Paso, Fisher, Floyd, Gaines, Garza, Glasscock, Gray, Hale, Hall, Hansford, Hartley, Haskell, Hemphill, Hockley, Howard, Hudspeth, Hutchinson, Irion, Jeff Davis, Jones, Kent, Kimble, King, Lamb, Lipscomb, Loving, Lubbock, Lynn, Martin, Mason, McCulloch, Menard, Midland, Mitchell, Moore, Motley, Nolan, Ochiltree, Oldham, Parmer, Pecos, Potter, Presidio, Randall, Reagan, Reeves, Roberts, Runnels, San Saba, Schleicher, Scurry, Shackelford, Sherman, Stephens, Sterling, Stonewall, Sutton, Swisher, Taylor, Terrell, Terry, Tom Green, Upton, Val Verde, Ward, Wheeler, Winkler, Yoakum): $377,223.

One award up to the amount listed may be made to a qualified applicant for a PTI center to serve the outlying areas as follows:

American Samoa: $50,000.
Commonwealth of the Northern Mariana Islands: $50,000.

Note 4: Consistent with 34 CFR 75.104(b), we will reject any application that proposes a project funding level for any year that exceeds the stated maximum award amount for that year.

III. Eligibility Information

1. *Eligible Applicants:*

Absolute priority	Eligible applicants
1. Community Parent Resource Centers (84.328C)	Local parent organizations.
2. Parent Training and Information Centers (84.328M)	Parent organizations.

Note: Under section 672(a)(2) of IDEA, a ''local parent organization'' is a parent organization (as that term is defined in section 671(a)(2) of IDEA) that—

(a) Has a board of directors, the majority of whom are parents of children with disabilities ages birth through 26 from the community to be served.

(b) Has as its mission serving parents of children with disabilities from that

community who (1) are ages birth through 26, and (2) have the full range of disabilities as defined in section 602(3) of IDEA.

Section 671(a)(2) of IDEA defines a ''parent organization'' as a private nonprofit organization (other than an institution of higher education) that—

(a) Has a board of directors—

(1) The majority of whom are parents of children with disabilities ages birth through 26;

(2) That includes—

(i) Individuals working in the fields of special education, related services, and early intervention;

(ii) Individuals with disabilities; and

(3) The parent and professional members of which are broadly representative of the population to be served, including low-income parents and parents of limited English proficient children; and

(b) Has as its mission serving families of children with disabilities who are ages birth through 26, and have the full range of disabilities described in section 602(3) of IDEA.

2. *Cost Sharing or Matching:* This program does not require cost sharing or matching.

3. *Other: General Requirements*—(a) The projects funded under this program must make positive efforts to employ and advance in employment qualified individuals with disabilities (see section 606 of IDEA).

(b) Applicants and grant recipients funded under this program must involve individuals with disabilities or parents of individuals with disabilities ages birth through 26 in planning, implementing, and evaluating the projects (see section 682(a)(1)(A) of IDEA).

IV. Application and Submission Information

1. *Address to Request Application Package:* You can obtain an application package via the Internet, from the Education Publications Center (ED Pubs), or from the program office.

To obtain a copy via the Internet, use the following address: *www.ed.gov/fund/grant/apply/grantapps/index.html.* To obtain a copy from ED Pubs, write, fax, or call the following: ED Pubs, U.S. Department of Education, P.O. Box 22207, Alexandria, VA 22304. Telephone, toll free: 1–877–433–7827. Fax: (703) 605–6794. If you use a telecommunications device for the deaf (TDD) or a text telephone (TTY), call, toll free: 1–877–576–7734.

You can contact ED Pubs at its Web site, also: *www.EDPubs.gov* or at its email address: *edpubs@inet.ed.gov.*

If you request an application package from ED Pubs, be sure to identify the competition to which you want to apply, as follows: CFDA Number 84.328C or 84.328M.

To obtain a copy from the program office, contact one of the persons listed in the chart under section II. *Award Information* of this notice.

Individuals with disabilities can obtain a copy of the application package in an accessible format (e.g., braille, large print, audiotape, or compact disc) by contacting the person or team listed under *Accessible Format* in section VIII of this notice.

2. *Content and Form of Application Submission:* Requirements concerning the content of an application, together with the forms you must submit, are in the application package for each competition.

Page Limit: The application narrative (Part III of the application) is where you, the applicant, address the selection criteria that reviewers use to evaluate your application. You must limit Part III to the equivalent of no more than the number of pages listed under ''Page Limit'' for that competition in the chart under II. *Award Information,* using the following standards:

- A ''page'' is 8.5″ × 11″, on one side only, with 1″ margins at the top, bottom, and both sides.
- Double space (no more than three lines per vertical inch) all text in the application narrative, including titles, headings, footnotes, quotations, references, and captions.
- Use a font that is either 12 point or larger or no smaller than 10 pitch (characters per inch).
- Use one of the following fonts: Times New Roman, Courier, Courier New, or Arial. An application submitted in any other font (including Times Roman or Arial Narrow) will not be accepted.

The page limit does not apply to Part I, the cover sheet; Part II, the budget section, including the narrative budget justification; Part IV, the assurances and certifications; or the one-page abstract, the resumes, the bibliography, the references, or the letters of support. However, the page limit does apply to all of the application narrative section (Part III).

We will reject your application if you exceed the page limit; or if you apply other standards and exceed the equivalent of the page limit.

3. *Submission Dates and Times:*

Applications Available: See table in Section II, *Award Information.*

Deadline for Transmittal of Applications: See table in Section II, *Award Information.*

Applications for grants under each competition may be submitted electronically using the *Grants.gov* Apply site (*Grants.gov*), or in paper format by mail or hand delivery. For information (including dates and times) about how to submit your application electronically, or in paper format by mail or hand delivery, please refer to section IV. 7. *Other Submission Requirements* of this notice.

We do not consider an application that does not comply with the deadline requirements.

Individuals with disabilities who need an accommodation or auxiliary aid in connection with the application process should contact the person listed under **FOR FURTHER INFORMATION CONTACT** in section VII of this notice. If the Department provides an accommodation or auxiliary aid to an individual with a disability in connection with the application process, the individual's application remains subject to all other requirements and limitations in this notice.

Deadline for Intergovernmental Review: See chart.

4. *Intergovernmental Review:* This program is subject to Executive Order 12372 and the regulations in 34 CFR part 79. Information about Intergovernmental Review of Federal Programs under Executive Order 12372 is in the application package for each competition.

5. *Funding Restrictions:* We reference regulations outlining funding restrictions in the *Applicable Regulations* section of this notice.

6. *Data Universal Numbering System Number, Taxpayer Identification Number, and Central Contractor Registry:* To do business with the Department of Education, you must—

a. Have a Data Universal Numbering System (DUNS) number and a Taxpayer Identification Number (TIN);

b. Register both your DUNS number and TIN with the Central Contractor Registry (CCR), the Government's primary registrant database;

c. Provide your DUNS number and TIN on your application; and

d. Maintain an active CCR registration with current information while your application is under review by the Department and, if you are awarded a grant, during the project period.

You can obtain a DUNS number from Dun and Bradstreet. A DUNS number can be created within one business day.

If you are a corporate entity, agency, institution, or organization, you can obtain a TIN from the Internal Revenue Service. If you are an individual, you can obtain a TIN from the Internal Revenue Service or the Social Security Administration. If you need a new TIN,

please allow 2–5 weeks for your TIN to become active.

The CCR registration process may take five or more business days to complete. If you are currently registered with the CCR, you may not need to make any changes. However, please make certain that the TIN associated with your DUNS number is correct. Also note that you will need to update your CCR registration on an annual basis. This may take three or more business days to complete.

In addition, if you are submitting your application via Grants.gov, you must (1) be designated by your organization as an Authorized Organization Representative (AOR); and (2) register yourself with Grants.gov as an AOR. Details on these steps are outlined at the following Grants.gov Web page: *www.grants.gov/applicants/get_registered.jsp*.

7. *Other Submission Requirements:* Applications for grants under each competition announced in this notice may be submitted electronically or in paper format by mail or hand delivery.

a. *Electronic Submission of Applications.*

We are participating as a partner in the Governmentwide Grants.gov Apply site. The Training and Information for Parents of Children with Disabilities Program competitions, CFDA numbers 84.328C and 84.328M, are included in this project. We request your participation in Grants.gov.

If you choose to submit your application electronically, you must use the Governmentwide Grants.gov Apply site at *www.Grants.gov*. Through this site, you will be able to download a copy of the application package, complete it offline, and then upload and submit your application. You may not email an electronic copy of a grant application to us.

You may access the electronic grant application for the Training and Information for Parents of Children with Disabilities Program competitions, CFDA numbers 84.328C and 84.328M at *www.Grants.gov*. You must search for the downloadable application package for this program by the CFDA number. Do not include the CFDA number's alpha suffix in your search (e.g., search for 84.328, not 84.328M).

Please note the following:

- Your participation in Grants.gov is voluntary.
- When you enter the Grants.gov site, you will find information about submitting an application electronically through the site, as well as the hours of operation.
- Applications received by Grants.gov are date and time stamped. Your application must be fully uploaded and submitted and must be date and time stamped by the Grants.gov system no later than 4:30 p.m., Washington, DC time, on the application deadline date. Except as otherwise noted in this section, we will not accept your application if it is received—that is, date and time stamped by the Grants.gov system—after 4:30 p.m., Washington, DC time, on the application deadline date. We do not consider an application that does not comply with the deadline requirements. When we retrieve your application from Grants.gov, we will notify you if we are rejecting your application because it was date and time stamped by the Grants.gov system after 4:30 p.m., Washington, DC time, on the application deadline date.
- The amount of time it can take to upload an application will vary depending on a variety of factors, including the size of the application and the speed of your Internet connection. Therefore, we strongly recommend that you do not wait until the application deadline date to begin the submission process through Grants.gov.
- You should review and follow the Education Submission Procedures for submitting an application through Grants.gov that are included in the application package for this program to ensure that you submit your application in a timely manner to the Grants.gov system. You can also find the Education Submission Procedures pertaining to Grants.gov under News and Events on the Department's G5 system home page at *www.G5.gov*.
- You will not receive additional point value because you submit your application in electronic format, nor will we penalize you if you submit your application in paper format.
- If you submit your application electronically, you must submit all documents electronically, including all information you typically provide on the following forms: the Application for Federal Assistance (SF 424), the Department of Education Supplemental Information for SF 424, Budget Information—Non-Construction Programs (ED 524), and all necessary assurances and certifications.
- If you submit your application electronically, you must upload any narrative sections and all other attachments to your application as files in a .PDF (Portable Document) read-only, non-modifiable format. Do not upload an interactive or fillable .PDF file. If you upload a file type other than a read-only, non-modifiable .PDF or submit a password-protected file, we will not review that material. Additional, detailed information on how to attach files is in the application instructions.
- Your electronic application must comply with any page-limit requirements described in this notice.
- After you electronically submit your application, you will receive from Grants.gov an automatic notification of receipt that contains a Grants.gov tracking number. (This notification indicates receipt by Grants.gov only, not receipt by the Department.) The Department then will retrieve your application from Grants.gov and send a second notification to you by email. This second notification indicates that the Department has received your application and has assigned your application a PR/Award number (an ED-specified identifying number unique to your application).
- We may request that you provide us original signatures on forms at a later date.

Application Deadline Date Extension in Case of Technical Issues with the Grants.gov System: If you are experiencing problems submitting your application through Grants.gov, please contact the Grants.gov Support Desk, toll free, at 1–800–518–4726. You must obtain a Grants.gov Support Desk Case Number and must keep a record of it.

If you are prevented from electronically submitting your application on the application deadline date because of technical problems with the Grants.gov system, we will grant you an extension until 4:30 p.m., Washington, DC time, the following business day to enable you to transmit your application electronically or by hand delivery. You also may mail your application by following the mailing instructions described elsewhere in this notice.

If you submit an application after 4:30 p.m., Washington, DC time, on the application deadline date, please contact the person listed under **FOR FURTHER INFORMATION CONTACT** in section VII of this notice and provide an explanation of the technical problem you experienced with Grants.gov, along with the Grants.gov Support Desk Case Number. We will accept your application if we can confirm that a technical problem occurred with the Grants.gov system and that that problem affected your ability to submit your application by 4:30 p.m., Washington, DC time, on the application deadline date. The Department will contact you after a determination is made on whether your application will be accepted.

Note: The extensions to which we refer in this section apply only to the unavailability of, or technical problems

with, the Grants.gov system. We will not grant you an extension if you failed to fully register to submit your application to Grants.gov before the application deadline date and time or if the technical problem you experienced is unrelated to the Grants.gov system.

b. *Submission of Paper Applications by Mail.*

If you submit your application in paper format by mail (through the U.S. Postal Service or a commercial carrier), you must mail the original and two copies of your application, on or before the application deadline date, to the Department at the following address:

U.S. Department of Education,
Application Control Center,
Attention: (CFDA Number 84.328C or 84.328M), LBJ Basement Level 1, 400 Maryland Avenue SW., Washington, DC 20202–4260.

You must show proof of mailing consisting of one of the following:

(1) A legibly dated U.S. Postal Service postmark.

(2) A legible mail receipt with the date of mailing stamped by the U.S. Postal Service.

(3) A dated shipping label, invoice, or receipt from a commercial carrier.

(4) Any other proof of mailing acceptable to the Secretary of the U.S. Department of Education.

If you mail your application through the U.S. Postal Service, we do not accept either of the following as proof of mailing:

(1) A private metered postmark.

(2) A mail receipt that is not dated by the U.S. Postal Service.

If your application is postmarked after the application deadline date, we will not consider your application.

Note: The U.S. Postal Service does not uniformly provide a dated postmark. Before relying on this method, you should check with your local post office.

c. *Submission of Paper Applications by Hand Delivery.*

If you submit your application in paper format by hand delivery, you (or a courier service) must deliver the original and two copies of your application by hand, on or before the application deadline date, to the Department at the following address:

U.S. Department of Education,
Application Control Center,
Attention: (CFDA Number 84.328C or 84.328M), 550 12th Street, SW., Room 7041, Potomac Center Plaza, Washington, DC 20202–4260.

The Application Control Center accepts hand deliveries daily between 8 a.m. and 4:30 p.m., Washington, DC time, except Saturdays, Sundays, and Federal holidays.

Note for Mail or Hand Delivery of Paper Applications: If you mail or hand deliver your application to the Department—

(1) You must indicate on the envelope and—if not provided by the Department—in Item 11 of the SF 424 the CFDA number, including suffix letter, if any, of the competition under which you are submitting your application; and

(2) The Application Control Center will mail to you a notification of receipt of your grant application. If you do not receive this notification within 15 business days from the application deadline date, you should call the U.S. Department of Education Application Control Center at (202) 245–6288.

V. Application Review Information

1. *Selection Criteria:* The selection criteria for this program are from 34 CFR 75.210 and are listed in the application package.

2. *Review and Selection Process:* We remind potential applicants that in reviewing applications in any discretionary grant competition, the Secretary may consider, under 34 CFR 75.217(d)(3), the past performance of the applicant in carrying out a previous award, such as the applicant's use of funds, achievement of project objectives, and compliance with grant conditions. The Secretary may also consider whether the applicant failed to submit a timely performance report or submitted a report of unacceptable quality.

In addition, in making a competitive grant award, the Secretary also requires various assurances including those applicable to Federal civil rights laws that prohibit discrimination in programs or activities receiving Federal financial assistance from the Department of Education (34 CFR 100.4, 104.5, 106.4, 108.8, and 110.23).

3. *Additional Review and Selection Process Factors:* In the past, the Department has had difficulty finding peer reviewers for certain competitions because so many individuals who are eligible to serve as peer reviewers have conflicts of interest. The Standing Panel requirements under IDEA also have placed additional constraints on the availability of reviewers. Therefore, the Department has determined that, for some discretionary grant competitions, applications may be separated into two or more groups and ranked and selected for funding within specific groups. This procedure will make it easier for the Department to find peer reviewers, by ensuring that greater numbers of individuals who are eligible to serve as reviewers for any particular group of applicants will not have conflicts of interest. It also will increase the quality, independence, and fairness of the review process, while permitting panel members to review applications under discretionary grant competitions for which they also have submitted applications. However, if the Department decides to select an equal number of applications in each group for funding, this may result in different cut-off points for fundable applications in each group.

4. *Special Conditions:* Under 34 CFR 74.14 and 80.12, the Secretary may impose special conditions on a grant if the applicant or grantee is not financially stable; has a history of unsatisfactory performance; has a financial or other management system that does not meet the standards in 34 CFR parts 74 or 80, as applicable; has not fulfilled the conditions of a prior grant; or is otherwise not responsible.

VI. Award Administration Information

1. *Award Notices:* If your application is successful, we notify your U.S. Representative and U.S. Senators and send you a Grant Award Notification (GAN). We may notify you informally, also.

If your application is not evaluated or not selected for funding, we notify you.

2. *Administrative and National Policy Requirements:* We identify administrative and national policy requirements in the application package and reference these and other requirements in the *Applicable Regulations* section of this notice.

We reference the regulations outlining the terms and conditions of an award in the *Applicable Regulations* section of this notice and include these and other specific conditions in the GAN. The GAN also incorporates your approved application as part of your binding commitments under the grant.

3. *Reporting:* (a) If you apply for a grant under this competition, you must ensure that you have in place the necessary processes and systems to comply with the reporting requirements in 2 CFR part 170 should you receive funding under the competition. This does not apply if you have an exception under 2 CFR 170.110(b).

(b) At the end of your project period, you must submit a final performance report, including financial information, as directed by the Secretary. If you receive a multi-year award, you must submit an annual performance report that provides the most current performance and financial expenditure information as directed by the Secretary under 34 CFR 75.118. The Secretary may also require more frequent

performance reports under 34 CFR 75.720(c). For specific requirements on reporting, please go to *www.ed.gov/fund/grant/apply/appforms/appforms.html.*

4. *Performance Measures:* Under the Government Performance and Results Act of 1993, the Department has established a set of performance measures, including long-term measures, that are designed to yield information on various aspects of the effectiveness and quality of the Training and Information for Parents of Children with Disabilities program. The measures focus on the extent to which projects provide high-quality materials, the relevance of project products and services to educational and early intervention policy and practice, and the usefulness of products and services to improve educational and early intervention policy and practice.

Grantees will be required to provide information related to these measures in annual reports submitted to the Department.

Grantees also will be required to report information on their projects' performance in annual reports to the Department (34 CFR 75.590).

5. *Continuation Awards:* In making a continuation award, the Secretary may consider, under 34 CFR 75.253, the extent to which a grantee has made ''substantial progress toward meeting the objectives in its approved application.'' This consideration includes the review of a grantee's progress in meeting the targets and projected outcomes in its approved application, and whether the grantee has expended funds in a manner that is consistent with its approved application and budget. In making a continuation award, the Secretary also considers whether the grantee is operating in compliance with the assurances in its approved application, including those applicable to Federal civil rights laws that prohibit discrimination in programs or activities receiving Federal financial assistance from the Department (34 CFR 100.4, 104.5, 106.4, 108.8, and 110.23).

VII. Agency Contact

FOR FURTHER INFORMATION CONTACT: See the chart under section II. *Award Information* of this notice for the name, room number, and telephone number of the contact person for each competition. You can write to the contact person at the following address: U.S. Department of Education, 400 Maryland Avenue SW., Potomac Center Plaza (PCP), Washington, DC 20202–2550.

If you use a TDD or a TTY, call the Federal Relay Service (FRS), toll free, at 1–800–877–8339.

VIII. Other Information

Accessible Format: Individuals with disabilities can obtain this document and a copy of the application package in an accessible format (e.g., braille, large print, audiotape, or computer disc) by contacting the Grants and Contracts Services Team, U.S. Department of Education, 400 Maryland Avenue SW., room 5075, PCP, Washington, DC 20202–2550. Telephone: (202) 245–7363. If you use a TDD or a TTY, call the FRS, toll free, at 1–800–877–8339.

Electronic Access to This Document: The official version of this document is the document published in the **Federal Register**. Free Internet access to the official edition of the **Federal Register** and the Code of Federal Regulations is available via the Federal Digital System at: *www.gpo.gov/fdsys.* At this site you can view this document, as well as all other documents of this Department published in the **Federal Register**, in text or Adobe Portable Document Format (PDF). To use PDF you must have Adobe Acrobat Reader, which is available free at the site.

You may also access documents of the Department published in the **Federal Register** by using the article search feature at: *www.federalregister.gov.* Specifically, through the advanced search feature at this site, you can limit your search to documents published by the Department.

Dated: February 21, 2012.

Alexa Posny,

Assistant Secretary for Special Education and Rehabilitative Services.

[FR Doc. 2012–4551 Filed 2–24–12; 8:45 am]

BILLING CODE 4000–01–P

DEPARTMENT OF EDUCATION

National Advisory Council on Indian Education (NACIE)

AGENCY: U.S. Department of Education.

ACTION: Notice of an open teleconference meeting.

SUMMARY: This notice sets forth the schedule and proposed agenda of an upcoming teleconference meeting of the National Advisory Council on Indian Education (the Council) and is intended to notify the general public of the meeting. This notice also describes the functions of the Council. Notice of the Council's meetings is required under Section 10(a)(2) of the Federal Advisory Committee Act.

Date and time: March 12, 2012—1 p.m.–5 p.m. Eastern Daylight Time.

Location: The meeting will be conducted via conference call with NACIE members. Up to 20 dial-in, listen-only phone lines will be made available to the public on a first come, first serve basis. The conference call number is 1.800.871.9060 and the participant code is 929296858#.

The public is also invited to attend the conference call meeting at the U.S. Department of Education, 400 Maryland Street SW., Room 1W105/108, Washington, DC 20202–6400. Members of the public should report to the security desk and a form of federal I.D. will be required for security clearance and escorted access to the meeting room.

SUPPLEMENTARY INFORMATION: The National Advisory Council on Indian Education is authorized by Section 7141 of the Elementary and Secondary Education Act. The Council is established within the Department of Education to advise the Secretary of Education on the funding and administration (including the development of regulations, and administrative policies and practices) of any program over which the Secretary has jurisdiction and includes Indian children or adults as participants or programs that may benefit Indian children or adults, including any program established under Title VII, Part A of the Elementary and Secondary Education Act. The Council submits to the Congress, not later than June 30 of each year, a report on the activities of the Council that includes recommendations the Council considers appropriate for the improvement of Federal education programs that include Indian children or adults as participants or that may benefit Indian children or adults, and recommendations concerning the funding of any such program. One of the Council's responsibilities is to develop and provide recommendations to the Secretary of Education on the funding and administration (including the development of regulations, and administrative policies and practices) of any program over which the Secretary has jurisdiction that can benefit Indian children or adults participating in any program which could benefit Indian children. The Council is convening this public meeting to review, advise, and discuss the following items: (1) Recommendations to the Secretary of Education concerning the funding and administration (including the development of regulations and administrative policies and practices) of programs; (2) review the Executive Order 13592 establishing the White House Initiative on American Indian and Alaska Native Education (Initiative); (3) provide input on the

draft Memorandum of Understanding between the Department of Education and the Department of the Interior to improve American Indian/Alaska Native education that will take advantage of both Departments' expertise, resources, and facilities, as mandated in the Executive Order; (4) receive an overview of the new State-Tribal Education Partnership Pilot grant program; and (5) discuss and plan for the development of the annual report to Congress.

FOR FURTHER INFORMATION CONTACT: Jenelle Leonard, Designated Federal Official, Office of Elementary and Secondary Education, U.S. Department of Education, 400 Maryland Avenue SW., Washington, DC 20202. Telephone: 202–205–2161. Fax: 202–205–5870.

The meeting site is accessible to individuals with disabilities. If you will need an auxiliary aid or service to participate in the meeting (e.g., interpreting service, assistive listening device, or materials in an alternate format), notify the contact person listed in this notice by March 5, 2012. There will not be an opportunity for public comment during this meeting; however, members of the public are encouraged to submit written comments via email to *TribalConsultation@ed.gov.*

A report of the meeting activities and related matters that are informative to the public and consistent with the policy of section 5 U.S.C. 552b(c) will be available to the public within 21 days of the meeting. Records are kept of all Council proceedings and are available for public inspection at the at the Office of Indian Education, United States Department of Education, 400 Maryland Avenue SW., Washington, DC 20202. Monday–Friday, 8:30 a.m.–5 p.m. Eastern Daylight Time.

Electronic Access to This Document: You may view this document, as well as all other documents of this Department published in the **Federal Register**, in text or Adobe Portable Document Format (PDF) on the Internet at the following site: *www.ed.gov/news/fedregister/index.html.*

To use PDF you must have Adobe Acrobat Reader, which is available free at this site. If you have questions about using PDF, call the U.S. Government Printing Office (GPO), toll free at 1–866–512–1830; or in the Washington, DC, area at (202) 512–0000.

Note: The official version of this document is the document published in the **Federal Register**. Free Internet access to the official edition of the **Federal Register** and the Code of Federal Regulations is available on GPO Access at: *www.gpoaccess.gov/nara/index.html.*

Michael Yudin,

Acting Assistant Secretary, Office of Elementary and Secondary Education.

[FR Doc. 2012–4503 Filed 2–24–12; 8:45 am]

BILLING CODE 4000–01–P

DEPARTMENT OF ENERGY

[OE Docket No. EA–383]

Application To Export Electric Energy; Pilot Power Group, Inc.

AGENCY: Office of Electricity Delivery and Energy Reliability, DOE.

ACTION: Notice of application.

SUMMARY: Pilot Power Group, Inc. (Pilot Power) has applied for authority to transmit electric energy from the United States to Mexico pursuant to section 202(e) of the Federal Power Act (FPA).

DATES: Comments, protests, or motions to intervene must be submitted on or before March 28, 2012.

ADDRESSES: Comments, protests, or motions to intervene should be addressed to: Christopher Lawrence, Office of Electricity Delivery and Energy Reliability, Mail Code: OE–20, U.S. Department of Energy, 1000 Independence Avenue SW., Washington, DC 20585. Because of delays in handling conventional mail, it is recommended that documents be transmitted by overnight mail, by electronic mail to *Christopher.Lawrence@hq.doe.gov,* or by facsimile to 202–586–8008.

FOR FURTHER INFORMATION CONTACT: Christopher Lawrence (Program Office) at 202–586–5260, or by email to *Christopher.Lawrence@hq.doe.gov.*

SUPPLEMENTARY INFORMATION: Exports of electricity from the United States to a foreign country are regulated by the Department of Energy (DOE) pursuant to sections 301(b) and 402(f) of the Department of Energy Organization Act (42 U.S.C. 7151(b), 7172(f)) and require authorization under section 202(e) of the FPA (16 U.S.C. 824a(e)).

On January 12, 2012, DOE received an application from Pilot Power for authority to transmit electric energy from the United States to Mexico for five years as a power marketer using existing international transmission facilities. Pilot Power does not own any electric transmission facilities nor does it hold a franchised service area.

The electric energy that Pilot Power proposes to export to Mexico would be surplus energy purchased from electric utilities, Federal power marketing agencies, and other entities within the United States. The existing international transmission facilities to be utilized by Pilot Power have previously been authorized by Presidential permits issued pursuant to Executive Order 10485, as amended, and are appropriate for open access transmission by third parties.

Procedural Matters: Any person desiring to be heard in this proceeding should file a comment or protest to the application at the address provided above. Protests should be filed in accordance with Rule 211 of the Federal Energy Regulatory Commission's (FERC) Rules of Practice and Procedures (18 CFR 385.211). Any person desiring to become a party to these proceedings should file a motion to intervene at the above address in accordance with FERC Rule 214 (385.214). Five copies of such comments, protests, or motions to intervene should be sent to the address provided above on or before the date listed above.

Comments on the Pilot Power application to export electric energy to Mexico should be clearly marked with OE Docket No. 383. An additional copy is to be filed directly with Thomas E. Darton, Pilot Power Group, Inc., 8910 University Center Lane, Suite 520, *tdarton@pilotpowergroup.com.*

A final decision will be made on this application after the environmental impacts have been evaluated pursuant to DOE's National Environmental Policy Act Implementing Procedures (10 CFR part 1021) and after a determination is made by DOE that the proposed action will not have an adverse impact on the reliability of the U.S. electric power supply system.

Copies of this application will be made available, upon request, for public inspection and copying at the address provided above, by accessing the program Web site at *http://energy.gov/node/11845* or by emailing Angela Troy at *Angela.Troy@hq.doe.gov.*

Issued in Washington, DC, on February 20, 2012.

Brian Mills,

Director, Permitting and Siting, Office of Electricity Delivery and Energy Reliability.

[FR Doc. 2012–4462 Filed 2–24–12; 8:45 am]

BILLING CODE 6450–01–P

DEPARTMENT OF ENERGY

[OE Docket No. EA–384]

Application to Export Electric Energy; NRG Power Marketing LLC

AGENCY: Office of Electricity Delivery and Energy Reliability, DOE.

ACTION: Notice of application.

SUMMARY: NRG Power Marketing LLC (NRGPML) has applied for authority to transmit electric energy from the United States to Mexico pursuant to section 202(e) of the Federal Power Act (FPA).

DATES: Comments, protests, or motions to intervene must be submitted on or before March 28, 2012.

ADDRESSES: Comments, protests, or motions to intervene should be addressed to: Christopher Lawrence, Office of Electricity Delivery and Energy Reliability, Mail Code: OE–20, U.S. Department of Energy, 1000 Independence Avenue SW., Washington, DC 20585. Because of delays in handling conventional mail, it is recommended that documents be transmitted by overnight mail, by electronic mail to *Christopher.Lawrence@hq.doe.gov,* or by facsimile to 202–586–8008.

FOR FURTHER INFORMATION CONTACT: Christopher Lawrence (Program Office) at 202–586–5260, or by email to *Christopher.Lawrence@hq.doe.gov*

SUPPLEMENTARY INFORMATION: Exports of electricity from the United States to a foreign country are regulated by the Department of Energy (DOE) pursuant to sections 301(b) and 402(f) of the Department of Energy Organization Act (42 U.S.C. 7151(b), 7172(f)) and require authorization under section 202(e) of the FPA (16 U.S.C. 824a(e)).

On January 23, 2012, DOE received an application from NRGPML for authority to transmit electric energy from the United States to Mexico for five years as a power marketer using existing international transmission facilities. NRGPML does not own any electric transmission facilities nor does it hold a franchised service area. NRGPML states that it will make all of the necessary commercial arrangements and will obtain any and all of the required regulatory approvals to affect the export of electricity to Mexico as requested.

The electric energy that NRGPML proposes to export to Mexico would be surplus energy purchased from electric utilities and Federal power marketing agencies within the United States. The existing international transmission facilities to be utilized by NRGPML have previously been authorized by Presidential permits issued pursuant to Executive Order 10485, as amended, and are appropriate for open access transmission by third parties.

Procedural Matters: Any person desiring to be heard in this proceeding should file a comment or protest to the application at the address provided above. Protests should be filed in accordance with Rule 211 of the Federal Energy Regulatory Commission's (FERC) Rules of Practice and Procedures (18 CFR 385.211). Any person desiring to become a party to these proceedings should file a motion to intervene at the above address in accordance with FERC Rule 214 (385.214). Five copies of such comments, protests, or motions to intervene should be sent to the address provided above on or before the date listed above.

Comments on the NRGPML application to export electric energy to Mexico should be clearly marked with OE Docket No. EA–384. An additional copy is to be filed directly with Herbert Thornhill, Legal Department, NRG Power Marketing LLC, 211 Carnegie Center, Princeton, NJ 08540.

A final decision will be made on this application after the environmental impacts have been evaluated pursuant to DOE's National Environmental Policy Act Implementing Procedures (10 CFR Part 1021) and after a determination is made by DOE that the proposed action will not have an adverse impact on the reliability of the U.S. electric power supply system.

Copies of this application will be made available, upon request, for public inspection and copying at the address provided above, by accessing the program Web site at *http://energy.gov/node/11845* or by emailing Angela Troy at *Angela.Troy@hq.doe.gov.*

Issued in Washington, DC, on February 20, 2012.

Brian Mills,

Director, Permitting and Siting, Office of Electricity Delivery and Energy Reliability.

[FR Doc. 2012–4463 Filed 2–24–12; 8:45 am]

BILLING CODE 6450–01–P

DEPARTMENT OF ENERGY

Environmental Management Site-Specific Advisory Board, Paducah

AGENCY: Department of Energy (DOE).

ACTION: Notice of open meeting.

SUMMARY: This notice announces a meeting of the Environmental Management Site-Specific Advisory Board (EM SSAB), Paducah. The Federal Advisory Committee Act (Pub. L. 92–463, 86 Stat. 770) requires that public notice of this meeting be announced in the **Federal Register**.

DATES: Thursday, March 15, 2012; 6 p.m.

ADDRESSES: Barkley Centre, 111 Memorial Drive, Paducah, Kentucky 42001.

FOR FURTHER INFORMATION CONTACT: Reinhard Knerr, Deputy Designated Federal Officer, Department of Energy Paducah Site Office, Post Office Box 1410, MS–103, Paducah, Kentucky 42001, (270) 441–6825.

SUPPLEMENTARY INFORMATION:

Purpose of the Board: The purpose of the Board is to make recommendations to DOE–EM and site management in the areas of environmental restoration, waste management and related activities.

Tentative Agenda

- Call to Order, Introductions, Review of Agenda
- Administrative Issue
  - Draft Recommendation on the Fiscal Year 2014 Integrated Priorities List
- Public Comments
- Adjourn

Breaks Taken as Appropriate.

Public Participation: The EM SSAB, Paducah, welcomes the attendance of the public at its advisory committee meetings and will make every effort to accommodate persons with physical disabilities or special needs. If you require special accommodations due to a disability, please contact Reinhard Knerr as soon as possible in advance of the meeting at the telephone number listed above. Written statements may be filed with the Board either before or after the meeting. Individuals who wish to make oral statements pertaining to agenda items should contact Reinhard Knerr at the telephone number listed above. Requests must be received as soon as possible prior to the meeting and reasonable provision will be made to include the presentation in the agenda. The Deputy Designated Federal Officer is empowered to conduct the meeting in a fashion that will facilitate the orderly conduct of business. Individuals wishing to make public comments will be provided a maximum of five minutes to present their comments. The EM SSAB, Paducah, will hear public comments pertaining to its scope (clean-up standards and environmental restoration; waste management and disposition; stabilization and disposition of non-stockpile nuclear materials; excess facilities; future land use and long-term stewardship; risk assessment and management; and clean-up science and technology activities). Comments outside of the scope may be submitted via written statement as directed above.

Minutes: Minutes will be available by writing or calling Reinhard Knerr at the address and phone number listed above. Minutes will also be available at the following Web site: *http://www.pgdpcab.energy.gov/2011Meetings.html.*

Issued at Washington, DC, on February 21, 2012.

LaTanya R. Butler,

Acting Deputy Committee Management Officer.

[FR Doc. 2012–4461 Filed 2–24–12; 8:45 am]

BILLING CODE 6450–01–P

DEPARTMENT OF ENERGY

[OE Docket No. RRTT–IR–001]

Rapid Response Team for Transmission

AGENCY: Office of Electricity Delivery and Energy Reliability, Department of Energy, DoE.

ACTION: Request for information.

SUMMARY: The Department of Energy's Office of Electricity Delivery and Energy Reliability is seeking information on the questions related to permitting of transmission lines. In responding to this RFI, please specify the role of your company or agency in the electric sector.

DATES: Comments must be submitted on or before March 28, 2012.

ADDRESSES: Comments should be addressed to: Lamont Jackson, Office of Electricity Delivery and Energy Reliability, Mail Code: OE–20, U.S. Department of Energy, 1000 Independence Avenue SW., Washington, DC 20585. Because of delays in handling conventional mail, it is recommended that documents be transmitted by overnight mail, by electronic mail to *Lamont.Jackson@hq.doe.gov,* or by facsimile to 202–586–8008.

FOR FURTHER INFORMATION CONTACT: Lamont Jackson (Program Office) at 202–586–0808, or by email to *Lamont.Jackson@hq.doe.gov.*

SUPPLEMENTARY INFORMATION: Infrastructure projects—such as high voltage, long distance, electric transmission facilities—often involve multiple Federal, State, local and Tribal authorizations and are subject to a wide array of processes and procedural requirements in order to obtain all necessary permits and other authorizations. Delays in securing required statutory reviews, permits, and consultations can threaten the completion projects of national and regional significance.

As our nation moves towards cleaner, more diverse fuel sources and responds to state renewable energy standards, a number of developers are looking to build electric generators where the fuel is most abundant, which is often far from electric customers, thereby requiring long transmission lines. At least three problems may arise when trying to develop this type of infrastructure: (1) Non-synchronous evaluations by all governmental entities with jurisdiction; (2) uncertainty about whether all necessary permits and approvals will be received; and (3) significantly different development times for generation and transmission. This Request for Information is focused on making the development times for generation and transmission to be more commensurate with one another.

While most types of electric generators can be developed within a few years, developing the transmission necessary for that generation may take much longer. The differential in development times between generation and transmission creates a Catch-22 that inhibits the development of both. (Of course if a load serving entity is developing both the generation and transmission for its own customers, then no such Catch-22 exists.) While generation developers need assurance that transmission will be built before they will commit to building the generation, the transmission developers need a commitment that the generation will be built. As the differential in development times increases, the Catch-22 deepens, thereby hampering the building the infrastructure this Nation needs.

Presidential Memorandum—Speeding Infrastructure Development Through More Efficient and Effective Permitting and Environmental Review

On August 31, 2011, the President issued a memorandum to the heads of Executive Departments and Agencies. That Memorandum states:

> in the current economic climate it is critical that agencies take steps to expedite permitting and review, through such strategies as integrating planning and environmental reviews; coordinating multi-agency or multi-governmental reviews and approvals to run concurrently; setting clear schedules for completing steps in the environmental review and permitting process; and utilizing information technologies to inform the public about the progress of environmental reviews as well as the progress of Federal permitting and review processes.

It further states that agencies should ''ensure that their processes for reviewing infrastructure proposals work efficiently to protect our environment, provide for public participation and certainty of process, ensure safety, and support vital economic growth.''

Rapid Response Team for Transmission

Recognizing the need for Federal agencies to coordinate their efforts on transmission and to quickly respond to challenges, nine Federal agencies have been closely coordinating their review of electric transmission on Federal lands under a joint Memorandum of Understanding (MOU) executed in 2009.

Building on the cooperation developed through the MOU, and in response to the Presidential Memorandum, on October 5, 2011, the Administration announced the creation of a Rapid Response Team for Transmission (RRTT).

The RRTT aims to improve the overall quality and timeliness of electric transmission infrastructure permitting, review, and consultation by the Federal government on both Federal and non-Federal lands through:

- Coordinating statutory permitting, review, and consultation schedules and processes among involved Federal and state agencies, as appropriate, through Integrated Federal Planning;
- Applying a uniform and consistent approach to consultations with Tribal governments; and,
- Resolving interagency conflicts and ensuring that all involved agencies are fully engaged and meeting timelines.

Participating Agencies include: the Department of Agriculture, the Department of Commerce, the Department of Defense, the Department of Energy, the Department of Interior, the Environmental Protection Agency, the Federal Energy Regulatory Commission, the Advisory Council on Historic Preservation, and the White House Council on Environmental Quality.

Request for Information (RFI)

Building upon the Presidential Memorandum and in support of the RRTT, the Department of Energy's Office of Electricity is seeking information on the questions asked below. In responding to this RFI, please specify the role of your company or agency in the electric sector.

(1). The development timelines for generation and attendant transmission are often not coordinated or run concurrently. Because of the lengthy time to obtain regulatory reviews, permits and approvals (collectively ''Regulatory Permits''), major new transmission lines can take significantly longer to develop than some types of generation to which the transmission would connect. This Request for Information will refer to the difference in development times between generation and transmission as

''Incongruent Development Times.'' Please answer the following [1]:

a. Describe the challenges created both by the timeline for obtaining Regulatory Permits for transmission and by the Incongruent Development Times.

b. To what extent do the Incongruent Development Times hamper transmission and/or generation infrastructure development?

c. What are the primary risks associated with developing transmission vis-à-vis the timeline for obtaining Regulatory Permits as well as the Incongruent Development Times?

d. How is the financing for developing the attendant transmission influenced by its lengthy development time and by the Dissonant Development Times?

e. How if at all, do development timelines and the Incongruent Development Times affect the decisions made in utilities' integrated resource planning, if applicable?

f. How do development timelines and the Incongruent Development Times affect the ability of parties to enter into open seasons or power-purchase agreements?

(2) Besides improving the efficiency of permitting and approving transmission, are there any other steps the federal government [2] could take to eliminate the barriers created by the Dissonant Development Times?

(3) What strategies can the Federal government take to decrease the time that Federal agencies require for evaluating Regulatory Permits for transmission? What other steps can the Federal government take to address the challenges created by Incongruent Development Times?

(4) One way to make the Regulatory Permit process and development times between remote generation and attendant transmission more commensurate, is to decrease the time for permitting transmission by some amount. In determining how much time can be saved, developing a benchmark may be helpful. What benchmark should be used?

a. Example—power purchase agreements as the benchmark: how far in the future do load serving entities (LSE's) seek to purchase energy or capacity from remote resources? Do LSE's seek PPAs that begin delivering energy/capacity 3 years from the signing of the PPA? 7 years? 10 years? Please explain why PPA's are signed at this time.

b. Example—development times as the benchmark: How long does it take to design, permit and build different types of remote generation?

(5) In your experience, how long does it take to design, permit and build transmission?

(6) Assume that Federal, state, Tribal and local governments sought to set a goal for the length of time used for completing the Regulatory Permitting process for transmission projects so that the development times between generation and transmission were more commensurate, what goal should that be? As the length of the project and the number of governments with jurisdictions increase so will the time necessary for permitting and approvals; accordingly, consider providing a goal that could be scalable according to the length of the line.

Interested parties to this RFI might include, but are not limited to: federal and state agencies, Native American Tribes, transmission developers, renewable energy developers, investors, manufacturers, electric utilities, independent power producers, non-governmental organizations, academics, and other public, private, or non-profit entities.

Issued in Washington, DC, on February 21, 2012.

Brian Mills,

Director, Permitting and Siting, Office of Electricity Delivery and Energy Reliability.

[FR Doc. 2012–4464 Filed 2–24–12; 8:45 am]

BILLING CODE 6450–01–P

[1] Since the Catch-22 is avoided when a load-serving entity is developing the generation and transmission for its own customers, for purposes of answering the questions, please assume that non-LSE's are developing the generation and its attendant transmission.

[2] While Incongruent Development Times are caused by a number of forces including state, local and Tribal decisions, the parties to the MOU are only Federal agencies and, therefore, this RFI focuses on how the federal agencies can improve their own processes.

DEPARTMENT OF ENERGY

Federal Energy Regulatory Commission

[Docket No. IC12–7–000]

Commission Information Collection Activities; Comment Request; Extension

AGENCY: Federal Energy Regulatory Commission, DOE.

ACTION: Notice of information collection and request for comments.

SUMMARY: In compliance with the requirements of the Paperwork Reduction Act of 1995, 44 U.S.C. 3506(c)(2)(A), the Federal Energy Regulatory Commission (Commission or FERC) is soliciting public comment on the currently approved information collection, FERC–587, Land Description (Public Land States/Non-Public Land States [Rectangular or Non-Rectangular Survey System Lands in Public Land States]).

DATES: Comments on the collection of information are due April 27, 2012.

ADDRESSES: You may submit comments (identified by Docket No. IC12–7–000) by either of the following methods:

- *eFiling at Commission's Web Site: http://www.ferc.gov/docs-filing/efiling.asp.*
- *Mail/Hand Delivery/Courier:* Federal Energy Regulatory Commission, Secretary of the Commission, 888 First Street NE., Washington, DC 20426.

Instructions: All submissions must be formatted and filed in accordance with submission guidelines at: *http://www.ferc.gov/help/submission-guide.asp.* For user assistance contact FERC Online Support by email at *ferconlinesupport@ferc.gov,* or by phone at: (866) 208–3676 (toll-free), or (202) 502–8659 for TTY.

Docket: Users interested in receiving automatic notification of activity in this docket or in viewing/downloading comments and issuances in this docket may do so at *http://www.ferc.gov/docs-filing/docs-filing.asp.*

FOR FURTHER INFORMATION CONTACT: Ellen Brown may be reached by email at *DataClearance@FERC.gov,* telephone at (202) 502–8663, and fax at (202) 273–0873.

SUPPLEMENTARY INFORMATION:

Title: FERC–587, Land Description (Public Land States/Non-Public Land States [Rectangular or Non-Rectangular Survey System Lands in Public Land States]).

OMB Control No.: 1902–0145.

Type of Request: Three-year extension of the FERC–587 information collection requirements with no changes to the current reporting requirements.

Abstract: The Commission requires the FERC–587 information collection to satisfy the requirements of section 24 of the Federal Power Act (FPA). The Federal Power Act grants the Commission authority to issue licenses for the development and improvement of navigation and for the development, transmission, and utilization of power across, along, from or in any of the streams or other bodies of water over which Congress has jurisdiction.[1] The Electric Consumers Protection Act (ECPA) amends the FPA to allow the Commission the responsibility of issuing licenses for nonfederal hydroelectric plants.[2]

Section 24 of the FPA requires that applicants proposing hydropower

[1] 16 U.S.C. Section 797d (2010).

[2] Public Law 99–495, 100 Stat. 1243 (1996).

projects on (or changes to existing projects located within) lands owned by the United States to provide a description of the applicable U.S. land. Additionally, the FPA requires the notification of the Commission and Secretary of the Interior of the hydropower proposal. FERC–587 consolidates the information required and identifies hydropower project boundary maps associated with the applicable U.S. land.

The information consolidated by the Form No. 587 verifies the accuracy of the information provided for the FERC–587 to the Bureau of Land Management (BLM) and the Department of the Interior (DOI). Moreover, this information ensures that U.S. lands can be reserved as hydropower sites and withdrawn from other uses.

Type of Respondents: Applicants proposing hydropower projects on (or changes to existing projects located within) lands owned by the United States.

Estimate of Annual Burden: [3] The Commission estimates the total Public Reporting Burden for this information collection as:

FERC–587 (IC12–7–000): LAND DESCRIPTION (PUBLIC LAND STATES/NON-PUBLIC LAND STATES [RECTANGULAR OR NON-RECTANGULAR SURVEY SYSTEM LANDS IN PUBLIC LAND STATES])

	Number of respondents (A)	Number of responses per respondent (B)	Total number of responses (A) × (B) = (C)	Average burden hours per response (D)	Estimated total annual burden (C) × (D)
Hydropower Project Applicants	250	1	250	1	250

The total estimated annual cost burden to respondents is $17,252 [250 hours ÷ 2,080 [4] hours/year = 0.12019 * $143,540/year [5] = $17,252].

The estimated annual cost of filing the FERC–587 per response is $69 [$17,252 ÷ 250 responses = $69/response].

Comments: Comments are invited on: (1) Whether the collection of information is necessary for the proper performance of the functions of the Commission, including whether the information will have practical utility; (2) the accuracy of the agency's estimate of the burden and cost of the collection of information, including the validity of the methodology and assumptions used; (3) ways to enhance the quality, utility and clarity of the information collection; and (4) ways to minimize the burden of the collection of information on those who are to respond, including the use of automated collection techniques or other forms of information technology.

Dated: February 17, 2012.

Kimberly D. Bose,

Secretary.

[FR Doc. 2012–4418 Filed 2–24–12; 8:45 am]

BILLING CODE 6717–01–P

DEPARTMENT OF ENERGY

Federal Energy Regulatory Commission

[Docket No. IC12–6–000]

Commission Information Collection Activities; Comment Request; Extension

AGENCY: Federal Energy Regulatory Commission, DOE.

ACTION: Notice of information collection and request for comments.

SUMMARY: In compliance with the requirements of the Paperwork Reduction Act of 1995, 44 U.S.C. 3506(c)(2)(A), the Federal Energy Regulatory Commission (Commission or FERC) is soliciting public comment on the currently approved information collection, FERC–585, Reporting of Electric Energy shortages and Contingency Plans under PURPA.

DATES: Comments on the collection of information are due April 27, 2012.

ADDRESSES: You may submit comments (identified by Docket No. IC12–6–000) by either of the following methods:

- *eFiling at Commission's Web Site: http://www.ferc.gov/docs-filing/efiling.asp.*
- *Mail/Hand Delivery/Courier:* Federal Energy Regulatory Commission, Secretary of the Commission, 888 First Street NE., Washington, DC 20426.

Instructions: All submissions must be formatted and filed in accordance with submission guidelines at: *http://www.ferc.gov/help/submission-guide.asp.* For user assistance contact FERC Online Support by email at *ferconlinesupport@ferc.gov,* or by phone at: (866) 208–3676 (toll-free), or (202) 502–8659 for TTY.

Docket: Users interested in receiving automatic notification of activity in this docket or in viewing/downloading comments and issuances in this docket may do so at *http://www.ferc.gov/docs-filing/docs-filing.asp.*

FOR FURTHER INFORMATION CONTACT: Ellen Brown may be reached by email at *DataClearance@FERC.gov,* telephone at (202) 502–8663, and fax at (202) 273–0873.

SUPPLEMENTARY INFORMATION:

Title: FERC–585, Reporting of Electric Energy shortages and Contingency Plans under PURPA.

OMB Control No.: 1902–0138.

Type of Request: Three-year extension of the FERC–585 information collection requirements with no changes to the current reporting requirements.

Abstract: The information collected under the requirements of FERC–585, ''Reporting of Electric Energy Shortages and Contingency Plans under PURPA'', is used by the Commission to implement the statutory provisions of section 206 of the Public Utility Regulatory Policies Act of 1979 (PURPA) Public Law 95–617, 92 Stat. 3117. Section 206 of PURPA amended the Federal Power Act (FPA) by adding a new subsection (g) to section 202, under which the Commission by rule, was to require each public utility to (1) report to the Commission and appropriate state regulatory authorities

[3] Burden is defined as the total time, effort, or financial resources expended by persons to generate, maintain, retain, or disclose or provide information to or for a Federal agency. For further explanation of what is included in the information collection burden, reference 5 Code of Federal Regulations 1320.3.

[4] 2,080 hours = 40 hours/week * 52 weeks (1 year).

[5] Average annual salary per employee in 2012.

of any anticipated shortages of electric energy or capacity which would affect the utility's capability to serve its wholesale customers; and (2) report to the Commission and any appropriate state regulatory authority contingency plan that would outline what circumstances might give rise to such occurrences.

In Order No. 575,[1] the Commission modified the reporting requirements in 18 CFR 294.101(b) to provide that, if a public utility includes in its rates schedule, provisions that: (a) During electric energy and capacity shortages it will treat firm power wholesale customers without undue discrimination or preference; and (b) it will report any modifications to its contingency plan for accommodating shortages within 15 days to the appropriate state regulatory agency and to the affected wholesale customers, then the utility need not file with the Commission an additional statement of contingency plan for accommodating such shortages. This revision merely changed the reporting mechanism; the public utility's contingency plan would be located in its filed rate rather than in a separate document.

In Order No. 659,[2] the Commission modified the reporting requirements in 18 CFR 294.101(e) to provide that the means by which public utilities must comply with the requirements to report shortages and anticipated shortages is to submit this information electronically using the Office of Electric Reliability's pager system at *emergency@ferc.gov* in lieu of submitting an original and two copies with the Secretary of the Commission.

The Commission uses the information to evaluate and formulate an appropriate option for action in the event an unanticipated shortage is reported and/or materializes. Without this information, the Commission and State agencies would be unable to: (1) Examine and approve or modify utility actions, (2) prepare a response to anticipated disruptions in electric energy, and (3) ensure equitable treatment of all public utility customers under the shortage situations. The Commission implements these filing requirements in the Code of Federal Regulations (CFR) under 18 CFR part 294.

Type of Respondents: Public utilities.

Estimate of Annual Burden[3]: The Commission estimates the total Public Reporting Burden for this information collection as:

FERC–585 (IC12–6–000): REPORTING OF ELECTRIC ENERGY SHORTAGES AND CONTINGENCY PLANS UNDER PURPA

	Number of respondents	Number of responses per respondent	Total number of responses	Average burden hours per response	Estimated total annual burden
	(A)	(B)	(A) × (B) = (C)	(D)	(C) × (D)
Contingency Plan	1	1	1	73	73
Capacity Shortage	1	1	1	0.25	0.25
Total	N/A[4]	N/A[4]	2	N/A[4]	73.25

The total estimated annual cost burden to respondents is $5,054 [73.25 hours ÷ 2,080[5] hours/year = 0.03521 * $143,540/year[6] = $5,054].

The estimated annual cost of filing the FERC–585 per response is $2,527.02 [$5,054 ÷ 2 responses = $2,527/response].

Comments: Comments are invited on: (1) Whether the collection of information is necessary for the proper performance of the functions of the Commission, including whether the information will have practical utility; (2) the accuracy of the agency's estimate of the burden and cost of the collection of information, including the validity of the methodology and assumptions used; (3) ways to enhance the quality, utility and clarity of the information collection; and (4) ways to minimize the burden of the collection of information on those who are to respond, including the use of automated collection techniques or other forms of information technology.

Dated: February 17, 2012.

Kimberly D. Bose,

Secretary.

[FR Doc. 2012–4417 Filed 2–24–12; 8:45 am]

BILLING CODE 6717–01–P

DEPARTMENT OF ENERGY

Federal Energy Regulatory Commission

[Docket No. IC12–8–000]

Commission Information Collection Activities; Comment Request; Extension

AGENCY: Federal Energy Regulatory Commission, DOE.

ACTION: Notice of information collection and request for comments.

SUMMARY: In compliance with the requirements of the Paperwork Reduction Act of 1995, 44 U.S.C. 3506(c)(2)(A), the Federal Energy Regulatory Commission is soliciting public comment on the currently approved information collection, FERC–567, Gas Pipeline Certificates: Annual Reports of System Flow Diagrams and System Capacity.

DATES: Comments on the collection of information are due April 27, 2012.

ADDRESSES: You may submit comments (identified by Docket No. IC12–8–000) by either of the following methods:

- *eFiling at Commission's Web site: http://www.ferc.gov/docs-filing/efiling.asp.*
- *Mail/Hand Delivery/Courier:* Federal Energy Regulatory Commission, Secretary of the Commission, 888 First Street NE., Washington, DC 20426.

Instructions: All submissions must be formatted and filed in accordance with submission guidelines at: *http://www.ferc.gov/help/submission-guide.asp.* For user assistance contact FERC Online Support by email at *ferconlinesupport@ferc.gov,* or by phone at: (866) 208–3676 (toll-free), or (202) 502–8659 for TTY.

Docket: Users interested in receiving automatic notification of activity in this

[1] 60 FR 4859 (25 Jan 1995).

[2] 70 FR 35028 (16 Jun 2005).

[3] Burden is defined as the total time, effort, or financial resources expended by persons to generate, maintain, retain, or disclose or provide information to or for a Federal agency. For further explanation of what is included in the information collection burden, reference 5 Code of Federal Regulations 1320.3(b)(1).

[4] Not applicable.

[5] 2080 hours = 40 hours/week * 52 weeks (1 year).

[6] Average annual salary per employee in 2012.

docket or in viewing/downloading comments and issuances in this docket may do so at *http://www.ferc.gov/docs-filing/docs-filing.asp.*

FOR FURTHER INFORMATION CONTACT: Ellen Brown may be reached by email at *DataClearance@FERC.gov,* telephone at (202) 502–8663, and fax at (202) 273–0873.

SUPPLEMENTARY INFORMATION:

Title: FERC–567, Gas Pipeline Certificates: Annual Reports of System Flow Diagrams and System Capacity.

OMB Control No.: 1902–0005.

Type of Request: Three-year extension of the FERC–567 information collection requirements with no changes to the current reporting requirements.

Abstract: The Commission uses the information from the FERC–567 to obtain accurate data on pipeline facilities and the peak capacity of these facilities. Additionally, the Commission validates the need for new facilities proposed by pipelines in certificate applications. By modeling an applicant's pipeline system, Commission staff utilizes the FERC–567 data to determine configuration and location of installed pipeline facilities; verify and determine the receipt and delivery points between shippers, producers and pipeline companies; determine the location of receipt and delivery points and emergency interconnections on a pipeline system; determine the location of pipeline segments, laterals and compressor stations on a pipeline system; verify pipeline segment lengths and pipeline diameters; justify the maximum allowable operating pressures and suction and discharge pressures at compressor stations; verify the installed horsepower and volumes compressed at each compressor station; determine the existing shippers and producers currently using each pipeline company; verify peak capacity on the system; and develop and evaluate alternatives to the proposed facilities as a means to mitigate environmental impact of new pipeline construction.

18 Code of Federal Regulations (CFR) 260.8(a) requires each major natural gas pipeline with a system delivery capacity exceeding 100,000 Mcf per day to submit by June 1 of each year, diagrams reflecting operating conditions on the pipeline's main transmission system during the previous 12 months ended December 31. 18 CFR 284.13 requires each interstate pipeline that provides transportation subject to the provisions of Subparts B and G of Part 284 to make an annual filing by March 1 of each year showing the estimated peak day capacity of the pipeline's system. These physical/engineering data are not included as part of any other data collection requirement.

Type of Respondents: Natural gas pipelines.

Estimate of Annual Burden: [1] The Commission estimates the total Public Reporting Burden for this information collection as:

	Number of respondents (A)	Number of responses per respondent (B)	Total number of responses (A) × (B) = (C)	Average burden hours per response (D)	Estimated total annual burden (C) × (D)
Natural Gas Pipelines	103	1	103	1	103

The total estimated annual cost burden to respondents is $ [103 hours ÷ 2,080 [2] hours/year = 0.04952 * $143,540/year [3] = $7,108].

The estimated annual cost of filing the FERC–567 per response is $69 [$7,108 ÷ 103 responses = $69/response].

Comments: Comments are invited on: (1) Whether the collection of information is necessary for the proper performance of the functions of the Commission, including whether the information will have practical utility; (2) the accuracy of the agency's estimate of the burden and cost of the collection of information, including the validity of the methodology and assumptions used; (3) ways to enhance the quality, utility and clarity of the information collection; and (4) ways to minimize the burden of the collection of information on those who are to respond, including the use of automated collection techniques or other forms of information technology.

Dated: February 17, 2012.

Kimberly D. Bose,

Secretary.

[FR Doc. 2012–4419 Filed 2–24–12; 8:45 am]

BILLING CODE 6717–01–P

DEPARTMENT OF ENERGY

Federal Energy Regulatory Commission

[Docket No. CP12–56–000]

ANR Pipeline Company; Notice of Application

Take notice that on February 3, 2012, ANR Pipeline Company (ANR), 717 Texas Street, Houston, Texas 77002–2761 filed with the Federal Energy Regulatory Commission (Commission) an application under section 7(b) of the Natural Gas Act for permission and approval to abandon its present and any future obligation to perform transportation service through approximately 7.0 miles of 20-inch pipeline extending from High Island Block A–552 to High Island Block A–539, located in federal waters, offshore Texas, all as more fully set forth in the application which is on file with the Commission and open to public inspection. This filing is available for review at the Commission in the Public Reference Room or may be viewed on the Commission's Web site at *http://www.ferc.gov* using the ''eLibrary'' link. Enter the docket number excluding the last three digits in the docket number field to access the document. For assistance, contact FERC at *FERCOnlineSupport@ferc.gov* or call toll-free, (886) 208–3676 or TYY, (202) 502–8659.

Any questions regarding the application should be directed to Rene Staeb, Manager, Project Determinations & Regulatory Administration, ANR Pipeline Company, 717 Texas Street, Houston, Texas 77002–2761, or telephone (832) 320–5215 or fax (832) 320–6215 or by email *Rene_Staeb@transcanada.com.*

Pursuant to section 157.9 of the Commission's rules, 18 CFR 157.9, within 90 days of this Notice the Commission staff will either: Complete

[1] Burden is defined as the total time, effort, or financial resources expended by persons to generate, maintain, retain, or disclose or provide information to or for a Federal agency. For further explanation of what is included in the information collection burden, reference 5 Code of Federal Regulations 1320.3(b)(1).

[2] 2080 hours = 40 hours/week * 52 weeks (1 year).

[3] Average annual salary per employee in 2012.

its environmental assessment (EA) and place it into the Commission's public record (eLibrary) for this proceeding; or issue a Notice of Schedule for Environmental Review. If a Notice of Schedule for Environmental Review is issued, it will indicate, among other milestones, the anticipated date for the Commission staff's issuance of the final environmental impact statement (FEIS) or EA for this proposal. The filing of the EA in the Commission's public record for this proceeding or the issuance of a Notice of Schedule for Environmental Review will serve to notify federal and state agencies of the timing for the completion of all necessary reviews, and the subsequent need to complete all federal authorizations within 90 days of the date of issuance of the Commission staff's FEIS or EA.

There are two ways to become involved in the Commission's review of this project. First, any person wishing to obtain legal status by becoming a party to the proceedings for this project should, on or before the comment date stated below file with the Federal Energy Regulatory Commission, 888 First Street NE., Washington, DC 20426, a motion to intervene in accordance with the requirements of the Commission's Rules of Practice and Procedure (18 CFR 385.214 or 385.211) and the Regulations under the NGA (18 CFR 157.10). A person obtaining party status will be placed on the service list maintained by the Secretary of the Commission and will receive copies of all documents filed by the applicant and by all other parties. A party must submit seven copies of filings made in the proceeding with the Commission and must mail a copy to the applicant and to every other party. Only parties to the proceeding can ask for court review of Commission orders in the proceeding.

However, a person does not have to intervene in order to have comments considered. The second way to participate is by filing with the Secretary of the Commission, as soon as possible, an original and two copies of comments in support of or in opposition to this project. The Commission will consider these comments in determining the appropriate action to be taken, but the filing of a comment alone will not serve to make the filer a party to the proceeding. The Commission's rules require that persons filing comments in opposition to the project provide copies of their protests only to the party or parties directly involved in the protest.

Persons who wish to comment only on the environmental review of this project should submit an original and two copies of their comments to the Secretary of the Commission. Environmental commentors will be placed on the Commission's environmental mailing list, will receive copies of the environmental documents, and will be notified of meetings associated with the Commission's environmental review process. Environmental commentors will not be required to serve copies of filed documents on all other parties. However, the non-party commentors will not receive copies of all documents filed by other parties or issued by the Commission (except for the mailing of environmental documents issued by the Commission) and will not have the right to seek court review of the Commission's final order.

The Commission strongly encourages electronic filings of comments, protests and interventions in lieu of paper using the ''eFiling'' link at *http://www.ferc.gov*. Persons unable to file electronically should submit an original and seven copies of the protest or intervention to the Federal Energy regulatory Commission, 888 First Street NE., Washington, DC 20426.

Comment Date: 5 p.m. Eastern Time on March 9, 2012.

Dated: February 17, 2012.

Kimberly D. Bose,

Secretary.

[FR Doc. 2012–4416 Filed 2–24–12; 8:45 am]

BILLING CODE 6717–01–P

DEPARTMENT OF ENERGY

Federal Energy Regulatory Commission

[Docket No. CP12–59–000]

Dominion Transmission, Inc.; Notice of Application

On February 10, 2012, Dominion Transmission, Inc. (DTI) filed with the Federal Energy Regulatory Commission (Commission) an application under section 7(c) of the Natural Gas Act and the Rules and Regulations of the Commission's Regulations for authority to establish a protective boundary for the Sabinsville Storage Pool located in Tioga County, Pennsylvania. The expansion would further the integrity and protection of the gas storage field, as more fully detailed in the Application. DTI requests that the Commission issue all required authorizations by August 1, 2012.

Questions concerning this application may be directed to Amanda K. Prestage, Regulatory and Certificates Analyst III, Dominion Transmission, Inc., 701 East Cary Street, Richmond, Virginia 23219, by calling 804–771–4416 or by emailing *Amanda.K.Prestage@dom.com.*

Pursuant to section 157.9 of the Commission's rules, 18 CFR 157.9, within 90 days of this Notice the Commission staff will either: complete its environmental assessment (EA) and place it into the Commission's public record (eLibrary) for this proceeding; or issue a Notice of Schedule for Environmental Review. If a Notice of Schedule for Environmental Review is issued, it will indicate, among other milestones, the anticipated date for the Commission staff's issuance of the final environmental impact statement (FEIS) or EA for this proposal. The filing of the EA in the Commission's public record for this proceeding or the issuance of a Notice of Schedule for Environmental Review will serve to notify federal and state agencies of the timing for the completion of all necessary reviews, and the subsequent need to complete all federal authorizations within 90 days of the date of issuance of the Commission staff's FEIS or EA.

There are two ways to become involved in the Commission's review of this project. First, any person wishing to obtain legal status by becoming a party to the proceedings for this project should, on or before the comment date stated below, file with the Federal Energy Regulatory Commission, 888 First Street NE., Washington, DC 20426, a motion to intervene in accordance with the requirements of the Commission's Rules of Practice and Procedure (18 CFR 385.214 or 385.211) and the Regulations under the NGA (18 CFR 157.10). A person obtaining party status will be placed on the service list maintained by the Secretary of the Commission and will receive copies of all documents filed by the applicant and by all other parties. A party must submit seven copies of filings made with the Commission and must mail a copy to the applicant and to every other party in the proceeding. Only parties to the proceeding can ask for court review of Commission orders in the proceeding.

However, a person does not have to intervene in order to have comments considered. The second way to participate is by filing with the Secretary of the Commission, as soon as possible, an original and two copies of comments in support of or in opposition to this project. The Commission will consider these comments in determining the appropriate action to be taken, but the filing of a comment alone will not serve to make the filer a party to the proceeding. The Commission's rules require that persons filing comments in opposition to the project provide copies of their protests only to

the party or parties directly involved in the protest.

The Commission encourages electronic submission of protests and interventions in lieu of paper using the ''eFiling'' link at *http://www.ferc.gov.* Persons unable to file electronically should submit an original and seven copies of the protest or intervention to the Federal Energy Regulatory Commission, 888 First Street NE., Washington, DC 20426. This filing is accessible on-line at *http://www.ferc.gov* using the ''eLibrary'' link and is available for review in the Commission's Public Reference Room in Washington, DC. There is an ''eSubscription'' link on the Web site that enables subscribers to receive email notification when a document is added to a subscribed docket(s). For assistance with any FERC Online service, please email *FERCOnlineSupport@ferc.gov,* or call (866) 208–3676 (toll free). For TTY, call (202) 502–8659.

Comment Date: 5 p.m. Eastern Time on March 8, 2012.

Dated: February 16, 2012.

Kimberly D. Bose,

Secretary.

[FR Doc. 2012–4414 Filed 2–24–12; 8:45 am]

BILLING CODE 6717–01–P

DEPARTMENT OF ENERGY

Federal Energy Regulatory Commission

[Project No. 13680–001]

Bryant Mountain, LLC; Notice of Intent To File License Application, Filing of Pre-Application Document (PAD), and Commencement of Pre-Filing Process; Notice of Intent To Prepare an Environmental Impact Statement and Conduct Scoping; Request for Comments on the PAD and Scoping Document, and Identification of Issues and Associated Study Requests

a. *Type of Filing:* Notice of Intent to File License Application for an Original License and Commencing Pre-filing Process.

b. *Project No.:* 13680–001.

c. *Dated Filed:* December 21, 2011.

d. *Submitted By:* Bryant Mountain, LLC.

e. *Name of Project:* Bryant Mountain Pumped Storage Hydroelectric Project.

f. *Location:* Near Malin in Klamath County, Oregon, on lands administered by the U.S. Bureau of Reclamation and private lands.

g. *Filed Pursuant to:* 18 CFR Part 5 of the Commission's Regulations.

h. *Potential Applicant Contact:* Mr. Bart O'Keeffe, Bryant Mountain, LLC, P.O. Box 1916, Discovery Bay, California, 94505, (925) 634–1550 or email at *bmokeeffe@sbcglobal.net.*

i. *FERC Contact:* Ryan Hansen at (202) 502–8074 or email at *ryan.hansen@ferc.gov.*

j. *Cooperating agencies:* Federal, state, local, and tribal agencies with jurisdiction and/or special expertise with respect to environmental issues that wish to cooperate in the preparation of the environmental document should follow the instructions for filing such requests described in item o below. Cooperating agencies should note the Commission's policy that agencies that cooperate in the preparation of the environmental document cannot also intervene. *See* 94 FERC ¶ 61,076 (2001).

k. *With this notice, we are initiating informal consultation with:* (a) The U.S. Fish and Wildlife Service under section 7 of the Endangered Species Act and the joint agency regulations thereunder at 50 CFR, part 402 and (b) the State Historic Preservation Officer, as required by section 106, National Historical Preservation Act, and the implementing regulations of the Advisory Council on Historic Preservation at 36 CFR 800.2.

l. With this notice, we are designating Bryant Mountain, LLC, as the Commission's non-federal representative for carrying out informal consultation, pursuant to section 7 of the Endangered Species Act and section 106 of the National Historic Preservation Act.

m. Bryant Mountain, LLC, filed with the Commission a Pre-Application Document (PAD; including a proposed process plan and schedule), pursuant to 18 CFR 5.6 of the Commission's regulations.

n. A copy of the PAD is available for review at the Commission in the Public Reference Room or may be viewed on the Commission's Web site (*http://www.ferc.gov*), using the ''eLibrary'' link. Enter the docket number, excluding the last three digits in the docket number field to access the document. For assistance, contact FERC Online Support at *FERCONlineSupport@ferc.gov* or toll free at 1–866–208–3676, or for TTY, (202) 502–8659. A copy is also available for inspection and reproduction at the address in paragraph h.

Register online at *http://www.ferc.gov/docs-filing/esubscription.asp* to be notified via email of new filing and issuances related to this or other pending projects. For assistance, contact FERC Online Support.

o. With this notice, we are soliciting comments on the PAD and Commission's staff Scoping Document 1 (SD1), as well as study requests. All comments on the PAD and SD1, and study requests should be sent to the address above in paragraph h. In addition, all comments on the PAD and SD1, study requests, requests for cooperating agency status, and all communications to and from Commission staff related to the merits of the potential application must be filed with the Commission. Documents may be filed electronically via the Internet. See 18 CFR 385.2001(a)(1)(iii) and the instructions on the Commission's Web site *http://www.ferc.gov/docs-filing/efiling.asp.* Commenters can submit brief comments up to 6,000 characters, without prior registration, using the eComment system at *http://www.ferc.gov/docs-filing/ecomment.asp.* You must include your name and contact information at the end of your comments. For assistance, please contact FERC Online Support. Although the Commission strongly encourages electronic filing, documents may also be paper-filed. To paper-file, mail an original and seven copies to: Kimberly D. Bose, Secretary, Federal Energy Regulatory Commission, 888 First Street NE., Washington, DC 20426.

All filings with the Commission must include on the first page, the project name (Bryant Mountain Pumped Storage Hydroelectric Project) and the project number (P–13680–001), and bear the appropriate heading: ''Comments on Pre-Application Document,'' ''Study Requests,'' ''Comments on Scoping Document 1,'' ''Request for Cooperating Agency Status,'' or ''Communications to and from Commission Staff.'' Any individual or entity interested in submitting study requests, commenting on the PAD or SD1, and any agency requesting cooperating status must do so by April 16, 2012.

p. We intend to prepare an Environmental Impact Statement (EIS) for this project. The scoping meetings identified below satisfy the NEPA scoping requirements.

Scoping Meetings

Commission staff will hold two scoping meetings in the vicinity of the project at the time and place noted below. The daytime meeting will focus on resource agency, Indian tribes, and non-governmental organization concerns, while the evening meeting is primarily for receiving input from the public. We invite all interested individuals, organizations, and agencies to attend one or both of the meetings, and to assist staff in identifying particular study needs, as well as the scope of environmental issues to be

addressed in the environmental document. The times and locations of these meetings are as follows:

Daytime Scoping Meeting

Date and Time: Wednesday, March 14, 2012, 9 a.m.–12 p.m.

Location: Shilo Inn Suites Hotel, 2500 Almond St., Klamath Falls, OR 97601.

Phone Number: (541) 885–7980.

Evening Scoping Meeting

Date and Time: Tuesday, March 13, 2012, 6 p.m.–9 p.m.

Location: Malin City Park Hall, 2307 Third Street, Malin, OR 97632.

Phone Number: (541) 723–2021.

Scoping Document 1 (SD1), which outlines the subject areas to be addressed in the environmental document, was mailed to the individuals and entities on the Commission's mailing list. Copies of SD1 will be available at the scoping meetings, or may be viewed on the Web at *http://www.ferc.gov,* using the ''eLibrary'' link. Follow the directions for accessing information in paragraph n. Based on all oral and written comments, a Scoping Document 2 (SD2) may be issued. SD2 may include a revised process plan and schedule, as well as a list of issues, identified through the scoping process.

Environmental Site Review

The potential applicant and Commission staff will conduct an *Environmental Site Review* of the project on Tuesday, April 13, 2012, starting at 1 p.m. In addition to the scoping meetings, we will be conducting an environmental site review on Tuesday, March 13, 2012. All interested participants should meet no later than 1 p.m. in the parking lot of Malin City Park Hall, 2307 Third Street, Malin, OR 97632. All participants are responsible for their own transportation.

Meeting Objectives

At the scoping meetings, staff will: (1) Initiate scoping of the issues; (2) review and discuss existing conditions and resource management objectives; (3) review and discuss existing information and identify preliminary information and study needs; (4) review and discuss the process plan and schedule for pre-filing activity that incorporates the time frames provided for in Part 5 of the Commission's regulations and, to the extent possible, maximizes coordination of federal, state, and tribal permitting and certification processes; and (5) discuss the appropriateness of any federal or state agency or Indian tribe acting as a cooperating agency for development of an environmental document.

Meeting participants should come prepared to discuss their issues and/or concerns. Please review the PAD in preparation for the scoping meetings. Directions on how to obtain a copy of the PAD and SD1 are included in item n. of this document.

Meeting Procedures

The meetings will be recorded by a stenographer and will be placed in the public records of the project.

Dated: February 16, 2012.

Kimberly D. Bose,

Secretary.

[FR Doc. 2012–4412 Filed 2–24–12; 8:45 am]

BILLING CODE 6717–01–P

DEPARTMENT OF ENERGY

Federal Energy Regulatory Commission

[Docket No. CP12–54–000]

Town of Walden, Colorado; Notice of Application

Take notice that on February 1, 2012, Town of Walden, Colorado (Walden) filed with the Federal Energy Regulatory Commission (Commission) an application under section 7(f) of the Natural Gas Act (NGA) for determination of a service area within which Walden may, without further Commission authorization, provide natural gas distribution service to customers in Colorado and Wyoming. Walden requests that the Commission: (1) Determine that Walden is a local distribution company for purposes of Section 311 of the NGPA; (2) grant Walden a service area determination pursuant to Section 7(f) of the NGA as described in the body of this Application; (3) grant Walden a waiver of all regulatory, accounting, and reporting requirements applicable to natural gas companies under the NGA and the NGPA with respect to the activities covered by this Application and the designated service area; and (4) grant such further relief as the Commission may deem appropriate, all as more fully set forth in the application which is on file with the Commission and open to public inspection. This filing is available for review at the Commission in the Public Reference Room or may be viewed on the Commission's Web site web at *http://www.ferc.gov* using the ''eLibrary'' link. Enter the docket number excluding the last three digits in the docket number field to access the document. For assistance, contact FERC at *FERCOnlineSupport@ferc.gov* or call toll-free, (886) 208–3676 or TYY, (202) 502–8659.

Any questions regarding the application should be directed to Bruce S. Asay, Esq., 1807 Capitol Avenue #203, Cheyenne, WY 82001, or telephone 307–632–2888 or by email *basay@associatedlegal.com* or to Steven Shute, contract operator of Walden Gas at P.O. Box 1054, Glenwood Springs, CO 81602 or telephone 970–928–9208 or by email *pipeline@rof.net.*

Pursuant to section 157.9 of the Commission's rules, 18 CFR 157.9, within 90 days of this Notice the Commission staff will either: complete its environmental assessment (EA) and place it into the Commission's public record (eLibrary) for this proceeding; or issue a Notice of Schedule for Environmental Review. If a Notice of Schedule for Environmental Review is issued, it will indicate, among other milestones, the anticipated date for the Commission staff's issuance of the final environmental impact statement (FEIS) or EA for this proposal. The filing of the EA in the Commission's public record for this proceeding or the issuance of a Notice of Schedule for Environmental Review will serve to notify federal and state agencies of the timing for the completion of all necessary reviews, and the subsequent need to complete all federal authorizations within 90 days of the date of issuance of the Commission staff's FEIS or EA.

There are two ways to become involved in the Commission's review of this project. First, any person wishing to obtain legal status by becoming a party to the proceedings for this project should, on or before the comment date stated below file with the Federal Energy Regulatory Commission, 888 First Street NE., Washington, DC 20426, a motion to intervene in accordance with the requirements of the Commission's Rules of Practice and Procedure (18 CFR 385.214 or 385.211) and the Regulations under the NGA (18 CFR 157.10). A person obtaining party status will be placed on the service list maintained by the Secretary of the Commission and will receive copies of all documents filed by the applicant and by all other parties. A party must submit seven copies of filings made in the proceeding with the Commission and must mail a copy to the applicant and to every other party. Only parties to the proceeding can ask for court review of Commission orders in the proceeding.

However, a person does not have to intervene in order to have comments considered. The second way to participate is by filing with the

Secretary of the Commission, as soon as possible, an original and two copies of comments in support of or in opposition to this project. The Commission will consider these comments in determining the appropriate action to be taken, but the filing of a comment alone will not serve to make the filer a party to the proceeding. The Commission's rules require that persons filing comments in opposition to the project provide copies of their protests only to the party or parties directly involved in the protest.

Persons who wish to comment only on the environmental review of this project should submit an original and two copies of their comments to the Secretary of the Commission. Environmental commentors will be placed on the Commission's environmental mailing list, will receive copies of the environmental documents, and will be notified of meetings associated with the Commission's environmental review process. Environmental commentors will not be required to serve copies of filed documents on all other parties. However, the non-party commentors will not receive copies of all documents filed by other parties or issued by the Commission (except for the mailing of environmental documents issued by the Commission) and will not have the right to seek court review of the Commission's final order.

The Commission strongly encourages electronic filings of comments, protests and interventions in lieu of paper using the ''eFiling'' link at *http://www.ferc.gov.* Persons unable to file electronically should submit an original and seven copies of the protest or intervention to the Federal Energy Regulatory Commission, 888 First Street NE., Washington, DC 20426.

Comment Date: March 8, 2012.

Dated: February 16, 2012.

Kimberly D. Bose,

Secretary.

[FR Doc. 2012–4406 Filed 2–24–12; 8:45 am]

BILLING CODE 6717–01–P

DEPARTMENT OF ENERGY

Federal Energy Regulatory Commission

Combined Notice of Filings #2

Take notice that the Commission received the following electric corporate filings:

Docket Numbers: EC12–68–000.
Applicants: Stephentown Regulation Services LLC.
Description: Request of Stephentown Regulation Services LLC.
Filed Date: 2/16/12.
Accession Number: 20120216–5217.
Comments Due: 5 p.m. ET 2/28/12.

Take notice that the Commission received the following electric rate filings:

Docket Numbers: ER10–2131–001.
Applicants: Grand Ridge Energy LLC.
Description: Supplement to June 20, 2011 Triennial Report of of Grand Ridge Energy LLC.
Filed Date: 2/17/12.
Accession Number: 20120217–5087.
Comments Due: 5 p.m. ET 3/9/12.

Docket Numbers: ER10–2137–001.
Applicants: Beech Ridge Energy LLC.
Description: Supplement to June 20, 2011 Triennial Report of Beech Ridge Energy LLC.
Filed Date: 2/17/12.
Accession Number: 20120217–5086.
Comments Due: 5 p.m. ET 3/9/12.

Docket Numbers: ER10–2138–001; ER10–2139–001.
Applicants: Grand Ridge Energy II LLC, Grand Ridge Energy III LLC.
Description: Supplement to June 20, 2011 Triennial Report of Grand Ridge Energy II LLC, *et al.*
Filed Date: 2/17/12.
Accession Number: 20120217–5088.
Comments Due: 5 p.m. ET 3/9/12.

Docket Numbers: ER10–2140–001.
Applicants: Grand Ridge Energy IV LLC.
Description: Supplement to June 20, 2011 Triennial Report of Grand Ridge Energy IV LLC.
Filed Date: 2/17/12.
Accession Number: 20120217–5089.
Comments Due: 5 p.m. ET 3/9/12.

Docket Numbers: ER10–2141–001.
Applicants: Grand Ridge Energy V LLC.
Description: Supplement to June 20, 2011 Triennial Report of Grand Ridge Energy V LLC.
Filed Date: 2/17/12.
Accession Number: 20120217–5084.
Comments Due: 5 p.m. ET 3/9/12.

Docket Numbers: ER12–161–002.
Applicants: Bishop Hill Energy LLC.
Description: Change in Status Notice of Bishop Hill Energy LLC.
Filed Date: 2/17/12.
Accession Number: 20120217–5128.
Comments Due: 5 p.m. ET 3/9/12.

Docket Numbers: ER12–667–001.
Applicants: ITC Midwest LLC.
Description: Supplemental Filing of ITC Midwest—Northern States Power 205 Filing to be effective 2/21/2012.
Filed Date: 2/17/12.
Accession Number: 20120217–5037.
Comments Due: 5 p.m. ET 3/9/12.

Docket Numbers: ER12–1113–000.
Applicants: Midwest Independent Transmission System Operator, Inc., International Transmission Company.
Description: ITC–DTE River Rouge to be effective 4/17/2012 under ER12–1113.
Filed Date: 2/17/12.
Accession Number: 20120217–5034.
Comments Due: 5 p.m. ET 3/9/12.

Docket Numbers: ER12–1114–000.
Applicants: ITC Midwest LLC.
Description: Filing of a Transmission Agreement to be effective 2/29/2012.
Filed Date: 2/17/12.
Accession Number: 20120217–5047.
Comments Due: 5 p.m. ET 3/9/12.

Docket Numbers: ER12–1115–000.
Applicants: PacifiCorp.
Description: BPA AC Intertie Agreement 6th Revised to be effective 4/18/2012.
Filed Date: 2/17/12.
Accession Number: 20120217–5072.
Comments Due: 5 p.m. ET 3/9/12.

Docket Numbers: ER12–1117–000.
Applicants: Consolidated Edison Company of New York.
Description: Revisions to PASNY/EDDS tariffs to be effective 2/20/2012.
Filed Date: 2/17/12.
Accession Number: 20120217–5073.
Comments Due: 5 p.m. ET 3/9/12.

Docket Numbers: ER12–1118–000.
Applicants: Southern California Edison Company.
Description: Amended SGIA SCE–FlexEnergy, LLC Lamb Canyon Project to be effective 2/18/2012.
Filed Date: 2/17/12.
Accession Number: 20120217–5075.
Comments Due: 5 p.m. ET 3/9/12.

Docket Numbers: ER12–1119–000.
Applicants: Southern California Edison Company.
Description: Amended Expedited Service and Interconnection Agreement Wintec Energy, Ltd., Wintec V to be effective 2/18/2012.
Filed Date: 2/17/12.
Accession Number: 20120217–5076.
Comments Due: 5 p.m. ET 3/9/12.

Docket Numbers: ER12–1120–000.
Applicants: ITC Midwest LLC.
Description: ITC Midwest LLC submits tariff filing per 35.13(a)(2)(iii: Filing of Interconnection Agreement to be effective 4/19/2012.
Filed Date: 2/17/12.
Accession Number: 20120217–5090.
Comments Due: 5 p.m. ET 3/9/12.

The filings are accessible in the Commission's eLibrary system by clicking on the links or querying the docket number.

Any person desiring to intervene or protest in any of the above proceedings

must file in accordance with Rules 211 and 214 of the Commission's Regulations (18 CFR 385.211 and 385.214) on or before 5 p.m. Eastern time on the specified comment date. Protests may be considered, but intervention is necessary to become a party to the proceeding.

eFiling is encouraged. More detailed information relating to filing requirements, interventions, protests, service, and qualifying facilities filings can be found at: *http://www.ferc.gov/docs-filing/efiling/filing-req.pdf.* For other information, call (866) 208–3676 (toll free). For TTY, call (202) 502–8659.

Dated: February 17, 2012.

Nathaniel J. Davis, Sr.,

Deputy Secretary.

[FR Doc. 2012–4435 Filed 2–24–12; 8:45 am]

BILLING CODE 6717–01–P

DEPARTMENT OF ENERGY

Federal Energy Regulatory Commission

Combined Notice of Filings #1

Take notice that the Commission received the following electric rate filings:

Docket Numbers: ER11–2705–003.
Applicants: California Independent System Operator Corporation.
Description: 2012–02–16 CAISO RTPP Compliance Filing to be effective 12/2/2011.
Filed Date: 2/16/12.
Accession Number: 20120216–5160.
Comments Due: 5 p.m. ET 3/8/12.

Docket Numbers: ER12–36–000.
Applicants: PacifiCorp.
Description: Answer to Request for Information of PacifiCorp.
Filed Date: 2/16/12.
Accession Number: 20120216–5150.
Comments Due: 5 p.m. ET 3/8/12.

Docket Numbers: ER12–1102–000.
Applicants: Entergy Services, Inc.
Description: Entergy Operating Companies submits request of specific Commission authorization to include under Service Schedule MSS–3 of the Entergy Service Agreement.
Filed Date: 2/15/12.
Accession Number: 20120216–0201.
Comments Due: 5 p.m. ET 3/7/12.

Docket Numbers: ER12–1109–000.
Applicants: ITC Midwest LLC.
Description: Concurrence to IPL Amended O&T Agreement to be effective 12/31/9998.
Filed Date: 2/16/12.
Accession Number: 20120216–5144.
Comments Due: 5 p.m. ET 3/8/12.

Docket Numbers: ER12–1110–000.
Applicants: ITC Midwest LLC.
Description: Concurrence to MISO Coordination Agreement to be effective 12/31/9998.
Filed Date: 2/16/12.
Accession Number: 20120216–5145.
Comments Due: 5 p.m. ET 3/8/12.

Docket Numbers: ER12–1111–000.
Applicants: Parkview AMC Energy, LLC.
Description: Amended Baseline Filing to be effective 2/3/2012.
Filed Date: 2/16/12.
Accession Number: 20120216–5164.
Comments Due: 5 p.m. ET 3/8/12.

Docket Numbers: ER12–1112–000.
Applicants: Midwest Independent Transmission System Operator, Inc.
Description: Filing of Midwest Independent Transmission System Operator, Inc.
Filed Date: 2/16/12.
Accession Number: 20120216–5214.
Comments Due: 5 p.m. ET 3/8/12.

Take notice that the Commission received the following electric securities filings:

Docket Numbers: ES12–12–000.
Applicants: Prairie Wind Transmission, LLC.
Description: Second Amendment to Application of Prairie Wind Transmission, LLC.
Filed Date: 2/16/12.
Accession Number: 20120216–5213.
Comments Due: 5 p.m. ET 2/27/12.

The filings are accessible in the Commission's eLibrary system by clicking on the links or querying the docket number.

Any person desiring to intervene or protest in any of the above proceedings must file in accordance with Rules 211 and 214 of the Commission's Regulations (18 CFR 385.211 and 385.214) on or before 5 p.m. Eastern time on the specified comment date. Protests may be considered, but intervention is necessary to become a party to the proceeding.

eFiling is encouraged. More detailed information relating to filing requirements, interventions, protests, service, and qualifying facilities filings can be found at: *http://www.ferc.gov/docs-filing/efiling/filing-req.pdf.* For other information, call (866) 208–3676 (toll free). For TTY, call (202) 502–8659.

Dated: February 17, 2012.

Nathaniel J. Davis, Sr.,

Deputy Secretary.

[FR Doc. 2012–4434 Filed 2–24–12; 8:45 am]

BILLING CODE 6717–01–P

DEPARTMENT OF ENERGY

Federal Energy Regulatory Commission

[Project No. 1992–003—California]

Ken Willis; Notice of Availability of Environmental Assessment

In accordance with the National Environmental Policy Act of 1969 and the Federal Energy Regulatory Commission's regulations, 18 CFR part 380 (Order No. 486, 52 FR 47897), the Office of Energy Projects has reviewed the application for a new license for the Fire Mountain Lodge Hydroelectric Project, located on Fern Spring, near the town of Mill Creek in Tehama County, California, and has prepared an environmental assessment (EA). In the EA, Commission staff analyze the potential environmental effects of the proposed project and conclude that issuing a new license for the proposed project, with appropriate environmental measures, would not constitute a major federal action significantly affecting the quality of the human environment.

A copy of the EA is on file with the Commission and is available for public inspection. The EA may also be viewed on the Commission's Web site at *http://www.ferc.gov* using the ''eLibrary'' link. Enter the docket number excluding the last three digits in the docket number field to access the document. For assistance, contact FERC Online Support at *FERCOnlineSupport@ferc.gov* or toll-free at (866) 208–3676, or for TTY, (202) 502–8659.

You may also register online at *http://www.ferc.gov/esubscribenow.htm* to be notified via email of new filings and issuances related to this or other pending projects. For assistance, contact FERC Online Support at *FERCOnlineSupport@ferc.gov* or toll-free at 1–866–208–3676, or for TTY, (202) 502–8659.

Please contact Matt Buhyoff by telephone at (202) 502–6824 or by email at *matt.buhyoff@ferc.gov* if you have any questions.

Dated: February 16, 2012.

Kimberly D. Bose,

Secretary.

[FR Doc. 2012–4410 Filed 2–24–12; 8:45 am]

BILLING CODE 6717–01–P

DEPARTMENT OF ENERGY

Federal Energy Regulatory Commission

[Docket No. CP12–51–000]

Bluewater Gas Storage, LLC; Notice of Intent To Prepare an Environmental Assessment for the Proposed St. Clair River Crossing Replacement Project, Request for Comments on Environmental Issues, and Notice of Onsite Environmental Review

The staff of the Federal Energy Regulatory Commission (FERC or Commission) will prepare an environmental assessment (EA) that will discuss the environmental impacts of the Bluewater Gas Storage, LLC (Bluewater) St. Clair River Crossing Replacement Project (Project) involving the construction of the United States portion of the U.S.-Canada cross-border pipeline facilities from St. Clair County, Michigan to the international boundary within the St. Clair River for the import-export of up to 300 million cubic feet per day (MMCf/d) of natural gas. This EA will be used by the Commission in its decision-making process to determine whether the project is in the public convenience and necessity.

This notice announces the opening of the scoping process the Commission will use to gather input from the public and interested agencies on the Project. Your input will help the Commission staff determine what issues need to be evaluated in the EA. Please note that the project scoping period will close on March 17, 2012. Further details on how to submit written comments are provided in the Public Participation section of this notice.

The office of Energy Projects staff will conduct an onsite environmental review of the project area to gather data for its environmental analysis of the proposed project. Viewing of the project area is anticipated to be from Bluewater's property along River Road. Those attending should meet at the following location and time: FERC Onsite Environmental Review, St. Clair River Crossing Replacement Project, *February 28, 2012 at 9 a.m. Eastern Time,* 1060 River Road, Marysville, Michigan 48040–1510.

This notice is being sent to the Commission's current environmental mailing list for this project as described under the Environmental Mailing List Section of this notice. The notice is also being sent to those landowners outside of the immediate construction work areas who could potentially be affected during construction from secondary, short-term construction-related noise and/or visual impacts. State and local government representatives are asked to notify their constituents of this proposed project and encourage them to comment on their areas of concern.

If you are a landowner receiving this notice, and you are contacted by a representative of Bluewater about the acquisition of an easement to construct, operate, and maintain the proposed facilities, please note that the company would seek to negotiate a mutually acceptable agreement. However, if the project is approved by the Commission, that approval conveys with it the right of eminent domain. Therefore, if easement negotiations fail to produce an agreement, the company could initiate condemnation proceedings where compensation would be determined in accordance with state law.

A fact sheet prepared by the FERC entitled ''An Interstate Natural Gas Facility On My Land? What Do I Need To Know?'' was attached to the project notice Bluewater provided to landowners. This fact sheet addresses a number of typically-asked questions, including the use of eminent domain and how to participate in the Commission's proceedings. It is also available for viewing on the FERC Web site (*www.ferc.gov*).

Summary of the Proposed Project

Bluewater proposes to construct and operate a new natural gas pipeline directionally drilled underneath the St. Clair River from Bluewater's header system in St. Clair County, Michigan to the International Border. The proposed Project would consist of:

- The construction and operation of approximately 1,500 feet of 20-inch-diameter pipeline directionally drilled underneath the St. Clair River to the international border (Cross Border Facilities) within the St. Clair River and construction of approximately 345 feet of 20-inch-diameter replacement pipeline facilities [1] to connect the Cross-Border Facilities to Bluewater's existing 30-mile, 20-inch-diameter pipeline header system in Marysville, St. Clair County, Michigan;
- A Presidential Permit authorizing Bluewater to install, construct, own, operate and maintain the U.S. portion of the cross-border facilities, pursuant to Part 153, Subpart C of the Commission's regulations, and Executive Order No. 10,485, as amended by Executive Order No. 12,038;
- Vacating an existing Section 3 Authorization and Presidential Permit with respect to leased facilities with Nova Chemicals;
- Remove approximately 245 feet of 20-inch-diameter pipeline and 30 feet of 12-inch-diameter pipeline; [2] and
- Modify an existing meter station to increase its measurement capacity.[2]

The general location of the Project facilities is shown in appendix 1.

Land Requirements for Construction

Construction of the Project pipeline facilities would be conducted by the horizontal directional drilling method (HDD) from a location approximately 425 feet on the U.S. inland side of the St. Clair River (entry point) to the U.S.-Canada international border within the river (Appendix 1). The Project would permanently disturb about 0.95 acres of land.

The EA Process

The National Environmental Policy Act (NEPA) requires the Commission to take into account the environmental impacts that could result from an action whenever it considers the issuance of a Certificate of Public Convenience and Necessity. NEPA also requires us [3] to discover and address concerns the public may have about proposals. This process is referred to as ''scoping.'' The main goal of the scoping process is to focus the analysis in the EA on the important environmental issues. By this notice, the Commission requests public comments on the scope of the issues to address in the EA. All comments received will be considered during the preparation of the EA.

In the EA we will discuss impacts that could occur as a result of the construction and operation of the proposed project under these general headings:

- Geology and soils;
- Land use;
- Water resources, fisheries, and wetlands;
- Cultural resources;
- Vegetation and wildlife;
- Air quality and noise;
- Endangered and threatened species; and
- Public safety.

We will also evaluate reasonable alternatives to the proposed project or portions of the project, and make recommendations on how to lessen or avoid impacts on the various resource areas.

Our independent analysis of the issues will be presented in the EA. The

[1] Requested under Bluewater's existing National Gas Act Section 7 Blanket Certificate.

[2] Ibid.

[3] ''We,'' ''us,'' and ''our'' refer to the environmental staff of the Commission's Office of Energy Projects.

EA will be placed in the public record and, depending on the comments received during the scoping process, may be published and distributed to the public. A comment period will be allotted if the EA is published for review. We will consider all comments on the EA before we make our recommendations to the Commission. To ensure your comments are considered, please carefully follow the instructions in the Public Participation section of this notice.

With this notice, we are asking agencies with jurisdiction and/or special expertise with respect to environmental issues to formally cooperate with us in the preparation of the EA. These agencies may choose to participate once they have evaluated the proposal relative to their responsibilities. Agencies that would like to request cooperating agency status should follow the instructions for filing comments provided under the Public Participation section of this notice.

Consultations Under Section 106 of the Natural Historic Preservation Act

In accordance with the Advisory Council on Historic Preservation's implementing regulations for section 106 of the Natural Historic Preservation Act, we are using this notice to initiate consultation with applicable State Historic Preservation Office(s) (SHPO), and to solicit their views and those of other government agencies, interested Indian tribes, and the public on the project's potential effects on historic properties.[4] We will define the project-specific Area of Potential Effects (APE) in consultation with the SHPO(s) as the project is further developed. On natural gas facility projects, the APE at a minimum encompasses all areas subject to ground disturbance (examples include construction right-of-way, contractor/pipe storage yards, compressor stations, and access roads). Our EA would document our findings on the potential project impacts on historic properties and summarize the status of consultations under section 106.

Public Participation

You can make a difference by providing us with your specific comments or concerns about the project. Your comments should focus on the potential environmental effects, reasonable alternatives, and measures to avoid or lessen environmental impacts. The more specific your comments, the more useful they will be. To ensure that your comments are timely and properly recorded, please send your comments so that they will be received in Washington, DC on or before March 17, 2012.

For your convenience, there are three methods which you can use to submit your comments to the Commission. In all instances please reference the project docket number (CP12–51–000) with your submission. The Commission encourages electronic filing of comments and has expert eFiling staff available to assist you at (202) 502–8258 or *efiling@ferc.gov.*

(1) You may file your comments electronically by using the eComment feature, which is located on the Commission's Web site at *www.ferc.gov* under the link to Documents and Filings. An eComment is an easy method for interested persons to submit brief, text-only comments on a project;

(2) You may file your comments electronically by using the eFiling feature, which is located on the Commission's Web site at *www.ferc.gov* under the link to Documents and Filings. With eFiling, you can provide comments in a variety of formats by attaching them as a file with your submission. New eFiling users must first create an account by clicking on ''eRegister.'' You will be asked to select the type of filing you are making. A comment on a particular project is considered a ''Comment on a Filing''; or

(3) You may file a paper copy of your comments at the following address: Kimberly D. Bose, Secretary, Federal Energy Regulatory Commission, 888 First Street NE., Room 1A, Washington, DC 20426.

Environmental Mailing List

The environmental mailing list includes federal, state, and local government representatives and agencies; elected officials; Native American Tribes; environmental and public interest groups; other interested parties; and local libraries and newspapers. This list also includes all affected landowners (as defined in the Commission's regulations) who are potential right-of-way grantors, whose property may be used temporarily for project purposes, or who own homes within certain distances of aboveground facilities, and anyone who submits comments on the project. In this notice we have also included landowners that could be inadvertently affected by construction noise or visual impacts. We will update the environmental mailing list as the analysis proceeds to ensure that we send the information related to this environmental review to all individuals, organizations, and government entities interested in and/or potentially affected by the proposed project.

If the EA is published for distribution, copies will be sent to the environmental mailing list for public review and comment. If you would prefer to receive a paper copy of the document instead of the CD version or would like to remove your name from the mailing list, please return the attached Information Request (appendix 2).

Becoming an Intervenor

In addition to involvement in the EA scoping process, you may want to become an ''intervenor'' which is an official party to the Commission's proceeding. Intervenors play a more formal role in the process and are able to file briefs, appear at hearings, and be heard by the courts if they choose to appeal the Commission's final ruling. An intervenor formally participates in the proceeding by filing a request to intervene. Instructions for becoming an intervenor are included in the User's Guide under the ''e-filing'' link on the Commission's Web site.

Additional Information

Additional information about the project is available from the Commission's Office of External Affairs, at (866) 208–FERC, or on the FERC Web site at *www.ferc.gov* using the ''eLibrary'' link. Click on the eLibrary link, click on ''General Search'' and enter the docket number, excluding the last three digits in the Docket number field (*i.e.,* CP12–51). Be sure you have selected an appropriate date range. For assistance, please contact FERC Online Support at *FercOnlineSupport@ferc.gov* or toll free at (866) 208–3676, or for TTY, contact (202) 502–8659. The eLibrary link also provides access to the texts of formal documents issued by the Commission, such as orders, notices, and rulemakings.

In addition, the Commission now offers a free service called eSubscription which allows you to keep track of all formal issuances and submittals in specific dockets. This can reduce the amount of time you spend researching proceedings by automatically providing you with notification of these filings, document summaries, and direct links to the documents. Go to *www.ferc.gov/esubscribenow.htm.*

Finally, public meetings or site visits will be posted on the Commission's calendar located at *www.ferc.gov/*

[4] The Advisory Council on Historic Preservation's regulations are at Title 36, Code of Federal Regulations, Part 800. Historic properties are defined in those regulations as any prehistoric or historic district, site, building, structure, or object included in or eligible for inclusion in the Natural Register of Historic Places.

EventCalendar/EventsList.aspx along with other related information.

Dated: February 16, 2012.

Kimberly D. Bose,

Secretary.

[FR Doc. 2012–4405 Filed 2–24–12; 8:45 am]

BILLING CODE 6717–01–P

DEPARTMENT OF ENERGY

Federal Energy Regulatory Commission

[Docket No. EL12–27–000]

Louisville Gas and Electric Company; Kentucky Utilities Company; Notice of Petition for Declaratory Order

Take notice that on February 14, 2012, pursuant to Rule 207 of the Federal Energy Regulatory Commission's (Commission) Rules of Practice and Procedure, 18 CFR 385.207, Louisville Gas and Electric Company and Kentucky Utilities Company, filed a Petition for Declaratory Order, requesting that the Commission find that the payment of dividends from equity accounts that represent adjusted retained earnings will not violate section 305(a) of the Federal Power Act, 16 U.S.C. 825d.

Any person desiring to intervene or to protest this filing must file in accordance with Rules 211 and 214 of the Commission's Rules of Practice and Procedure (18 CFR 385.211, 385.214). Protests will be considered by the Commission in determining the appropriate action to be taken, but will not serve to make protestants parties to the proceeding. Any person wishing to become a party must file a notice of intervention or motion to intervene, as appropriate. Such notices, motions, or protests must be filed on or before the comment date. On or before the comment date, it is not necessary to serve motions to intervene or protests on persons other than the Applicant.

The Commission encourages electronic submission of protests and interventions in lieu of paper using the ''eFiling'' link at *http://www.ferc.gov.* Persons unable to file electronically should submit an original and 14 copies of the protest or intervention to the Federal Energy Regulatory Commission, 888 First Street NE., Washington, DC 20426.

This filing is accessible on-line at *http://www.ferc.gov,* using the ''eLibrary'' link and is available for review in the Commission's Public Reference Room in Washington, DC. There is an ''eSubscription'' link on the Web site that enables subscribers to receive email notification when a document is added to a subscribed docket(s). For assistance with any FERC Online service, please email *FERCOnlineSupport@ferc.gov,* or call (866) 208–3676 (toll free). For TTY, call (202) 502–8659.

Comment Date: 5 p.m. Eastern Time on March 15, 2012.

Dated: February 16, 2012.

Kimberly D. Bose,

Secretary.

[FR Doc. 2012–4407 Filed 2–24–12; 8:45 am]

BILLING CODE 6717–01–P

DEPARTMENT OF ENERGY

Federal Energy Regulatory Commission

[Project No. 14356–000]

Nushagak Electric and Telephone Cooperative, Inc.; Notice of Preliminary Permit Application Accepted for Filing and Soliciting Comments, Motions To Intervene, and Competing Applications

On January 25, 2012, the Nushagak Electric and Telephone Cooperative, Inc. filed an application for a preliminary permit, pursuant to section 4(f) of the Federal Power Act (FPA), proposing to study the feasibility of the Dillingham Area Hydroelectric Project (Dillingham Project or project) to be located on Elva Creek and Grant River, near the town of Dillingham, Bristol Bay Borough, Alaska. The sole purpose of a preliminary permit, if issued, is to grant the permit holder priority to file a license application during the permit term. A preliminary permit does not authorize the permit holder to perform any land-disturbing activities or otherwise enter upon lands or waters owned by others without the owners' express permission.

The proposed project has two developments. The total installed capacity of both developments would be 3.2 megawatts (MW) and the total estimated annual generation of the Dillingham Project would be 20.057 gigawatt-hours (GWh).

Lake Elva Development

The proposed project would consist of the following: (1) A 50-foot-long, 10-foot-high rock-fill diversion dam constructed on the outlet of Lake Elva; (2) a 4,100-foot-long, 4-foot-diameter lake tap pipeline; (3) a 3,200-foot-long, 3- to 3.5-foot-diameter penstock leading from the lake tap pipeline to the powerhouse; (4) a powerhouse containing two 0.75–MW Francis turbine/generator units; (5) a 40-foot-long, 20-foot-wide tailrace discharging flows from the powerhouse into Elva Creek; (6) a 49-mile-long, 34.5-kilovolt (kV) transmission line extending from the project powerhouse to a new substation approximately 5 miles north of Dillingham; (7) an approximately 3-mile-long access road; and (8) appurtenant facilities. The estimated annual generation of the Lake Elva development would be 7.927 GWh.

Grant Lake Development

The proposed project would consist of the following: (1) A 900-foot-long, 20-foot-high rock-fill diversion dam constructed on the outlet of Grant Lake (main dam); (2) a 1-mile-long, 20-foot-high diversion canal excavated approximately 1 mile north of the main dam; (3) a 300-foot-long, 20-foot-high rock-fill diversion dam constructed at the terminus of the diversion canal; (4) an intake structure on the diversion dam leading to a 5,000-foot-long, 5-foot-diameter pipeline; (5) a 3,100-foot-long, 4-foot-diameter penstock leading from the pipeline to the powerhouse; (6) a powerhouse containing a 1.7–MW Turgo turbine/generator unit; (7) a 40-foot-long, 20-foot-wide tailrace discharging flows from the powerhouse into Grant River; (8) a 46-mile-long, 34.5-kV transmission line extending from the project powerhouse to a new substation approximately 5 miles north of Dillingham; (9) an approximately 2.5-mile-long access road; and (10) appurtenant facilities. The estimated annual generation of the Grant Lake development would be 12.13 GWh.

Applicant Contact: Mr. Mike Megli, CEO/General Manager, Nushagak Electric & Telephone Cooperative, Inc., 557 Kenny Wren Road, P.O. Box 350, Dillingham, AK 99576; phone: (907) 842–6315.

FERC Contact: Jennifer Harper; phone: (202) 502–6136.

Deadline for filing comments, motions to intervene, competing applications (without notices of intent), or notices of intent to file competing applications: 60 days from the issuance of this notice. Competing applications and notices of intent must meet the requirements of 18 CFR 4.36. Comments, motions to intervene, notices of intent, and competing applications may be filed electronically via the Internet. See 18 CFR 385.2001(a)(1)(iii) and the instructions on the Commission's Web site *http://www.ferc.gov/docs-filing/efiling.asp.* Commenters can submit brief comments up to 6,000 characters, without prior registration, using the eComment system at *http://www.ferc.gov/docs-filing/ecomment.asp.* You must include your name and contact

information at the end of your comments. For assistance, please contact FERC Online Support at *FERCOnlineSupport@ferc.gov* or toll free at 1–866–208–3676, or for TTY, (202) 502–8659. Although the Commission strongly encourages electronic filing, documents may also be paper-filed. To paper-file, mail an original and seven copies to: Kimberly D. Bose, Secretary, Federal Energy Regulatory Commission, 888 First Street NE., Washington, DC 20426.

More information about this project, including a copy of the application, can be viewed or printed on the ''eLibrary'' link of Commission's Web site at *http://www.ferc.gov/docs-filing/elibrary.asp.* Enter the docket number (P–14356) in the docket number field to access the document. For assistance, contact FERC Online Support.

Dated: February 16, 2012.

Kimberly D. Bose,

Secretary.

[FR Doc. 2012–4404 Filed 2–24–12; 8:45 am]

BILLING CODE 6717–01–P

DEPARTMENT OF ENERGY

Federal Energy Regulatory Commission

[Project Nos. 14130–000, 14137–000, 14134–000]

Riverbank Hydro No. 2, LLC, Lock+ Hydro Friends Fund XXXVI, Qualified Hydro 21, LLC; Notice Announcing Preliminary Permit Drawing

The Commission has received three preliminary permit applications deemed filed on April 1, 2011, at 8:30 a.m.,[1] for proposed projects to be located on the Arkansas River, in Lincoln County and Jefferson County, Arkansas. The applications were filed by Riverbank Hydro No. 2, LLC for Project No. 14130–000, Lock+ Hydro Friends Fund XXXVI for Project No. 14137–000, and Qualified Hydro 21, LLC for Project No. 14134–000.

On February 28, 2012, at 9 a.m. (Eastern Time), the Secretary of the Commission, or her designee, will conduct a random drawing to determine the filing priority of the applicants identified in this notice. The Commission will select among competing permit applications as provided in section 4.37 of its regulations.[2] The priority established by this drawing will be used to determine which applicant, among those with identical filing times, will be considered to have the first-filed application.

The drawing is open to the public and will be held in room 2C, the Commission Meeting Room, located at 888 First St. NE., Washington, DC 20426. A subsequent notice will be issued by the Secretary announcing the results of the drawing.

Dated: February 21, 2012.

Nathaniel J. Davis, Sr.,

Deputy Secretary.

[FR Doc. 2012–4433 Filed 2–24–12; 8:45 am]

BILLING CODE 6717–01–P

[1] Under the Commission's Rules of Practice and Procedure, any document received after regular business hours is considered filed at 8:30 a.m. on the next regular business day. 18 CFR 385.2001(a)(2) (2011).

[2] 18 CFR 4.37 (2011).

DEPARTMENT OF ENERGY

Federal Energy Regulatory Commission

[Docket No. EL10–3–001]

Citizens Sunrise Transmission LLC; Citizens Energy Corporation; Notice of Initiation of Proceeding and Refund Effective Date

On February 21, 2012, the Commission issued an order that initiated a proceeding in Docket No. EL10–3–001, pursuant to section 206 of the Federal Power Act (FPA), 16 U.S.C. 824e (2006), to determine the justness and reasonableness of the rates proposed by Citizens Sunrise. *Citizens Sunrise Transmission LLC and Citizens Energy Corporation,* 138 FERC ¶ 61,129 (2012).

The refund effective date in Docket No. EL10–3–001, established pursuant to section 206(b) of the FPA, will be the date of publication of this notice in the **Federal Register**.

Dated: February 21, 2012.

Nathaniel J. Davis, Sr.,

Deputy Secretary

[FR Doc. 2012–4436 Filed 2–24–12; 8:45 am]

BILLING CODE 6717–01–P

DEPARTMENT OF ENERGY

Federal Energy Regulatory Commission

[Docket No. CP12–58–000]

Port Barre Investments, L.L.C. (d/b/a Bobcat Gas Storage); Notice of Request Under Blanket Authorization

Take notice that on February 6, 2012 Bobcat Gas Storage (Bobcat), 5400 Westheimer Court, Houston, Texas 77056, filed in the above Docket, a prior notice request pursuant to sections 157.205, and 157.208 of the Commission's regulations under the Natural Gas Act (NGA), for authorization to increase the certificated operating pressure on five supply and delivery laterals, four of which are existing and one that is yet to be constructed, from 1,170 psig to 1,320 psig, located at its natural gas storage facility in St. Landry Parish, Louisiana, all as more fully set forth in the application which is on file with the Commission and open to public inspection. The filing may also be viewed on the Web at *http://www.ferc.gov* using the ''eLibrary'' link. Enter the docket number excluding the last three digits in the docket number field to access the document. For assistance, please contact FERC Online Support at *FERCOnlineSupport@ferc.gov* or toll free at (866) 208–3676, or TTY, contact (202) 502–8659.

Any questions concerning this application may be directed to Lisa A. Connolly, General Manager, Rates & Certificates, Bobcat Gas Storage, P.O. Box 1642, Houston, Texas 77251–1642 at (713) 627–4102.

Any person may, within 60 days after the issuance of the instant notice by the Commission, file pursuant to Rule 214 of the Commission's Procedural Rules (18 CFR 385.214) a motion to intervene or notice of intervention. Any person filing to intervene or the Commission's staff may, pursuant to section 157.205 of the Commission's Regulations under the Natural Gas Act (NGA) (18 CFR 157.205) file a protest to the request. If no protest is filed within the time allowed therefore, the proposed activity shall be deemed to be authorized effective the day after the time allowed for protest. If a protest is filed and not withdrawn within 30 days after the time allowed for filing a protest, the instant request shall be treated as an application for authorization pursuant to section 7 of the NGA.

The Commission strongly encourages electronic filings of comments, protests, and interventions via the internet in lieu of paper. See 18 CFR 385.2001(a)(1)(iii) and the instructions on the Commission's Web site (*www.ferc.gov*) under the ''e-Filing'' link.

Dated: February 16, 2012.

Kimberly D. Bose,

Secretary.

[FR Doc. 2012–4413 Filed 2–24–12; 8:45 am]

BILLING CODE 6717–01–P

DEPARTMENT OF ENERGY

Federal Energy Regulatory Commission

[Docket Nos. ER02–2001–017, Docket No. ER07–491–000, et al.]

Electric Quarterly Reports, Acacia Energy, Inc., et al.; Notice of Revocation of Market-Based Rate Tariff

Electric Quarterly Reports	Docket No. ER02–2001–017
Acacia Energy, Inc	Docket No. ER07–491–000
LBPC Power, Inc	Docket No. ER07–155–000
Nordic Energy, L.L.C	Docket No. ER01–2311–000
Nordic Marketing of Illinois, L.L.C	Docket No. ER03–888–000
Nordic Marketing of Michigan, L.L.C	Docket No. ER04–264–000
Nordic Marketing, L.L.C	Docket No. ER00–774–000
Pirin Solutions, Inc	Docket No. ER07–594–000
Tennessee Power Company	Docket No. ER95–581–000

On January 31, 2012, the Commission issued an order announcing its intent to revoke the market-based rate authority of the above captioned public utilities, which had failed to file their required Electric Quarterly Reports.[1] The Commission provided the utilities fifteen days in which to file their overdue Electric Quarterly Reports or face revocation of their market-based rate tariffs.

In Order No. 2001, the Commission revised its public utility filing requirements and established a requirement for public utilities, including power marketers, to file Electric Quarterly Reports summarizing the contractual terms and conditions in their agreements for all jurisdictional services (including market-based power sales, cost-based power sales, and transmission service) and providing transaction information (including rates) for short-term and long-term power sales during the most recent calendar quarter.[2]

In the January 31 Order, the Commission directed Acacia Energy, Inc.; LBPC Power, Inc.; Nordic Energy, L.L.C.; Nordic Marketing of Illinois, L.L.C.; Nordic Marketing of Michigan, L.L.C.; Nordic Marketing, L.L.C.; Pirin Solutions, Inc.; and Tennessee Power Company to file the required Electric Quarterly Reports within 15 days of the date of issuance of the order or face revocation of their authority to sell power at market-based rates and termination of their electric market-based rate tariffs.[3]

The time period for compliance with the January 31 Order has elapsed. The eight companies identified in the January 31 Order (Acacia Energy, Inc.; LBPC Power, Inc.; Nordic Energy, L.L.C.; Nordic Marketing of Illinois, L.L.C.; Nordic Marketing of Michigan, L.L.C.; Nordic Marketing, L.L.C.; Pirin Solutions, Inc.; and Tennessee Power Company) have failed to file their delinquent Electric Quarterly Reports.

The Commission hereby revokes the market-based rate authority and terminates the electric market-based rate tariffs of the above-captioned public utilities.

Dated: February 16, 2012.

Kimberly D. Bose,

Secretary.

[FR Doc. 2012–4408 Filed 2–24–12; 8:45 am]

BILLING CODE 6717–01–P

[1] *Electric Quarterly Reports,* 138 FERC ¶ 61,071 (2012) (January 31 Order).

[2] *Revised Public Utility Filing Requirements,* Order No. 2001, 67 FR 31,043, FERC Stats. & Regs. ¶ 31,127, *reh'g denied,* Order No. 2001–A, 100 FERC ¶ 61,074, *reconsideration and clarification denied,* Order No. 2001–B, 100 FERC ¶ 61,342, *order directing filings,* Order No. 2001–C, 101 FERC ¶ 61,314 (2002), *order directing filing,* Order No. 2001–D, 102 FERC ¶ 61,334 (2003).

[3] January 31 Order at Ordering Paragraph A.

DEPARTMENT OF ENERGY

Federal Energy Regulatory Commission

Notice of Commission Staff Attendance

The Federal Energy Regulatory Commission (Commission) hereby gives notice that members of the Commission's staff may attend the following meeting related to the transmission planning activities of the Midwest Independent Transmission System Operator, Inc. (MISO):

Order 1000—Right of First Refusal Task Team (ROFR)

The above-referenced meeting will be held at: MISO Headquarters, 720 City Center Drive, Carmel, IN 46032.

The above-referenced meeting is open to the public.

Further information may be found at *www.misoenergy.org.*

The discussions at the meeting described above may address matters at issue in the following proceedings:

Docket No. ER12–715, *Midwest Independent Transmission System Operator, Inc.*

Docket No. ER12–480, *Midwest Independent Transmission System Operator, Inc.*

Docket No. ER11–1844, *Midwest Independent Transmission System Operator, Inc.*

Docket No. EL11–56, *FirstEnergy Service Company*

Docket No. EL11–30, *E.ON Climate & Renewables North America, LLC v. Midwest Independent Transmission System Operator, Inc.*

Docket No. OA08–53, *Midwest Independent Transmission System Operator, Inc.*

For more information, contact Christopher Miller, Office of Energy Markets Regulation, Federal Energy Regulatory Commission at (317) 249–5936 or *christopher.miller@ferc.gov.*

Dated: February 17, 2012.

Kimberly D. Bose,

Secretary.

[FR Doc. 2012–4415 Filed 2–24–12; 8:45 am]

BILLING CODE 6717–01–P

DEPARTMENT OF ENERGY

Federal Energy Regulatory Commission

Notice of Attendance at ISO New England and NEPOOL Meetings

The Federal Energy Regulatory Commission (Commission) hereby gives notice that members of the Commission and Commission staff may attend upcoming ISO New England Inc. (ISO–NE) and New England Power Pool (NEPOOL) meetings, as well as other subcommittee or working group meetings.[1] The Commission and Commission staff may attend the following meetings:

NEPOOL Participants Committee

- March 9, 2012 (Location TBD)
- April 13, 2012 (Location TBD)
- May 4, 2012 (Location TBD)
- June 1, 2012 (Location TBD)
- June 26–28, 2012 (Newport, RI)
- August 3, 2012 (Location TBD)
- September 14, 2012 (Location TBD)
- October 12, 2012 (Location TBD)
- November 2, 2012 (Location TBD)
- December 7, 2012 (Location TBD)

NEPOOL Markets Committee

- March 6–7, 2012 (Westborough, MA)
- April 10–11, 2012 (Westborough, MA)
- May 9–10, 2012 (Westborough, MA)
- June 12–13, 2012 (Milford, MA)
- July 11–13, 2012 (Location TBD)
- August 7–8, 2012 (Westborough, MA)
- September 11–12, 2012 (Westborough, MA)
- October 10–11, 2012 (Westborough, MA)
- November 7–8, 2012 (Marlborough, MA)
- December 11–12, 2012 (Westborough, MA)

NEPOOL Transmission Committee

- February 28, 2012 (Westborough, MA)
- March 20, 2012 (Westborough, MA)
- April 24, 2012 (Westborough, MA)
- May 24, 2012 (Westborough, MA)
- June 21, 2012 (Westborough, MA)
- July 24, 2012 (Westborough, MA)
- August 13–15, 2012 (Location TBD)
- September 25, 2012 (Marlborough, MA)
- October 23, 2012 (Westborough, MA)
- November 29, 2012 (Westborough, MA)

NEPOOL Reliability Committee

- March 13, 2012 (Westborough, MA)
- April 17, 2012 (Westborough, MA)
- May 15, 2012 (Westborough, MA)
- June 20, 2012 (Westborough, MA)
- July 17, 2012 (Westborough, MA)
- August 13–15, 2012 (Location TBD)
- September 19, 2012 (Westborough, MA)
- October 16, 2012 (Westborough, MA)
- November 13, 2012 (Westborough, MA)
- December 18, 2012 (Westborough, MA)

Planning Advisory Committee

- March 14, 2012 (Milford, MA)
- March 15, 2012 (Framingham, MA)
- April 18–19, 2012 (Westborough, MA)
- May 16–17, 2012 (Westborough, MA)
- June 18–19, 2012 (Westborough, MA)
- July 18–19, 2012 (Westborough, MA)
- August 9, 2012 (Westborough, MA)
- September 20, 2012 (Westborough, MA)
- October 17–18, 2012 (Westborough, MA)
- November 14–15, 2012 (Marlborough, MA)
- December 13, 2012 (Westborough, MA)

Demand Resources Working Group

- March 8, 2012 (Holyoke, MA)
- April 4, 2012 (Holyoke, MA)
- May 2, 2012 (Holyoke, MA)
- June 6, 2012 (Holyoke, MA)
- August 1, 2012 (Holyoke, MA)
- September 5, 2012 (Holyoke, MA)
- October 3, 2012 (Holyoke, MA)
- November 7, 2012 (Holyoke, MA)
- December 5, 2012 (Holyoke, MA)

Budget & Finance Subcommittee

- March 28, 2012 (Conference Call)
- April 12, 2012 (Conference Call)
- May 14, 2012 (Conference Call)
- August 13, 2012 (Conference Call)
- August 24, 2012 (Conference Call)
- October 25, 2012 (Conference Call)
- November 19, 2012 (Conference Call)

For additional information, see: *http://www.iso-ne.com/committees/comm_wkgrps/index.html.*

The discussions at each of the meetings described above may address matters at issue in pending proceedings before the Commission, including the following currently pending proceedings:

Docket Nos. ER10–787, EL10–50, and EL10–57, *ISO New England Inc. and the New England Power Pool Participants Committee.*

Docket No. ER11–2216, *ISO New England Inc. and the Participating Transmission Owners Administrative Committee.*

Docket No. ER11–2580, *ISO New England Inc.*

Docket No. ER11–3953, *ISO New England Inc. and the New England Power Pool Participants Committee.*

Docket No. ER11–4336, *ISO New England Inc.*

Docket No. ER12–729, *ISO New England Inc. and the New England Power Pool Participants Committee.*

Docket No. ER12–757, *ISO New England Inc.*

Docket No. ER12–953, *ISO New England Inc. and the New England Power Pool Participants Committee.*

Docket No. ER12–991, *ISO New England Inc.*

For more information, contact Kristen Fleet, Office of Energy Market Regulation, Federal Energy Regulatory Commission at (202) 502–8063 or *Kristen.Fleet@ferc.gov.*

Dated: February 16, 2012.

Kimberly D. Bose,

Secretary.

[FR Doc. 2012–4409 Filed 2–24–12; 8:45 am]

BILLING CODE 6717–01–P

[1] Subcommittees, task forces, and working groups meet on a variety of topics; they convene and dissolve on an as-needed basis. Therefore, the Commission and Commission staff may monitor the various meetings posted on the ISO–NE Web site.

DEPARTMENT OF ENERGY

Federal Energy Regulatory Commission

[Project No. 3984–004]

Algonquin Power Company; Abenaki Timber Corporation; Notice of Transfer of Exemption

1. By letter filed February 7, 2012, Algonquin Power Company informed the Commission that its exemption from licensing for the South Milton Project No. 3984, originally issued January 30, 1981,[1] has been transferred to Abenaki Timber Corporation. The project is located on the South Milton River in Stafford County, New Hampshire. The transfer of an exemption does not require Commission approval.

2. Abenaki Timber Corporation, located at 16 Church Street, Kingston, New Hampshire 03848 is now the exemptee of the South Milton Project No. 3984.

Dated: February 16, 2012.

Kimberly D. Bose,

Secretary.

[FR Doc. 2012–4411 Filed 2–24–12; 8:45 am]

BILLING CODE 6717–01–P

[1] 15 FERC ¶ 62,423, Order Granting Exemption From Licensing of a Small Hydroelectric Project of 5 Megawatts or Less and Denying Competing Application for Preliminary Permit.

ENVIRONMENTAL PROTECTION AGENCY

[FRL–9637–6]

Inventory of U.S. Greenhouse Gas Emissions and Sinks: 1990–2010; Notice of Availability and Request for Comments

AGENCY: Environmental Protection Agency (EPA).

ACTION: Notice of document availability and request for comments.

SUMMARY: The Draft Inventory of U.S. Greenhouse Gas Emissions and Sinks: 1990–2010 is available for public review. Annual U.S. emissions for the period of time from 1990 through 2010 are summarized and presented by source category and sector. The inventory contains estimates of carbon dioxide (CO_2), methane (CH_4), nitrous oxide (N_2O), hydrofluorocarbons (HFC), perfluorocarbons (PFC), and sulfur hexafluoride (SF_6) emissions. The inventory also includes estimates of carbon fluxes in U.S. agricultural and forest lands. The technical approach used in this report to estimate emissions and sinks for greenhouse gases is consistent with the methodologies recommended by the Intergovernmental Panel on Climate Change (IPCC), and reported in a format consistent with the United Nations Framework Convention on Climate Change (UNFCCC) reporting guidelines. The Inventory of U.S. Greenhouse Gas Emissions and Sinks: 1990–2010 is the latest in a series of annual U.S. submissions to the Secretariat of the UNFCCC.

DATES: To ensure your comments are considered for the final version of the document, please submit your comments on or before March 28, 2012. However, comments received after that date will still be welcomed and be considered for the next edition of this report.

ADDRESSES: Comments should be submitted to Mr. Leif Hockstad at: Environmental Protection Agency, Climate Change Division (6207J), 1200 Pennsylvania Ave. NW., Washington, DC 20460, Fax: (202) 343–2359. You are welcome and encouraged to send an email with your comments to *hockstad.leif@epa.gov.*

FOR FURTHER INFORMATION CONTACT: Mr. Leif Hockstad, Environmental Protection Agency, Office of Air and Radiation, Office of Atmospheric Programs, Climate Change Division, (202) 343–9432, *hockstad.leif@epa.gov.*

SUPPLEMENTARY INFORMATION: The draft report can be obtained by visiting the U.S. EPA's Climate Change Site at: *http://www.epa.gov/climatechange/emissions/usinventoryreport.html.*

Dated: February 16, 2012.

Gina McCarthy,

Assistant Administrator, Office of Air and Radiation.

[FR Doc. 2012–4477 Filed 2–24–12; 8:45 am]

BILLING CODE 6560–50–P

ENVIRONMENTAL PROTECTION AGENCY

[CERCLA–04–2012–3763; FRL 9637–7]

Anniston PCB Superfund Site, Anniston, Calhoun County, Alabama; Notice of Amended Settlement

AGENCY: Environmental Protection Agency.

ACTION: Notice of Settlement.

SUMMARY: Under the Comprehensive Environmental Response, Compensation and Liability Act (CERCLA), the United States Environmental Protection Agency has entered into a settlement for past response costs concerning the Anniston PCB Superfund Site located in Anniston, Calhoun County, Alabama.

DATES: The Agency will consider public comments on the settlement until March 28, 2012. The Agency will consider all comments received and may modify or withdraw its consent to the settlement if comments received disclose facts or considerations which indicate that the settlement is inappropriate, improper, or inadequate.

ADDRESSES: Copies of the settlement are available from Ms. Paula V. Painter. Submit your comments by Site name Anniston PCB by one of the following methods:

- *www.epa.gov/region4/superfund/programs/enforcement/enforcement.html.*
- *Email. Painter.Paula@epa.gov.*

FOR FURTHER INFORMATION CONTACT: Paula V. Painter at 404/562–8887.

Dated: February 2, 2012.

Anita L. Davis,

Chief, Superfund Enforcement & Information Management Branch, Superfund Division.

[FR Doc. 2012–4482 Filed 2–24–12; 8:45 am]

BILLING CODE 6560–50–P

EXPORT-IMPORT BANK OF THE U.S.

[Public Notice 2012–0082]

Agency Information Collection Activities: Comment Request

AGENCY: Export-Import Bank of the U.S.

ACTION: Submission for OMB Review and Comments Request.

Form Title: EIB 84–01 Joint Application for Export Working Capital Guarantee.

SUMMARY: The Export-Import Bank of the United States (Ex-Im Bank), as a part of its continuing effort to reduce paperwork and respondent burden, invites the general public and other Federal Agencies to comment on the proposed information collection, as required by the Paperwork Reduction Act of 1995. Our customers will be able to submit this form on paper or electronically.

The purpose of this form is a joint application form for working capital loan guarantees provided by Ex-Im Bank and the Small Business Administration. This collection of information is necessary under Section 635(a)(1) to determine eligibility of applicant for Ex-Im Bank assistance or participation. The Small Business Administration is the U.S. Government Agency (created by the Small Business Act, as amended) that aids and assists small businesses to increase their ability to compete in international markets by enhancing their ability to export. This collection of information is necessary under Section 7(a)(14) of the Small Business Act (15 U.S.C. 636(a)(14) to determine eligibility of applicant for SBA assistance or participation.

The application provides Ex-Im Bank and Small Business Administration staff with the information necessary to determine if the application and transaction are eligible for Ex-Im Bank and SBA assistance.

This application can be viewed at *www.exim.gov/pub/pending/EIB84-01.PDF.*

DATES: Comments should be received on or before April 27, 2012 to be assured of consideration.

ADDRESSES: Comments may be submitted through *www.Regulations.Gov* or mailed to Smaro Karakatsanis, Export Import Bank of the United States, 811 Vermont Ave. NW., Washington, DC 20571.

SUPPLEMENTARY INFORMATION:

Titles and Form Number: EIB 84–01 Joint Application for Export Working Capital Guarantee.

OMB Number: 3048–0003.

Type of Review: Regular.

Need and Use: This information will be used to determine if the application and transaction are eligible for Ex-Im Bank and SBA assistance.

Affected Public: This form affects entities involved in the export of U.S. goods and services.

	Ex-Im Bank	SBA
Estimated respondents per year	606	177
Frequency of Responses	once per application for both programs	
Estimated hours per response	2.5 hours	2.5 hours
Estimated annual burden hours	1,515	442.5 (Total = 1,957.5)

The annual cost to respondents would therefore be $68,512.

	Ex-Im Bank	SBA
Reviewing time in hours	2	2
Responses per year	606	177
Review time per year	1,212	354
Average wages per hour	$30.25	$35.00
Average cost per year	$36,333	$12,390
Benefits and Overhead	28%	100%
Total Government Cost	$46,506	$24,780

The annual cost to the Government would be $71,286.

Sharon A. Whitt,

Agency Clearance Officer.

[FR Doc. 2012–4456 Filed 2–24–12; 8:45 am]

BILLING CODE 6690–01–P

FEDERAL ELECTION COMMISSION

Sunshine Act Meeting Notice

DATE & TIME: *Thursday, March 1, 2012 at 10 a.m.*

PLACE: 999 E Street NW., Washington, DC (ninth floor).

STATUS: This meeting will be open to the public.

ITEMS TO BE DISCUSSED:

Correction and Approval of the Minutes for the Meeting of February 16, 2012;

Draft Advisory Opinion 2012–04: Justice Party of Mississippi;

Draft Advisory Opinion 2012–03: ActRight;

Draft Advisory Opinion 2012–01: Stop This Insanity, Inc. Employee Leadership Fund;

Audit Division Recommendation Memorandum on Chris Dodd for President, Inc.;

Management and Administrative Matters.

Individuals who plan to attend and require special assistance, such as sign language interpretation or other reasonable accommodations, should contact Shawn Woodhead Werth, Secretary, at (202) 694–1040, at least 72 hours prior to the meeting date.

PERSON TO CONTACT FOR INFORMATION: Judith Ingram, Press Officer, Telephone: (202) 694–1220.

Shawn Woodhead Werth,

Secretary of the Commission.

[FR Doc. 2012–4715 Filed 2–23–12; 4:15 pm]

BILLING CODE 6715–01–P

FEDERAL RETIREMENT THRIFT INVESTMENT BOARD

Privacy Act of 1974; Systems of Records

AGENCY: Federal Retirement Thrift Investment Board.

ACTION: Notice of revision to existing systems of records.

SUMMARY: The Federal Retirement Thrift Investment Board (Agency) is proposing to revise its Privacy Act Systems of Records to reflect the Agency's new office address.

DATES: The revision will become effective without further notice on March 28, 2012 unless comments received on or before that date result in a contrary determination.

FOR FURTHER INFORMATION CONTACT: Amanda Haas at 202–942–1600.

SUPPLEMENTARY INFORMATION: This notice is in accordance with the Privacy Act requirement that agencies publish their amended systems of records in the **Federal Register** when there is a revision, change, or addition. The Agency has moved its headquarters to a new location in Washington, DC. The revisions to the Agency's systems of records set forth below reflect the Agency's new address.

Gregory T. Long,

Executive Director, Federal Retirement Thrift Investment Board.

FRTIB–1

SYSTEM NAME:

Thrift Savings Plan Records.

FRTIB–2

SYSTEM NAME:

Personnel Security Files.

FRTIB–3

SYSTEM NAME:

EEO Discrimination Complaint File.

FRTIB–4

SYSTEM NAME:

Adverse Information and Action Records, Disciplinary. Records.

FRTIB–5

SYSTEM NAME:

Payroll Records.

FRTIB–6

SYSTEM NAME:

Leave Records.

FRTIB–7

SYSTEM NAME:

Consultant and Staff Associate File.

FRTIB–8

SYSTEM NAME:

Board Members File.

FRTIB–9

SYSTEM NAME:

Organization Management and Locator System.

FRTIB–10

SYSTEM NAME:

Identity Management System (IDMS).

FRTIB–11

SYSTEM NAME:

Financial Disclosure Reports and Outside Business Interest Records.

FRTIB–12

SYSTEM NAME:

Collection Records.

FRTIB–13

SYSTEM NAME:

Fraud and Forgery Records.

FRTIB–1

SYSTEM NAME:

Thrift Savings Plan Records.

SYSTEM MANAGER(S) AND ADDRESS:

[CHANGE TO READ]

Chief Financial Officer, Federal Retirement Thrift Investment Board, 77 K Street NE., Suite 1000, Washington, DC 20002.

* * * * *

FRTIB–2

SYSTEM NAME:

Personnel Security Files.

SYSTEM LOCATION:

[CHANGE TO READ]

Federal Retirement Thrift Investment Board, 77 K Street NE., Suite 1000, Washington, DC 20002.

SYSTEM MANAGERS AND ADDRESS:

[CHANGE TO READ]

The Chief Financial Officer maintains the Agency's electronic background information data and all other records in FRTIB–2. The Chief Financial Officer may be contacted in writing at 77 K Street NE., Suite 1000, Washington, DC 20002.

NOTIFICATION PROCEDURE:

[CHANGE TO READ]

Individuals seeking to determine whether this system of records contains information about themselves should send inquiries to the Chief Financial Officer at Federal Retirement Thrift Investment Board, 77 K Street NE., Suite 1000, Washington, DC 20002. When requesting notification or access to records covered by FRTIB–2, an individual should provide his/her full name, date of birth, Social Security number, and home address in order to establish identity.

* * * * *

FRTIB–3

SYSTEM NAME:

EEO Discrimination Complaint File.

SYSTEM LOCATION:

[CHANGE TO READ]

Federal Retirement Thrift Investment Board, 77 K Street NE., Suite 1000, Washington, DC 20002.

SYSTEM MANAGER(S) AND ADDRESS:

[CHANGE TO READ]

Personnel Officer, Federal Retirement Thrift Investment Board, 77 K Street NE., Suite 1000, Washington, DC 20002.

* * * * *

FRTIB–4

SYSTEM NAME:

Adverse Information and Action Records, Disciplinary Records.

SYSTEM LOCATION:

[CHANGE TO READ]

Federal Retirement Thrift Investment Board, 77 K Street NE., Suite 1000, Washington, DC 20002.

SYSTEM MANAGER(S) AND ADDRESS:

[CHANGE TO READ]

Personnel Officer, Federal Retirement Thrift Investment Board, 77 K Street NE., Suite 1000, Washington, DC 20002.

* * * * *

FRTIB–5

SYSTEM NAME:

Payroll Records.

SYSTEM MANAGER(S) AND ADDRESS:

[CHANGE TO READ]

Personnel Officer, Federal Retirement Thrift Investment Board, 77 K Street NE., Suite 1000, Washington, DC 20002.

* * * * *

FRTIB–6

SYSTEM NAME:

Leave Records.

SYSTEM LOCATION:

[CHANGE TO READ]

Federal Retirement Thrift Investment Board, 77 K Street NE., Suite 1000, Washington, DC 20002.

SYSTEM MANAGER(S) AND ADDRESS:

[CHANGE TO READ]

Personnel Officer, Federal Retirement Thrift Investment Board, 77 K Street NE., Suite 1000, Washington, DC 20002.

* * * * *

FRTIB–7

SYSTEM NAME:

Consultant and Staff Associate File.

SYSTEM LOCATION:

[CHANGE TO READ]

Federal Retirement Thrift Investment Board, 77 K Street NE., Suite 1000, Washington, DC 20002.

SYSTEM MANAGER(S) AND ADDRESS:

[CHANGE TO READ]

Personnel Officer, Federal Retirement Thrift Investment Board, 77 K Street NE., Suite 1000, Washington, DC 20002.

* * * * *

FRTIB–8

SYSTEM NAME:

Board Members File.

SYSTEM LOCATION:

[CHANGE TO READ]

Federal Retirement Thrift Investment Board, 77 K Street NE., Suite 1000, Washington, DC 20002.

SYSTEM MANAGER(S) AND ADDRESS:

[CHANGE TO READ]

Secretary to the Board, Federal Retirement Thrift Investment Board, 77 K Street NE., Suite 1000, Washington, DC 20002.

* * * * *

FRTIB–9

SYSTEM NAME:

Organization Management and Locator System.

SYSTEM LOCATION:

[CHANGE TO READ]

Federal Retirement Thrift Investment Board, 77 K Street NE., Suite 1000, Washington, DC 20002.

SYSTEM MANAGER(S) AND ADDRESS:

[CHANGE TO READ]

Office directors maintain records pertaining to that director's employees or contractor personnel. The Director, Automated Systems, maintains the Agency's electronic emergency notification roster. The Chief Financial Officer maintains all other records in FRTIB–9. Any of these individuals may be contacted in writing at 77 K Street NE., Suite 1000, Washington, DC 20002.

NOTIFICATION PROCEDURE:

[CHANGE TO READ]

Individuals seeking to determine whether this system of records contains information about themselves should address written inquiries to their Office Director; the Director, Automated Systems; or the Chief Financial Officer at Federal Retirement Thrift Investment Board, 77 K Street NE., Suite 1000, Washington, DC 20002. Individuals must supply their full name for their records to be located and identified.

* * * * *

FRTIB–10

SYSTEM NAME:

Identity Management System (IDMS).

SYSTEM LOCATION:

[CHANGE TO READ]

Federal Retirement Thrift Investment Board, 77 K Street NE., Suite 1000, Washington, DC 20002. Some data covered by this system may be at Federal buildings and Federally-leased space where staffed guard-stations have been established in facilities that have installed the Personal Identity Verification (PIV) system, as well as the physical security offices or computer security offices of those locations.

SYSTEM MANAGER(S) AND ADDRESS:

[CHANGE TO READ]

The Chief Financial Officer maintains the Agency's electronic identity data and all other records in FRTIB–10. The Chief Financial Officer may be contacted in writing at 77 K Street NE., Suite 1000, Washington, DC 20002.

NOTIFICATION PROCEDURE:

[CHANGE TO READ]

Individuals seeking to determine whether this system of records contains information about themselves should send inquiries to the Chief Financial Officer at Federal Retirement Thrift Investment Board, 77 K Street NE., Suite 1000, Washington, DC 20002. When requesting notification of or access to records covered by FRTIB–10, an individual should provide his/her full name, date of birth, social security number, and home address in order to establish identity.

* * * * *

FRTIB–11

SYSTEM NAME:

Financial Disclosure Reports and Outside Business Interest Records.

SYSTEM LOCATION:

[CHANGE TO READ]

Federal Retirement Thrift Investment Board, 77 K Street NE., Suite 1000, Washington, DC 20002.

SYSTEM MANAGER(S) AND ADDRESS:

[CHANGE TO READ]

Ethics Officer, Federal Retirement Thrift Investment Board, 77 K Street NE., Suite 1000, Washington, DC 20002.

* * * * *

FRTIB–12

SYSTEM NAME:

Collection Records.

SYSTEM LOCATION:

[CHANGE TO READ]

Federal Retirement Thrift Investment Board, 77 K Street NE., Suite 1000, Washington, DC 20002.

SYSTEM MANAGER(S) AND ADDRESS:

[CHANGE TO READ]

Associate General Counsel, Federal Retirement Thrift Investment Board, 77 K Street NE., Suite 1000, Washington, DC 20002.

NOTIFICATION PROCEDURE:

[CHANGE TO READ]

Inquiries under the Privacy Act of 1974 should be addressed to the Privacy Act Officer, Federal Retirement Thrift Investment Board, 77 K Street NE., Suite 1000, Washington, DC 20002. All individuals making inquiries should provide with their requests as much descriptive matter as is possible to identify the particular record desired. The System Manager will advise as to whether the Board or FMS will process the record request.

* * * * *

FRTIB–13

SYSTEM NAME:

Fraud and Forgery Records.

SYSTEM LOCATION:

[CHANGE TO READ]

These records are located at the Federal Retirement Thrift Investment Board, 77 K Street NE., Suite 1000, Washington, DC 20002 and at the office of the entity engaged by the Agency to perform record keeping services for the TSP. The current address for the Agency's record keeper is listed at *http://www.tsp.gov.*

SYSTEM MANAGER(S) AND ADDRESS:

[CHANGE TO READ]

Director, Office of Participant Services, Federal Retirement Thrift Investment Board, 77 K Street NE., Suite 1000, Washington, DC 20002.

NOTIFICATION PROCEDURE:

Inquiries under the Privacy Act of 1974 should be addressed to the Privacy Act Officer, Federal Retirement Thrift Investment Board, 77 K Street NE., Suite 1000, Washington, DC 20002. All individuals making inquiries should provide with their requests as much descriptive matter as is possible to identify the particular record desired.

[FR Doc. 2012–4489 Filed 2–24–12; 8:45 am]

BILLING CODE 6760–01–P

DEPARTMENT OF HEALTH AND HUMAN SERVICES

Interagency Coordinating Committee on the Validation of Alternative Methods (ICCVAM) Recommendations on the Use of the Murine Local Lymph Node Assay for Potency Categorization of Chemicals Causing Allergic Contact Dermatitis: Availability of Federal Agency Responses

AGENCY: Division of the National Toxicology Program (DNTP), National Institute of Environmental Health Sciences (NIEHS), National Institutes of Health (NIH).

ACTION: Availability of Agency Responses.

SUMMARY: The NTP Interagency Center for the Evaluation of Alternative Toxicological Methods (NICEATM) announces availability of U.S. Federal agency responses to ICCVAM test method recommendations on the use of the murine local lymph node assay (LLNA) for potency categorization of chemicals causing allergic contact dermatitis (ACD). ICCVAM forwarded the recommendations to Federal agencies and made these recommendations available to the public (76 FR 45254). In accordance with the ICCVAM Authorization Act of 2000 (42 U.S.C. 285*l*–3), agencies have notified ICCVAM in writing of their findings, and ICCVAM is making these responses available to the public. Federal agency responses are available on the NICEATM–ICCVAM Web site at *http://iccvam.niehs.nih.gov/methods/immunotox/LLNApotency.htm.* The ICCVAM recommendations are provided in the ICCVAM test method evaluation report (ICCVAM, 2011).

FOR FURTHER INFORMATION CONTACT: Dr. William S. Stokes, Director, NICEATM, NIEHS, P.O. Box 12233, Mail Stop: K2–16, Research Triangle Park, NC 27709, (telephone) 919–541–2384, (fax) 919–541–0947, (email) *niceatm@niehs.nih.gov.* Courier address: NICEATM, NIEHS, Room 2034, 530 Davis Drive, Morrisville, NC 27560.

SUPPLEMENTARY INFORMATION:

Background

The LLNA is accepted worldwide as a valid alternative to traditionally accepted guinea pig test methods for assessing ACD hazard potential for most testing applications. In January 2007, the U.S. Consumer Product Safety Commission (CPSC) requested that NICEATM and ICCVAM evaluate the LLNA for its usefulness for determining skin sensitization potency categories.

The CPSC, under the Federal Hazardous Substances Act, requires hazard labeling of products considered to be strong skin sensitizers. Results from tests that could be used to identify potential strong human skin sensitizers would support the CPSC and other agencies with an interest in identifying strong skin sensitizers. While guinea pig tests have traditionally been used to categorize the potency of skin sensitizers, the LLNA uses fewer animals, requires less time to perform, provides dose-response information, and eliminates the pain and distress produced by positive reactions.

Accordingly, NICEATM and ICCVAM evaluated the extent that the LLNA could be used to correctly predict ''strong'' versus ''other than strong'' human skin sensitizers. NICEATM, working in collaboration with the ICCVAM Interagency Immunotoxicity Working Group (IWG), prepared a draft background review document (BRD) and draft recommendations for use of the LLNA for potency categorization of chemicals that cause ACD in humans. The draft BRD and draft ICCVAM recommendations were reviewed in a public meeting of an international independent scientific peer review panel in March 2008; the peer review panel report was made available to the public for comment in May 2008 (73 FR 29136). The Scientific Advisory Committee on Alternative Toxicological Methods (SACATM) discussed and commented on the report, draft BRD, and draft ICCVAM recommendations at its June 2008 meeting (73 FR 25754). ICCVAM considered the panel's report, comments from SACATM, and public comments, and finalized its recommendations.

The final ICCVAM recommendations are provided in the *ICCVAM Test Method Evaluation Report: Usefulness and Limitations of the Murine Local Lymph Node Assay for Potency Categorization of Chemicals Causing Allergic Contact Dermatitis in Humans* (NIH Publication No. 11–7709, available at *http://iccvam.niehs.nih.gov/methods/immunotox/LLNA-pot/TMER.htm*). The test method evaluation report also includes an updated ICCVAM-recommended LLNA protocol and recommended future studies that may further characterize the usefulness and limitations of the LLNA for potency determinations. The final BRD, including additional analyses performed by NICEATM as recommended by the peer review panel, is included as an appendix to the test method evaluation report. ICCVAM recommended that positive results from ACD safety testing using the murine LLNA could be used to categorize some chemicals and products as strong skin sensitizers. However, since the current LLNA decision criterion only identified 52% of the strong human skin sensitizers, ICCVAM recommended that this criterion should not be used as the basis for determining that a substance is not a strong skin sensitizer. Therefore, the potency criterion should only be used in a screening approach, where chemicals that meet the criterion could be categorized as strong skin sensitizers, but chemicals that do not meet the criterion would require additional testing or information to determine that they are not strong skin sensitizers. In accordance with the Public Health Service Policy on Humane Care and Use of Laboratory Animals and Animal Welfare Act regulations, the LLNA should be routinely considered when planning animal studies to evaluate whether chemicals and products are strong sensitizers in order to minimize animal use and to avoid unrelieved pain and distress, and should be used when determined appropriate.

Agency Responses to ICCVAM Recommendations

In June 2011, ICCVAM forwarded final test method recommendations on using the LLNA for potency categorization of chemicals to U.S. Federal agencies for consideration (76 FR 45254), in accordance with the ICCVAM Authorization Act of 2000 (42 U.S.C. 285*l*–3). The ICCVAM Authorization Act requires member agencies to review ICCVAM test method recommendations and notify ICCVAM in writing of their findings no later than 180 days after receipt of recommendations. The Act also requires ICCVAM to make ICCVAM recommendations and agency responses available to the public. Agency responses are to include identification of relevant test methods for which the ICCVAM test method recommendations may be added or substituted and indicate any revisions or planned revisions to existing guidelines, guidances, or regulations to be made in response to these recommendations. Complete agency responses are available at *http://iccvam.niehs.nih.gov/methods/immunotox/LLNApotency.htm.*

Background Information on NICEATM, ICCVAM, and SACATM

ICCVAM is an interagency committee composed of representatives from 15 Federal regulatory and research agencies that require, use, generate, or disseminate toxicological and safety testing information. ICCVAM conducts technical evaluations of new, revised, and alternative safety testing methods with regulatory applicability and promotes the scientific validation and regulatory acceptance of toxicological and safety testing methods that more accurately assess the safety and hazards of chemicals and products while reducing animal use, refining animal use by enhancing animal welfare and lessening or avoiding unrelieved pain and distress, or replacing animals used for testing. The ICCVAM Authorization Act of 2000 (42 U.S.C. 285*l*–3) established ICCVAM as a permanent interagency committee of the NIEHS under NICEATM. NICEATM administers ICCVAM, provides scientific and operational support for ICCVAM-related activities, and conducts independent validation studies to assess the usefulness and limitations of new, revised, and alternative test methods and strategies. NICEATM and ICCVAM work collaboratively to evaluate new and improved test methods and strategies applicable to the needs of U.S. Federal agencies. NICEATM and ICCVAM welcome the public nomination of new, revised, and alternative test methods and strategies for validation studies and technical evaluations. Additional information about ICCVAM and NICEATM can be found on the NICEATM–ICCVAM Web site (*http://iccvam.niehs.nih.gov*).

SACATM was established in response to the ICCVAM Authorization Act [Section 285*l*–3(d)] and is composed of scientists from the public and private sectors (67 FR 11358). SACATM advises ICCVAM, NICEATM, and the Director of the NIEHS and NTP regarding statutorily mandated duties of ICCVAM and activities of NICEATM. SACATM provides advice on priorities and activities related to the development, validation, scientific review, regulatory acceptance, implementation, and national and international harmonization of new, revised, and alternative toxicological test methods. Additional information about SACATM, including the charter, roster, and records of past meetings, can be found at *http://ntp.niehs.nih.gov/go/167.*

Reference

ICCVAM. 2011. ICCVAM Test Method Evaluation Report: Usefulness and Limitations of the Murine Local Lymph Node Assay for Potency Categorization of Chemicals Causing Allergic Contact Dermatitis in Humans. NIH Publication No. 11–7709. Research Triangle Park, NC: National Institute of Environmental Health Sciences. Available: *http://iccvam.niehs.nih.gov/methods/immunotox/LLNA-pot/TMER.htm.*

Dated: February 15, 2012.

John R. Bucher,

Associate Director, National Toxicology Program.

[FR Doc. 2012–4541 Filed 2–24–12; 8:45 am]

BILLING CODE 4140–01–P

DEPARTMENT OF HEALTH AND HUMAN SERVICES

Office of the Secretary

Findings of Research Misconduct

AGENCY: Office of the Secretary, HHS.

ACTION: Notice.

SUMMARY: Notice is hereby given that the Office of Research Integrity (ORI) has taken final action in the following case:

Michael W. Miller, Ph.D., State University of New York, Upstate Medical University: Based on the report of an investigation conducted by the State University of New York, Upstate Medical University (SUNY UMU) and additional analysis conducted by ORI in its oversight review, ORI found that Dr. Michael W. Miller, former Professor and Chair, Department of Neuroscience and Physiology, SUNY UMU, engaged in research misconduct in research supported by National Institute of Alcohol Abuse and Alcoholism (NIAAA), National Institutes of Health (NIH), grants R01 AA07568–18A1, R01 AA06916, and P50 AA017823–01.

ORI finds that the Respondent engaged in research misconduct by falsifying and/or fabricating data that were included in grant applications R01 AA07568–18, R01 AA07568–18A1, R01 AA006916–25, and P50 AA017823–01 and in the following:

- Miller, M.W., Hu, H. ''Lability of neuronal lineage decisions is revealed by acute exposures to ethanol.'' *Dev. Neurosci.* 31(1–2):50–7, 2009 (''*Dev. Neurosci.* 2009'')
- Bruns, M.B., Miller, M.W. ''Functional nerve growth factor and trkA autocrine/paracrine circuits in adult rat cortex are revealed by episodic ethanol exposure and withdrawal.'' *J. Neurochem.* 100(5):1115–68, 2007 (''*J. Neurochem.* 2007'')
- A prepared manuscript submitted to *PNAS* for publication.

As a result of its investigation, SUNY UMU recommended that *Dev. Neurosci.* 2009 and *J. Neurochem.* 2007 be retracted. Both publications have now been retracted:

- *Dev. Neurosci.* 2009 was retracted online on January 19, 2012, at: *http://content.karger.com/ProduktеDB/produkte.asp?Aktion=ShowPDF&ArtikelNr=323471&Ausgabe=0&ProduktNr=224107&filename=323471.pdf.*
- *J. Neurochem.* 2007 was retracted online on January 23, 2012, at: *http://onlinelibrary.wiley.com/doi/10.1111/j.1471-4159.2012.07662.x/full.*

Specifically, ORI finds that the Respondent:

- Falsified Figure 5 in NIH grant application R01 AA07568–18A1 by altering the bar graphs to make the experimental results appear valid and consistent with his hypothesis that ethanol exposure *in-utero* alters the transition of cells from Pax 6 expression to Tbr2 expression, which is critical to normal brain development. Specifically:

a. In the VZ/SZ panel (upper row, right), Dr. Miller decreased the values by 50% for the bar graphs representing control and treated mice for ''Tbr2,'' ''both,'' and ''both/Ki-67,'' to falsely report an equivalent frequency of Tbr2 expressing cells in the right and left panels; this result was required for the experiment to appear valid;

b. In the MGE panel (lower row, right), Dr. Miller altered the bar graphs representing control and treated mice for ''Ki-67,'' ''Pax6,'' and ''both'' to falsely report that ethanol increased the frequency of K–67+ cells and to report an equivalent frequency of Pax expressing cells in the right and left panels.

- Fabricated bar graphs in Supplemental Figure 2 in a manuscript submitted to *PNAS* and text in the manuscript also appearing in the grant application AA00616–25 to support the hypothesis that ethanol exposure during postnatal weeks 1 and 2 causes specific neuronal cell death in layers II/III and V of the cortex. Specifically, Dr. Miller:

a. Fabricated bar graphs in Supplemental Figure 2 and related text in the *PNAS* manuscript to show that in select layers of the cortex, ethanol induced neuronal death occurred in post-natal day 10 (P10) mice;

b. Included fabricated text in the *PNAS* manuscript and the grant application citing results of experiments using 15–25-day-old mice treated with ethanol during the second postnatal week, when these mice were never generated.

- Falsified Figure 6 in a manuscript submitted to *PNAS* by altering data points for the labeling index of caspase3 and TUNEL in cortex layers II/III and V after exposure to ethanol in postnatal day 7 (P7) mice, such that the two assays confirmed each other. The same data were also included as Figure 4 in NIH grant application R01 AA06916 and as Figure 7 in a poster presentation at the 2009 Research Society on Alcoholism.
- Falsified the figure legends and/or text in a published paper and multiple grant applications to support the primary hypothesis of the published paper that gestational alcohol exposure had an effect on brain development by affecting the way neurons differentiate and migrate into the cortex, rather than by changes to cell growth or death. Specifically, Dr. Miller falsely reported the number of animals (n) that were used in figure legends and/or text in the following:
  - Figures 2 and 5, *Dev. Neurosci.* 2009, also included as Figures 3 and 4, respectively, in R01 AA07568–18;
  - Figure 4 and Table 2 in P50 AA017823–01.
- Falsified Figures 4 and 6 in *J. Neurochem.* 2007 by altering bar graphs to increase the significance of the effect of ethanol exposure and/or withdrawal on NGF or trkA protein expression, thereby conforming with the paper's hypothesis that ethanol exposure and withdrawal affect the normal NGF/trkA circuits in cortical layer V. Specifically, Dr. Miller:

a. Increased the value of the ethanol treated NGF expression in Figure 4 and decreased the value of withdrawal NFG to alter the difference between the two from approximately 2.2% to 11.6%, thereby falsely reporting significance where there was none;

b. In Figure 6:

(a) Increased the value of withdrawal trkA data by approximately 70% to falsely report significance with relation to the ethanol treated value and increase significance with relation to the control;

(b) Increased the value of the ethanol treated phospho-trkA data by approximately 100% to increase the significance with relation to the control;

(c) Falsely reported the results for Figure 6 as showing a nearly doubled ratio of p-trkA to total trkA after ethanol exposure when there was no increase at all.

Dr. Miller has entered into a Voluntary Exclusion Agreement (Agreement). Dr. Miller neither admits nor denies committing research misconduct but accepts ORI has found evidence of research misconduct as set forth above.

Dr. Miller has voluntarily agreed:

(1) To exclude himself voluntarily from any contracting or subcontracting with any agency of the United States Government and from eligibility or involvement in nonprocurement programs of the United States Government referred to as ''covered transactions'' pursuant to HHS' Implementation (2 CFR part 376 *et seq*) of OMB Guidelines to Agencies on Governmentwide Debarment and

Suspension, 2 CFR part 180 (collectively the ''Debarment Regulations'') for a period of one (1) year, beginning on February 6, 2012;

(2) To have his research supervised for a period of two (2) years immediately following the one (1) year period of exclusion; Respondent agrees that prior to the submission of an application for U.S. Public Health Service (PHS) support for a research project on which the Respondent's participation is proposed and prior to the Respondent's participation in any capacity on PHS-supported research, Respondent shall ensure that a plan for supervision of Respondent's duties is submitted to ORI for approval; the supervision plan must be designed to ensure the scientific integrity of Respondent's research contribution as outlined below; Respondent agrees that he shall not participate in any PHS-supported research until such a supervision plan is submitted to and approved by ORI; Respondent agrees to maintain responsibility for compliance with the agreed upon supervision plan; the requirements for Respondent's supervision plan are as follows:

i. A committee of 2–3 senior faculty members at the institution who are familiar with Respondent's field of research, but not including Respondent's supervisor or collaborators, will provide oversight and guidance for two (2) years immediately following the period of exclusion; the committee will review primary data from Respondent's laboratory on a quarterly basis and submit a report to ORI at six (6) month intervals setting forth the committee meeting dates, Respondent's compliance with appropriate research standards, and confirming the integrity of Respondent's research; and

ii. The committee will conduct an advance review of any PHS grant applications (including supplements, resubmissions, etc.), manuscripts reporting PHS-funded research submitted for publication, and abstracts; the review will include a discussion with Respondent of the primary data represented in those documents and include a certification to ORI that the data presented in the proposed application/publication is supported by the research record;

(3) That any institution employing him during the two (2) years during which the supervisory plan is in effect shall submit, in conjunction with each application for PHS funds, or report, manuscript, or abstract involving PHS-supported research in which Respondent is involved, a certification to ORI that the data provided by Respondent are based on actual experiments or are otherwise legitimately derived and that the data, procedures, and methodology are accurately reported in the application, report, manuscript, or abstract; and

(4) To exclude himself from serving in any advisory capacity to PHS including, but not limited to, service on any PHS advisory committee, board, and/or peer review committee, or as a consultant for a period of three (3) years, beginning on February 6, 2012.

FOR FURTHER INFORMATION CONTACT: Director, Division of Investigative Oversight, Office of Research Integrity, 1101 Wootton Parkway, Suite 750, Rockville, MD 20852, (240) 453–8800.

John Dahlberg,

Director, Division of Investigative Oversight, Office of Research Integrity.

[FR Doc. 2012–4366 Filed 2–24–12; 8:45 am]

BILLING CODE 4150–31–P

DEPARTMENT OF HEALTH AND HUMAN SERVICES

Centers for Disease Control and Prevention

[30Day–12–11JD]

Agency Forms Undergoing Paperwork Reduction Act Review

The Centers for Disease Control and Prevention (CDC) publishes a list of information collection requests under review by the Office of Management and Budget (OMB) in compliance with the Paperwork Reduction Act (44 U.S.C. Chapter 35). To request a copy of these requests, call the CDC Reports Clearance Officer at (404) 639–7570 or send an email to *omb@cdc.gov.* Send written comments to CDC Desk Officer, Office of Management and Budget, Washington, DC 20503 or by fax to (202) 395–5806. Written comments should be received within 30 days of this notice.

Proposed Project

Evaluation of Dating Matters: Strategies to Promote Healthy Teen Relationships™—New—National Center for Injury Prevention and Control—Centers for Disease Control and Prevention.

Background and Brief Description

Dating Matters: Strategies to Promote Healthy Teen Relationships™ is the Centers for Disease Control and Prevention's new teen dating violence prevention initiative.

Recently, efforts to prevent teen dating violence (TDV) have grown, particularly in schools, among policymakers, and among sexual violence and domestic violence coalitions. Now many states and communities also are working to stop teen dating violence. However, these activities vary greatly in quality and effectiveness. To address the gaps, CDC has developed *Dating Matters,* a teen dating violence prevention program that includes programming for students, parents, educators, as well as policy development. Dating Matters is based on the current evidence about what works in prevention and focuses on high-risk, urban communities where participants include: Middle school students age 11 to 14 years; middle school parents; brand ambassadors; educators; school leadership; program implementers; community representatives; and local health department representatives in the following communities: Alameda County, California; Baltimore, Maryland; Broward County, Florida; and Chicago, Illinois.

The primary goal of the current proposal is to conduct an outcome and implementation evaluation of Dating Matters in the four metropolitan cities to determine its feasibility, cost, and effectiveness. In the evaluation a standard model of TDV prevention (Safe Dates administered in 8th grade) will be compared to a comprehensive model (programs administered in 6th, 7th, and 8th grade as well as parent, educator, policy, and communications interventions).

Burden estimates are based on the following information:

- Number of communities/sites: 4
- Number of schools across 4 communities/sites: 44 (12 in 3 communities, 8 in 1 community)
- Number of students in each middle school: 600 (200 per grade)
- Number of school staff in each school: 40
- Number of schools implementing the standard model of TDV prevention: 22 (across 4 sites/communities)
- Number of schools implementing the comprehensive model of TDV prevention: 22 (across 4 sites/communities)

Population. The study population includes students in 6th, 7th and 8th grades at 44 schools in the four participating sites. At most, schools are expected to have 6 classrooms per grade, with an average of 30 students per classroom yielding a population of 23,760 students (44 schools * 3 grades * 6 classrooms per grade * 30 students per classroom).

The sampling frame for parents, given that we would only include one parent per student, is also 23,760 for the three years of data collection covered by this

package. Based on our research and consultation with middle schools, most schools with 600 students have approximately 40 staff. If we assume 40 educators per school, the sampling frame for the educator sample is 1,760.

The following are explanations of estimated burden by respondent:

Students: The study will survey samples of classrooms from all three middle school grade levels in the 44 schools, annually over a 4 year data collection period (see Figure 2). (Please note that we recognize that our OMB approval will expire after 3 years and we will submit a new package at that time so that the life of the project is approved.) In each year of data collection, we will recruit 30 students per classroom * a sample of 4 classrooms per grade * 3 grades * 44 schools, resulting in a student sample of 15,840. We assume a 95% participation rate (n = 15,048) for the baseline student survey (due to students being absent and parents not providing consent for student participation). Because this is a longitudinal data collection, the mid-term and follow-up surveys will lose some students due to attrition (e.g., students absent; students move out of district; parents withdraw permission). At mid-term, we assume a retention rate of 92.5% of the 15,840 students (n = 14,652), and at follow-up (at the end of the school year), we assume a retention rate of 90% of the 15,840 students (n = 14,256).

Parents: We will recruit parents of 17% of the student sample (15,840) inclusive of parents participating in the parent curricula, and those who choose not to participate in the parent curricula, from both the Dating Matters schools and the standard-of-care schools. We will recruit a sample of 17% of eligible parents per grade per school for a total of 2,693 parents. Assuming 90% of the 2,693 parents agree to participate at baseline (n = 2,424) and we retain 90% of participating parents from baseline, we will have a final follow-up sample of 2,181 parents.

Educators: We will attempt to recruit all educators in each school (44 schools * 40 educators per school = 1,760), who are assumed to stay in their positions over the study period (in contrast to the cohorts of students moving through the school). We expect a 90% participation rate for an estimated sample of 1,584 educators.

School data extractors: We will attempt to recruit one data extractor per 44 schools to extract school data to be used in conjunction with the outcome data for the students. Individual level school data will only be collected for students participating in the evaluation, so this data will reflect the same sampling frame as the student survey data. As a result, the data extractors in each school will access individual school-level data for those students in their school who consented and participated in the baseline student survey (3 * 4 * 30 * 95% = 342).

For the *student focus groups,* the contractor will work with teachers and principals to construct how students are selected and grouped together, resulting in groups of 10 students per group. Two groups will be held per each of the 4 sites (10 × 2 × 4 = 80 total student participants) moderated in a uniform manner according to the student focus group guide (Attachment ZZ).

Student implementer focus groups will be organized by site (moderated according to guidance in Attachments AAA and BBB), with two annual focus groups per site with 10 implementers in each group (10 × 2 × 4 = 80 total student program implementer participants).

Parent program implementer focus groups will be organized by site (moderated according to guidance in Attachments AAA and BBB), with two annual focus groups per site with 10 implementers in each group (10 × 2 × 4 = 80 total parent program implementer participants).

School leadership: based on the predicted number of one school leadership (e.g., principal, vice principal) per comprehensive school (22 schools), the number of respondents will be 22.

Local Health Department representative: based on the predicted number of four communities/sites and four local health department representatives working on Dating Matters per community, the number of respondents will be 16.

Parent Program Manager: With a maximum of one parent program manager per community/site, the number of program manager respondents will be 4.

Community Representative: based on the predicted number of 10 community representatives per 4 communities/sites, the number of respondents will be 40.

Parent Curricula Implementers: it is expected that each school implementing the comprehensive approach (n = 22) will have one male and one female parent implementing the parent programs respondents will be (2 parents × 22 schools) 44 implementers. Please note that on the burden table the number of respondents is multiplied by the number of sessions in each parent program.

For example, the 6th grade program has 6 sessions and 264 (44 × 5) are listed.

The 7th grade program has three sessions and 132 (44 × 3) are listed.

The 8th grade parent curriculum is mailed to parents and, as such, does not involve implementers or session logs.

Student Curricula Implementers: based on the predicted number of seven student curricula implementers per grade per school (n = 22) that will be completing fidelity instruments, the total number of respondents will be 154 per grade. Please note that on the burden table, the number of respondents is multiplied by the number of sessions in each student curricula program.

For example, the 6th grade curriculum has 6 sessions, so a total of 924 total respondents are listed (154 × 6).

The 7th grade program has 7 sessions, so a total of 1078 total respondents are listed.

The 8th grade comprehensive program has 10 sessions and 1540 respondents are listed.

The 8th grade standard program has 10 sessions and 1540 total respondents are listed.

Brand Ambassadors: The Brand Ambassador Implementation Survey will be provided to each brand ambassador in each community. With a maximum of 20 brand ambassadors per community, the feedback form will be collected from a total of 80 brand ambassadors.

Communications Implementers (''Brand Ambassador Coordinators''): The Communications Campaign Tracking form will be provided to each brand ambassador coordinator in each community. With a maximum of one brand ambassador coordinator per community (n = 4), the feedback form will be collected from a total of 4 brand ambassador coordinators.

Student Program Master Trainer TA Form: With a maximum of 3 master trainers per community. There will be 12 master trainers. It is anticipated that they will receive up to 50 TA requests per year and complete the form 50 times.

There are no costs to the respondents other than their time. The total estimated annual burden hours are 44,978.

ESTIMATED ANNUALIZED BURDEN HOURS

Type of respondent	Form name	Number of respondents	Number of responses per respondent	Average burden per response (hours)
Student Program Participant	Student Outcome Survey Baseline Attachment D.	15,048	1	45/60
Student Program Participant	Student Outcome Survey Mid-Term Attachment F.	14,652	1	45/60
Student Program Participant	Student Outcome Survey Follow-up Attachment E.	14,256	1	45/60
School data extractor	School Indicators Attachment G:	44	342	15/60
Parent Program Participant	Parent Outcome Baseline Survey Attachment H	2,424	1	1
Parent Program Participant	Parent Outcome Follow-up Survey Attachment EEEE.	2,181	1	1
Educator	Educator Outcome Survey Attachment I	1,584	2	30/60
Student Brand ambassador	Brand Ambassador Implementation Survey Attachment J.	80	2	20/60
School leadership	School Leadership Capacity and Readiness Survey Attachment K.	22	1	1
Parent Curricula Implementer	Parent Program Fidelity 6th Grade Session 1–Session 6 Attachment L–Q.	264	3	15/60
Parent Curricula Implementer	Parent Program Fidelity 7th Grade Session 1, 3, 5 Attachment R–T.	132	3	15/60
Student Curricula Implementer	Student Program Fidelity 6th Grade Session 1–Session 6 Attachment U–Z.	924	1	15/60
Student Curricula Implementer	Student Program Fidelity 7th Grade Session 1–Session 7 Attachment AA–GG.	1078	1	15/60
Student Curricula Implementer	Student Program Fidelity 8th Grade Session 1–Session 10 (comprehensive) Attachment HH–QQ.	1540	1	15/60
Communications Coordinator	Communications Campaign Tracking Attachment RR.	4	4	20/60
Local Health Department Representative.	Local Health Department Capacity and Readiness Attachment SS.	16	1	2
Student Program Participant	Student participant focus group guide (time spent in focus group) Attachment ZZ.	80	1	1.5
Student Curricula Implementer	Student curricula implementer focus group guide (time spent in focus group) Attachment AAA.	80	1	1
Parent Curricula Implementer	Parent curricula implementer focus group guide (time spent in focus group) Attachment BBB.	80	1	1
Student Curricula Implementer	Safe Dates 8th Grade Session 1–Session 10 (standard) Attachment CCC–LLL.	1540	1	15/60
Student Master Trainer	Student program master trainer TA form Attachment DDDD.	12	50	10/60

Dated: February 21, 2012.

Kimberly S. Lane,

Reports Clearance Officer, Centers for Disease Control and Prevention.

[FR Doc. 2012–4561 Filed 2–24–12; 8:45 am]

BILLING CODE 4163–18–P

DEPARTMENT OF HEALTH AND HUMAN SERVICES

Centers for Disease Control and Prevention

[60Day-12–12EV]

Proposed Data Collections Submitted for Public Comment and Recommendations

In compliance with the requirement of Section 3506(c)(2)(A) of the Paperwork Reduction Act of 1995 for opportunity for public comment on proposed data collection projects, the Centers for Disease Control and Prevention (CDC) will publish periodic summaries of proposed projects. To request more information on the proposed projects or to obtain a copy of the data collection plans and instruments, call 404–639–7570 and send comments to Kimberly S. Lane, CDC Reports Clearance Officer, 1600 Clifton Road MS–D74, Atlanta, GA 30333 or send an email to *omb@cdc.gov.*

Comments are invited on: (a) Whether the proposed collection of information is necessary for the proper performance of the functions of the agency, including whether the information shall have practical utility; (b) the accuracy of the agency's estimate of the burden of the proposed collection of information; (c) ways to enhance the quality, utility, and clarity of the information to be collected; and (d) ways to minimize the burden of the collection of information on respondents, including through the use of automated collection techniques or other forms of information technology. Written comments should be received within 60 days of this notice.

Proposed Project

Ensuring compliance with the OSHA Bloodborne Pathogens Standard among Non-Hospital Healthcare Facilities—New—National Institute for Occupational Safety and Health (NIOSH), Centers for Disease Control and Prevention (CDC).

Background and Brief Description

The Centers for Disease Control and Prevention estimate that healthcare workers sustain nearly 600,000 percutaneous injuries annually involving contaminated sharps. In

response to both the continued concern over such exposures and the technological developments which can increase employee protection, Congress passed the Needle-stick Safety and Prevention Act directing OSHA to revise the blood borne pathogens (BBP) standard to establish requirements that employers identify and make use of effective and safer medical devices. That revision was published on January 18, 2001, and became effective April 18, 2001.

The revision to OSHA's blood-borne pathogens standard added new requirements for employers, including additions to the exposure control plan and maintenance of a sharps injury log.

OSHA has determined that compliance with these standards significantly reduces the risk that workers will contract a blood-borne disease in the course of their work. However, blood-borne pathogens programs, policies, and standards for health care workers are based primarily on hospital data. Approximately one-half of the 11 million health care workers in the United States are employed in non-hospital-based settings, such as physician offices, home healthcare agencies, correctional facilities, or dental offices and clinics. Little information is known about the risk management practices in these non-hospital settings. A small study conducted by the National Institute for Occupational Safety and Health (NIOSH) found that although seven of the eight correctional health care facilities visited had written exposure control plans, only two were reviewed and updated annually as required by the OSHA BBP Standard. One reason postulated for non-compliance was that hospital-based standards, policies, and programs may not be appropriate to non-hospital settings. It is important to identify effective methods for using exposure control plans in non-hospital settings and to verify whether the specificity and relevance of bloodborne pathogen training and educational materials for non-hospital facilities can positively impact compliance in dental settings.

The purposes of this proposal are to insure that bloodborne pathogens exposure control plans are effectively implemented in private dental offices and dental clinics, an important segment of the non-hospital based healthcare system; and to understand how effective implementation strategies may be applied to other healthcare settings. The proposed work will draw on research-to-practice principles and will be assisted by a strong network of dental professional groups, trade associations, and government agencies. Specific objectives are to:

(1) inventory existing exposure control plans in dental healthcare settings.

(2) determine if the exposure control plan or other resource is actively used to prevent occupational exposures.

(3) determine available resources and barriers to use such as relevant educational materials, knowledge, costs, availability, etc.

(4) develop strategies to overcome key barriers to compliance.

(5) report lessons learned applicable to the entire health sector.

The Organization for Safety, Asepsis and Prevention (OSAP) is a unique group of dental educators and consultants, researchers, clinicians, industry representatives, and other interested persons with a collective mission to be the world's leading advocate for the safe and infection-free delivery of oral care. OSAP supports this commitment to dental workers and the public through quality education and information dissemination. OSAP's unique membership includes the variety of partners critical to gather the data on compliance with the OSHA bloodborne pathogens standard, identify barriers and develop strategies to overcome barriers to compliance.

OSAP will be conducting a Web survey of private dental practices in the United States. Information collected will include current level of existing exposure control plans in various dental healthcare settings; whether the plan or other resource is actively used to prevent occupation exposures; available resources and barriers to use such as relevant education materials, knowledge, costs, and availability. OSAP is working with a publishing partner that has a double-opt-in email distribution list of 45,419 dentists. The dentists in the email list represent every state in the country. The list represents 32% of the total population of working dentists in the United States.

The average open rate for this list is 12.76%, which would represent 5,768 dentists. The targeted number of completed questionnaires is estimated at about 566 (10% participation rate is assumed since there will be an incentive and one reminder). The survey is estimated to take about 10 minutes for respondents to complete.

There are no costs to the respondents other than their time.

ESTIMATED ANNUALIZED BURDEN HOURS

Type of respondents	Form name	Number of respondents	Number of responses per respondent	Average burden per response (in hrs)	Total burden (in hrs)
Private Dental Practices	BBP Exposure Control Plan Survey	566	1	10/60	94
Total					94

Kimberly S. Lane,

Reports Clearance Officer, Centers for Disease Control and Prevention.

[FR Doc. 2012–4557 Filed 2–24–12; 8:45 am]

BILLING CODE 4163–18–P

DEPARTMENT OF HEALTH AND HUMAN SERVICES

Centers for Disease Control and Prevention

[60Day–12–0493]

Proposed Data Collections Submitted for Public Comment and Recommendations

In compliance with the requirement of Section 3506(c)(2)(A) of the Paperwork Reduction Act of 1995 for opportunity for public comment on proposed data collection projects, the Centers for Disease Control and Prevention (CDC) will publish periodic summaries of proposed projects. To request more information on the proposed projects or to obtain a copy of the data collection plans and instruments, call 404–639–7570 and send comments to Kimberly Lane, CDC Reports Clearance Officer, 1600 Clifton Road, MS–D74, Atlanta, GA 30333 or send an email to *omb@cdc.gov.*

Comments are invited on: (a) Whether the proposed collection of information is necessary for the proper performance of the functions of the agency, including whether the information shall have practical utility; (b) the accuracy of the agency's estimate of the burden of the proposed collection of information; (c) ways to enhance the quality, utility, and clarity of the information to be collected; and (d) ways to minimize the burden of the collection of information on respondents, including through the use of automated collection techniques or other forms of information technology. Written comments should be received within 60 days of this notice.

Proposed Project

2013 and 2015 National Youth Risk Behavior Surveys (YRBS)(OMB No. 0920–0493)—Reinstatement with change—National Center for Chronic Disease Prevention and Health Promotion (NCCDPHP), Centers for Disease Control and Prevention (CDC).

Background and Brief Description

The purpose of this request is to obtain OMB approval to reinstate with change, the data collection for the National Youth Risk Behavior Survey (YRBS), a school-based survey that has been conducted biennially since 1991. OMB approval for the 2009 YRBS and 2011 YRBS expired November 30, 2011 (OMB no. 0920–0493). CDC seeks a three-year approval to conduct the YRBS in Spring 2013 and Spring 2015. Minor changes incorporated into this reinstatement request include: An updated title for the information collection to accurately reflect the years in which the survey will be conducted and minor changes to the data collection instrument.

The YRBS assesses priority health risk behaviors related to the major preventable causes of mortality, morbidity, and social problems among both youth and young adults in the United States. Data on health risk behaviors of adolescents are the focus of approximately 65 national health objectives in Healthy People 2020, an initiative of the U.S. Department of Health and Human Services (HHS). The YRBS provides data to measure 20 of the health objectives and 1 of the Leading Health Indicators established by Healthy People 2020. In addition, the YRBS can identify racial and ethnic disparities in health risk behaviors. No other national source of data measures as many of the Healthy People 2020 objectives addressing adolescent health risk behaviors as the YRBS. The data also will have significant implications for policy and program development for school health programs nationwide.

In Spring 2013 and Spring 2015, the YRBS will be conducted among nationally representative samples of students attending public and private schools in grades 9–12. Information supporting the YRBS also will be collected from state-, district-, and school-level administrators and teachers. The table below reports the number of respondents annualized over the 3-year project period.

There are no costs to respondents except their time. The total estimated annualized burden hours are 6,215.

ESTIMATED ANNUALIZED BURDEN HOURS

Type of respondent	Form name	Number of respondents	Number of responses per respondent	Average burden per response (in hours)	Total burden (in hours)
State Administrators	State-level Recruitment Script for the Youth Risk Behavior Survey.	17	1	30/60	8
District Administrators	District-level Recruitment Script for the Youth Risk Behavior Survey.	80	1	30/60	40
School Administrators	School-level Recruitment Script for the Youth Risk Behavior Survey.	133	1	30/60	67
Teachers	Data Collection Checklist for the Youth Risk Behavior Survey.	400	1	15/60	100
Students	Youth Risk Behavior Survey	8,000	1	45/60	6,000
Total Burden					6,215

Kimberly Lane,

Reports Clearance Officer, Centers for Disease Control and Prevention.

[FR Doc. 2012–4553 Filed 2–24–12; 8:45 am]

BILLING CODE 4163–18–P

DEPARTMENT OF HEALTH AND HUMAN SERVICES

Centers for Disease Control and Prevention

[60Day-12–12EK]

Proposed Data Collections Submitted for Public Comment and Recommendations

In compliance with the requirement of Section 3506(c)(2)(A) of the Paperwork Reduction Act of 1995 for opportunity for public comment on proposed data collection projects, the Centers for Disease Control and Prevention (CDC) will publish periodic summaries of proposed projects. To request more information on the proposed projects or to obtain a copy of the data collection plans and instruments, call 404–639–7570 or send comments to Kimberly Lane, CDC Reports Clearance Officer, 1600 Clifton Road, MS D–74, Atlanta, GA 30333 or send an email to *omb@cdc.gov.*

Comments are invited on: (a) Whether the proposed collection of information is necessary for the proper performance of the functions of the agency, including whether the information shall have practical utility; (b) the accuracy of the agency's estimate of the burden of the proposed collection of information; (c) ways to enhance the quality, utility, and clarity of the information to be collected; and (d) ways to minimize the burden of the collection of information on respondents, including through the use of automated collection techniques or other forms of information technology. Written comments should be received within 60 days of this notice.

Proposed Project

Process and Intermediate Outcome Evaluation of ''Teenage Pregnancy Prevention: Integrating Services, Programs, and Strategies through Community-Wide Initiatives''—New—National Center for Chronic Disease Prevention and Health Promotion (NCCDPHP), Centers for Disease Control and Prevention (CDC).

Background and Brief Description

In 2010, among Western industrialized nations, the United States had the highest rate of births among teens ages 15–19 years. Although the evidence strongly suggests that teenage pregnancy is a multifaceted problem stemming from interrelated internal and external factors, pregnancy prevention programs have typically focused on one factor (e.g., sex education or abstinence education). Several recent reviews have emphasized that multi-component approaches to teen pregnancy prevention, which are implemented at the local level, may offer the greatest potential in teenage pregnancy prevention. Multi-component approaches may include a combination of clinic services, sexuality education programs, job readiness training, academic tutoring, mentoring, and life skills training.

In his budget for Fiscal Year (FY) 2010, President Obama proposed a new Teenage Pregnancy Prevention (TPP) Initiative to address the high teen pregnancy and birth rates by replicating evidence-based models and testing innovative strategies. On December 16, 2009, the President signed the Consolidated Appropriations Act, 2010 (Pub. L. 111–117). Division D Title II of the Act provides $110,000,000 for making competitive contracts and grants to public and private entities to fund medically accurate and age appropriate programs that reduce teen pregnancy. It also includes some of the Federal costs associated with administering and evaluating such projects.

As part of this initiative, CDC released two funding opportunity announcements (FOAs) related to innovative evidence-based teenage pregnancy prevention programs: (1) DP10–1009, Teenage Pregnancy Prevention: Integrating Services, Programs, and Strategies Through Community-Wide Initiatives and (2) DP10–1025, Reducing Teen Pregnancy Through Family Planning: Integrating Services, Programs, and Strategies Through Community-Wide Initiatives. CDC is currently providing funding to nine state and community awardees, and five national organizations, to examine innovative, evidence-based teenage pregnancy prevention programs. Efforts are focused in communities with high rates of teen pregnancy in under-served African American and Latino youth. Components of these efforts include (1) implementing evidence-based or evidence-informed prevention programs; (2) linking teens to quality health services; (3) educating stakeholders (parents, community leaders, and other constituents) about relevant evidence-based or evidence-informed strategies to reduce teen pregnancy; and (4) supporting the sustainability of the community-wide teen pregnancy prevention effort through capacity building and improved coordination of services.

Upon receiving OMB approval, CDC proposes to collect the information needed to conduct a process and intermediate outcome evaluation of these efforts for the next three years of this five year TPP initiative. Using a repeat cross-sectional design, the information collection and evaluation plan will systematically document capacity building within funded communities over time and the extent to which communities implemented multi-component, community-wide initiative activities as planned. Respondents for the nine state and community awardees will include the project director/coordinator for each site, evaluators, and other program staff. In addition, to gain a variety of perspectives, information will be requested from multiple community and clinical partners associated with each state or community awardee (e.g., program implementers and core advisory group members). Information collected from these respondents will include needs assessments and selected costs of participating in the TPP initiative. Finally, CDC will collect information about the training and technical assistance needs of state and community awardees, and national organizations, which have been funded to support community-wide TPP activities.

Specifically, the following information will be collected: the needs of nine project directors/coordinators will be assessed; the estimated burden for this yearly assessment is 7 hours. Fifty state and community awardees with submit yearly progress towards meeting performance measures; the estimated burden for this yearly assessment is 200 hours. The needs of fifty staff members will be assessed; the estimated burden for this yearly assessment is 38 hours. Training and technical assistance from 50 state and community awardees will be assessed; the estimated burden for this as-needed assessment is 600 hours. The costs of 50 staff members will be assessed; the estimated burden for this as needed assessment is 125 hours. The training and technical assistance provided by 15 national organization awardee staff members will be assessed; the estimated burden for this as needed assessment is 180 hours. The needs of 50 clinical providers will be assessed; the estimated burden for this yearly assessment is 50 hours. The needs of 100 program implementation partners will be assessed; the estimated burden for this yearly assessment is 75 hours. The costs of 150 community of and clinical partner participants will be

assessed; the estimated burden for this as needed assessment is 375 hours. The costs of sponsored activities for 50 community and clinical partners; the estimated burden for this yearly assessment is 125 hours.

All information can be reported to CDC through an interactive web-based system, ''iGTO,'' that awardees can use to manage their general organizational information and to support and track the implementation of strategies to prevent teen pregnancy. Respondents who prefer not to use the iGTO system will be able to export the assessment tools, complete them, and return their reports to CDC by electronic mail. Assessment and performance information will be reported to CDC annually. In addition, CDC will collect information about costs and awardee needs for training and technical assistance. To ensure high data quality, cost information will be submitted as soon as it becomes available. CDC estimates that each state or community awardee will submit 10 cost data reports per year. Training and technical assistance needs will be reported monthly so that CDC can provide immediate, targeted technical assistance as needed. The assessment information, performance measures and training and technical assistance information to be collected are critical to understanding (1) the teen pregnancy prevention needs of each target community, (2) quality implementation practices associated with evidence-based programs and contraceptive access, and (3) the impact of implemented strategies.

OMB approval is requested for three years. There are no costs to respondents other than their time.

ESTIMATED ANNUALIZED BURDEN HOURS

Type of respondent	Form name	Number of respondents	Number of responses per respondent	Average burden per response (hr)	Total burden (hr)
State and Community Awardees	Project Director/Coordinator Needs Assessment.	9	1	45/60	7
	Performance Measure Assessment Tool.	50	1	4	200
	Staff Assessment	50	1	45/60	38
	Training and Technical Assistance Tool.	50	12	1	600
	Cost Reporting Form For Sponsored Activities.	50	10	15/60	125
National Organization Awardees	Training and Technical Assistance Tool.	15	112		180
Community and Clinical Partners	Clinical Provider Needs Assessment Tool.	50	1	1	50
	Program Implementation Partner Needs Assessment Tool.	100	1	45/60	75
	Partner Cost Reporting Form for Participants.	150	10	15/60	375
	Cost Reporting Form For Sponsored Activities.	50	10	15/60	125
Total					1,775

Kimberly S. Lane,

Chief Reports Clearance Officer, Centers for Disease Control and Prevention.

[FR Doc. 2012–4550 Filed 2–24–12; 8:45 am]

BILLING CODE 4163–18–P

DEPARTMENT OF HEALTH AND HUMAN SERVICES

Centers for Disease Control and Prevention

[60Day–12–12EG]

Proposed Data Collections Submitted for Public Comment and Recommendations

In compliance with the requirement of Section 3506(c)(2)(A) of the Paperwork Reduction Act of 1995 for opportunity for public comment on proposed data collection projects, the Centers for Disease Control and Prevention (CDC) will publish periodic summaries of proposed projects. To request more information on the proposed projects or to obtain a copy of the data collection plans and instruments, call 404–639–7570 or send comments to Kimberly Lane, CDC Reports Clearance Officer, 1600 Clifton Road, MS D–74, Atlanta, GA 30333 or send an email to *omb@cdc.gov.*

Comments are invited on: (a) Whether the proposed collection of information is necessary for the proper performance of the functions of the agency, including whether the information shall have practical utility; (b) the accuracy of the agency's estimate of the burden of the proposed collection of information; (c) ways to enhance the quality, utility, and clarity of the information to be collected; and (d) ways to minimize the burden of the collection of information on respondents, including through the use of automated collection techniques or other forms of information technology. Written comments should be received within 60 days of this notice.

Proposed Project

Use of Smartphones to Collect Information about Health Behaviors: Feasibility Study—New—National Center for Chronic Disease Prevention and Health Promotion (NCCDPHP), Centers for Disease Control and Prevention (CDC).

Background and Brief Description

Despite the high level of public knowledge about the adverse effects of smoking, tobacco use remains the leading preventable cause of disease and death in the U.S., resulting in approximately 443,000 deaths annually. During 2005–2010, the overall proportion of U.S. adults who were current smokers declined from 20.9% to 19.3%. Despite this decrease, smoking rates are still well above Healthy People 2010 targets for reducing adult smoking

prevalence to 12%, and the decline in prevalence was not uniform across the population.

One of the highest priorities emanating from the *American Recovery and Reinvestment Act of 2009* is tobacco control and cessation programs. In addition, the Family Smoking Prevention and Tobacco Control Act gave the Food and Drug Administration new authority to regulate tobacco products, and the Children's Health Insurance Program Reauthorization Act of 2009 included increases in Federal excise taxes on tobacco products. These developments reinforce the importance of timely collection of data related to tobacco usage.

The evolution of new communications technologies that are completely mobile provides a unique opportunity for innovation in public health. Text messaging and smartphone web access are immediate, accessible, and anonymous, a combination of features that could make smartphones ideal for the ongoing research, surveillance, and evaluation of risk behaviors and health conditions, as well as targeted dissemination of information.

CDC proposes to conduct a feasibility study to identify and evaluate the process of conducting surveys by text message and smartphone, the outcomes of the surveys, and the value of the surveys. Before initiating the feasibility study, CDC will conduct a brief pre-test of information collection forms and procedures. The universe for this study is English-speaking U.S. residents aged 18–65. The sample frame will consist of a national random digit dial sample of telephone numbers from a frame of known cell phone exchanges. Respondents will be recruited from this sample frame by calling cell phones numbers and asking respondents to complete an initial CATI survey consisting of a short series of simple demographic questions, general health questions, and questions about tobacco and alcohol use. At the conclusion of this brief survey, all respondents who have smartphones and a subset of respondents who do not have smartphones will be asked to participate in the follow-up portion of the feasibility study consisting of a first follow-up survey and, a week later, a second follow-up survey. Smartphone respondents who agree will receive invitations to participate by text message, which will include a link to the survey. Non-smartphone respondents who agree will receive a text message inviting them to participate; respondents opting in will be texted survey questions one at a time.

This study will evaluate: (1) Response bias of a smartphone health survey by comparing data collected via CATI to data collected via smartphones/text messages, and data collected via smartphones to data collected via text messages, (2) relative cost-effectiveness of data collected via CATI to data collected via smartphones/text messages; (3) coverage bias associated with restricting the sample to smartphone users; and (4) the utility of smartphones for completing frequent, short interviews (i.e. diary studies to track activities or events).

OMB approval is requested for one year. Participation is voluntary and respondents can choose not to participate at any time. There are no costs to respondents other than their time.

ESTIMATED ANNUALIZED BURDEN HOURS

Type of respondents	Form name	Number of respondents	Number of responses per respondent	Average burden per response (in hr)	Total burden (in hr)
Smartphone and non-smartphone users aged 18–65	Pre-test of CATI Screener/Initial CATI Survey	20	1	8/60	3
	CATI Screener	1,990	1	1/60	33
	Initial CATI Survey	995	1	7/60	116
Smartphone Users aged 18–65	First Web Survey Follow-up for Smartphone Users	697	1	3/60	35
	Second Web Survey Follow-up for Smartphone Users	592	1	3/60	30
Non-smartphone Users aged 18–65	First Text Message Survey Follow-up for non-Smartphone Users	200	1	3/60	10
	Second Text Message Survey Follow-up for non-Smartphone Users	170	1	3/60	9
Total					236

Kimberly Lane,

Reports Clearance Officer, Centers for Disease Control and Prevention.

[FR Doc. 2012–4549 Filed 2–24–12; 8:45 am]

BILLING CODE 4163–18–P

DEPARTMENT OF HEALTH AND HUMAN SERVICES

Centers for Disease Control and Prevention (CDC)

Advisory Board on Radiation and Worker Health (ABRWH or Advisory Board), National Institute for Occupational Safety and Health (NIOSH)

The meeting scheduled to convene on February 28–29, 2012 was published in the **Federal Register** on February 16, 2012, Volume 77, Number 32, Pages 9254–9255. This notice was put on display for 12 days in advance of the meeting instead of the 15 calendar days required in accordance with section 10(a)(2) of the Federal Advisory Committee Act (Pub. L. 92–463), and pursuant to the requirements of 42 CFR 83.15(a).

CONTACT PERSON FOR MORE INFORMATION: Theodore Katz, M.P.A., Executive Secretary, NIOSH, CDC, 1600 Clifton Road, NE., MS E–20, Atlanta, Georgia 30333, Telephone: (513) 533–6800, toll free: 1–800–CDC–INFO, email: *dcas@cdc.gov.*

The Director, Management Analysis and Services Office, has been delegated the authority to sign **Federal Register** notices pertaining to announcements of meetings and other committee management activities, for both the Centers for Disease Control and Prevention and the Agency for Toxic Substances and Disease Registry.

Dated: February 17, 2012.

Elaine L. Baker,

Director, Management Analysis and Services Office, Centers for Disease Control and Prevention.

[FR Doc. 2012–4569 Filed 2–24–12; 8:45 am]

BILLING CODE 4163–18–P

DEPARTMENT OF HEALTH AND HUMAN SERVICES

Food and Drug Administration

[Docket No. FDA–2011–N–0320]

Agency Information Collection Activities; Submission for Office of Management and Budget Review; Comment Request; Experimental Study on Consumer Responses to Whole Grain Labeling Statements on Food Packages

AGENCY: Food and Drug Administration, HHS

ACTION: Notice.

SUMMARY: The Food and Drug Administration (FDA) is announcing that a proposed collection of information has been submitted to the Office of Management and Budget (OMB) for review and clearance under the Paperwork Reduction Act of 1995.

DATES: Fax written comments on the collection of information by March 28, 2012.

ADDRESSES: To ensure that comments on the information collection are received, OMB recommends that written comments be faxed to the Office of Information and Regulatory Affairs, OMB, Attn: FDA Desk Officer, FAX: 202–395–7285, or emailed to *oira_submission@omb.eop.gov.* All comments should be identified with the OMB control number 0910–New and title ''Experimental Study on Consumer Responses to Whole Grain Labeling Statements on Food Packages.'' Please also include the FDA docket number found in brackets in the heading of this document.

FOR FURTHER INFORMATION CONTACT: Denver Presley, II, Office of Information Management, Food and Drug Administration, 1350 Piccard Dr., PI50–400B, Rockville, MD 20850, 301–796–3793.

SUPPLEMENTARY INFORMATION: In compliance with 44 U.S.C. 3507, FDA has submitted the following proposed collection of information to OMB for review and clearance.

Experimental Study on Consumer Responses to Whole Grain Labeling Statements on Food Packages—(OMB Control Number 0910–New)

I. Background

The Nutrition Labeling and Education Act, which amended the Federal Food, Drug, and Cosmetic Act, requires most foods to bear nutrition labeling (i.e., the Nutrition Facts) and requires food labels that bear nutrient content claims and certain health messages to comply with specific requirements. There are three different types of claims (health claims, nutrient content claims, and structure/function claims) that the food industry can voluntarily use on food labels. Although they are regulated differently, they all must be truthful and not misleading (Ref. 1).

In the past 30 years, whole-grain consumption has been greatly promoted by government agencies and scientific communities as an important part of a healthy diet (Refs. 2 and 3). For example, the newly released ''Dietary Guidelines for Americans 2010'' recommends Americans eat fewer refined grains and consume more nutrient-dense whole grains instead (Ref. 4). At the same time, whole grain labeling statements, such as ''Made With Whole Grain'', on food products have also become more prevalent in recent years (Ref. 5). Given the variety of whole-grain statements on food products and the importance of whole grains in maintaining a healthy diet, it is important for policy makers to gain a better understanding of how consumers interpret these statements.

Several studies indicate that consumers may have difficulties in understanding the meaning of whole grains or recognizing whole-grain foods (Refs. 6 to 8). Research also suggests consumer product perceptions and purchase decisions can be influenced by labeling statements, and different labeling statements may have different influences (Refs. 9 and 10). The majority of existing studies focus on whole grain intake or the relationships between whole grain and disease prevention. There is a lack of systematic investigation of consumers' understanding of different whole-grain labeling statements. We are aware of at least one existing study related to the statements (Ref. 11). However, the study did not compare consumer reactions to various whole-grain statements. Therefore, FDA, as part of its effort to promote public health, plans to use the proposed study to explore and compare consumer responses to food labels that use whole-grain labeling statements.

Specifically, the study plans to examine: (1) Consumer judgments about a food product including its nutritional attributes, overall healthiness, and health benefits; (2) consumer judgments about a labeling statement in terms of its credibility, helpfulness, and other attributes; (3) consumer interpretations of different terms and statements, such as ''Made with Whole Grain'', ''Multi-Grain'', and ''100% Whole Wheat''; (4) consumer extrapolation of whole grain statements beyond the scope of the statements themselves (i.e., halo effects);

and (5) how whole grain statements influence consumer use of the Nutrition Facts.

The proposed collection of information is a controlled randomized experimental study. The study will use a 15-minute Web-based survey to collect information from 2,700 English-speaking adult members of an online consumer panel maintained by a contractor. The study will aim to produce a sample that reflects the U.S. Census on gender, education, age, and ethnicity/race.

The study will randomly assign each participant to view one label image from a set of food labels that will be created for the study and systematically varied in the (1) whole grain labeling statement; (2) featured product (e.g., bread, salty snacks, and breakfast bars); (3) access to the Nutrition Facts label; and (4) nutritional profile (differing by the amount of fiber and the ranking order of whole grain products on the ingredient list). With regard to claims, the study will focus on examples of whole grain statements that can be found on food packages. All label images will be mock-ups resembling food labels that may be found in the marketplace. Images will show product identity (e.g., bread) but not any real or fictitious brand name. The study will provide half of the participants access to the Nutrition Facts but not together with a product image (i.e., these participants can look at the Nutrition Facts if they choose to). The study will show the other half of the respondents a label in which the Nutrition Facts is located next to the product image.

The survey will ask its participants to view label images and answer questions about their perceptions and reactions related to the product and claim. Product perceptions (e.g., healthiness, potential health benefits, levels of whole grains, and fiber amount) and label perceptions (e.g., helpfulness and credibility) will constitute the measures of response in the experiment. To help understand the data, the survey will also collect information about participants' backgrounds, such as consumption and purchase patterns, awareness and knowledge of nutrients and substances, and health status and demographic characteristics.

The study is part of the Agency's continuing effort to enable consumers to make informed dietary choices and construct healthful diets. Results of the study will be used primarily to enhance the Agency's understanding of how whole grains claims and other related labeling statements on food packages may affect how consumers perceive a product or a label, which may in turn affect their dietary choices. Results of the study will not be used to develop population estimates.

In the **Federal Register** of May 26, 2011 (76 FR 30725), FDA published a 60-day notice requesting public comment on the proposed collection of information. FDA received eight letters in response to the notice, each containing multiple comments. Several comments were generally supportive of FDA's study. Additional comments were outside the scope of the four collection of information topics on which the notice solicits comments and will not be discussed in this document. The comments on the four collection of information topics, and the Agency's responses, are discussed in the following paragraphs.

(Comment 1) One comment questioned the necessity of the study given FDA's many pressing responsibilities. The comment suggested that the ''Dietary Guidelines for Americans 2005'' and the prevalence of Whole Grain Stamps on products have increased consumer ability to understand the benefits of whole grains and to find and purchase them in stores.

(Response) FDA disagrees with this comment. Research suggests that although consumers may be aware of the benefits of whole grain foods, they still have difficulties in understanding the meaning of whole grains or recognizing whole grain foods (Refs. 6 through 8). Given the multitude of whole grain statements appearing in the marketplace and the importance of whole grains in maintaining a healthy diet, there is a genuine need for systematic investigation of how consumers interpret various whole-grain statements.

(Comment 2) Several comments suggested improvements to the proposed survey instrument. One comment questioned whether the terms ''healthiness'' and ''nutritional qualities'' should be equated to one another as in a proposed response item ''healthiness or nutritional qualities.'' A few comments noted that the scales of the ranking questions need to be revised from a four or six point scale to a five point scale with a ''neutral position'' (e.g., neither agree nor disagree). Several comments questioned whether a ''don't know'' choice should be included or omitted in several places. One comment suggested that the section on general knowledge of whole grains should be asked before questions on specific labels. One comment stated that the questions on evaluating the trustworthiness and helpfulness of the whole grain statement may be biased or leading because all the negative terms are placed on the left-hand side of the scale. Another comment stated that the perceptions of the claim statement may be confounded by product cues such as color and graphics.

(Response) FDA has carefully reviewed the survey instrument and has incorporated all necessary clarifications and improvements in response to the comments. In terms of the perceived connection between ''healthiness'' and ''nutritional qualities,'' FDA found in previous cognitive testing that some respondents understood nutritional qualities as an element of healthiness and equated the two concepts, as in ''healthiness or nutritional qualities.'' The testing also found that this expression performed best in respondent comprehension and in conveying the intent of the item, which is the nutritional aspect of health. Therefore, we have decided to retain the expression ''healthiness or nutritional qualities.'' Regarding inclusion of a ''neutral'' (neither agree nor disagree) response in the rating scales, research (e.g., Ref. 12) has suggested that such a response can be interpreted as a ''don't know'' response by some respondents. Therefore, we have kept the six point rating scale and added a ''don't know'' option. Questions whose response options purposefully omit a ''don't know'' option will be further evaluated in the cognitive interviews to confirm that participants are able to select one of the provided choices. Regarding the order of the general knowledge and label response sections, we disagree with the suggestion and believe the suggested change would create more biases than the current order. We also disagree that claim perceptions may be biased because negative terms are placed on the left-hand side of the scale. Existing research has not produced consensus about whether placing negative or positive terms at the beginning of a scale is more likely to cause biases. More importantly, because this is an experimental study that employs random assignment, bias is irrelevant as we are mainly interested in quantitative differences in dependent measures between tested stimuli (e.g., claims). We agree that product cues may make it difficult to isolate the impact of whole grain claims. For this reason, the study has created mock-up labels that do not include real or fictitious brand names and only resemble, but are not identical to, real packages. Moreover, the study will compare responses to labels that differ only in the presence or absence of a claim, and in the claim language, but not in any other respect.

(Comment 3) One comment suggested that FDA should clearly define in the

study concepts such as ''whole grains'', ''foods made from whole grains'', and ''whole grain food'' when asking about whole grain consumption.

(Response) We disagree with this suggestion. How consumers interpret these labeling statements is the core question that FDA is interested in answering and clear definitions would defeat this purpose. In the modified version of our questionnaire, we have provided specific examples of whole grain products (such as cereal or bread, pasta that are made with whole grains) when we ask participants about their whole grain consumption patterns.

(Comment 4) One comment proposed revising a question in the survey that is intended to assess potential consumer confusion about the meaning of organic versus whole grain. The question we proposed asked participants to judge the likelihood that a product is organic based on the information shown on the experimental label stimuli.

(Response) The question FDA originally proposed (how likely a product shown in the survey is organic) has been removed from the revised questionnaire. Instead, we have added a new question that asks whether respondents think the statement ''All whole grain foods are organic'' is true or false.

(Comment 5) One comment stated that consumers do not understand ''ounce-equivalents'' when trying to answer the whole grain consumption questions. The comment suggested using grams or servings as a measurement of whole grain, or other basic descriptions of amounts as included in the ''Dietary Guidelines for Americans'' or MyPlate (e.g., half of the grains you consume, half of a plate).

(Response) We agree that consumers are probably more familiar with measurements expressed in servings or grams than with measurements expressed in ounce-equivalents and have replaced ounce-equivalents with servings or grams in the study. Also, we have removed the question about whether consumers are aware of the recommended amount of whole grains they should consume according to the Dietary Guidelines for Americans because respondents may not know details in the ''Dietary Guidelines for Americans'' or MyPlate.

(Comment 6) One comment suggested that FDA should incorporate the three standards listed in the ''Dietary Guidelines for Americans 2010'' (''look for 100% whole grain foods''; ''look for products using the FDA whole grain health claim''; ''look for products with at least 8 grams of whole grain'') into the study to see whether consumers can use them to seek out whole grains.

(Response) We agree that this information is useful and have included these standards in the study. We will examine how well respondents understand them and whether they can evaluate the amount of whole grain in a certain food based on the claim on the front of the food package and the Nutrition Facts and the ingredient list on the back.

(Comment 7) One comment suggested that FDA add a variety of grains and more non-wheat-based foods (e.g., brown rice, oatmeal, and popcorn) to see if consumers understand these are whole grain foods. The same comment also suggested FDA include more foods lower in overall grain content than the three planned (bread, cereal, breakfast bars), as these are likely to be high in grain content.

(Response) We agree with the comment and have included bread, salty snacks (instead of cereal), and breakfast bars in the study.

(Comment 8) One comment suggested that FDA add more questions on participants' consumption, purchases of the food categories studied, and health and nutrition attitude questions. The comment also suggested that FDA explore consumers' understanding of whole grains relative to consumers' understanding of other aspects of a healthy diet, such as consumption of leafy green vegetables or legumes. The comment stated that the information can help reveal whether consumer knowledge about dietary practices other than whole grain consumption might require greater Agency resources and attention.

(Response) We have added questions on participants' consumption and purchase of the food categories that will be studied (bread, breakfast bars, and salty snacks). Due to resource limitations, we will not be able to ask additional questions about participants' understanding of other aspects of a healthy diet or expand the study to include a larger group of foods.

(Comment 9) One comment suggested that, in addition to testing two nutritional profiles for a given product (one high in fiber amount and one low in fiber amount), the study should include at least one product that provides a good source of fiber.

(Response) We agree that the suggested addition will increase our understanding of consumer reactions to products with various fiber contents. We have included three types of foods: Bread, breakfast bars, and salty snacks (instead of cereal), each with two nutritional profiles (one high in fiber amount and one low in fiber amount) in the study. Bread usually provides a good source of fiber.

(Comment 10) One comment suggested that, because the focus of the proposed research is on interpretation of whole grain label statements, the data analysis should treat the label statements as fixed effects and the product categories and nutrition profiles as random effects.

(Response) We will consider the need and appropriateness of the suggested analytic approach during data analysis.

(Comment 11) Several comments urged FDA to provide graphics and revised instruments in the 30-day notice for public comment.

(Response) We agree and have included these materials in the information collection request.

(Comment 12) One comment encouraged FDA to revise its draft guidance to provide clear guidance to industry as to the types of claims that may be made about whole grains and also to limit whole grain claims to foods that provide at least a good source of fiber (10% Daily Value) for foods with a mid to large size Reference Amount Customarily Consumed (RACC), such as those associated with ready-to-eat cereals.

(Response) The comment is outside of the scope of the proposed collection of information described in the 60-day notice and therefore is not addressed here. Nonetheless, the comment has been forwarded to the docket for the whole grain draft guidance.

FDA estimates the burden of this collection of information as follows (Table 1). FDA plans to conduct cognitive interviews by screening 72 panelists in order to obtain 9 individuals for cognitive interviews. Each screening is expected to take 5 minutes (0.083 hour), and each cognitive interview is expected to take 1 hour. The total for cognitive interview activities is 15 hours (6 hours + 9 hours). Subsequently, we plan to screen 1,152 individuals for pretest, each taking 2 minutes (0.033 hours), in order to have 576 of them complete a 15-minute (0.25 hours) pretest. The 576 target responses are 376 more than the 200 target responses described in the 60-day notice. The change is because we increased the number of our experimental conditions from 156 to 288, and we wanted to ensure two responses per experimental condition (288 * 2). Thus, the total for the pretest activities is 182 hours (38 hours + 144 hours). For the survey, we estimate that 5,400 invitations, each taking 2 minutes (0.033 hours), will need to be sent to adult members of an online consumer

panel to have 2,700 of them complete a 15-minute (0.25 hours) questionnaire. The total for the survey activities is 855 hours (180 hours + 675 hours). Therefore, the total estimated burden is 1,052 hours. This estimate is 454 hours lower than the 1,506 hours described in the 60-day notice and reflects 15 fewer hours for pretest invitation, 533 fewer hours for survey invitation, and 94 more hours for the pretest, respectively. Recent experience by our contractor suggests that the Agency will not need to send as many invitations as originally estimated to achieve its target sample sizes in pretest and survey. FDA's burden estimate is based on prior experience with research that is similar to this proposed study.

TABLE 1—ESTIMATED ANNUAL REPORTING BURDEN [1]

Activity	Number of respondents	Number of responses per respondent	Total annual responses	Average burden per response	Total hours
Cognitive interview screener	72	1	72	0.083 (5 minutes)	6
Cognitive interview	9	1	9	1 hour	9
Pretest invitation	1,152	1	1,152	0.033 (2 minutes)	38
Pretest	576	1	576	0.25 (15 minutes)	144
Survey invitation	5,400	1	5,400	0.033 (2 minutes)	180
Survey	2,700	1	2,700	0.25 (15 minutes)	675
Total					1,052

[1] There are no capital costs or operating and maintenance costs associated with this collection of information.

II. References

The following references are on display in the Division of Dockets Management (HFA–305), Food and Drug Administration, 5630 Fishers Lane, Rm. 1061, Rockville, MD 20857, under Docket No. FDA–2011–N–0320 and may be seen by interested persons between 9 a.m. and 4 p.m., Monday through Friday. We have verified all Web site addresses, but we are not responsible for any subsequent changes to the Web sites after this document publishes in the **Federal Register**.

1. U.S. Food and Drug Administration, ''Claims That Can Be Made for Conventional Foods and Dietary Supplements,'' September 2003, available at *http://www.fda.gov/Food/LabelingNutrition/LabelClaims/ucm111447.htm.*
2. Cleveland, L.E., A.J. Moshfegh, A.M. Albertson, et al., ''Dietary Intake of Whole Grains,'' *Journal of the American College of Nutrition,* vol. 19, pp. 331S–338S, 2000.
3. Kantor, L.S., J.N. Variyam, J.E. Allshouse, et al., ''Choose a Variety of Grains Daily, Especially Whole Grains: A Challenge for Consumers,'' *Journal of Nutrition,* vol. 131, pp. 473S–486S, 2001.
4. U.S. Department of Agriculture and U.S. Department of Health and Human Services, ''Executive Summary of Dietary Guidelines for Americans, 2010,'' January 2011, available at *http://www.cnpp.usda.gov/Publications/DietaryGuidelines/2010/PolicyDoc/ExecSumm.pdf.*
5. *Supermarket News,* ''Report: Whole Grains Gain Momentum,'' September 17, 2010, available at *http://supermarketnews.com/news/whole_grains_0917/#.*
6. Arvola, A., L. Lähteenmäki, M. Dean, et al., ''Consumers' Beliefs About Whole and Refined Grain Products in the UK, Italy and Finland,'' *Journal of Cereal Science,* vol. 46, pp. 197–206, 2007.
7. Kantor, L.S., J.N. Variyam, J.E. Allshouse, et al., ''Choose a Variety of Grains Daily, Especially Whole Grains: A Challenge for Consumers,'' *Journal of Nutrition,* vol. 131, pp. 473S–486S, 2001.
8. Marquart, L., K.L. Wiemer, J.M. Jones, et al., ''Whole Grain Health Claims in the USA and Other Efforts to Increase Whole-Grain Consumption,'' *Proceedings of the Nutrition Society,* vol. 62, pp. 151–160, 2003.
9. Drichoutis, A.C., P. Lazaridis, and R.M. Nayga, ''Consumers' Use of Nutritional Labels: A Review of Research Studies and Issues,'' *Academy of Marketing Science Review,* vol. 10.9, 2006.
10. Grunert, K.G. and J.M. Willis, ''A Review of European Research on Consumer Response to Nutrition Information on Food Labels,'' *Journal of Public Health,* vol. 15, pp. 384–399, 2007.
11. Kellogg Company. ''A Survey of Consumers' Whole Grain & Fiber Consumption Behaviors, and the Perception of Whole Grain Foods as a Source of Dietary Fiber,'' 2010. FDA Docket No. 2006–D–0298. July 2010, available at *http://www.regulations.gov/#!document Detail;D=FDA–2006–D–0298–0016.*
12. Clark, L.A. and D. Watson, ''Constructing Validity: Basic Issues in Objective Scale Development,'' *Psychological Assessment,* vol. 7(3), pp. 309–319, 1995.

Dated: February 21, 2012.

Leslie Kux,

Acting Assistant Commissioner for Policy.

[FR Doc. 2012–4423 Filed 2–24–12; 8:45 am]

BILLING CODE 4160–01–P

DEPARTMENT OF HEALTH AND HUMAN SERVICES

Food and Drug Administration

[Docket No. FDA–2012–D–0140]

Draft Guidance for Industry on Notification to Food and Drug Administration of Issues That May Result in a Prescription Drug Shortage; Availability

AGENCY: Food and Drug Administration, HHS.

ACTION: Notice; request for comments.

SUMMARY: The Food and Drug Administration (FDA) is announcing the availability of a draft guidance for industry entitled ''Notification to FDA of Issues that May Result in a Prescription Drug or Biological Product Shortage.'' This draft guidance relates to the Federal Food, Drug, and Cosmetic Act (FD&C Act), which requires sole manufacturers to notify FDA of a discontinuance of certain drug products and to the President's Executive Order 13588 of October 31, 2011, directing FDA to use all available administrative tools to expand the Agency's efforts to combat the problem of drug shortages. We are also requesting responsive comments from interested stakeholders on a specific question posed in this **Federal Register** document related to the draft guidance.

DATES: Although you can comment on any guidance at any time (see 21 CFR 10.115(g)(5)), to ensure that the Agency considers your comment on this draft guidance before it begins work on the final version of the guidance, submit either electronic or written comments on the draft guidance by May 29, 2012.

Submit either electronic or written comments concerning the proposed collection of information by April 27, 2012.

ADDRESSES: Submit written requests for single copies of the draft guidance to the Division of Drug Information, Center for Drug Evaluation and Research (CDER), Food and Drug Administration, 10903 New Hampshire Ave., Bldg. 51, rm. 2201, Silver Spring, MD 20993–0002 or to the Office of Communication, Outreach and Development (HFM–40), Center for Biologics Evaluation and Research (CBER), Food and Drug Administration, 1401 Rockville Pike, suite 200N, Rockville, MD 20852–1448. Send one self-addressed adhesive label to assist the office in processing your request. The guidance may also be obtained by mail by calling CDER at 301–796–3400 or CBER at 1–800–835–4709 or 301–827–1800. See the **SUPPLEMENTARY INFORMATION** section for electronic access to the draft guidance document.

Submit electronic comments to *http://www.regulations.gov.* Submit written comments on the draft guidance to the Division of Dockets Management (HFA–305), Food and Drug Administration, 5630 Fishers Lane, rm. 1061, Rockville, MD 20852.

FOR FURTHER INFORMATION CONTACT:

Kalah Auchincloss, Center for Drug Evaluation and Research, Food and Drug Administration, 10903 New Hampshire Ave., Bldg. 51, rm. 6208, Silver Spring, MD 20993, 301–796–0659; or

Stephen Ripley, Center for Biologics Evaluation and Research, Food and Drug Administration, 1401 Rockville Pike, Rockville, MD 20852–1448, 301–827–6210.

SUPPLEMENTARY INFORMATION:

I. Background

FDA is concerned about the rising incidence of drug shortages in the United States, particularly those involving drugs that are manufactured by a small number of firms and for which no good therapeutic substitutes are available. The number of drug shortages has been rising steadily over the last 5 years, tripling from 61 in 2005 to 178 in 2010. In 2011, FDA tracked over 250 drug shortages. Some of these shortages delay or deny needed care for patients since they involve critical drugs used to treat cancer, to fight infectious diseases, to provide required nutrition, or to address other serious medical conditions. Other shortages force providers to prescribe second-line alternatives, which can be less effective and higher risk than first-line therapies.

Under section 506C of the FD&C Act (21 U.S.C. 356c), sole manufacturers are *required* to report to FDA discontinuances of drug products that are life-supporting, life-sustaining, or intended for use in the prevention of a debilitating disease or condition and that are approved under a new drug application (NDA) or abbreviated new drug application (ANDA). On October 31, 2011, FDA sent a letter to manufacturers reminding them of their mandatory reporting requirements under section 506C of the FD&C Act and encouraging them to *voluntarily* notify the Agency of potential disruptions to supply of a prescription product that could lead to a product shortage, even beyond those instances that are required to be reported by statute. On the same day, the President issued Executive Order 13588 directing FDA to use all available administrative tools to expand its efforts to combat the problem of drug shortages.

FDA recognizes that some shortages can be neither predicted nor prevented; however, we know that effective communication and early notification from manufacturers has a significant impact on the incidence and duration of shortages. Manufacturers can play a critical role in decreasing the impact of shortages by reporting to the FDA circumstances that might affect their ability to supply the market and potentially lead to a product shortage. Notifying FDA in advance of incidents that may result in a shortage helps FDA work with manufacturers to take early action to prevent or alleviate shortages. For example, in 2011, early notification by manufacturers allowed FDA to help prevent shortages of 195 drugs, including 86 drugs produced by one company. However, as the President recognized in the Executive Order, FDA cannot begin to work with manufacturers or use tools at our disposal to avoid or mitigate a shortage until we know there is a potential problem.

There is no single, or simple, solution that can resolve the drug shortage problem, but we are committed to working with manufacturers, distributors, health care providers, and other stakeholders to identify the issues that can lead to shortages, to establish processes to avoid or mitigate critical shortages in the future, and to ensure continued patient access to vital safe and effective products. As part of this effort, we are issuing this guidance to help manufacturers better understand mandatory reporting obligations, to encourage voluntary reporting of additional issues that could lead to a shortage or disruption in supply of a drug or biological product, and to address other issues, such as quality control and contingency planning related to product shortages or potential disruption in supply.

This draft guidance is being issued consistent with FDA's good guidance practices regulation (21 CFR 10.115). The draft guidance, when finalized, will represent the Agency's current thinking on required and voluntary notifications to FDA of issues related to product shortages. It does not create or confer any rights for or on any person and does not operate to bind FDA or the public. An alternative approach may be used if such approach satisfies the requirements of the applicable statutes and regulations.

II. Request for Information

To assist us in finalizing guidance on drug shortages, FDA is seeking information and comments on the draft guidance from interested stakeholders. Although we welcome comment on any aspect of the draft guidance, we are particularly interested in obtaining information and comment regarding the appropriate scope of voluntary reporting of disruptions that may lead to a product shortage or potential disruption in supply. Specifically, please comment on whether manufacturers of *all* prescription drug and biological products should be encouraged to notify FDA of issues that may lead to a product shortage or potential disruption in supply. In your comments, please indicate whether the Agency should encourage voluntary reporting with regard to only a certain subset of prescription drug and biological products and, if so, please describe the products.

The comment period for the related interim final rule (IFR) on drug shortages published in the **Federal Register** of December 19, 2011 (76 FR 78530), and effective January 18, 2012, closed on February 17, 2012. Please do not submit comments on the IFR to the docket for the draft guidance; we will not consider comments on the IFR submitted to the docket for the draft guidance.

III. Paperwork Reduction Act of 1995

Under the Paperwork Reduction Act of 1995 (the PRA) (44 U.S.C. 3501–3520), Federal Agencies must obtain approval from the Office of Management and Budget (OMB) for each collection of information that they conduct or sponsor. ''Collection of information'' is defined in 44 U.S.C. 3502(3) and 5 CFR 1320.3(c) and includes Agency requests or requirements that members of the public submit reports, keep records, or

provide information to a third party. Section 3506(c)(2)(A) of the PRA, 44 U.S.C. 3506(c)(2)(A), requires Federal Agencies to provide a 60-day notice in the **Federal Register** for each proposed collection of information before submitting the collection to OMB for approval. To comply with this requirement, FDA is publishing this notice of the proposed collection of information set forth in this document.

With respect to the collection of information associated with this draft guidance, FDA invites comments on the following topics: (1) Whether the proposed information collected is necessary for the proper performance of FDA's functions, including whether the information will have practical utility; (2) the accuracy of FDA's estimated burden of the proposed information collected, including the validity of the methodology and assumptions used; (3) ways to enhance the quality, utility, and clarity of the information collected; and (4) ways to minimize the burden of information collected on the respondents, including through the use of automated collection techniques, when appropriate, and other forms of information technology.

The draft guidance provides information on the requirements for notification to FDA of a discontinuance of certain drug products under section 506C of the FD&C Act as implemented by 21 CFR 314.81(b)(3)(iii) and 314.91, and also reflects amendments to the implementing regulations published in the **Federal Register** as an IFR on December 19, 2011 and effective January 18, 2012. The draft guidance also provides information to industry on voluntarily notifying FDA of other issues that may result in a shortage or disruption in supply of a prescription drug or biological product in the U.S. market. In addition, the draft guidance encourages manufacturers to make contingency plans for responding to situations that could lead to a drug or biological product shortage or potential disruption in supply. The draft guidance is intended for manufacturers of prescription drug and biological products regulated by CDER or CBER.

The burden analysis for the information collection resulting from the mandatory notification requirements under section 506C of the FD&C Act, as implemented by §§ 314.81(b)(3)(iii) and 314.91, and from the implementing regulations in the December 19, 2011, IFR, was submitted to OMB for emergency review under the PRA on December 21, 2011 (see ''V. Paperwork Reduction Act of 1995'' at 76 FR 78537). OMB has approved this information collection under OMB control number 0910–0699. A discussion of the scope and logistics of mandatory notification under section 506C of the FD&C Act and the IFR is found in section III of the draft guidance.

Under section IV of the draft guidance, manufacturers of all prescription drug and biological products are encouraged to voluntarily notify FDA of issues that may result in a shortage of a product in the U.S. market or a potential disruption in supply. Voluntary notification of issues that may lead to a potential shortage or disruption in supply includes reporting of circumstances beyond those instances that are required to be reported by section 506C, and includes the following:

- Product quality problems, such as the presence of particulates or impurities, microbial contamination, and stability concerns;
- Interruptions or other adjustments in manufacturing that may adversely affect market supply, such as routine maintenance, that may temporarily halt production or renovation of manufacturing facilities;
- Delays in acquiring critical raw materials or components, or loss of raw material or components supplier (e.g. vials, stoppers, bottles);
- Transfer of manufacturing to an alternate facility (e.g. due to loss of an existing manufacturing site or to add additional capacity);
- Loss of a production line or production capacity (e.g., machinery failure or malfunction or quality issues related to a cell line);
- Any production problems that occur during or after manufacturing that could result in supply disruptions (e.g. out of specification test results, stability problems, or labeling and packaging defects);
- Import delays (e.g. shipments detained upon entry to the United States for any reason that may delay delivery to the manufacturing firm);
- Unexpected increases in demand (e.g. due to a shortage of an alternative product); and
- Product discontinuances (e.g. a business decision to stop manufacturing or marketing the product or a temporary product hold while investigating issues that may result in a recall), even if you are not a sole manufacturer or the product in question is not subject to section 506C.

Based on the number of shortages we have seen during the past 12 months, we estimate that annually a total of approximately 480 manufacturers (''number of respondents'' in table 1 of this document) will voluntarily notify us of issues that may result in a shortage or potential disruption in supply of a drug or biological product, as described previously. We estimate that these manufacturers will submit annually a total of approximately 480 notifications (''total annual responses'' in table 1 of this document). We also estimate that preparing and submitting this information to us will take approximately 2 hours per manufacturer (''hours per response'' in table 1 of this document), including the time that some manufacturers may need to prepare information and take remedial steps in response to follow up questions and other action from FDA, as described in section V of the draft guidance. We base this estimate on our experience with the reporting of similar information to FDA, including mandatory reporting under section 506C of the FD&C Act of discontinuance of manufacturing of a sole source drug that is life-supporting, life-sustaining, or intended for use in the prevention of a serious disease or condition, and from the increase in voluntary notifications received since publication on October 31, 2011, of the letter to manufacturers requesting such reports.

Under section VI of the draft guidance, manufacturers are encouraged to engage in quality control, risk-management, and contingency planning for responding to situations that could lead to a drug or biological product shortage or potential disruption in supply. The draft guidance explains that contingency plans should cover additional manufacturing sites, production lines, and suppliers, such as building redundancy into manufacturing capabilities or providing for additional suppliers under the NDA, ANDA, and BLA processes. The plans may need to identify alternative API and component suppliers and/or have redundant manufacturing capacity registered and in compliance with current good manufacturing practices under 21 CFR parts 210 and 211.

In table 2 of this document, we estimate that a total of approximately 70 manufacturers (''number of recordkeepers'' in table 2 of this document) will prepare contingency plans for responding to situations that could lead to a product shortage or potential disruption in supply, as described above. We estimate that these manufacturers will prepare a total of approximately 70 contingency plans (''total records'' in table 2 of this document). We also estimate that preparing and maintaining each contingency plan will take approximately 500 hours per manufacturer (''average burden per recordkeeping'' in table 2 of this

document). We base this estimate on our experience with related contingency planning under the draft guidance for industry entitled: ''Planning for the Effects of High Absenteeism to Ensure Availability of Medically Necessary Drug Products'' (Absenteeism Draft Guidance) published in the **Federal Register** of January 8, 2010 (75 FR 1060), and October 18, 2010 (75 FR 63832), and the public comments we received on our burden estimate for that guidance. The Absenteeism Draft Guidance recommends that drug and biological product manufacturers develop written plans to maintain an adequate supply of medically necessary products during an emergency that results in high employee absenteeism. Although the draft guidance that is the subject of this **Federal Register** document is not related to employee absenteeism, the two guidance documents apply to a similar group of manufacturers and we believe the contingency plans recommended in both draft guidance documents will include similar elements. Accordingly, we believe the burden estimates from the Absenteeism Draft are relevant to this draft guidance. However, we specifically request comment on these contingency plan burden hour estimates.

FDA estimates the burden of this collection of information as follows:

TABLE 1—ESTIMATED REPORTING BURDEN [1]

	Number of respondents	Number of responses per respondent	Total annual responses	Hours per response	Total hours
Voluntary Reporting Under Section IV of the Draft Guidance	480	1	480	2	960
Total					960

[1] There are no capital costs or operating and maintenance costs associated with this information collection.

TABLE 2—ESTIMATED RECORDKEEPING BURDEN [1]

	Number of recordkeepers	Number of records per recordkeeper	Total records	Average burden per recordkeeping (in hours)	Total hours
Voluntary Contingency Plans Under Section VI of the Draft Guidance	70	1	70	500	35,000
Total					35,000

[1] There are no capital costs or operating and maintenance costs associated with this information collection.

IV. Comments

Interested persons may submit to the Division of Dockets Management (see **ADDRESSES**) either written or electronic comments regarding this document. It is only necessary to send one set of comments. Identify comments with the docket number found in brackets in the heading of this document. Received comments may be seen in the Division of Dockets Management between 9 a.m. and 4 p.m., Monday through Friday.

V. Electronic Access

Persons with access to the Internet may obtain the document at *http://www.fda.gov/Drugs/GuidanceComplianceRegulatoryInformation/Guidances/ucm121568.htm, http://www.fda.gov/cber/guidelines.htm,* or *http://www.regulations.gov.*

Dated: February 22, 2012.

Leslie Kux,

Acting Assistant Commissioner for Policy.

[FR Doc. 2012–4439 Filed 2–24–12; 8:45 am]

BILLING CODE 4160–01–P

DEPARTMENT OF HEALTH AND HUMAN SERVICES

Food and Drug Administration

[Docket No. FDA–2012–D–0080]

Draft Guidance on Food and Drug Administration Oversight of Positron Emission Tomography Drug Products—Questions and Answers; Availability

AGENCY: Food and Drug Administration, HHS.

ACTION: Notice.

SUMMARY: The Food and Drug Administration (FDA) is announcing the availability of a draft guidance entitled ''FDA Oversight of PET Drug Products—Questions and Answers.'' The draft guidance provides questions and answers that address nearly all aspects of the FDA approval and surveillance processes, including application submission, review, compliance with good manufacturing practices, inspections, registration and listing, and user fees.

DATES: Although you can comment on any guidance at any time (see 21 CFR 10.115(g)(5)), to ensure that the Agency considers your comment on this draft guidance before it begins work on the final version of the guidance, submit either electronic or written comments on the draft guidance by May 29, 2012.

ADDRESSES: Submit written requests for single copies of the draft guidance to the Division of Drug Information, Center for Drug Evaluation and Research, Food and Drug Administration, 10903 New Hampshire Ave., Bldg. 51, rm. 2201, Silver Spring, MD 20993–0002. Send one self-addressed adhesive label to assist that office in processing your requests. See the **SUPPLEMENTARY INFORMATION** section for electronic access to the draft guidance document.

Submit electronic comments on the draft guidance to *http://www.regulations.gov.* Submit written comments to the Division of Dockets Management (HFA–305), Food and Drug Administration, 5630 Fishers Lane, rm. 1061, Rockville, MD 20852.

FOR FURTHER INFORMATION CONTACT: Elizabeth Giaquinto, Center for Drug Evaluation and Research, Food and Drug Administration, 10903 New Hampshire Ave. Bldg. 51, rm. 6164,

Silver Spring, MD 20993–0002, 301–796–3416.

SUPPLEMENTARY INFORMATION:

I. Background

FDA is announcing the availability of a draft guidance entitled ''FDA Oversight of PET Drug Products—Questions and Answers.'' In 1997, Congress passed the Food and Drug Administration Modernization Act (the Modernization Act) (Pub. L. 105–115). Section 121 of the Modernization Act directed FDA to establish appropriate approval procedures and current good manufacturing practices (CGMP) for PET drugs. The procedures were finalized and an implementation timeline was instituted on December 10, 2009, when FDA published regulations that described the minimum CGMP standards that each PET drug manufacturer is to follow during the production of a PET drug (see part 212 (21 CFR part 212)).[1] Under the requirements of section 121 of the Modernization Act, within 2 years following that publication date, a new drug application (NDA) or abbreviated new drug application (ANDA) must be submitted for any PET drug marketed for clinical use in the United States.

Recognizing that many PET drug producers are unfamiliar with the drug approval process, FDA issued the guidance entitled PET Drug Applications—Content and Format for NDAs and ANDAs,[2] and held a public meeting in March 2011 to assist applicants in preparing NDAs and ANDAs for the three most commonly used PET drugs. Numerous questions have been raised since that public meeting on all aspects of FDA oversight of PET drugs. This draft guidance is being issued to respond to the questions that have been submitted to date, and it will be revised periodically to respond to additional questions that have been submitted and are expected to be submitted in the future.

This draft guidance is being issued consistent with FDA's good guidance practices regulation (21 CFR 10.115). The draft guidance, when finalized, will represent the Agency's current thinking on the FDA oversight of PET drugs. It does not create or confer any rights for or on any person and does not operate to bind FDA or the public. An alternative approach may be used if such approach satisfies the requirements of the applicable statutes and regulations.

II. Comments

Interested persons may submit to the Division of Dockets Management (see **ADDRESSES**) either electronic or written comments regarding this document. It is only necessary to send one set of comments. Identify comments with the docket number found in brackets in the heading of this document. Received comments may be seen in the Division of Dockets Management between 9 a.m. and 4 p.m., Monday through Friday.

III. Paperwork Reduction Act of 1995

This draft guidance refers to previously approved collections of information found in FDA regulations. These collections of information are subject to review by the Office of Management and Budget (OMB) under the Paperwork Reduction Act of 1995 (44 U.S.C. 3501–3520). The collections of information in 21 CFR part 314 were approved under OMB control numbers 0910–0001 and 0910–0338; the collections of information in 21 CFR part 312 were approved under OMB control number 0910–0014; the collections of information in part 212 were approved under OMB control number 0910–0667; the collections of information in 21 CFR parts 210 and 211 were approved under 0910–0139; and the collections of information in 21 CFR part 207 were approved under OMB control number 0910–0445. The draft guidance also refers to collections of information associated with submitting Form FDA 3397 (Prescription Drug User Fee Cover Sheet), approved under OMB control number 0910–0297.

IV. Electronic Access

Persons with access to the Internet may obtain the document at either *http://www.fda.gov/Drugs/GuidanceComplianceRegulatoryInformation/Guidances/default.htm* or *http://www.regulations.gov.*

Dated: February 21, 2012.

Leslie Kux,

Acting Assistant Commissioner for Policy.

[FR Doc. 2012–4427 Filed 2–24–12; 8:45 am]

BILLING CODE 4160–01–P

[1] The regulation, CGMP guidance, and supportive information, including historical documents, are available at *http://www.fda.gov/Drugs/DevelopmentApprovalProcess/Manufacturing/ucm085783.htm.*

[2] We update guidances periodically. To make sure you have the most recent version of a guidance, check FDA's Drugs guidance Web page at: *http://www.fda.gov/Drugs/GuidanceComplianceRegulatoryInformation/Guidances/default.htm.*

DEPARTMENT OF HEALTH AND HUMAN SERVICES

Food and Drug Administration

[Docket No. FDA–2010–N–0621]

Final Decision on Withdrawal of Breast Cancer Indication for AVASTIN (Bevacizumab) Following Public Hearing; Availability

AGENCY: Food and Drug Administration, HHS.

ACTION: Notice.

SUMMARY: The Food and Drug Administration (FDA) is announcing the availability of the final decision withdrawing approval of the breast cancer indication for AVASTIN (Bevacizumab). The Commissioner of Food and Drugs (the Commissioner) issued the decision following a June 2011 public hearing on a proposal to withdraw the approval.

DATES: Withdrawal of AVASTIN's breast cancer indication was effective November 18, 2011.

ADDRESSES: Submit written requests for single copies of the decision to the Division of Drug Information, Center for Drug Evaluation and Research, Food and Drug Administration, 10903 New Hampshire Ave., Bldg. 51, Rm. 2201, Silver Spring, MD 20993–0002. The final decision, hearing transcript, and other documents may be seen in the Division of Dockets Management (HFA–305), Food and Drug Administration, 5630 Fishers Lane, Rm. 1601, Rockville, MD 20852. See the **SUPPLEMENTARY INFORMATION** section for electronic access to the decision and related documents.

FOR FURTHER INFORMATION CONTACT: Sharon Sickafuse, Center for Drug Evaluation and Research, Food and Drug Administration, 10903 New Hampshire Ave., Silver Spring, MD 20993–0002, 301–796–2320.

SUPPLEMENTARY INFORMATION:

I. Background

On February 22, 2008, FDA's Center for Drug Evaluation and Research (CDER) approved a supplemental biologics license application (sBLA 125085/91) submitted by Genentech, Inc. (Genentech), for the use of AVASTIN in combination with paclitaxel for patients who have not received chemotherapy for treatment of HER2-negative metastatic breast cancer (MBC). This approval was issued under the Agency's accelerated approval regulations for biological products, 21 CFR part 601, subpart E. Consistent with those regulations, the approval was

subject to the requirement that the product be studied further to verify and describe its clinical benefit. On November 16, 2009, Genentech submitted the results of two clinical trials intended to satisfy this requirement. CDER determined that these trials failed to verify AVASTIN's clinical benefit in the treatment of MBC and on December 16, 2010, issued a notice of opportunity for a hearing to Genentech proposing to withdraw approval of AVASTIN's MBC indication. Genentech submitted a hearing request dated December 23, 2010, followed by a submission of data and information on which it would rely at a hearing. The Agency granted Genentech's hearing request and published a notice of hearing on May 11, 2011 (76 FR 27332). The hearing was held on June 28 and 29, 2011. Following the hearing, on November 18, 2011, the Commissioner issued a final decision withdrawing approval of AVASTIN's MBC indication.

II. Electronic Access

Persons with access to the Internet may obtain the final decision at *http://www.fda.gov/downloads/NewsEvents/Newsroom/UCM280546.pdf.* The final decision, a transcript of the hearing, and other documents pertaining to the withdrawal of Avastin's MBC indication are available at *http://www.regulations.gov* under the docket number found in brackets in the heading of this document.

Dated: February 21, 2012.

Leslie Kux,

Acting Assistant Commissioner for Policy.

[FR Doc. 2012–4424 Filed 2–24–12; 8:45 am]

BILLING CODE 4160–01–P

DEPARTMENT OF HEALTH AND HUMAN SERVICES

Food and Drug Administration

[Docket No. FDA–2009–D–0605]

Guidance for Institutional Review Boards, Clinical Investigators, and Sponsors: Institutional Review Board Continuing Review After Clinical Investigation Approval; Availability

AGENCY: Food and Drug Administration, HHS.

ACTION: Notice.

SUMMARY: The Food and Drug Administration (FDA) is announcing the availability of a guidance entitled, ''Guidance for IRBs, Clinical Investigators, and Sponsors: IRB Continuing Review after Clinical Investigation Approval.'' The guidance announced in this document finalizes the draft guidance of the same title dated January 2010. This document also supersedes the Information Sheet, Continuing Review After Study Approval. The guidance is intended to assist institutional review boards (IRBs) in carrying out their continuing review responsibility by providing recommendations regarding the criteria, process, and frequency of continuing review to assure the protection of the rights and welfare of subjects in clinical investigations.

DATES: Submit either electronic or written comments at any time. Submit electronic comments to *http://www.regulations.gov.* Submit written comments on the guidance to the Division of Dockets Management (HFA–305), Food and Drug Administration, 5630 Fishers Lane, Rm. 1061, Rockville, MD 20852. See the **SUPPLEMENTARY INFORMATION** section for electronic access to the guidance document.

ADDRESSES: Submit written requests for single copies of this guidance to the Division of Drug Information, Center for Drug Evaluation and Research (CDER), Food and Drug Administration, 10903 New Hampshire Ave., Bldg. 51, Rm. 2201, Silver Spring, MD 20993–0002 (1–888–463–6332 or 301–796–3400); or the Office of Communication, Outreach and Development (HFM–40), Center for Biologics Evaluation and Research (CBER), Food and Drug Administration, 1401 Rockville Pike, Suite 200N, Rockville, MD 20852–1448 (1–800–835–4709 or 301–827–1800); or the Division of Small Manufacturers, International, and Consumer Assistance, Center for Devices and Radiological Health (CDRH), Food and Drug Administration, 10903 New Hampshire Ave., Bldg. 66, Rm. 4613, Silver Spring, MD 20993 (1–800–638–2041 or 301–796–7100). Send one self-addressed adhesive label to assist the office in processing your requests.

FOR FURTHER INFORMATION CONTACT: Sara Goldkind, Office of Good Clinical Practice, Food and Drug Administration, 10903 New Hampshire Ave., Bldg. 32, Rm. 5129, Silver Spring, MD 20993–0002. 301–796–8342.

SUPPLEMENTARY INFORMATION:

I. Background

FDA is announcing the availability of a guidance entitled, ''Guidance for IRBs, Clinical Investigators, and Sponsors: IRB Continuing Review after Clinical Investigation Approval.'' This guidance is intended to assist IRBs in carrying out their continuing review responsibility under 21 CFR 56.108(a) and 56.109(f) by providing recommendations regarding the criteria, process, and frequency of continuing review to assure the protection of the rights and welfare of subjects in clinical investigations. The guidance should also help clinical investigators and sponsors better understand their responsibilities related to continuing review. This guidance supersedes the Information Sheet, ''Continuing Review After Study Approval'' (September 1998, Office of Health Affairs, Food and Drug Administration). To enhance human subject protection and reduce regulatory burden, the Department of Health and Human Services, Office for Human Research Protections (OHRP) and FDA have been actively working to harmonize the Agencies' regulatory requirements and guidance for human subject research. This guidance document was developed as a part of these efforts.

In the **Federal Register** of January 13, 2010 (75 FR 1790), FDA announced the availability of the draft guidance of the same title, dated January 2010. FDA received numerous comments on the draft guidance. All comments received during the comment period and questions received by Agency staff related to implementation of the regulations have been carefully reviewed and, where appropriate, incorporated into the guidance. Changes from the draft guidance include more detailed discussion about what should be submitted to assist the IRB in conducting continuing review, clarification of recommendations regarding submission of study-wide information for multi-site studies, discussion of the circumstances in which expedited review procedures may be used for continuing review, and revised guidance about how continuing review dates should be determined. In addition, FDA's draft guidance, ''IRB Continuing Review after Clinical Investigation Approval'', did not address IRB approval of research with conditions. Subsequent to OHRP's issuance of its guidance, ''IRB Approval of Research with Conditions'' (November 2010), FDA received multiple inquiries and comments recommending that FDA adopt the same policy. In response to these comments, FDA is including a discussion of IRB approval of research with conditions in the guidance.

This guidance is part of the Information Sheet Guidance Initiative, announced in the **Federal Register** of February 3, 2006 (71 FR 5861), which describes FDA's intention to update the process for developing, issuing, and making available guidances intended for IRBs, clinical investigators, and

sponsors. Known as ''Information Sheets,'' these guidances have provided recommendations to IRBs, clinical investigators, and sponsors to help them fulfill their responsibilities to protect human subjects who participate in research regulated by the FDA. The Information Sheet Guidance Initiative is intended to ensure that the Information Sheets are updated, consistent with the FDA's good guidance practices (GGPs). As part of the initiative, which will be ongoing, the Agency plans to rescind Information Sheets that are obsolete, revise and reissue guidances that address current issues, and develop new guidance documents as needed.

The guidance is being issued consistent with FDA's good guidance practices regulation (21 CFR 10.115). The guidance represents FDA's current thinking on this topic. It does not create or confer any rights for or on any person and does not operate to bind FDA or the public. An alternative approach may be used if such approach satisfies the requirements of the applicable statutes and regulations.

II. Comments

Interested persons may submit to the Division of Dockets Management (see **ADDRESSES**) either electronic or written comments regarding this document. It is only necessary to send one set of comments. Identify comments with the docket number found in brackets in the heading of this document. Received comments may be seen in the Division of Dockets Management between 9 a.m. and 4 p.m., Monday through Friday.

III. Electronic Access

Persons with access to the Internet may obtain the document at either *http://www.regulations.gov* or *http://www.fda.gov/ScienceResearch/SpecialTopics/RunningClinicalTrials/GuidancesInformationSheetsandNotices/ucm113709.htm.*

Dated: February 21, 2012.

Leslie Kux,

Acting Assistant Commissioner for Policy.

[FR Doc. 2012–4425 Filed 2–24–12; 8:45 am]

BILLING CODE 4160–01–P

DEPARTMENT OF HEALTH AND HUMAN SERVICES

Food and Drug Administration

[Docket No. FDA–2011–N–0918]

Pediatric Studies of Meropenem Conducted in Accordance With Section 409I of the Public Health Service Act; Establishment of Public Docket

AGENCY: Food and Drug Administration, HHS.

ACTION: Notice.

SUMMARY: The Food and Drug Administration (FDA) is announcing the opening of a public docket to make available to the public a report of the pediatric studies of meropenem that were conducted in accordance with section 409I of the Public Health Service Act (PHS Act) and submitted to the Director of the National Institutes of Health (NIH) and the Commissioner of Food and Drugs.

DATES: Submit either electronic or written comments by March 28, 2012.

ADDRESSES: You may submit comments, identified by FDA–2011–N–0918, by any of the following methods.

Electronic Submissions

Submit electronic comments in the following way:

- *Federal eRulemaking Portal: http://www.regulations.gov.* Follow the instructions for submitting comments.

Written Submissions

Submit written submissions in the following ways:

- *Fax:* 301–827–6870.
- *Mail/Hand delivery/Courier (for paper or CD–ROM submissions):* Division of Dockets Management (HFA–305), Food and Drug Administration, 5630 Fishers Lane, rm. 1061, Rockville, MD 20852.

Instructions: All submissions received must include the Agency name and Docket No. for this rulemaking. All comments received may be posted without change to *http://www.regulations.gov,* including any personal information provided.

Docket: For access to the docket to read background documents or comments received, go to *http://www.regulations.gov* and insert the docket number, found in brackets in the heading of this document, into the ''Search'' box and follow the prompts and/or go to the Division of Dockets Management, 5630 Fishers Lane, rm. 1061, Rockville, MD 20852.

FOR FURTHER INFORMATION CONTACT: Denise Pica-Branco, Center for Drug Evaluation and Research, Food and Drug Administration, 10903 New Hampshire Ave., Bldg. 22, rm. 6402, Silver Spring, MD 20993–0002, Email: *denise.picabranco@fda.hhs.gov.*

SUPPLEMENTARY INFORMATION: Under section 409I of the PHS Act (42 U.S.C. 284m), the Secretary of the Department of Health and Human Services (the Secretary) acting through the Director of the NIH, in consultation with FDA and experts in pediatric research, must develop, prioritize, and publish a list of priority needs in pediatric therapeutics, including drugs and indications that require study.[1] For drugs and indications on this list, FDA, acting in consultation with NIH, is authorized to issue a written request to holders of a new drug application (NDA) or abbreviated new drug application (ANDA) for a drug for which pediatric studies are needed to provide safety and efficacy information for pediatric labeling. If the sponsors receiving the written request decline to conduct the studies or if FDA does not receive a response to the written request within 30 days of the date the written request was issued, the Secretary, acting through the Director of NIH and in consultation with FDA, must publish a request for proposals to conduct the pediatric studies described in the written request and award funds to an entity with appropriate expertise for the conduct of the pediatric studies described in the written request. Upon completion of the pediatric studies, a study report that includes all data generated in connection with the studies must be submitted to FDA and NIH and placed in a public docket assigned by FDA.

Meropenem, an antibiotic medication, is labeled for pediatric patients from 3 months of age through adolescence as a single agent antimicrobial therapy for meningitis and complicated intra-abdominal infections, and is a recommended option for monotherapy of high severity complicated intra-abdominal infections in adults. Off-label use of meropenem in newborn and infant patients younger than 3 months of age is significant, despite the lack of adequate pharmacokinetic, dosing, tolerability, and safety data for this age group.

On August 13, 2003, NIH published a **Federal Register** notice (68 FR 48402) announcing the addition of several drugs, including meropenem, to the priority list of drugs most in need of

[1] Prior to the 2007 reauthorization of the Best Pharmaceuticals for Children Act (Pub. L. 107–109), the priority list included specific drugs instead of therapeutic areas.

study for use by children to ensure their safety and efficacy. A written request for pediatric studies of meropenem was issued on September 10, 2004, to AstraZeneca Pharmaceuticals, the holder of the new drug application for meropenem. FDA did not receive a response to the written request. Accordingly, NIH issued a request for proposals to conduct the pediatric studies described in the written request on August 15, 2005, and awarded funds to Duke University on September 28, 2007, to complete the studies described in the written request. Upon completion of the pediatric studies, a report of the pediatric studies of meropenem was submitted to NIH and FDA. As required under section 409I of the PHS act, FDA opened a public docket and NIH placed in the docket the report of pediatric studies of meropenem that was submitted to NIH and FDA. The report includes all data generated in connection with the study, including the written request.

We invite interested parties to review the report and submit comments to the docket. The public docket is available for public review in the Division of Dockets Management (see **ADDRESSES**) between 9 a.m. and 4 p.m., Monday through Friday.

Dated: February 21, 2012.

Leslie Kux,

Acting Assistant Commissioner for Policy.

[FR Doc. 2012–4426 Filed 2–24–12; 8:45 am]

BILLING CODE 4160–01–P

DEPARTMENT OF HEALTH AND HUMAN SERVICES

Health Resources and Services Administration

National Advisory Council on the National Health Service Corps; Request for Nominations

AGENCY: Health Resources and Services Administration, Department of Health and Human Services.

ACTION: Notice.

SUMMARY: The Health Resources and Services Administration (HRSA) is requesting nominations to fill five vacancies on the National Advisory Council (NAC) on the National Health Service Corps (NHSC). The NAC on the NHSC was established in 1978.

DATES: The agency must receive nominations on or before March 28, 2012.

ADDRESSES: All nominations should be sent electronically to Njeri Jones at *NJones@hrsa.gov* or mailed to 5600 Fishers Lane, Room 13–64, Rockville, MD 20857.

FOR FURTHER INFORMATION CONTACT: Kim Huffman, Executive Secretary, National Advisory Council on the National Health Service Corps, at (301) 443–3863 or via email at *KHuffman@hrsa.gov.*

SUPPLEMENTARY INFORMATION: The National Advisory Council on the National Health Service Corps (hereafter referred to as NAC) was established under 42 U.S.C. 254j (Section 337 of the Public Health Service Act), as amended by Section 10501 of the Affordable Care Act. The NAC is governed by provisions of Public Law 92–463 (5 U.S.C. App. 2), also known as the Federal Advisory Committee Act, which sets forth standards for the formation and use of advisory committees.

The NAC on the NHSC is a group of health care providers and health care site administrators who are experts in the issues that communities with a shortage of primary care professionals face in meeting their health care needs. The NAC is a frontline source of information to the NHSC senior management. The NAC is committed to effectively implementing its mandate to advise the Secretary of the Department of Health and Human Services (HHS) and, by designation, the Administrator of the Health Resources and Services Administration (HRSA).

The NAC consists of 15 members who are Special Government Employees. Responsibilities of the Council include: (1) Serving as a forum to identify the priorities for the NHSC and bring forward and anticipate future program issues and concerns through ongoing communication with program staff, professional organizations, communities and program participants; (2) functioning as a sounding board for proposed policy changes by utilizing the varying levels of expertise represented on the Council to advise on specific program areas; (3) developing and distributing white papers and briefs that clearly state issues and/or concerns relating to the NHSC with specific recommendations for necessary policy revisions.

Specifically, HRSA is requesting nominations for individuals with a background in primary care, dental health, and mental health, representing the following areas of expertise: Working with underserved populations, health care policy, recruitment and retention, site administration, customer service, marketing, organizational partnerships, research, and clinical practice. We are looking for nominees that either currently or have previously filled a role as site administrators, physicians, dentists, mid-level professionals (i.e., nurses, physician assistants), mental or behavioral health professionals, and NHSC scholars or loan repayors. Nominees will be invited to serve a 3-year term beginning after July 2012.

HHS will consider nominations of all qualified individuals with a view to ensuring that the NAC includes the areas of subject matter expertise noted above and reflects the diverse primary care health care workforce and health delivery sites. Individuals may nominate themselves or other individuals, and professional associations and organizations may nominate one or more qualified persons for membership on the Council. Nominations shall state that the nominee is willing to serve as a member of the NAC and appears to have no conflict of interest that would preclude the membership. Potential candidates will be asked to provide detailed information concerning financial interests, consultancies, research grants, and/or contracts that might be affected by recommendations of the Committee to permit evaluation of possible sources of conflicts of interest.

A nomination package should include the following information for each nominee: (1) A Letter of nomination stating the name, affiliation, and contact information for the nominee, the basis for the nomination (i.e., what specific attributes, perspectives, and/or skills does the individual possess that would benefit the workings of NAC), and the nominee's field(s) of expertise; (2) a biographical sketch of the nominee and a copy of his/her curriculum vitae; and (3) the name, address, daytime telephone number, and email address at which the nominator can be contacted.

HHS has special interest in assuring that women, minority groups, and the physically disabled are adequately represented on advisory committees; and therefore, extends particular encouragement to nominations for appropriately qualified female, minority, or disabled candidates.

Dated: February 21, 2012.

Reva Harris,

Acting Director, Division of Policy and Information Coordination.

[FR Doc. 2012–4572 Filed 2–24–12; 8:45 am]

BILLING CODE 4165–15–P

DEPARTMENT OF HEALTH AND HUMAN SERVICES

Indian Health Service

Request for Public Comment; 60-Day Proposed Information Collection: Indian Health Service; Loan Repayment Program (LRP)

AGENCY: Indian Health Service, HHS.

ACTION: Notice.

SUMMARY: In compliance with Section 3506(c)(2)(A) of the Paperwork Reduction Act of 1995, which requires 60 days for public comment on proposed information collection projects, the Indian Health Service (IHS) is publishing for comment a summary of a proposed information collection to be submitted to the Office of Management and Budget (OMB) for review.

Proposed Collection: Title: 0917–0014, ''Indian Health Service Loan Repayment Program.'' *Type of Information Collection Request:* Revision of currently approved information collection, 0917–0014, ''Indian Health Service Loan Repayment Program.'' The LRP application has been revised so that it is now available in an electronically fillable and fileable format. *Form(s):* The IHS LRP Information Booklet contains the instructions and the application formats. *Need and Use of Information Collection:* The IHS LRP identifies health professionals with pre-existing financial obligations for education expenses that meet program criteria and who are qualified and willing to serve at, often remote, IHS health care facilities. Under the program, eligible health professionals sign a contract through which the IHS agrees to repay part or all of their indebtedness for professional training time in IHS health care facilities. This program is necessary to augment the critically low health professional staff at IHS health care facilities.

Any health professional wishing to have their health education loans repaid may apply to the IHS LRP. A two-year contract obligation is signed by both parties, and the individual agrees to work at an IHS location and provide health services to American Indian and Alaska Native individuals.

The information collected via the on-line application from individuals is analyzed and a score is given to each applicant. This score will determine which applicants will be awarded each fiscal year. The administrative scoring system assigns a score to the geographic location according to vacancy rates for that fiscal year and also considers whether the location is in an isolated area. When an applicant accepts employment at a location, they in turn ''pick-up'' the score of that location. *Affected Public:* Individuals and households. *Type of Respondents:* Individuals.

The table below provides: Types of data collection instruments, Estimated number of respondents, Number of responses per respondent, Annual number of responses, Average burden hour per response, and Total annual burden hour(s).

ESTIMATED BURDEN HOURS

Data Collection Instrument(s)	Number of respondents	Number of responses per respondent	Average burden per response (in hours)	Total annual responses
LRP Application	510	1	1.5	765

There are no Capital Costs, Operating Costs, and/or Maintenance Costs to report.

Requests for Comments: Your comments and/or suggestions are invited on one or more of the following points:

(a) Whether the information collection activity is necessary to carry out an agency function;

(b) Whether the agency processes the information collected in a useful and timely fashion;

(c) The accuracy of public burden estimate (the estimated amount of time needed for individual respondents to provide the requested information);

(d) Whether the methodology and assumptions used to determine the estimates are logical;

(e) Ways to enhance the quality, utility, and clarity of the information being collected; and

(f) How the newly created online application assists the applicant efficiently and effectively.

Send your comments, requests for more information on the proposed collection, or requests to obtain a copy of the data collection instruments to: Ms. Tamara Clay, Acting IHS Reports Clearance Officer, 801 Thompson Avenue, TMP, Suite 450–30, Rockville, MD 20852–1627; call non-toll free (301) 443–4750; send via facsimile to (301) 443–2316; or send your email requests, comments, and return address to: *Tamara.Clay@ihs.gov. Comment Due Date:* April 27, 2012. Your comments regarding this information collection are best assured of having full effect if received within 60 days of the date of this publication.

Dated: February 13, 2012.

Yvette Roubideaux,

Indian Health Service Director.

[FR Doc. 2012–4555 Filed 2–24–12; 8:45 am]

BILLING CODE 4165–16–P

DEPARTMENT OF HEALTH AND HUMAN SERVICES

National Institutes of Health

Submission for OMB Review; Comment Request; STAR METRICS (Science and Technology for America's Reinvestment: Measuring the Effects of Research on Innovation, Competitiveness and Science)

SUMMARY: Under the provisions of section 3507(a)(1)(D) of the Paperwork Reduction Act of 1995, the Office of the Director, National Institutes of Health (NIH) has submitted to the Office of Management and Budget (OMB) a request to review and approve the information collection listed below. This proposed information collection was previously published in the **Federal Register** on Oct 5, 2011 and allowed 60 days for public comment. One comment was received from the public. The purpose of this notice is to allow an additional 30 days for public comment. The National Institutes of Health may not conduct or sponsor, and the respondent is not required to respond to, an information collection that has

been extended, revised, or implemented on or after October 1, 1995, unless it displays a currently valid OMB control number.

Proposed Collection: Title: STAR METRICS (Science and Technology for America's Reinvestment: Measuring the EffecTs of Research on Innovation, Competitiveness and Science). *Type of information Collection Request:* Extension of OMB number 0925–0616, expiration date 03/31/2012. *Need and Use of Information Collection:* The aim of STAR METRICS is twofold. The goal of STAR METRICS is to continue to provide mechanisms that will allow participating universities and Federal agencies with a reliable and consistent means to account for the number of scientists and staff that are on research institution payrolls, supported by federal funds. In subsequent generations of the program, it is hoped that STAR METRICS will allow for measurement of science impact on economic outcomes (such as job creation), on knowledge generation (such as citations, and patents) as well as on social and health outcomes.

Frequency of Response: Quarterly. *Affected Public:* Universities and other research institutions. *Type of Respondents:* University administrators. The annual reporting burden is as follows:

Estimated Number of Respondent: 100. *Estimated Number of Responses per Respondent:* 4. *Average Burden Hours per Response:* 2.5. *Estimated Total Annual Burden Hours Requested:* 1,315. The annualized cost to respondents is estimated to be $65,750. There are no Capital Costs to report. There are no Operating or Maintenance Costs to report.

A.12–1—ESTIMATES OF ANNUAL BURDEN HOURS

	Number of respondents	Frequency of response	Average Time per response (in hours)	Annual hour burden
Stage I: One time data input	7	1	45	315
Stage 2: Ongoing quarterly data input	100	4	2.5	1000
Total				1315

Request for Comments: Written comments and/or suggestions from the public and affected agencies are invited on one or more of the following points: (1) Whether the proposed collection of information is necessary for the proper performance of the functioning of the National Cancer Institute, including whether the information will have practical utility; (2) the accuracy of the agency's estimate of the burden of the proposed collection of information, including the validity of the methodology and assumptions used; (3) ways to enhance the quality, utility, and clarity of the information to be collected; and (4) ways to minimize the burden of the collection of information on those who are to respond, including the use of appropriate automated, electronic, mechanical, or other technological collection techniques or other forms of information technology.

Direct Comments to OMB: Written comments and/or suggestions regarding the item(s) contained in this notice, especially regarding the estimated public burden and associated response time, should be directed to the Attention: NIH Desk Officer, Office of Management and Budget, at *OIRA_submission@omb.eop.gov* or by fax to 202–395–6974. To request more information on the proposed project or to obtain a copy of the data collection plans and instruments, contact: George Chacko, Office of Planning, Analysis, and Evaluation, Center for Scientific Review, 6701 Rockledge Drive, Suite 3030, Bethesda, MD 20892 or call non-toll-free at 301–435–1111 or email your request, including your address to: *chackoge@mail.nih.gov*.

Comments Due Date: Comments regarding this information collection are best assured of having their full effect if received within 30 days of the date of this publication.

Dated: February 20, 2012.

George Chacko,

Center for Scientific Review, National Institutes of Health.

[FR Doc. 2012–4536 Filed 2–24–12; 8:45 am]

BILLING CODE 4140–01–P

DEPARTMENT OF HEALTH AND HUMAN SERVICES

National Institutes of Health

Submission for OMB Review; Comment Request DERT Extramural Grantee Data Collection

SUMMARY: Under the provisions of Section 3507(a)(1)(D) of the Paperwork Reduction Act of 1995, the National Institute of Environmental Health Sciences (NIEHS), the National Institutes of Health (NIH) has submitted to the Office of Management and Budget (OMB) a request for review and approval of the information collection listed below. This proposed information collection was previously published in the **Federal Register**, Vol. 76, No. 202, on Wednesday, October 19, 2011, page 64954 and allowed 60 days for public comment. No public comments were received. The purpose of this notice is to allow an additional 30 days for public comment. The National Institutes of Health may not conduct or sponsor, and the respondent is not required to respond to, an information collection that has been extended, revised, or implemented on or after October 1, 1995, unless it displays a currently valid OMB control number.

Proposed Collection: Title: DERT Extramural Grantee Data Collection. *Type of Information Collection Request:* New. *Need and Use of Information Collection:* In order to make informed management decisions about its research programs and to demonstrate the outputs, outcomes and impacts of its research programs NIEHS will collect, analyze and report on data from extramural grantees who are currently receiving funding or who have received funding in the past on topics such as:

- Key scientific outcomes achieved through the research and the impact on the field of environmental health science.
- Contribution of research findings to program goals and objectives.
- Satisfaction with the program support received.
- Challenges and benefits of the funding mechanism used to support the science.
- Emerging research areas and gaps in the research.

Information gained from this primary data collection will be used in conjunction with data from grantee progress reports and presentations at grantee meetings to inform internal programs and new funding initiatives.

Outcome information to be collected includes measures of agency-funded research resulting in dissemination of findings, investigator career development, grant-funded knowledge and products, commercial products and drugs, laws, regulations and standards, guidelines and recommendations, information on patents and new drug applications and community outreach and public awareness relevant to extramural research funding and emerging areas of research. Satisfaction information to be collected includes measures of satisfaction with the type of funding or program management mechanism used, challenges and benefits with the program support received, and gaps in the research. *Frequency of Response:* Once per grantee, per NIEHS research portfolio. *Affected Public:* Current or past NIEHS grantees. *Type of Respondents:* Principal Investigators with current or past NIEHS research or training grants. The annual reporting burden is as follows: *Estimated Number of Respondents:* 600; *Estimated Number of Responses per Respondent:* 1; *Average Burden Hours per Response:* .5 (30 minutes); and *Estimated Total Annual Burden Hours Requested:* 100. The annualized cost to respondents is estimated at: Approximately $17. There are no Capital Costs to report. There are no Operating or Maintenance Costs to report.

(Note: The following table is acceptable for the Respondent and Burden Estimate information, if appropriate, instead of the text as shown above.)

Type of respondents	Estimated number of respondents	Estimated number of responses per respondent	Average burden hours per response (min.)	Estimated total annual burden hours requested
NIEHS Grantee	600	1	30	100

Request for Comments: Written comments and/or suggestions from the public and affected agencies are invited on one or more of the following points: (1) Whether the proposed collection of information is necessary for the proper performance of the function of the agency, including whether the information will have practical utility; (2) The accuracy of the agency's estimate of the burden of the proposed collection of information, including the validity of the methodology and assumptions used; (3) Ways to enhance the quality, utility, and clarity of the information to be collected; and (4) Ways to minimize the burden of the collection of information on those who are to respond, including the use of appropriate automated, electronic, mechanical, or other technological collection techniques or other forms of information technology.

Direct Comments to OMB: Written comments and/or suggestions regarding the item(s) contained in this notice, especially regarding the estimated public burden and associated response time, should be directed to the: Office of Management and Budget, Office of Regulatory Affairs, *OIRA_submission@omb.eop.gov* or by fax to 202–395–6974, Attention: Desk Officer for NIH. To request more information on the proposed project or to obtain a copy of the data collection plans and instruments, contact Dr. Kristianna Pettibone, Evaluator, Program Analysis Branch, NIEHS, NIH, 530 Davis Dr., Room 3055, Morrisville, NC 20560, or call non-toll-free number 919–541–7752 or email your request, including your address to: *pettibonekg@niehs.nih.gov*.

Comments Due Date: Comments regarding this information collection are best assured of having their full effect if received within 30-days of the date of this publication.

Dated: February 16, 2012.

Joellen M. Austin,

Associate Director for Management, NIEHS, National Institutes of Health.

[FR Doc. 2012–4543 Filed 2–24–12; 8:45 am]

BILLING CODE 4140–01–P

DEPARTMENT OF HEALTH AND HUMAN SERVICES

National Institutes of Health

Government-Owned Inventions; Availability for Licensing

AGENCY: National Institutes of Health, Public Health Service, HHS.

ACTION: Notice.

SUMMARY: The inventions listed below are owned by an agency of the U.S. Government and are available for licensing in the U.S. in accordance with 35 U.S.C. 207 to achieve expeditious commercialization of results of federally-funded research and development. Foreign patent applications are filed on selected inventions to extend market coverage for companies and may also be available for licensing.

ADDRESSES: Licensing information and copies of the U.S. patent applications listed below may be obtained by writing to the indicated licensing contact at the Office of Technology Transfer, National Institutes of Health, 6011 Executive Boulevard, Suite 325, Rockville, Maryland 20852–3804; telephone: 301–496–7057; fax: 301–402–0220. A signed Confidential Disclosure Agreement will be required to receive copies of the patent applications.

Model Cell Lines With and Without AKT1 Mutations Derived From Proteus Syndrome Patients

Description of Technology: The Proteus syndrome is a congenital disorder characterized by patchy overgrowth and hyperplasia (cell proliferation) of multiple tissues and organs, along with susceptibility to developing tumors. It is a rare disorder, with incidence of less than one case per million, caused by a somatic mutation. It is also a mosaic disorder, that is one in which cells of the same person have different genetic content from one another. The NHGRI inventors have generated cell lines from patients with Proteus syndrome and discovered that a somatic activating mutation in the serine-threonine kinase AKT1 is associated with Proteus syndrome. AKT1 is an oncogene and an enzyme known to mediate cell proliferation and apoptosis (programmed cell death process) and has been a target for anti-cancer therapies. A number of single-cell lines with the AKT1 mutation showing increased AKT1 phosphorylation and their matched controls without the mutation have been generated. The cell lines can be used to screen therapeutic targets for AKT1, for study design, as models of Proteus syndrome and early stages of cancerous conditions.

Potential Commercial Applications

- Cell lines generated from patients with Proteus syndrome.
- Obtained a number of single-cell lines with the AKT1 mutation and their matched controls without the mutation.

• Cell lines with the mutation showed increased AKT1 phosphorylation for activating mutation.

Competitive Advantages

• Screening of potential therapeutics that target AKT1.
• Cell lines have well-matched controls for rigorous study design.
• Serves as model cell lines of Proteus syndrome and early stages of cancerous conditions.

Development Stage

• Prototype.
• Clinical.
• In vivo data available (human).

Inventors: Leslie G. Biesecker and Marjorie J. Lindhurst (NHGRI).

Publication: Lindhurst MJ, et al. A mosaic activating mutation in AKT1 associated with the Proteus syndrome. N Engl J Med. 2011 Aug 18;365(7):611–619. [PMID 21793738].

Intellectual Property: HHS Reference No. E–033–2012/0 — Research Tool. Patent protection is not being pursued for this technology.

Licensing Contact: Whitney Hastings, Ph.D.; 301–451–7337; *hastingw@mail.nih.gov*

Non-toxic Compounds That Inhibit the Formation and Spreading of Tumors

Description of Technology: Available for licensing are novel pyrrolopyrimidine compounds that disrupt the assembly of the perinucleolar compartment (PNC), a sub-nuclear structure highly prevalent in metastatic tumors. These notable compounds act without overt cytotoxicity.

The presence of the PNC positively correlates with metastatic capacity, making it a potential marker for cancer development and prognosis. These compounds could also serve as useful tools to elucidate the biology driving the formation and maintenance of the PNC, and unravel its association with metastasis.

Potential Commercial Applications

• Use in the therapeutic intervention of metastasis in cancer.
• Use as tools to elucidate the biology of the PNC.

Competitive Advantages

• No existing FDA-approved treatment for the clinical management of metastasis.
• Target is specific to metastatic tumors.
• Compounds are not toxic.
• Broadly acting across all metastatic cancers.

Development Stage

• Early-stage.
• In vitro data available.

Inventors: Samarjit Patnaik et al. (NCATS).

Intellectual Property: HHS Reference No. E–276–2011/0 — U.S. Provisional Application No. 61/576,780 filed 16 Dec 2011.

Licensing Contact: Patrick McCue, Ph.D.; 301–435–5560; *mccuepat@mail.nih.gov.*

Collaborative Research Opportunity: The National Center for Advancing Translational Sciences is seeking statements of capability or interest from parties interested in collaborative research to further develop, evaluate or commercialize this technology. For collaboration opportunities, please contact Lili M. Portilla, MPA at 301–217–2589 or *Lilip@nih.gov.*

Novel Radio-Labeled Agents for Imaging Alzheimer's Disease-Associated Amyloid

Description of Technology: This technology introduces novel radio-labeled agents for imaging amyloid deposits in the brains of Alzheimer's Disease patients. These are small molecule, radio-ligand compounds that are analogs of benzo[d]thiazole. They are highly specific to amyloid, have low background noise, do not undergo rapid defluoridation and do not produce residual radioactivity in the brain. In addition, the compounds are stable and may be readily synthesized from commercially available starting materials. These compounds may be used in many noninvasive imaging techniques including: magnetic resonance spectroscopy (MRS) or imaging (MRI), or positron emission tomography (PET) or single-photon emission computed tomography (SPECT) to measure amyloid. Non-invasive detection of Alzheimer's disease-associated amyloid plaques in the brain would be valuable for early diagnosis, monitoring, and for clinical development of therapeutic drugs.

Potential Commercial Applications: Imaging agents for use in magnetic resonance spectroscopy (MRS), or imaging (MRI), positron emission tomography (PET) or single-photon emission computed tomography (SPECT).

Competitive Advantages: Highly specificity to amyloid, low background, do not undergo rapid defluoridation and do not produce residual radioactivity in the brain.

Development Stage: Early-stage.

Inventors: Lisheng Cai and Victor W. Pike (NIMH).

Publications

1. Cai L, et al. Synthesis and structure-affinity relationships of new 4-(6-iodo-H-imidazo[1,2-a]pyridin-2-yl)-N-dimethylbenzeneamine derivatives as ligands for human beta-amyloid plaques. J Med Chem. 2007 Sep 20;50(19):4746–4758. [PMID 17722900].

2. Cai L, et al. Synthesis and evaluation of N-methyl and S-methyl 11C-labeled 6-methylthio-2-(4'-N,N-dimethylamino)phenylimidazo[1,2-a]pyridines as radioligands for imaging beta-amyloid plaques in Alzheimer's disease. J Med Chem. 2008 Jan 10;51(1):148–158. [PMID 18078311].

Intellectual Property: HHS Reference No. E–225–2011/0—U.S. Provisional Application No. 61/535,569 filed 16 Sep 2011.

Related Technology: HHS Reference No. E–156–2006/0—U.S. Patent Application No. 12/293,340 filed 17 Sep 2008.

Licensing Contact: Tedd Fenn, J.D.; 301–435–5031; *Tedd.Fenn@nih.gov.*

Collaborative Research Opportunity: The National Institute of Mental Health (NIMH) is seeking statements of capability or interest from parties interested in collaborative research to further develop, evaluate or commercialize Beta-amyloid Imaging Agents. For collaboration opportunities, please contact Suzanne L. Winfield, Ph.D. at *winfiels@intra.nimh.nih.gov* or 301–402–4324.

A New Class of Broad-Spectrum Antibiotics: Naturally-Occurring Chrysophaetins and Their Analogues

Description of Technology: This invention, offered for licensing and commercial development, relates to a new class of naturally occurring antimicrobial compounds called Chrysophaetins, and to their synthetic analogues. Isolated from an alga species, the mechanism of action of these compounds is through the inhibition of bacterial cytoskeletal protein FtsZ, an enzyme necessary for the replication of bacteria. FtsZ is responsible for Z-ring assembly in bacteria, which leads to bacterial cell division. Highly conserved among all bacteria, FtsZ is a very attractive antimicrobial target.

The chrysophaetin exhibits antimicrobial activity against drug resistant bacteria, methicillin-resistant *Staphylococcus aureus* (MRSA) and vancomycin-resistant *Enterococcus faecalis* (VRE), as well as other drug susceptible strains. The general structure of the natural compound is shown below:

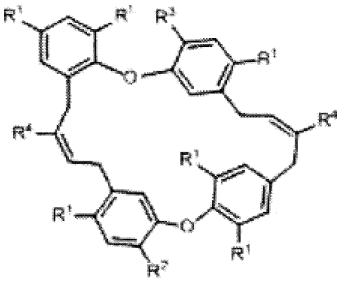

Potential Commercial Applications

- Therapeutic potential for treating general and drug-resistant bacterial infections in clinical and veterinary populations.
- Antiseptics in hospital settings.

Competitive Advantages

- Effective for commonly occurring drug-resistant infections MRSA and VRE.
- Broad spectrum of efficacy because mechanism of action is against the bacterial protein FtsZ, which has similar structure in all bacteria.
- Potential for additive efficacy when combined with other antibiotics due to distinct mechanism of action.
- Other drugs with similar structure and antibacterial properties can be synthesized using the chemical structure template shown above.

Development Stage

- Early-stage.
- In vitro data available.

Inventors: Carole A Bewley, et al. (NIDDK).

Publication: Plaza A, et al. Chrysophaentins A–H, antibacterial bisdiarylbutene macrocycles that inhibit the bacterial cell division protein FtsZ. J Am Chem Soc. 2010 Jul 7;132(26):9069–9077. [PMID 20536175].

Intellectual Property: HHS Reference No. E–116–2010/0—PCT Application No. PCT/US2011/026200 filed 25 Feb 2011, which published as WO 2011/106630 on 01 Sep 2011.

Licensing Contact: John Stansberry, Ph.D.; 301–435–5236; *stansbej@mail.nih.gov.*

Collaborative Research Opportunity: The National Institute of Diabetes and Digestive and Kidney Diseases, Laboratory of Bioorganic Chemistry, is seeking statements of capability or interest from parties interested in collaborative research to further develop, evaluate, or commercialize the chrysophaentin antibiotics. Please contact Marguerite J. Miller at 301–451–3636 or *millermarg@niddk.nih.gov* for more information.

Dated: February 21, 2012.

Richard U. Rodriguez,

Director, Division of Technology Development and Transfer, Office of Technology Transfer, National Institutes of Health.

[FR Doc. 2012–4376 Filed 2–24–12; 8:45 am]

BILLING CODE 4140–01–P

DEPARTMENT OF HEALTH AND HUMAN SERVICES

National Institutes of Health

National Institute of General Medical Sciences; Notice of Closed Meeting Pursuant to Section 10(d) of the Federal Advisory Committee Act, as Amended (5 U.S.C. App.), Notice Is Hereby Given of the Following Meeting.

The meeting will be closed to the public in accordance with the provisions set forth in sections 552b(c)(4) and 552b(c)(6), Title 5 U.S.C., as amended. The grant applications and the discussions could disclose confidential trade secrets or commercial property such as patentable material, and personal information concerning individuals associated with the grant applications, the disclosure of which would constitute a clearly unwarranted invasion of personal privacy.

Name of Committee: National Institute of General Medical Sciences Special Emphasis Panel Review of Minority Biomedical Research Support Genetics Applications.

Date: March 19–20, 2012.

Time: 8:30 a.m. to 5 p.m.

Agenda: To review and evaluate grant applications.

Place: Hyatt Regency—Bethesda, One Bethesda Metro Center, 7400 Wisconsin Avenue, Bethesda, MD 20814.

Contact Person: Saraswathy Seetharam, Ph.D., Scientific Review Officer, Office of Scientific Review, National Institute of General Medical Sciences, National Institutes of Health, 45 Center Drive, Room 3An12C, Bethesda, MD 20892, 301–594–2763, *seetharams@nigms.nih.gov.*

(Catalogue of Federal Domestic Assistance Program Nos. 93.375, Minority Biomedical Research Support; 93.821, Cell Biology and Biophysics Research; 93.859, Pharmacology, Physiology, and Biological Chemistry Research; 93.862, Genetics and Developmental Biology Research; 93.88, Minority Access to Research Careers; 93.96, Special Minority Initiatives, National Institutes of Health, HHS)

Dated: February 21, 2012.

Jennifer S. Spaeth,

Director, Office of Federal Advisory Committee Policy.

[FR Doc. 2012–4526 Filed 2–24–12; 8:45 am]

BILLING CODE 4140–01–P

DEPARTMENT OF HEALTH AND HUMAN SERVICES

National Institutes of Health

National Institute on Deafness and Other Communication Disorders; Notice of Closed Meeting

Pursuant to section 10(d) of the Federal Advisory Committee Act, as amended (5 U.S.C. App.), notice is hereby given of the following meeting.

The meeting will be closed to the public in accordance with the provisions set forth in sections 552b(c)(4) and 552b(c)(6), Title 5 U.S.C., as amended. The grant applications and the discussions could disclose confidential trade secrets or commercial property such as patentable material, and personal information concerning individuals associated with the grant applications, the disclosure of which would constitute a clearly unwarranted invasion of personal privacy.

Name of Committee: National Institute on Deafness and Other Communication Disorders Special Emphasis Panel P30 Review

Date: March 28, 2012.

Time: 12:30 p.m. to 3:30 p.m.

Agenda: To review and evaluate grant applications.

Place: National Institutes of Health, 6120 Executive Blvd., Rockville, MD 20852 (Telephone Conference Call).

Contact Person: Christine A. Livingston, Ph.D. Scientific Review Officer, Division of Extramural Activities, National Institutes of Health/NIDCD, 6120 Executive Blvd.—MSC 7180, Bethesda, MD 20892, (301) 496–8683, *livingsc@mail.nih.gov.*

Information is also available on the Institute's/Center's home page: *http://www.nidcd.nih.gov/about/groups/sep/*, where an agenda and any additional information for the meeting will be posted when available.

(Catalogue of Federal Domestic Assistance Program Nos. 93.173, Biological Research Related to Deafness and Communicative Disorders, National Institutes of Health, HHS)

Dated: February 21, 2012.

Jennifer S. Spaeth,

Director, Office of Federal Advisory Committee Policy.

[FR Doc. 2012–4535 Filed 2–24–12; 8:45 am]

BILLING CODE 4140–01–P

DEPARTMENT OF HEALTH AND HUMAN SERVICES

National Institutes of Health

National Institute of General Medical Sciences; Notice of Closed Meeting

Pursuant to section 10(d) of the Federal Advisory Committee Act, as

amended (5 U.S.C. App.), notice is hereby given of the following meeting.

The meeting will be closed to the public in accordance with the provisions set forth in sections 552b(c)(4) and 552b(c)(6), Title 5 U.S.C., as amended. The grant applications and the discussions could disclose confidential trade secrets or commercial property such as patentable material, and personal information concerning individuals associated with the grant applications, the disclosure of which would constitute a clearly unwarranted invasion of personal privacy.

Name of Committee: National Institute of General Medical Sciences Special Emphasis Panel; Review of Minority Biomedical Research Support Behavioral Applications.

Date: March 19, 2012.

Time: 1 p.m. to 5 p.m.

Agenda: To review and evaluate grant applications.

Place: National Institutes of Health, Natcher Building, 45 Center Drive, Room 3An18, Bethesda, MD 20892, (Telephone Conference Call).

Contact Person: Rebecca H. Johnson, Ph.D., Scientific Review Officer, Office of Scientific Review, National Institute of General Medical Sciences, National Institutes of Health, 45 Center Drive, Room 3An18C, Bethesda, MD 20892, 301–594–2771, *johnsonrh@nigms.nih.gov.*

(Catalogue of Federal Domestic Assistance Program Nos. 93.375, Minority Biomedical Research Support; 93.821, Cell Biology and Biophysics Research; 93.859, Pharmacology, Physiology, and Biological Chemistry Research; 93.862, Genetics and Developmental Biology Research; 93.88, Minority Access to Research Careers; 93.96, Special Minority Initiatives, National Institutes of Health, HHS)

Dated: February 21, 2012.

Jennifer S. Spaeth,

Director, Office of Federal Advisory Committee Policy.

[FR Doc. 2012–4532 Filed 2–24–12; 8:45 am]

BILLING CODE 4140–01–P

DEPARTMENT OF HEALTH AND HUMAN SERVICES

National Institutes of Health

National Institute on Aging; Notice of Closed Meeting

Pursuant to section 10(d) of the Federal Advisory Committee Act, as amended (5 U.S.C. App.), notice is hereby given of the following meeting.

The meeting will be closed to the public in accordance with the provisions set forth in sections 552b(c)(4) and 552b(c)(6), Title 5 U.S.C., as amended. The grant applications and the discussions could disclose confidential trade secrets or commercial property such as patentable material, and personal information concerning individuals associated with the grant applications, the disclosure of which would constitute a clearly unwarranted invasion of personal privacy.

Name of Committee: National Institute on Aging Special Emphasis Panel; Systems Biology of Aged in Yeast.

Date: March 12, 2012.

Time: 8 a.m. to 5 p.m.

Agenda: To review and evaluate grant applications.

Place: National Institute on Aging, Gateway Building, 7201 Wisconsin Avenue, Suite 2C212, Bethesda, MD 20892, (Telephone Conference Call).

Contact Person: Bita Nakhai, Ph.D., Scientific Review Officer, Scientific Review Branch, National Institute on Aging, Gateway Bldg., 2C212, 7201 Wisconsin Avenue, Bethesda, MD 20814, 301–402–7701, *nakhaib@nia.nih.gov.*

This notice is being published less than 15 days prior to the meeting due to the timing limitations imposed by the review and funding cycle.

(Catalogue of Federal Domestic Assistance Program Nos. 93.866, Aging Research, National Institutes of Health, HHS)

Dated: February 21, 2012.

Jennifer S. Spaeth,

Director, Office of Federal Advisory Committee Policy.

[FR Doc. 2012–4530 Filed 2–24–12; 8:45 am]

BILLING CODE 4140–01–P

DEPARTMENT OF HEALTH AND HUMAN SERVICES

National Institutes of Health

National Institute of Dental and Craniofacial Research; Notice of Closed Meeting

Pursuant to section 10(d) of the Federal Advisory Committee Act, as amended (5 U.S.C. App.), notice is hereby given of the following meeting.

The meeting will be closed to the public in accordance with the provisions set forth in sections 552b(c)(4) and 552b(c)(6), Title 5 U.S.C., as amended. The grant applications and the discussions could disclose confidential trade secrets or commercial property such as patentable material, and personal information concerning individuals associated with the grant applications, the disclosure of which would constitute a clearly unwarranted invasion of personal privacy.

Name of Committee: National Institute of Dental and Craniofacial Research Special Emphasis Panel; DSR member conflict applications.

Date: March 15, 2012.

Time: 1 p.m. to 3 p.m.

Agenda: To review and evaluate grant applications.

Place: National Institutes of Health, Two Democracy Plaza, 6707 Democracy Boulevard, Bethesda, MD 20892, (Telephone Conference Call).

Contact Person: Jayalakshmi Raman, Ph.D., Scientific Review Officer, Scientific Review Branch, National Institute of Dental and Craniofacial Research, One Democracy Plaza Room 670, Bethesda, MD 20892–4878, 301–594–2904, *ramanj@mail.nih.gov.*

(Catalogue of Federal Domestic Assistance Program Nos. 93.121, Oral Diseases and Disorders Research, National Institutes of Health, HHS)

Dated: February 21, 2012.

Jennifer S. Spaeth,

Director, Office of Federal Advisory Committee Policy.

[FR Doc. 2012–4537 Filed 2–24–12; 8:45 am]

BILLING CODE 4140–01–P

DEPARTMENT OF HOUSING AND URBAN DEVELOPMENT

[Docket No. FR–5603–C–11]

Notice of Submission of Proposed Information Collection to OMB; Local Appeals to Single-Family Mortgage Limits

AGENCY: Office of the Chief Information Officer, HUD.

ACTION: Notice; correction.

SUMMARY: On February 14, 2012, at 77 FR 8276, HUD published a information collection notice.

Correction

The proposed information collection requirement described below has been submitted to the Office of Management and Budget (OMB) for review, as required by the Paperwork Reduction Act. The Department is soliciting public comments on the subject proposal.

Any interested party may submit a request for the mortgage limits to be increased in a particular area if they believe that the present limit does not accurately reflect the higher sales prices in that area. Any request for an increase must be accompanied by sufficient housing sales price data to justify higher limits. Typically, this data includes housing sales data extracted from multiple listing services (MLS) that includes all or nearly all one-family and condominium sales in the area for a specified period of time, deleting all non-arms length sales and sales involving two or more family units. These requests are usually submitted by housing industry groups, such as homebuilders, realtors, and mortgage lenders. Most often, the housing sales

price data is necessary to support a request for a higher mortgage limit that may be obtained from existing local industry sources, such as the real estate multiple listing services. The request for an increase to the mortgage limit is required to obtain benefits.

DATES: *Comments Due Date:* March 28, 2012.

ADDRESSES: Interested persons are invited to submit comments regarding this proposal. Comments should refer to the proposal by name and/or OMB approval Number (2502–0302) and should be sent to: HUD Desk Officer, Office of Management and Budget, New Executive Office Building, Washington, DC 20503; fax: 202–395–5806. Email: *OIRA_Submission@omb.eop.gov*.

FOR FURTHER INFORMATION CONTACT: Colette Pollard, Reports Management Officer, QDAM, Department of Housing and Urban Development, 451 Seventh Street SW., Washington, DC 20410; email Colette Pollard at *Colette.Pollard@hud.gov.* or telephone (202) 402–3400. This is not a toll-free number. Copies of available documents submitted to OMB may be obtained from Ms. Pollard.

SUPPLEMENTARY INFORMATION: This notice informs the public that the Department of Housing and Urban Development has submitted to OMB a request for approval of the Information collection described below. This notice is soliciting comments from members of the public and affecting agencies concerning the proposed collection of information to: (1) Evaluate whether the proposed collection of information is necessary for the proper performance of the functions of the agency, including whether the information will have practical utility; (2) Evaluate the accuracy of the agency's estimate of the burden of the proposed collection of information; (3) Enhance the quality, utility, and clarity of the information to be collected; and (4) Minimize the burden of the collection of information on those who are to respond; including through the use of appropriate automated collection techniques or other forms of information technology, e.g., permitting electronic submission of responses.

This notice also lists the following information:

Title of Proposal: Local Appeals to Single-Family Mortgage Limits.

OMB Approval Number: 2502–0302.

Form Numbers: None.

Description of the Need for the Information and Its Proposed Use: Any interested party may submit a request for the mortgage limits to be increased in a particular area if they believe that the present limit does not accurately reflect the higher sales prices in that area. Any request for an increase must be accompanied by sufficient housing sales price data to justify higher limits. Typically, this data includes housing sales data extracted from multiple listing services (MLS) that includes all or nearly all one-family and condominium sales in the area for a specified period of time, deleting all non-arms length sales and sales involving two or more family units. These requests are usually submitted by housing industry groups, such as homebuilders, realtors, and mortgage lenders. Most often, the housing sales price data is necessary to support a request for a higher mortgage limit that may be obtained from existing local industry sources, such as the real estate multiple listing services. The request for an increase to the mortgage limit is required to obtain benefits.

Frequency of Submission: On occasion.

Estimation of the total numbers of hours needed to prepare the information collection including number of respondents, frequency of response, and hours of response: The number of burden hours is 119. The number of respondents is 17, which is based on the actual number of requests received since 2008. The number of responses is 17 and the frequency of response is one per appeal. The burden hour per response is 7. The Federal government burden has reduced over the past 3 years. In 2010, only one appeal was received but rejected due to HUD having sufficient data in support of loan limit. In 2011, no appeals were received.

Total Estimated Burden Hours: 119.

Status: Extension without change of a currently approved collection.

Authority: Section 3507 of the Paperwork Reduction Act of 1995, 44 U.S.C. 35, as amended.

Dated: February 21, 2012.

Colette Pollard,

Departmental Reports Management Officer, Office of the Chief Information Officer.

[FR Doc. 2012–4525 Filed 2–24–12; 8:45 am]

BILLING CODE 4210–67–P

DEPARTMENT OF THE INTERIOR

Office of the Secretary

Draft Policy on Consultation With Alaska Native Claims Settlement Act Corporations

AGENCY: Office of the Secretary, Interior.

ACTION: Notice of availability and request for comments.

SUMMARY: The Department of the Interior is requesting comments on its draft policy on consultation with Alaska Native Claims Settlement Act corporations.

DATES: Submit comments by April 27, 2012.

ADDRESSES: Send comments on the draft policy to: attn: Alaska Consultation Policy, Office of the Secretary, 1849 C Street NW., Washington, DC 20240; Email: *consultation@doi.gov.* You can request copies of the draft policy by sending a letter or email to one of the above addresses or by calling 202–208–4503.

FOR FURTHER INFORMATION CONTACT: Jennifer Sisk, Department of the Interior, 1849 C Street NW., Washington, DC 20240. Email: *Jennifer_Sisk@ios.doi.gov.*

SUPPLEMENTARY INFORMATION: Executive Order 13175 directs all Federal agencies to ensure consultation and coordination with Indian tribal governments on Federal actions that will affect tribal governments. Under Public Law 108–199, this consultation policy also applies to corporations established under the Alaska Native Claims Settlement Act (ANCSA). Federal agencies are therefore required to consult and coordinate with ANCSA corporations on the same basis as Indian tribes in developing policies that would affect these corporations and their tribal shareholders. To implement these requirements, the Department is proposing and seeking comments on a draft consultation policy to govern all activities that will affect ANCSA corporations. Copies of the draft policy are available at the address given in the **ADDRESSES** section of this notice.

Before including your address, phone number, email address, or other personal identifying information in your comment, you should be aware that your entire comment—including your personal identifying information—may be made publicly available at any time. While you can ask us in your comment to withhold your personal identifying information from public review, we cannot guarantee that we will be able to do so.

Dated: February 17, 2012.

David J. Hayes,

Deputy Secretary of the Interior.

[FR Doc. 2012–4393 Filed 2–24–12; 8:45 am]

BILLING CODE 4310–10–P

DEPARTMENT OF THE INTERIOR

Office of the Secretary

National Commission on Indian Trust Administration and Reform

AGENCY: Office of the Secretary, Interior.

ACTION: Notice of meeting; correction.

SUMMARY: The Office of the Secretary published a document in the **Federal Register** of February 3, 2012, announcing the first meeting of the National Commission on Indian Trust Administration and Reform (the Commission). This notice corrects the times and address of the first meeting and extends the RSVP date to February 29, 2012.

DATES: *Effective Date:* The Commission's first meeting will occur from 9 a.m.–5 p.m. on March 1, 2012, and 9 a.m.–5 p.m. on March 2, 2012. Attendance is open to the public, but limited space is available. Members of the public who wish to attend should RSVP by February 29, 2012 to: *trustcommission@ios.doi.gov.*

ADDRESSES: The first meeting will be held at National Park Service, 1201 Eye Street, NW., Conference Room 202, Washington, DC 20005.

FOR FURTHER INFORMATION CONTACT: The Designated Federal Officer, Jodi Gillette, Deputy Assistant Secretary—Indian Affairs, 1849 C Street, NW., Washington, DC 20240; telephone (202) 208–7163; or email to *Jodi.Gillette@bia.gov.* Members of the public who wish to attend the meeting should RSVP by February 29, 2012, to: *trustcommission@ios.doi.gov.*

SUPPLEMENTARY INFORMATION:

Corrections

In the **Federal Register** of February 3, 2012, in FR Doc. 2012–2401, on page 5528, in the first column, correct the times listed in the **DATES** section with the following:

The Commission's first meeting will occur from 9 a.m.–5 p.m. on March 1, 2012, and 9 a.m.–5 p.m. on March 2, 2012.

In the same issue of the **Federal Register**, replace the address in the **ADDRESSES** section with the following: National Park Service, 1201 Eye Street, NW., Conference Room 202, Washington, DC 20005.

Dated: February 22, 2012.

David J. Hayes,

Deputy Secretary.

[FR Doc. 2012–4554 Filed 2–24–12; 8:45 am]

BILLING CODE 4310–W7–P

DEPARTMENT OF THE INTERIOR

U.S. Geological Survey

[GX12GC009PLSG0]

Agency Information Collection: Comment Request AGENCY: United States Geological Survey (USGS), Interior

ACTION: Notice of an extension of a currently approved collection (1028–0088).

SUMMARY: To comply with the Paperwork Reduction Act of 1995 (PRA), we are notifying the public that we will submit to OMB an extension of a currently approved information collection for the National Cooperative Geologic Mapping Program (NCGMP)—EDMAP and STATEMAP. As required by the Paperwork Reduction Act (PRA) of 1995, and as part of our continuing efforts to reduce paperwork and respondent burden, we invite the general public and other Federal agencies to take this opportunity to comment on this Information Collection (IC). The existing IC is scheduled to expire on August 31, 2012.

DATES: You must submit comments on or before April 27, 2012.

ADDRESSES: Please submit a copy of your written comments to USGS Information Collection Clearance Officer, U.S. Geological Survey, 12201 Sunrise Valley Drive, MS 807, Reston, VA 20192 (mail); 703–648–7199 (fax); or *smbaloch@usgs.gov.* Please reference Information Collection 1028–0088, NCGMP EDMAP and STATEMAP.

FOR FURTHER INFORMATION CONTACT: Douglas A. Howard, Associate Program Coordinator NCGMP (STATEMAP and EDMAP), USGS Geological Survey, 12201 Sunrise Valley Drive, MS 908, 20192 (mail); at 703–648–6978 (telephone); or *dahoward@usgs.gov* (email).

SUPPLEMENTARY INFORMATION:

Title: National Cooperative Geologic Mapping Program (NCGMP–EDMAP and STATEMAP).

OMB Control Number: 1028–0088.

Abstract: EDMAP is the educational component of the NCGMP that is intended to train the next generation of geologic mappers. The NCGMP allocates funds to colleges and universities in the United States and Puerto Rico through an annual competitive cooperative agreement process. Every federal dollar that is awarded is matched with university funds. Geology professors, who are skilled in geologic mapping, request EDMAP funding to support undergraduate and graduate students at their college or university in a one-year mentored geologic mapping project that focuses on a specific geographic area. Each fall, the program announcement is posted to the Grants.gov Web site and respondents are required to submit applications (comprising of Standard Form 424, 424A, 424B, a Negotiated Rate Agreement, a Support letter from State Geologist or USGS Project Chief, an EDMAP Proposal Summary Sheet, the Proposal, and Budget Sheets) using Grants.gov.

Since 1996, more than $5 million from the NCGMP have supported geologic mapping efforts of more than 1,000 students working with more than 244 professors at 148 universities in 44 states, the District of Columbia, and Puerto Rico. Funds for graduate projects are limited to $17,500 and undergraduate project funds limited to $10,000. These funds are used to cover field expenses and student salaries, but not faculty salaries. The authority for the program is listed in the National Geologic Mapping Act (Pub. L. 106–148).

We will protect information from respondents considered proprietary under the Freedom of Information Act (5 U.S.C. 552) and it's implementing regulations (43 CFR Part 2), and under regulations at 30 CFR 250.197, ''Data and information to be made available to the public or for limited inspection.'' Responses are voluntary. No questions of a ''sensitive'' nature are asked.

Frequency of Collection: Annually.

Respondent's Obligation: Voluntary (necessary to receive funding).

Estimated Number and Description of Respondents: Approximately 50 University/College Professors or faculty advisors annually.

Annual Burden Hours: 1,640 hours.

Estimated Annual Reporting and Recordkeeping ''Hour'' Burden: We expect to receive approximately 50 applications each year which takes each applicant approximately 20 hours to complete, totaling 1,000 hours. This includes the time for project conception and development, proposal writing and reviewing, and submitting a project narrative through Grants.gov. We expect to issue 40 grants per year. The grant recipients are also required to submit a final technical report which takes each grant recipient approximately 16 hours to complete, totaling 640 hours.

Estimated Annual Reporting and Recordkeeping ''Non-Hour Cost'': We have not identified any ''non-hour cost'' burdens associated with this collection of information.

Public Disclosure Statement: The PRA (44 U.S.C. 3501, *et seq.*) provides that an agency may not conduct or sponsor and

you are not required to respond to, a collection of information unless it displays a currently valid OMB control number.

Comments: We invite comments concerning this IC on: (a) Whether the proposed collection of information is necessary for the agency to perform its duties, including whether the information is useful; (b) the accuracy of the agency's estimate of the burden of the proposed collection of information; (c) ways to enhance the quality, usefulness, and clarity of the information to be collected; and (d) ways to minimize the burden on the respondents, including the use of automated collection techniques or other forms of information technology. Please note that any comments submitted in response to this notice are a matter of public record. Before including your address, phone number, email address or other personal identifying information in your comment, you should be aware that your entire comment including your personal identifying information, may be made publically available at any time. While you can ask OMB in your comment to withhold your personal identifying information from public review, we cannot guarantee that will be done.

Dated: February 17, 2012.

Douglas A. Howard,

Associate Program Coordinator, National Cooperative Geologic Mapping Program.

[FR Doc. 2012–4442 Filed 2–24–12; 8:45 am]

BILLING CODE 4311–AM–P

DEPARTMENT OF THE INTERIOR

Bureau of Land Management

[LLAZ910000.L12100000.XP0000LXSS150A00006100.241A]

State of Arizona Resource Advisory Council Meetings

AGENCY: Bureau of Land Management, Interior.

ACTION: Notice of public meetings.

SUMMARY: In accordance with the Federal Land Policy and Management Act of 1976 and the Federal Advisory Committee Act of 1972, the U.S. Department of the Interior, Bureau of Land Management (BLM), Arizona Resource Advisory Council (RAC) will meet in Phoenix, Arizona, as indicated below.

DATES: The RAC Working Groups will meet on March 27, from 8 a.m. until 5 p.m. The Business meeting will be held on March 29, from 8 a.m. until 4 p.m. The Council, guests, and BLM staff will spend the day March 28 on a tour of renewable energy projects.

ADDRESSES: The meetings will be held at the BLM National Training Center located at 9828 North 31st Avenue, Phoenix, Arizona 85051.

FOR FURTHER INFORMATION CONTACT: Dorothea Boothe, Arizona RAC Coordinator at the Bureau of Land Management, Arizona State Office, One North Central Avenue, Suite 800, Phoenix, Arizona 85004–4427, 602–417–9504. Persons who use a telecommunications device for the deaf (TDD) may call the Federal Information Relay Service (FIRS) at 1–800–877–8339 to contact the above individual during normal business hours. The FIRS is available 24 hours a day, 7 days a week, to leave a message or question with the above individual. You will receive a reply during normal business hours.

SUPPLEMENTARY INFORMATION: The 15-member Council advises the Secretary of the Interior, through the Bureau of Land Management, on a variety of planning and management issues associated with public land management in Arizona. Planned agenda items include: a welcome and introduction of Council members; BLM State Director's update on BLM programs and issues; updates on the Arizona Strategies, land use planning and public involvement, Abandoned Mine Lands, ASARCO Land Exchange, cultural heritage resource issues, and renewable energy projects; RAC questions on District Managers' Reports; reports by the RAC Working Groups; and other items of interest to the RAC. Members of the public are welcome to attend the Working Group and Business meetings. A public comment period is scheduled on the day of the Business meeting from 11:30 a.m. to Noon for any interested members of the public who wish to address the Council on BLM or Forest Service recreation fee programs and business. Depending on the number of persons wishing to speak and time available, the time for individual comments may be limited. Written comments may also be submitted during the meeting for the RAC's consideration. Final meeting agendas will be available two weeks prior to the meetings and posted on the BLM Web site at: *http://www.blm.gov/az/st/en/res/rac.html.* Individuals who need special assistance, such as sign language interpretation or other reasonable accommodations, should contact the RAC Coordinator listed above no later than two weeks before the start of the meeting. Under the Federal Lands Recreation Enhancement Act, the RAC has been designated as the Recreation Resource Advisory Council (RRAC) and has the authority to review all BLM and Forest Service recreation fee proposals in Arizona. The RRAC will not review any recreation fee proposals at this meeting.

Raymond Suazo,

State Director.

[FR Doc. 2012–4444 Filed 2–24–12; 8:45 am]

BILLING CODE 4310–32–P

DEPARTMENT OF THE INTERIOR

Bureau of Land Management

[LLWY910000 L16100000 XX0000]

Public Meeting; Wyoming Resource Advisory Council

AGENCY: Bureau of Land Management, Interior.

ACTION: Notice.

SUMMARY: In accordance with the Federal Land Policy and Management Act and the Federal Advisory Committee Act of 1972, the U.S. Department of the Interior, Bureau of Land Management (BLM) Wyoming Resource Advisory Council (RAC) will meet as indicated below.

DATES: The meetings will be held March 28 (8 a.m.–5 p.m.) and March 29 (8 a.m.–3 p.m.), 2012.

ADDRESSES: The meeting will be at the Hilton Garden Inn and University of Wyoming Conference Center, 2229 Grand Avenue, Laramie, WY 82070.

FOR FURTHER INFORMATION CONTACT: Cindy Wertz, Wyoming Resource Advisory Council Coordinator, Wyoming State Office, 5353 Yellowstone, Cheyenne, WY 82009; telephone 307–775–6014; email *cwertz@blm.gov.*

Persons who use a telecommunications device for the deaf (TDD) may call the Federal Information Relay Service (FIRS) at 1–800–877–8339 to contact the above individual during normal business hours. The FIRS is available 24 hours a day, 7 days a week, to leave a message or question with the above individual. You will receive a reply during normal business hours.

SUPPLEMENTARY INFORMATION: This 10-member RAC advises the Secretary of the Interior on a variety of management issues associated with public land management in Wyoming.

Planned agenda topics include an update from the University of Wyoming faculty on current projects and research, follow-up on last meeting's planning and cooperating agency discussion, and

an update on restoration and reclamation projects.

All RAC meetings are open to the public with time allocated for hearing public comments. On March 29, there will be a 30-minute public comment period at 1 p.m. The public may also submit written comments to the RAC. Depending on the number of persons wishing to comment and time available, the time for individual oral comments may be limited.

Larry Claypool,

Acting State Director.

[FR Doc. 2012–4565 Filed 2–24–12; 8:45 am]

BILLING CODE 4310–22–P

DEPARTMENT OF THE INTERIOR

National Park Service

[2410–OYC]

Notice of Extension of Visitor Services—Mount Rainier National Park

AGENCY: National Park Service, Interior.

ACTION: Notice.

SUMMARY: Under the terms of the existing concession contract, the National Park Service intends to request an extension of visitor services in Mount Rainier National Park for a period not to exceed one year from the expiration date of the current contract.

DATES: *Effective Date:* January 1, 2013.

FOR FURTHER INFORMATION CONTACT: Deborah Harvey, Acting Chief, Commercial Services Program, National Park Service, 1201 Eye Street NW., 11th Floor, Washington, DC 20005; Telephone: 202–513–7156.

SUPPLEMENTARY INFORMATION: The listed concession authorization will expire by its terms on December 31, 2012. The National Park Service has determined that the proposed extension is necessary in order to avoid interruption of visitor services and has taken all reasonable and appropriate steps to consider alternatives to avoid such interruption.

Concession ID No.	Concessioner name	Park
MORA002–88	Guest Services, Inc	Mount Rainier National Park.

Jo A. Pendry,

Acting Associate Director, Business Services.

[FR Doc. 2012–4372 Filed 2–24–12; 8:45 am]

BILLING CODE 4312–53–P

DEPARTMENT OF THE INTERIOR

National Park Service

[2253–665]

Notice of Intent To Repatriate Cultural Items: American Museum of Natural History, New York, NY

AGENCY: National Park Service, Interior.

ACTION: Notice.

SUMMARY: The American Museum of Natural History, in consultation with the appropriate Indian tribes, has determined that cultural items meet the definition of unassociated funerary objects and that repatriation to the Indian tribe stated below may occur if no additional claimants come forward. Representatives of any Indian tribe that believes itself to be culturally affiliated with the cultural items may contact the American Museum of Natural History.

DATES: Representatives of any Indian tribe that believes it has a cultural affiliation with the cultural items should contact the American Museum of Natural History at the address below by March 28, 2012.

ADDRESSES: Nell Murphy, Director of Cultural Resources, American Museum of Natural History, Central Park West at 79th Street, New York, NY 10024, telephone (212) 769–5837.

SUPPLEMENTARY INFORMATION: Notice is here given in accordance with the Native American Graves Protection and Repatriation Act (NAGPRA), 25 U.S.C. 3005, of the intent to repatriate cultural items in the possession of the American Museum of Natural History that meet the definition of unassociated funerary objects under 25 U.S.C. 3001.

This notice is published as part of the National Park Service's administrative responsibilities under NAGPRA, 25 U.S.C. 3003(d)(3). The determinations in this notice are the sole responsibility of the museum, institution or Federal agency that has control of the Native American cultural items. The National Park Service is not responsible for the determinations in this notice.

History and Description of the Cultural Items

The 34 cultural items include: a headdress on a spruce frame decorated with swan down, white eagle tail feathers, and a plume of red-fox tail, that is attached to a wooden mask painted black and green, representing a Tlingit spirit; a headdress on a spruce frame, covered with swan down, white eagle tail feathers, and a plume of brown bear fur, that is attached to a wooden mask painted black and green, representing the spirit of a dead Tlingit; a headdress on a spruce frame covered with swan down, white eagle tail feathers, and plaits of human hair, that is attached to a wooden mask representing a dying man; a headdress on a spruce frame, covered with swan down, white eagle tail feathers, red fox fur, and plaits of human hair, that is attached to a wooden mask representing the spirit of a dead Tlingit; a headdress made of hawk skin and attached to a wooden mask carved to represent a mosquito; a headdress made of deer skin, ptarmigan skin, and ornamented in porcupine quill work and mountain goat horns; a hat made of skin with a bark cover and a carved raven's head; a headdress of deer skin ornamented with eagle tails and sea lion whiskers; a skin drum framed in wood and metal; a crown composed of mountain goat horns and ermine skins, that is inlaid with haliotis shell; a wooden rattle carved in bird and land otter designs and painted green, red, and black; two wooden rattles ornamented with bird beaks and decorated with eagle down; a wooden dance ornament carved to represent a cockle shell; two bundles of sticks, bone spikes and feathers wrapped around an animal tongue; a bone bracelet ornamented in cuts and lines with a plant fiber fastener; a neck ornament composed of hide and two walrus ivory rings; four ivory charms carved to represent land otters; an ivory charm carved to represent a whale; an ivory charm carved to represent a black fish; an ivory charm carved to represent a halibut; a wooden stick carved to represent a wolf and a bear; a skin waist robe decorated with ivory, bone, deer hooves and brass ornaments; a skin shoulder robe decorated with walrus ivory rings and painted to represent spirits and a dog fish; two string necklaces decorated with bone and ivory pendants; a hair ornament of ivory and bone beads; a stick decorated with deer dew hooves; a headdress consisting of a skin band decorated with swan skin, the neck feathers of a mallard drake, and white eagle tail feathers, attached to carved wooden masks representing the shaman's spirits or guards; and a wooden box decorated with carvings of a bear and a raven.

Museum records and consultation information provided by Kootznoowoo, Incorporated (an Alaska Native

Corporation), and the Central Council Tlingit and Haida Indian Tribes of Alaska support the conclusion that these cultural items comprise the shaman's kit of Nolk, a Hutsnuwu Tlingit of the *Dakl'aweidi* clan, and that they were placed within Nolk's grave house near Chaik Bay at or after the time of his death around 1865. The kit was removed from the grave house by a nephew of Nolk at an unknown date and subsequently acquired by Lieutenant George Thornton Emmons. The Museum purchased these items from Emmons and accessioned them in 1894.

The determination that these items are ''unassociated funerary objects'' is based on Emmons' catalog entry, consultation information provided by Kootznoowoo, Incorporated, and the Central Council Tlingit and Haida Indian Tribes of Alaska, and other expert opinion, all of which support the conclusion that the items were associated with Nolk's grave house, and were placed with Nolk's remains either at the time of his death or later.

The cultural affiliation of the 34 cultural items is Hutsnuwu Tlingit, as indicated through museum records and consultation with representatives of Kootznoowoo Incorporated, and the Central Council Tlingit and Haida Indian Tribes of Alaska. Chaik Bay lies within the traditional territory of the Hutsnuwu Tlingit. These cultural items were claimed on behalf of the *Da_l'aweidi* clan.

Determinations Made by the American Museum of Natural History

Officials of the American Museum of Natural History have determined that:

- Pursuant to 25 U.S.C. 3001(3)(B), the 34 cultural items described above are reasonably believed to have been placed with or near individual human remains at the time of death or later as part of the death rite or ceremony and are believed, by a preponderance of the evidence, to have been removed from a specific burial site of a Native American individual.
- Pursuant to 25 U.S.C. 3001(2), there is a relationship of shared group identity that can be reasonably traced between the unassociated funerary objects and the Central Council Tlingit and Haida Indian Tribes of Alaska.

Additional Requestors and Disposition

Representatives of any other Indian tribe that believes itself to be culturally affiliated with the unassociated funerary objects should contact Nell Murphy, Director of Cultural Resources, American Museum of Natural History, Central Park West at 79th Street, New York, NY 10024, telephone (212) 769–5837, before March 28, 2012. Repatriation of the unassociated funerary objects to the Central Council Tlingit and Haida Indian Tribes of Alaska may proceed after that date if no additional claimants come forward.

Dated: February 22, 2012.

Sherry Hutt,

Manager, National NAGPRA Program.

[FR Doc. 2012–4523 Filed 2–24–12; 8:45 am]

BILLING CODE 4312–50–P

DEPARTMENT OF THE INTERIOR

National Park Service

[2253–665]

Notice of Intent To Repatriate Cultural Items: U.S. Department of Defense, Army Corps of Engineers, Walla Walla District, Walla Walla, WA, and the University of Oregon Museum of Natural and Cultural History, Eugene, OR

AGENCY: National Park Service, Interior.

ACTION: Notice.

SUMMARY: The United States Department of Defense, Army Corps of Engineers, Walla Walla District, in consultation with the appropriate Indian tribes, has determined that the items in this notice meet the definition of unassociated funerary objects and repatriation to the Indian tribes stated below may occur if no additional claimants come forward. Representatives of any Indian tribe that believes itself to be culturally affiliated with the cultural items may contact the U.S. Department of Defense, Army Corps of Engineers, Walla Walla District.

DATES: Representatives of any Indian tribe that believes it has a cultural affiliation with the cultural items should contact U.S. Department of Defense, Army Corps of Engineers, Walla Walla District at the address below by March 28, 2012.

ADDRESSES: LTC David Caldwell, U.S. Department of Defense, Army Corps of Engineers, Walla Walla District, 201 North Third Ave., Walla Walla, WA 99362, telephone (509) 527–7700.

SUPPLEMENTARY INFORMATION: Notice is here given in accordance with the Native American Graves Protection and Repatriation Act (NAGPRA), 25 U.S.C. 3005, of the intent to repatriate cultural items under the control of the U.S. Department of Defense, Army Corps of Engineers, Walla Walla District (Corps), Walla Walla, WA, and in the physical custody of the University of Oregon Museum of Natural and Cultural History (UO–MNCH), Eugene, OR, that meet the definition of unassociated funerary objects under 25 U.S.C. 3001.

This notice is published as part of the National Park Service's administrative responsibilities under NAGPRA, 25 U.S.C. 3003(d)(3). The determinations in this notice are the sole responsibility of the museum, institution or Federal agency that has control of the cultural items. The National Park Service is not responsible for the determinations in this notice.

History and Description of the Cultural Items

The unassociated funerary objects included in this notice were all removed from sites located within the McNary Lock and Dam Project on the Columbia River. The McNary Lock and Dam Project is managed by the Corps, who initiated land acquisition processes for the Project in 1947.

In 1948, the Smithsonian Institution's River Basin Survey Project (SRBS) removed human remains and funerary objects from site 45BN3, a pre-contact protohistoric village site located on Berrian's Island, in the Columbia River, in Benton County, WA. The recovered collections were transferred to three separate repositories: The Smithsonian Institution; the University of Washington (UW) Burke Museum, Seattle, WA; and UO–MNCH, Eugene, OR. The portion of the collections in the physical custody of UO–MNCH was re-inventoried in 1996, under a contract with the Corps. Unassociated funerary objects in the collection were recovered from Burials 4–5, 7–9, 11–15, 19, 22, 24–26, 32, 34, 36–37, 39, 41, 43, 45–46, 48–49, and 51–54. The 189 unassociated funerary objects are 1 abalone pendant, 3 antler digging stick handles, 1 antler wedge, 1 antler wedge fragment, 2 arrow-shaft smoothers, 1 arrow-shaft smoother fragment, 2 arrow-shaft straighteners, 2 bear canines (badly decayed), 1 bird bone fragment, 1 bird effigy charm stone, 3 bivalves, 3 perforated bivalves, 1 broken chalcedony blade, 7 blue trade beads, 1 bone comb, 2 bone fragments, 1 bone pin, 1 brass pendant, 2 carved bone fragments, 1 celt fragment, 1 serpentine celt (unfinished), 1 chacedony drill, 2 choppers, 1 copper fragment, 1 copper pendant, 1 copper pendant fragment, 8 copper tube beads, 4 incised Dentalia shells, 3 Dentalia shells, 3 lots of Dentalia shells/fragments, 1 broken drill, 1 petrified wood drill (in 2 pieces), 2 drilled bear claws, 1 eagle bone whistle, 2 flakes, 1 flesher, 9 glass beads, 1 Glycymeris fragment, 1 graver or drill, 1 hook-shaped charmstone, 1 iron tinkler, 1 iron blade, 1 knife, 2

knife fragments, 1 crushed metal button, 1 shanked and drilled metal button, 2 Olivella shells, 1 Olivella shell fragment, 1 lot of Olivella shell beads, 6 lots of Olivella shells, 1 oval blade, 2 pendants, 2 perforated shells, 1 pestle, 1 broken pestle (3 pieces, repaired), 1 basalt pestle, 1 petrified wood knife, 1 pink chalcedony knife, 6 projectile points, 1 point or blade, 1 point or drill, 1 broken obsidian projectile point, 1 chalcedony point, 1 petrified wood point, 1 broken petrified wood point, 1 while flint point, 1 scoria file or whetstone, 10 scrapers, 1 brown agate scraper, 2 chalcedony scrapers, 1 flint scraper, 13 shells, 2 shell beads, 2 lots of shell beads, 2 shell pendants, 1 silver pendant, 2 carved slate effigies, 2 carved slate effigies with ochre on surface, 1 incised slate effigy, 1 smooth burned stone, 7 smooth stones, 1 soapstone pipe bowl fragment, 2 soil samples, 1 steatite pipe, 1 steatite spoon, 1 stone mallet/maul, 1 unidentified stone object, 1 serpentine stone pendant, 3 strings of juniper beads, 1 string of Olivella shell and wooden beads, 1 drilled thimble, 1 tubular stone pipe, 1 lot of wooden beads, 1 worked bone or tube bead (burned), 1 mammal incisor, 1 worked deer incisor, and 1 worked tooth or antler wedge (badly decayed).

In 1947, the SRBS removed human remains and funerary objects from previously disturbed burials at 45BN45 (aka 45BN186), located on an island in the Columbia River, in Benton County, WA. The 1947 SRBS collection was transported to Fort Vancouver National Monument in Vancouver, WA. In 1960, a portion of the collection was transferred to and accessioned by UO–MNCH (OSMA accession #102). The unassociated funerary objects were described as originating from the backdirt piles of one or more disturbed burials identified at the site. The ten unassociated funerary objects are 1 copper pendant, 3 metal fragments, and 6 glass beads. The site consisted of a village and burial site dating to the late pre-contact protohistoric period or earlier.

In 1947, SRBS removed funerary objects from burials at 45FR28, on Borgan's Island, in Benton County, WA. At the time, 45FR28 was reported to contain extensively disturbed burials marked by cedar posts and located in the sand dunes on the southern end of the island. It is unclear whether or not human remains were collected during this survey. Materials from the 1947 SRBS investigations were transported to Fort Vancouver National Monument, in Vancouver, WA. In 1960, the collection was transferred to UO–MCNH (OSMA accession #202). Funerary objects were reportedly removed from Burials 1 and 2. The 14 unassociated funerary objects are 1 lot of clamshell disk beads, 1 lot of plant seed beads, 2 lots of Olivella shell beads, 1 lot of dentalium shells, 1 individual dentalium, 4 copper fragments, 1 projectile point fragment, 1 lot of hair, 1 lot of hair and fiber, and 1 iron spike. The site consisted of burials of the proto-historic to historic period date. The burial methods and artifacts are consistent with Plateau funerary practices during that era.

Prior to 1950 or 1951, funerary objects were recovered on an island north of Hover, Benton County, WA, in direct association with a burial. The ''Island North of Hover'' funerary objects were donated by a private party to the UO–MNCH in 1950 or 1951. No human remains were donated. The collection was re-inventoried by UO–MNCH in 1996, under a contract with the Corps. The 57 unassociated funerary objects are 23 decorated bird bones, 1 decorated animal bone, 4 grooved bones, 1 slotted bone, 2 projectile points, 1 pipe, 5 shell beads, 2 stone beads, 4 shell pendants, 2 jasper pendants, 3 stone pendants, 1 graphite pendant, 1 needle or awl, 5 elk incisors, 1 badger claw, and 1 carnivore claw.

Determinations Made by the U.S. Department of Defense, Army Corps of Engineers, Walla Walla District

Officials of the U.S. Department of Defense, Army Corps of Engineers, Walla Walla District, have determined that:

- Five lines of evidence—geographical, ethnographic, archeological, anthropological and historical—support a cultural affiliation between the Confederated Tribes and Bands of the Yakama Nation, Washington; Confederated Tribes of the Colville Reservation, Washington; Confederated Tribes of the Umatilla Indian Reservation, Oregon; Confederated Tribes of Warm Springs Reservation, Oregon; and the Nez Perce Tribe, Idaho (hereinafter referred to as ''The Tribes'') and the unassociated funerary objects identified above. Additionally, a cultural relationship is determined to exist between the sites and collections and the Wanapum Band, a non-Federally recognized Indian Group (hereinafter referred to as ''The Indian Group'').
- Pursuant to 25 U.S.C. 3001(3)(B), the 270 cultural items described above are reasonably believed to have been placed with or near individual human remains at the time of death or later as part of the death rite or ceremony and are believed, by a preponderance of the evidence, to have been removed from the specific burial sites of Native American individuals.
- Pursuant to 25 U.S.C. 3001(2), there is a relationship of shared group identity that can be reasonably traced between the unassociated funerary objects, The Tribes and The Indian Group. Information provided by The Tribes and The Indian Group shows that they are descended from the Native people who occupied these sites, and that the individuals buried along the Snake and mid-Columbia Rivers are their ancestors. The aforementioned tribes are all part of the more broadly defined Plateau cultural community having shared past and present traditional lifeways that binds them to common ancestors.

Additional Requestors and Disposition

Representatives of any other Indian tribe that believes itself to be culturally affiliated with the unassociated funerary objects should contact LTC David Caldwell, U.S. Department of Defense, Army Corps of Engineers, Walla Walla District, 201 North Third Ave., Walla Walla, WA 99362, telephone (509) 527–7700, before March 28, 2012. Repatriation of the unassociated funerary objects to The Tribes and (if joined) The Indian Group may proceed after that date if no additional claimants come forward.

The U.S. Department of Defense, Army Corps of Engineers, Walla Walla District, is responsible for notifying The Tribes and The Indian Group that this notice has been published.

Dated: February 22, 2012.

Sherry Hutt,

Manager, National NAGPRA Program.

[FR Doc. 2012–4507 Filed 2–24–12; 8:45 am]

BILLING CODE 4312–50–P

DEPARTMENT OF THE INTERIOR

National Park Service

[2253–665]

Notice of Intent To Repatriate Cultural Items: USDA Forest Service, Coconino National Forest, Flagstaff, AZ

AGENCY: National Park Service, Interior.

ACTION: Notice.

SUMMARY: The USDA Forest Service, Coconino NF, in consultation with the appropriate Indian tribe, has determined that the cultural items meet the definition of unassociated funerary objects and repatriation to the Indian tribe stated below may occur if no additional claimants come forward. Representatives of any Indian tribe that believes itself to be culturally affiliated

with the cultural items may contact the USDA Forest Service, Southwestern Region.

DATES: Representatives of any Indian tribe that believes it has a cultural affiliation with the cultural items should contact the USDA Forest Service, Southwestern Region at the address below by March 28, 2012.

ADDRESSES: Dr. Frank E. Wozniak, NAGPRA Coordinator, Southwestern Region, USDA Forest Service, 333 Broadway Blvd. SE., Albuquerque, NM 87102, telephone (505) 842–3238.

SUPPLEMENTARY INFORMATION: Notice is here given in accordance with the Native American Graves Protection and Repatriation Act (NAGPRA), 25 U.S.C. 3005, of the intent to repatriate cultural items under the control of the Coconino National Forest and in the custody of the Museum of Northern Arizona that meet the definition of unassociated funerary objects under 25 U.S.C. 3001. These unassociated funerary objects were removed from sites within the boundaries of the Coconino National Forest, Coconino County, AZ.

This notice is published as part of the National Park Service's administrative responsibilities under NAGPRA, 25 U.S.C. 3003(d)(3). The determinations in this notice are the sole responsibility of the museum, institution or Federal agency that has control of the Native American cultural items. The National Park Service is not responsible for the determinations in this notice.

History and Description of the Cultural Items

Between 1927 and 1929, two ceramic jars were removed from site NA 660 (Turkey Hill Pueblo) in Coconino County, AZ, during archeological excavations conducted by the University of Arizona and the Museum of Northern Arizona. The jars have been curated at the Museum of Northern Arizona since their removal.

Based on the ceramic collections and ceramic seriation, Turkey Hill Pueblo (site NA 660) is identified as a Northern Sinagua pueblo with pithouses that were occupied during the second half of the 13th and the first quarter of the 14th centuries A.D. Records at the Museum of Northern Arizona indicate that the items were removed from a burial context. The human remains were either left in the ground or are not locatable at the present time.

Between 1938 and 1940, eight objects were removed from site NA 862 in Coconino County, AZ, during archeological excavations conducted by the Museum of Northern Arizona. The objects have been curated at the Museum of Northern Arizona since their removal. The eight unassociated funerary objects are three ceramic bowls, one ceramic jar, one ceramic ladle, one stone scraper, one stone pendant and one bone tool.

Based on the ceramic collection and ceramic seriation, site NA 862 is identified as a Northern Sinagua residential site that was occupied during the 11th and 12th centuries A.D. Records at the Museum of Northern Arizona indicate that the items were removed from a burial context. The human remains were either left in the ground or are not locatable at the present time.

Between 1931 and 1951, two objects were removed from site NA 1814 (Juniper Terrace Site) in Coconino County, AZ, during archeological excavations conducted by the Museum of Northern Arizona. The objects have been curated at the Museum of Northern Arizona since their removal. The two unassociated funerary objects are pupae casings and pottery sherds.

Based on the ceramic collection and ceramic seriation, the Juniper Terrace Site (site NA 1814) is identified as a group of Northern Sinagua roomblocks that were occupied during the second half of the 12th and the first half of the 13th centuries A.D. Records at the Museum of Northern Arizona indicate that the items were removed from a burial context. The human remains were either left in the ground or are not locatable at the present time.

During the 1950s, five objects were removed from site NA 4266 (Piper Site) in Coconino County, AZ, during archeological excavations conducted by the Museum of Northern Arizona. The objects have been curated at the Museum of Northern Arizona since their removal. The five unassociated funerary objects are three ceramic bowls, one ball of unworked clay and one shell bracelet.

Based on the ceramic collection and ceramic seriation, site NA 4266 has been identified as a Northern Sinagua residential site that was occupied during the 11th and 12th centuries A.D. Records at the Museum of Northern Arizona indicate that the items were removed from a burial context. The human remains were either left in the ground or are not locatable at the present time.

During the early 1970s, two objects were removed from site NA 10806 in Coconino County, AZ, during archeological excavations conducted by the Museum of Northern Arizona. The objects have been curated at the Museum of Northern Arizona since their removal. The two unassociated funerary objects are one clay figurine and one shell bracelet.

Based on the ceramic collection and ceramic seriation, site NA 10806 has been identified as a Northern Sinagua residential site that was occupied during the 10th and 12th centuries A.D. Records at the Museum of Northern Arizona indicate that the items were removed from a burial context. The human remains were either left in the ground or are not locatable at the present time.

Based on the archeological evidence, the sites listed above have been identified as Northern Sinagua sites. Continuities in ethnographic materials indicate a cultural affiliation of Northern Sinagua sites in the Flagstaff area of north central Arizona with the Hopi Tribe of Arizona. Furthermore, oral traditions presented by representatives of the Hopi Tribe of Arizona, support their claims of cultural affiliation with Northern Sinagua sites in this portion of north central Arizona.

Determinations Made by the USDA Forest Service, Southwestern Region

Officials of the USDA Forest Service, Southwestern Region, and the Coconino National Forest have determined that:

- Pursuant to 25 U.S.C. 3001(3)(B), the 19 cultural items described above are reasonably believed to have been placed with or near individual human remains at the time of death or later as part of the death rite or ceremony and are believed, by a preponderance of the evidence, to have been removed from a specific burial site of a Native American individual.
- Pursuant to 25 U.S.C. 3001(2), there is a relationship of shared group identity that can be reasonably traced between the unassociated funerary objects and the Hopi Tribe of Arizona.

Additional Requestors and Disposition

Representatives of any other Indian tribe that believes itself to be culturally affiliated with the unassociated funerary objects should contact Dr. Frank E. Wozniak, NAGPRA Coordinator, Southwestern Region, USDA Forest Service, 333 Broadway Blvd. SE., Albuquerque, NM 87102, (505) 842–3238 before March 28, 2012. Repatriation of the unassociated funerary objects to the Hopi Tribe, Arizona may proceed after that date if no additional claimants come forward.

The Coconino National Forest is responsible for notifying the Hopi Tribe of Arizona that this notice has been published.

Dated: February 22, 2012.

Sherry Hutt,

Manager, National NAGPRA Program.

[FR Doc. 2012–4519 Filed 2–24–12; 8:45 am]

BILLING CODE 4312–50–P

DEPARTMENT OF THE INTERIOR

National Park Service

[2253–665]

Notice of Intent To Repatriate Cultural Items: U.S. Department of Agriculture, Forest Service, Gila National Forest, Silver City, NM; Arizona State Museum, University of Arizona, Tucson, AZ; and Logan Museum of Anthropology, Beloit College, Beloit, WI; Correction

AGENCY: National Park Service, Interior.

ACTION: Notice; correction.

Notice is here given in accordance with the Native American Graves Protection and Repatriation Act (NAGPRA), 25 U.S.C. 3005, of the intent to repatriate cultural items in the control of the U.S. Department of Agriculture, Forest Service, Gila National Forest, Silver City, NM, and in the physical custody of the Arizona State Museum, University of Arizona, Tucson, AZ, that meet the definition of ''unassociated funerary objects'' under 25 U.S.C. 3001. The cultural items were removed from the Gila National Forest in Catron County, NM.

This notice is published as part of the National Park Service's administrative responsibilities under NAGPRA, 25 U.S.C. 3003(d)(3). The determinations in this notice are the sole responsibility of the museum, institution or Federal agency that has control of the unassociated funerary objects. The National Park Service is not responsible for the determinations in this notice.

This notice corrects the number of unassociated funerary objects removed from the Jewett Gap site. Additional unassociated funerary objects from the site were recently identified by staff at the Arizona State Museum, University of Arizona, AZ.

In the **Federal Register** (70 FR 31510, June 1, 2005), paragraph number six is corrected by substituting the following paragraph:

Between 1947 and 1949, cultural items were removed from the Jewett Gap site in the Gila National Forest, Catron County, NM, during excavations conducted by J. S. Deric O'Bryan of the Gila Pueblo Foundation. In 1950, the Gila Pueblo Foundation transferred the cultural items to the Arizona State Museum. The 920 cultural items are 190 pottery vessels, 608 shell beads, 8 shell bracelets, 5 shell pendants, 3 pebbles, 1 piece of shell, 4 pieces of bone, 8 projectile points, 2 projectile point fragments, 2 stone awls, 1 stone axe, 75 pieces of chipped stone, 7 pieces of malachite and 6 crystals. Based on material culture, architecture and site organization, the Jewett Gap site has been identified as an Upland Mogollon pueblo occupied between A.D. 600 and 1050.

In the **Federal Register** (70 FR 31510, June 1, 2005), paragraph number nine is corrected by substituting the following paragraph:

Officials of the U.S. Department of Agriculture, Forest Service, Gila National Forest, have determined that:

- Pursuant to 25 U.S.C. 3001(3)(B), the 966 cultural items described above are reasonably believed to have been placed with or near individual human remains at the time of death or later as part of the death rite or ceremony and are believed, by a preponderance of the evidence, to have been removed from a specific burial site of a Native American individual.
- Pursuant to 25 U.S.C. 3001(2), there is a relationship of shared group identity that can be reasonably traced between the unassociated funerary objects from the four Upland Mogollon sites and the Hopi Tribe of Arizona; Pueblo of Acoma, New Mexico; and the Zuni Tribe of the Zuni Reservation, New Mexico.

Additional Requestors and Disposition

Representatives of any other Indian tribe that believes itself to be culturally affiliated with the unassociated funerary objects should contact Dr. Frank E. Wozniak, NAGPRA Coordinator, Southwestern Region, USDA Forest Service, 333 Broadway Blvd. SE., Albuquerque, NM, telephone (505) 842–3238, before March 28, 2012. Repatriation of the unassociated funerary objects to the Hopi Tribe of Arizona; Pueblo of Acoma, New Mexico; and the Zuni Tribe of the Zuni Reservation, New Mexico, may proceed after that date if no additional claimants come forward.

The U.S. Department of Agriculture, Forest Service, Gila National Forest is responsible for notifying the Hopi Tribe of Arizona; Pueblo of Acoma, New Mexico; and the Zuni Tribe of the Zuni Reservation, New Mexico, that this notice has been published.

Dated: February 22, 2012.

Sherry Hutt,

Manager, National NAGPRA Program.

[FR Doc. 2012–4545 Filed 2–24–12; 8:45 am]

BILLING CODE 4312–50–P

DEPARTMENT OF THE INTERIOR

National Park Service

[2253–665]

Notice of Intent To Repatriate Cultural Items: Fowler Museum at UCLA, Los Angeles, CA

AGENCY: National Park Service, Interior.

ACTION: Notice.

SUMMARY: The Fowler Museum at UCLA, in consultation with the appropriate Indian tribes, has determined that the cultural items meet the definition of unassociated funerary objects and repatriation to the Indian tribe stated below may occur if no additional claimants come forward. Representatives of any Indian tribe that believes itself to be culturally affiliated with the cultural items may contact the Fowler Museum at UCLA.

DATES: Representatives of any Indian tribe that believes it has a cultural affiliation with the cultural items should contact the Fowler Museum at UCLA at the address below by March 28, 2012.

ADDRESSES: Wendy G. Teeter, Ph.D., Curator of Archaeology, Fowler Museum at UCLA, Box 951549, Los Angeles, CA 90095–1549, telephone (310) 825–1864.

SUPPLEMENTARY INFORMATION: Notice is here given in accordance with the Native American Graves Protection and Repatriation Act (NAGPRA), 25 U.S.C. 3005, of the intent to repatriate cultural items in the possession of the Fowler Museum at UCLA that meet the definition of unassociated funerary objects under 25 U.S.C. 3001.

This notice is published as part of the National Park Service's administrative responsibilities under NAGPRA, 25 U.S.C. 3003(d)(3). The determinations in this notice are the sole responsibility of the museum, institution or Federal agency that has control of the Native American cultural items. The National Park Service is not responsible for the determinations in this notice.

History and Description of the Cultural Items

In 1922, two unassociated funerary objects were removed from a burial at Gila River, AZ, by Frank Larsen. Subsequently, the two unassociated funerary objects, a jar and a figurine head, came into the possession of Raleigh W. Applegate in 1949. The Fowler Museum at UCLA acquired these unassociated funerary objects from Mr. Applegate in 1968 as part of a larger

southwestern materials collection. These unassociated funerary objects are currently in the control of the Fowler Museum at UCLA, Los Angeles, CA.

Expert testimony identified the jar and the figurine head as Late Preclassic Hohokam, dating to A.D. 900–1100. Nearly all of the Sacaton red-on-buff vessels were produced at a few villages on the Gila River, most of which are now on the Gila River Indian Reservation, AZ.

The Gila River Indian Community of the Gila River Indian Reservation, Arizona, has submitted a repatriation claim for the cultural items described in this notice, on behalf of itself and the Ak Chin Indian Community of the Maricopa (Ak Chin) Indian Reservation, Arizona; Salt River Pima-Maricopa Indian Community of the Salt River Reservation, Arizona; and the Tohono O'odham Nation of Arizona (hereinafter referred to as ''The Four Southern Tribes of Arizona'').

The Four Southern Tribes of Arizona assert a close relationship of shared group identity that can be traced both historically and prehistorically between The Four Southern Tribes of Arizona and the people that inhabited south central Arizona and the northern region of present day Mexico from time immemorial. Therefore, The Four Southern Tribes of Arizona claim cultural affiliation to the cultural items based on geographical, archeological, linguistic, oral tradition, and historical evidence. These affiliations include several archeological cultures including (but not limited to) the Archaic, Paleo-Indian, Hohokam, Salado, Patayan, and Sinagua.

The Hopi Tribe of Arizona claims cultural and ancestral affiliation to all human remains, associated and unassociated funerary objects, sacred objects, and objects of cultural patrimony that were collected from Paleo-Indian, Archaic, Basketmaker, Hisatsinom (Anasazi), Mogollon, Hohokam, Sinaguan, Fremont, Mimbres, and Salado, prehistoric and historic cultures of the Southwest.

Based on Zuni oral teachings and tradition, ethnohistoric documentation, historic documentation, archeological documentation, and other evidence, the Zuni Tribe of the Zuni Reservation, New Mexico, claims cultural affiliation with prehistoric cultures of the southwestern United States that include, and are known as, Paleo Indian, Archaic, Basketmaker, Puebloan, Freemont, Anasazi, Mogollon (including Mimbres and Jornada), Hohokam, Sinagua, Western Pueblo, and Salado. In addition, the Zuni Tribe of the Zuni Reservation, New Mexico, claims cultural affiliation with the historically identified Zuni, Cibola, Shiwi, and Ashiwi cultures.

Determinations Made by the Fowler Museum at UCLA

Officials of the Fowler Museum at UCLA have determined that:

- Pursuant to 25 U.S.C. 3001(3)(b), the two cultural items described above are reasonably believed to have been placed with or near individual human remains at the time of death or later as part of the death rite or ceremony and are believed, by a preponderance of the evidence, to have been removed from a specific burial site of a Native American individual.
- Pursuant to 25 U.S.C. 3001(2), there is a relationship of shared group identity that can be reasonably traced between the unassociated funerary objects and the Ak Chin Indian Community of the Maricopa (Ak Chin) Indian Reservation, Arizona; Gila River Indian Community of the Gila Indian Reservation, Arizona; Hopi Tribe of Arizona; Salt River Pima-Maricopa Indian Community of the Salt River Reservation, Arizona; Tohono O'odham Nation of Arizona; and the Zuni Tribe of the Zuni Reservation, New Mexico.

Additional Requestors and Disposition

Representatives of any other Indian tribe that believes itself to be culturally affiliated with the unassociated funerary objects should contact Wendy G. Teeter, Ph.D., Curator of Archaeology, Fowler Museum at UCLA, Box 951549, Los Angeles, CA 90095–1549, telephone (310) 825–1864, before March 28, 2012. Repatriation of the unassociated funerary objects to the Gila River Indian Community of the Gila River Indian Reservation, Arizona, on behalf of The Four Southern Tribes of Arizona, may proceed after that date if no additional claimants come forward.

The Fowler Museum at UCLA is responsible for notifying The Four Southern Tribes of Arizona, the Hopi Tribe of Arizona and the Zuni Tribe of the Zuni Reservation, New Mexico, that this notice has been published.

Dated: February 22, 2012.

Sherry Hutt,

Manager, National NAGPRA Program.

[FR Doc. 2012–4542 Filed 2–24–12; 8:45 am]

BILLING CODE 4312–50–P

DEPARTMENT OF THE INTERIOR

National Park Service

[2253–665]

Notice of Inventory Completion: Bishop Museum, Honolulu, HI

AGENCY: National Park Service, Interior.

ACTION: Notice.

SUMMARY: The Bishop Museum has completed an inventory of human remains in consultation with the appropriate Indian tribe, and has determined that there is a cultural affiliation between the human remains and a present-day Indian tribe. Representatives of any Indian tribe that believes itself to be culturally affiliated with the human remains may contact the Bishop Museum. Repatriation of the human remains to the tribe stated below may occur if no additional claimants come forward.

DATES: Representatives of any Indian tribe that believes it has a cultural affiliation with the human remains should contact the Bishop Museum at the address below by March 28, 2012.

ADDRESSES: Betty Lou Kam, Vice President, Cultural Collections, Bishop Museum, 1525 Bernice St., Honolulu, HI 96817, telephone (808) 848–4144.

SUPPLEMENTARY INFORMATION: Notice is here given in accordance with the Native American Graves Protection and Repatriation Act (NAGPRA), 25 U.S.C. 3003, of the completion of an inventory of human remains in the possession of the Bishop Museum. The human remains were removed from western North America, most likely from north-central California.

This notice is published as part of the National Park Service's administrative responsibilities under NAGPRA, 25 U.S.C. 3003(d)(3). The determinations in this notice are the sole responsibility of the museum, institution or Federal agency that has control of the Native American human remains. The National Park Service is not responsible for the determinations in this notice.

Consultation

A detailed assessment of the human remains was made by Bishop Museum professional staff in consultation with representatives of the Santa Rosa Indian Community of the Santa Rosa Rancheria, California (Tachi Yokut Tribe). Correspondence in support of the assessment also was provided by the Picayune Rancheria of Chukchansi Indians of California. In addition, the Bishop Museum contacted the Table Mountain Rancheria of California.

History and Description of the Remains

In June of 1966, human remains representing, at minimum, two individuals were given to Dr. Alan Zeigler by Dr. Grover Krantz, while Dr. Zeigler was studying at the University of California, Berkeley. No information is provided as to the origins of the remains, other than a note in Zeigler's 1966 catalog listing the location as western North America. However, at the time, all of Dr. Zeigler's work focused around the Alameda County and Fresno areas in California. Presumably, these human remains were given to Zeigler to complement his research collection. Remains representing a minimum of two individuals were accompanied by a tag that reads, ''Sex? Imm. (2863 A.C. Zeigler) Coll? Rec'd from G. Krantz Western North America—No other data. (No meas's or wt.) Rec'd Jun-, 1966. Composite part, skeleton only, homo sapiens.'' No known individuals were identified. No associated funerary objects are present.

During his time at the University of California, Berkeley, much of Dr. Zeigler's collecting was focused on the Alameda, Fresno and Northern/Central California areas. In 1968, Dr. Zeigler published ''Quasi-agriculture in North-central California and its effect on aboriginal social structure'' in *Kroeber Anthropological Society Papers,* No. 38, pp. 52–67. Thus, the specimens given to Dr. Zeigler by Dr. Krantz probably were from these regions and were given to Dr. Zeigler in support of his studies. The geographic locations described lie within Yokut territories, which run from the San Pablo Bay shores to Tahachapi, and encompass Dr. Zeigler's work area, most notably in the East Bay area.

Determinations Made by the Bishop Museum

Officials of the Bishop Museum have determined that:

- Pursuant to 25 U.S.C. 3001(9), the human remains described in this notice represent the physical remains of two individuals of Native American ancestry.
- Pursuant to 25 U.S.C. 3001(2), there is a relationship of shared group identity that can be reasonably traced between the Native American human remains and the Santa Rosa Indian Community of the Santa Rosa Rancheria, California (Tachi Yokut Tribe).

Additional Requestors and Disposition

Representatives of any Indian tribe that believes itself to be culturally affiliated with the human remains should contact Betty Lou Kam, Vice-President, Cultural Resources, Bishop Museum, 1525 Bernice St., Honolulu, HI 96817, telephone (808) 848–4144, before March 28, 2012. Repatriation of the human remains to the Santa Rosa Indian Community of the Santa Rosa Rancheria, California (Tachi Yokut Tribe) may proceed after that date if no additional claimants come forward.

The Bishop Museum is responsible for notifying the Santa Rosa Indian Community of the Santa Rosa Rancheria, California (Tachi Yokut Tribe) that this notice has been published.

Dated: February 22, 2012.

Sherry Hutt,

Manager, National NAGPRA Program.

[FR Doc. 2012–4524 Filed 2–24–12; 8:45 am]

BILLING CODE 4312–50–P

DEPARTMENT OF THE INTERIOR

National Park Service

[2253–665]

Notice of Inventory Completion: History Colorado, Denver, CO

AGENCY: National Park Service, Interior.

ACTION: Notice.

SUMMARY: History Colorado (formerly the Colorado Historical Society) has completed an inventory of human remains, in consultation with the appropriate Indian tribes, and has determined that there is insufficient evidence to reasonably establish cultural affiliation between the human remains and present-day Indian tribes. Representatives of any Indian tribe that believes itself to be culturally affiliated with the human remains may contact History Colorado. Disposition of the human remains to the Indian tribes stated below may occur if no additional claimants come forward.

DATES: Representatives of any Indian tribe that believes it has a cultural affiliation with the human remains should contact History Colorado at the address below by March 28, 2012.

ADDRESSES: Sheila Goff, NAGPRA Liaison, History Colorado, 1200 Broadway, Denver, CO 80203, telephone (303) 866–4531.

SUPPLEMENTARY INFORMATION: Notice is here given in accordance with the Native American Graves Protection and Repatriation Act (NAGPRA), 25 U.S.C. 3003, of the completion of an inventory of human remains under control of History Colorado, Denver, CO. The exact locations from which the human remains were recovered are unknown; they were received through police seizures or private citizens in Arapaho, Boulder, Delta, Dolores, Jefferson, and Larimer Counties, CO.

This notice is published as part of the National Park Service's administrative responsibilities under NAGPRA, 25 U.S.C. 3003(d)(3) and 43 CFR 10.11(d). The determinations in this notice are the sole responsibility of the museum, institution, or Federal agency that has control of the Native American human remains. The National Park Service is not responsible for the determinations in this notice.

Consultation

In 2010 and 2011, a detailed assessment of the human remains was made by History Colorado professional staff in consultation with representatives of the Arapahoe Tribe of the Wind River Reservation, Wyoming; Cheyenne and Arapaho Tribes, Oklahoma (formerly the Cheyenne-Arapaho Tribes of Oklahoma); Fort Sill Apache Tribe of Oklahoma; Hopi Tribe of Arizona; Jicarilla Apache Nation, New Mexico; Mescalero Apache Tribe of the Mescalero Reservation, New Mexico; Navajo Nation, Arizona, New Mexico, & Utah; Ohkay Owingeh, New Mexico (formerly the Pueblo of San Juan); Pueblo of Acoma, New Mexico; Pueblo of Cochiti, New Mexico; Pueblo of Isleta, New Mexico; Pueblo of Jemez, New Mexico; Pueblo of Laguna, New Mexico; Pueblo of Nambe, New Mexico; Pueblo of Pojoaque, New Mexico; Pueblo of San Ildefonso, New Mexico; Pueblo of Santa Ana, New Mexico; Pueblo of Santa Clara, New Mexico; Pueblo of Tesuque, New Mexico; Southern Ute Indian Tribe of the Southern Ute Indian Reservation, Colorado; Ute Mountain Tribe of the Ute Mountain Reservation, Colorado, New Mexico & Utah; Ysleta Del Sur Pueblo of Texas; and the Zuni Tribe of the Zuni Reservation, New Mexico. The following tribes were invited to consult, but did not send representatives: Kewa Pueblo, New Mexico (formerly the Pueblo of Santo Domingo); Pueblo of Picuris, New Mexico; Pueblo of San Felipe, New Mexico; Pueblo of Sandia, New Mexico; Pueblo of Taos, New Mexico; and the Pueblo of Zia, New Mexico.

For one case, identified as Office of Archaeology and Historic Preservation (OAHP) Case Number 103, additional tribes were contacted during previous consultation in 2001 and 2006: Comanche Nation, Oklahoma; Kiowa Indian Tribe of Oklahoma; Northern Cheyenne Tribe of the Northern Cheyenne Reservation, Montana; Oglala Sioux Tribe of the Pine Ridge Reservation, South Dakota; Pawnee

Nation of Oklahoma; Rosebud Sioux Tribe of the Rosebud Indian Reservation, South Dakota; Three Affiliated Tribes of the Fort Berthold Reservation, North Dakota; and the Ute Indian Tribe of the Uintah & Ouray Reservation, Utah. The following tribes were invited to consult, but did not send representatives: Apache Tribe of Oklahoma; Shoshone Tribe of the Wind River Reservation, Wyoming; and the Wichita and Affiliated Tribes (Wichita, Keechi, Waco & Tawakonie), Oklahoma.

History and Description of the Remains

In 1994, human remains representing, at minimum, one individual were seized by the Wheat Ridge Police Department during a drug raid in Jefferson County, CO. The origin of the remains is unknown. The remains were turned over to the Jefferson County Coroner, who identified them as Native American. In February 1995, they were transferred to History Colorado. The remains are identified as OAHP Case Number 103. Additional osteological analysis disclosed cranial modification. No known individuals were identified. No associated funerary objects are present.

The remains were first reported in a Notice of Inventory Completion in the **Federal Register** (66 FR 10906–10909, Tuesday, February 20, 2001) and jointly affiliated with twelve Plains Tribes. Additional research changed the affiliation to culturally unidentifiable and this was reported in a Notice of Inventory Completion Correction in the **Federal Register** (76 FR 58037–58038, Monday, September 19, 2011).

At an unknown date prior to 2002, human remains representing, at minimum, three individuals were taken from Colorado State University in Larimer County, CO. The exact origins of these individuals are not known. The human remains were claimed as private property by the widow of Dr. Michael Charney, a former professor at the University, who died in 1998. The human remains were subsequently taken into custody by the Larimer County Sheriff's Office. Following litigation, in 2006, the human remains, which were initially identified as Native American, were transferred to History Colorado by court order to be repatriated in accordance with Colorado state burial law and NAGPRA. They are identified as OAHP Case Number 200. Subsequent osteological analysis by History Colorado determined that they exhibit cranial modification and are of Native American ancestry. No known individuals were identified. No associated funerary objects are present.

In May 2005, human remains representing, at minimum, two individuals were transferred to History Colorado by the Dolores County, CO, Sheriff's office. They are identified as OAHP Case Number 225. The remains had been stored in an evidence locker for at least five years. The exact origin of these individuals is not known. Osteological analysis arranged by the sheriff indicated that the remains exhibit cranial modification and are of Native American ancestry. Estimated antiquity is A.D. 700–1300. No known individuals were identified. No associated funerary objects are present.

In January 2006, human remains representing, at minimum, one individual were transferred to History Colorado by the Delta County Coroner's office. They are identified as OAHP Case Number 235. The remains had reportedly been in the possession of a Delta County family for years and allegedly were discovered when another family member was plowing his field in Cortez, CO. Osteological examination determined that the remains exhibit cranial modification and are of Native American ancestry. No known individuals were identified. No associated funerary objects are present.

In February 2007, human remains representing, at minimum, three individuals were recovered from the closet of a private citizen in Dolores County, CO. The exact origin of the remains is unknown. Osteological analysis determined that the remains exhibit cranial modification and are of Native American ancestry. The Dolores County Sheriff transferred the remains to History Colorado in March 2007. They are identified as OAHP Case Number 247. No known individuals were identified. No associated funerary objects are present. One ceramic cylinder, 1 polished stone, and 3 black-on-white potsherds were found with the remains in the closet, but it is not possible to determine if they are associated funerary objects and were part of the original burial context. These objects will be transferred with the individuals.

In March 2007, human remains representing, at minimum, one individual were seized from the home of a private citizen in Arapaho County, CO. The citizen stated that he had obtained them at a swap meet in Summit County, CO. The origin of the remains is unknown. The Arapaho County Coroner transferred the remains to History Colorado in March 2007. They are identified as OAHP Case Number 249. Osteological analysis determined the remains exhibit cranial modification and are of Native American ancestry. No known individuals were identified. No associated funerary objects are present.

In June 2007, human remains representing, at minimum, one individual were transferred to History Colorado by the Boulder County Coroner's Office. They are identified as OAHP Case Number 251. The remains had originally been taken to the Native American Rights Fund office in Boulder by a private citizen, who stated that she had found them in her deceased father's basement. They had been abandoned by one of his renters. She was advised to take them to the county coroner. The origin of the remains is unknown. Osteological examination determined that the remains exhibit cranial modification and are of Native American ancestry. No known individuals were identified. No associated funerary objects are present.

Determinations Made by History Colorado

Officials at History Colorado have determined that:

- Pursuant to 25 U.S.C. 3001(9)–(10), the human remains described above represent the physical remains of 12 individuals of Native American ancestry.
- Pursuant to 25 U.S.C. 3001(2), a relationship of shared group identity cannot be reasonably traced between the Native American human remains described above and any present-day Indian tribe.

History Colorado has determined that the human remains are ''culturally unidentifiable'' under NAGPRA, 43 CFR 10.9 (e)(6). In 2006, the History Colorado, in partnership with the Colorado Commission of Indian Affairs, Southern Ute Indian Tribe of the Southern Ute Reservation, Colorado, and the Ute Mountain Tribe of the Ute Mountain Reservation, Colorado, New Mexico & Utah conducted consultations with the tribes that have ancestral ties to the state of Colorado to develop the process for disposition of culturally unidentifiable Native American human remains and associated funerary objects originating from inadvertent discoveries on Colorado state and private lands. As a result of the consultation, a process was developed, titled *Process for Consultation, Transfer, and Reburial of Culturally Unidentifiable Native American Human Remains and Associated Funerary Objects Originating From Inadvertent Discoveries on Colorado State and Private Lands* (2008) (unpublished, on file with the Colorado Office of Archaeology and Historic Preservation). The presence of cranial modification suggested that these

individuals may have originated from the southwestern Colorado, but without additional evidence, it is not possible to make a cultural affiliation. The tribes consulted were those who expressed their wishes to be notified of discoveries in the Southwest Consultation Region as established by the *Process.*

The Native American Graves Protection and Repatriation Review Committee (Review Committee) is responsible for recommending specific actions for disposition of culturally unidentifiable human remains. On November 3–4, 2006, the *Process* was presented to the Review Committee for consideration. A January 8, 2007 letter on behalf of the Review Committee from the Designated Federal Officer transmitted the provisional authorization to proceed with the *Process* upon receipt of formal responses from the Jicarilla Apache Nation, New Mexico, and Kiowa Indian Tribe of Oklahoma, and subject to forthcoming conditions imposed by the Secretary of the Interior. On May 15–16, 2008, the responses from the Jicarilla Apache Nation, New Mexico, and Kiowa Indian Tribe of Oklahoma were submitted to the Review Committee. On September 23, 2008, the Assistant Secretary for Fish and Wildlife and Parks, as the designee for the Secretary of the Interior, transmitted the authorization for the disposition of culturally unidentifiable human remains according to the *Process* and NAGPRA, pending publication of a Notice of Inventory Completion in the **Federal Register**. This notice fulfills that requirement.

43 CFR 10.11 was promulgated March 15, 2010, providing a process for the disposition of culturally unidentifiable Native American human remains recovered from tribal or aboriginal lands as established by the final judgment of the Indian Claims Commission or U.S. Court of Claims, a treaty, Act of Congress, or Executive Order, or other authoritative governmental sources. There is no evidence indicating that the human remains reported in this notice originated from tribal or aboriginal lands, making them eligible for disposition under the *Process.*

Additional Requestors and Disposition

Representatives of any other Indian tribe that believes itself to be culturally affiliated with the human remains should contact Sheila Goff, NAGPRA Liaison, History Colorado, 1200 Broadway, Denver, CO 80203, telephone (303) 866–4531, before March 28, 2012. Transfer of control of the human remains to the Southern Ute Indian Tribe of the Southern Ute Reservation, Colorado, and the Ute Mountain Tribe of the Ute Mountain Reservation, Colorado, New Mexico & Utah may proceed after that date if no additional claimants come forward.

History Colorado is responsible for notifying the Apache Tribe of Oklahoma; Arapahoe Tribe of the Wind River Reservation, Wyoming; Cheyenne and Arapaho Tribes, Oklahoma; Cheyenne River Sioux Tribe of the Cheyenne River Reservation, South Dakota; Comanche Nation, Oklahoma; Crow Creek Sioux Tribe of the Crow Creek Reservation, South Dakota; Crow Tribe of Montana; Fort Sill Apache Tribe of Oklahoma; Hopi Tribe of Arizona; Jicarilla Apache Nation, New Mexico; Kewa Pueblo, New Mexico (formerly Pueblo of Santo Domingo); Kiowa Indian Tribe of Oklahoma; Mescalero Apache Tribe of the Mescalero Reservation, New Mexico; Navajo Nation, Arizona, New Mexico & Utah; Northern Cheyenne Tribe of the Northern Cheyenne Indian Reservation, Montana; Oglala Sioux Tribe of the Pine Ridge Reservation, South Dakota; Ohkay Owingeh, New Mexico (formerly the Pueblo of San Juan); Paiute Indian Tribe of Utah (Cedar Band of Paiutes, Kanosh Band of Paiutes, Koosharem Band of Paiutes, Indian Peaks Band of Paiutes, and Shivwits Band of Paiutes) (formerly Paiute Indian Tribe of Utah (Cedar City Band of Paiutes, Kanosh Band of Paiutes, Koosharem Band of Paiutes, Indian Peaks Band of Paiutes, and Shivwits Band of Paiutes)); Pawnee Nation of Oklahoma; Pueblo of Acoma, New Mexico; Pueblo of Cochiti, New Mexico; Pueblo of Isleta, New Mexico; Pueblo of Jemez, New Mexico; Pueblo of Laguna, New Mexico; Pueblo of Nambe, New Mexico; Pueblo of Picuris, New Mexico; Pueblo of Pojoaque, New Mexico; Pueblo of San Felipe, New Mexico; Pueblo of San Ildefonso, New Mexico; Pueblo of Sandia, New Mexico; Pueblo of Santa Ana, New Mexico; Pueblo of Santa Clara, New Mexico; Pueblo of Taos, New Mexico; Pueblo of Tesuque, New Mexico; Pueblo of Zia, New Mexico; Rosebud Sioux Tribe of the Rosebud Indian Reservation, South Dakota; San Juan Southern Paiute Tribe of Arizona; Shoshone-Bannock Tribes of the Fort Hall Reservation of Idaho; Shoshone Tribe of the Wind River Reservation, Wyoming; Southern Ute Indian Tribe of the Southern Ute Indian Reservation, Colorado; Standing Rock Sioux Tribe of North & South Dakota; Three Affiliated Tribes of the Fort Berthold Reservation, North Dakota; Ute Indian Tribe of the Uintah & Ouray Reservation, Utah; Ute Mountain Tribe of the Ute Mountain Reservation, Colorado, New Mexico & Utah; Wichita and Affiliated Tribes (Wichita, Keechi, Waco & Tawakoni), Oklahoma; Ysleta Del Sur Pueblo of Texas; and the Zuni Tribe of the Zuni Reservation, New Mexico, that this notice has been published.

Dated: February 22, 2012.

Sherry Hutt,

Manager, National NAGPRA Program.

[FR Doc. 2012–4531 Filed 2–24–12; 8:45 am]

BILLING CODE 4312–50–P

DEPARTMENT OF THE INTERIOR

National Park Service

[2253–665]

Notice of Inventory Completion: Grand Rapids Public Museum, Grand Rapids, MI

AGENCY: National Park Service, Interior.

ACTION: Notice.

SUMMARY: The Grand Rapids Public Museum has completed an inventory of human remains and associated funerary objects, in consultation with the appropriate Indian tribes, and has determined that there is a cultural affiliation between the human remains and associated funerary objects and present-day Indian tribes. Representatives of any Indian tribe that believes itself to be culturally affiliated with the human remains and associated funerary objects may contact the Grand Rapids Public Museum. Repatriation of the human remains and associated funerary objects to the Indian tribes stated below may occur if no additional claimants come forward.

DATES: Representatives of any Indian tribe that believes it has a cultural affiliation with the human remains and associated funerary object should contact the Grand Rapids Public Museum at the address below by March 28, 2012.

ADDRESSES: Marilyn Merdzinski, Director of Collections and Preservation, Grand Rapids Public Museum, 272 Pearl St. NW., Grand Rapids, MI 49504, telephone (616) 929–1801.

SUPPLEMENTARY INFORMATION: Notice is here given in accordance with the Native American Graves Protection and Repatriation Act (NAGPRA), 25 U.S.C. 3003, of the completion of an inventory of human remains and an associated funerary object in the possession of the Grand Rapids Public Museum, Grand Rapids, MI. The human remains and associated funerary object were removed from an unknown location.

This notice is published as part of the National Park Service's administrative responsibilities under NAGPRA, 25 U.S.C. 3003(d)(3). The determinations in this notice are the sole responsibility of the museum, institution or Federal agency that has control of the Native American human remains and associated funerary object. The National Park Service is not responsible for the determinations in this notice.

Consultation

A detailed assessment of the human remains was made by the Grand Rapids Public Museum professional staff in consultation with representatives of the Tohono O'odham Nation of Arizona on behalf of themselves and the Ak Chin Indian Community of the Maricopa (Ak Chin) Indian Reservation, Arizona; Gila River Indian Community of the Gila River Indian Reservation, Arizona; and the Salt River Pima-Maricopa Indian Community of the Salt River Reservation, Arizona. The Zuni Tribe of the Zuni Reservation, New Mexico, and the Hopi Tribe of Arizona indicated they were affiliated with the Hohokam culture but did not take part in consultation.

History and Description of the Remains

At an unknown date, a Hohokam red on buff swirl designed vessel containing the cremated remains of one individual was removed from an unknown location by an unknown individual. At an unknown date, G.S. Knapp acquired the Hohokam crematory vessel. In 1914, G.S. Knapp sold the vessel to the Grand Rapids Public Museum. No known individuals were identified. The one associated funerary object is a pottery vessel.

Although the Grand Rapids Public Museum's records state that the vessel is from ''Flats of Doe Run, MO'' and is from a mound builder culture, Missouri is not an area traditionally occupied by the Hohokam, and the vessel type is indicative of an Arizona origin. On November 12, 2010, the vessel was identified by Peter Steere of the Tohono O'odham Nation of Arizona as being an Early-Middle Rincon Phase Red-on-Brown design from the Tucson Basin, ca. A.D. 1100. In 1990, representatives of the Ak Chin Indian Community of the Maricopa (Ak Chin) Indian Reservation, Arizona; Gila River Indian Community of the Gila River Indian Reservation, Arizona; Salt River Pima-Maricopa Indian Community of the Salt River Reservation, Arizona; and Tohono O'odham Nation of Arizona issued a joint policy statement claiming ancestral ties to the Hohokam cultural traditions.

Determinations Made by the Grand Rapids Public Museum

Officials of the Grand Rapids Public Museum have determined that:

- Pursuant to 25 U.S.C. 3001(9), the human remains described in this notice represent the physical remains of one individual of Native American ancestry.
- Pursuant to 25 U.S.C. 3001(3)(A), the one object described above is reasonably believed to have been placed with or near individual human remains at the time of death or later as part of the death rite or ceremony.
- Pursuant to 25 U.S.C. 3001(2), there is a relationship of shared group identity that can be reasonably traced between the Native American human remains and associated funerary object and the Tohono O'odham Nation of Arizona; Ak Chin Indian Community of the Maricopa (Ak Chin) Indian Reservation, Arizona; Gila River Indian Community of the Gila River Indian Reservation, Arizona; and the Salt River Pima-Maricopa Indian Community of the Salt River Reservation, Arizona.

Additional Requestors and Disposition

Representatives of any Indian tribe that believes itself to be culturally affiliated with the human remains and associated funerary objects should contact Marilyn Merdzinski, Director of Collections and Preservation, Grand Rapids Public Museum, 272 Pearl St. NW., Grand Rapids, MI 49504, telephone (616) 929–1801, March 28, 2012. Repatriation of the human remains and associated funerary objects to the Tohono O'odham Nation of Arizona may proceed after that date if no additional claimants come forward.

The Grand Rapids Public Museum is responsible for notifying the Ak Chin Indian Community of the Maricopa (Ak Chin) Indian Reservation, Arizona; Gila River Indian Community of the Gila River Indian Reservation, Arizona; Hopi Tribe of Arizona; Salt River Pima-Maricopa Indian Community of the Salt River Reservation, Arizona; Tohono O'odham Nation of Arizona; and the Zuni Tribe of the Zuni Reservation, New Mexico, that this notice has been published.

Dated: February 22, 2012.

Sherry Hutt,

Manager, National NAGPRA Program.

[FR Doc. 2012–4515 Filed 2–24–12; 8:45 am]

BILLING CODE 4312–50–P

DEPARTMENT OF THE INTERIOR

National Park Service

[2253–663]

Notice of Inventory Completion: U.S. Department of Defense, Army Corps of Engineers, Walla Walla District, Walla Walla, WA, and the University of Oregon Museum of Natural and Cultural History, Eugene, OR

AGENCY: National Park Service, Interior.

ACTION: Notice.

SUMMARY: The United States Department of Defense, Army Corps of Engineers, Walla Walla District, and the University of Oregon Museum of Natural and Cultural History have completed an inventory of human remains in consultation with the appropriate Indian tribes, and have determined that there is a cultural affiliation between the human remains and present-day Indian tribes. Repatriation of the human remains to the Indian tribes stated below may occur if no additional claimants come forward.

DATES: Representatives of any Indian tribe that believes it has a cultural affiliation with the human remains should contact the U.S. Department of Defense, Army Corps of Engineers, Walla Walla District at the address below by March 28, 2012.

ADDRESSES: LTC David Caldwell, U.S. Department of Defense, Army Corps of Engineers, Walla Walla District, 201 North Third Ave., Walla Walla, WA 99362, telephone (509) 527–7700.

SUPPLEMENTARY INFORMATION: Notice is here given in accordance with the Native American Graves Protection and Repatriation Act (NAGPRA), 25 U.S.C. 3003, of the completion of an inventory of human remains under the control of the U.S. Department of Defense, Army Corps of Engineers, Walla Walla District, Walla Walla, WA, and in the physical custody of the University of Oregon Museum of Natural and Cultural History (UO–MNCH), Eugene, OR. The human remains were removed from 45BN3, a village site located on Berrian's Island, in Benton County, WA.

This notice is published as part of the National Park Service's administrative responsibilities under NAGPRA, 25 U.S.C. 3003(d)(3). The determinations in this notice are the sole responsibility of the museum, institution or Federal agency that has control of the Native American human remains. The National Park Service is not responsible for the determinations in this notice.

Consultation

A detailed assessment of the human remains was made by U.S. Department of Defense, Army Corps of Engineers, and UO–MNCH professional staff in consultation with representatives of the Confederated Tribes and Bands of the Yakama Nation, Washington; Confederated Tribes of the Colville Reservation, Washington; Confederated Tribes of the Umatilla Indian Reservation, Oregon; Confederated Tribes of the Warm Springs Indian Reservation of Oregon; Nez Perce Tribe, Idaho; and the Wanapum Band, a non-Federally recognized Indian Group.

History and Description of the Remains

In 1948 and 1949, human remains representing, at minimum, seven individuals were removed from 45BN3, a pre-contact protohistoric village site located on the south side of Berrian's Island, in Benton County, WA. Site 45BN3 is located within the McNary Lock and Dam Project on the Columbia River. The McNary Lock and Dam Project is managed by the U.S. Department of Defense, Army Corps of Engineers, Walla Walla District, who initiated land acquisition processes for the Project in 1947.

In 1947, the Smithsonian Institution's River Basin Survey Project (SRBS) surveyed and surface collected material cultural remains from site 45BN3. In 1948, the SRBS excavated the site and removed 50 burials and 1,650 artifacts. Many of the burials were recovered in situ and were bounded by wood. Originally identified as cists, this wood was later determined to be the burnt remains of conical wood stacks that had been erected over the burials. The associated funerary objects included copper, iron, glass trade beads, shell ornaments and stone implements. Following completion of field investigations, the collections were transported to the SRBS laboratory at the University of Oregon. In 1949, the SRBS returned to site 45BN3 and salvaged four additional burials that had been looted by amateur collectors.

The collections recovered through the SRBS investigations were transferred to three separate repositories: the Smithsonian Institution; the University of Washington (UW) Burke Museum, Seattle, WA; and UO–MNCH, Eugene, OR. The portions of the collections held at UO–MNCH were accessioned between 1950–1952, and include materials from Burials 4–5, 7–9, 11–15, 19, 22, 24–26, 32, 34, 36–37, 39, 41, 43, 45–46, 48–49, and 51–54. Materials from the 1948 and 1949 SRBS collections at UO–MNCH were inventoried in 1985 and again in 1996. The remains of seven individuals (accession #100KT/MP) were documented through the inventory. Due to an absence of associated documentation, these seven individuals cannot be connected to specific burials. The remains are those of an adult male, an adult female, two adults of indeterminate gender, two children and another individual of indeterminate age and gender. No known individuals were identified. No associated funerary objects are present.

The estimated date range of the other burials from site 45BN3 is 1750–1811, based upon the presence of Colonial uniform buttons whose earliest manufacture date is c.1750 and the absence of firearms, whose use by local tribes began c.1811. Further evidence supporting the date of these burials is the volume of trade goods observed in both the burials and in the living area. Site 45BN3 was also reported to have contained evidence of contemporaneous mat lodge pits. Distinctive morphological traits, burial methods and associated funerary objects indicate Native American ancestry and funerary traditions reflective of Native groups of the Columbia Plateau.

Determinations Made by the U.S. Department of Defense, Army Corps of Engineers, Walla Walla District

Officials of the U.S. Department of Defense, Army Corps of Engineers, Walla Walla District, have determined that:

- Pursuant to 25 U.S.C. 3001(9)–(10), the human remains described above represent the physical remains of seven individuals of Native American ancestry.
- Pursuant to 25 U.S.C. 3001(2), there is a relationship of shared group identity that can be reasonably traced between the Native American human remains and the Confederated Tribes and Bands of the Yakama Nation, Washington; Confederated Tribes of the Colville Reservation, Washington; Confederated Tribes of the Umatilla Indian Reservation, Oregon; Confederated Tribes of the Warm Springs Indian Reservation of Oregon; and the Nez Perce Tribe, Idaho (hereafter referred to as ''The Tribes''). Additionally, a cultural relationship is determined to exist between the sites and collections and the Wanapum Band, a non-Federally recognized Indian Group.

Additional Requestors and Disposition

Representatives of any other Indian tribe that believes itself to be culturally affiliated with the human remains should contact LTC David Caldwell, U.S. Department of Defense, Army Corps of Engineers, Walla Walla District, 201 North Third Ave., Walla Walla, WA 99362, telephone (509) 527–7700, before March 28, 2012. Repatriation of the human remains to The Tribes and (if joined) the Wanapum Band, a non-Federally recognized Indian Group, may proceed after that date if no additional claimants come forward.

The U.S. Department of Defense, Army Corps of Engineers, Walla Walla District, is responsible for notifying The Tribes and the Wanapum Band, a non-Federally recognized Indian Group, that this notice has been published.

Dated: February 22, 2012.

Sherry Hutt,

Manager, National NAGPRA Program.

[FR Doc. 2012–4514 Filed 2–24–12; 8:45 am]

BILLING CODE 4312–50–P

DEPARTMENT OF THE INTERIOR

National Park Service

[2253–665]

Notice of Inventory Completion: U.S. Department of the Interior, Bureau of Indian Affairs, Washington, DC, and the Arizona State Museum, University of Arizona, Tucson, AZ; Correction

AGENCY: National Park Service, Interior.

ACTION: Notice; correction.

Notice is here given in accordance with the Native American Graves Protection and Repatriation Act (NAGPRA), 25 U.S.C. 3003, of the completion of an inventory of human remains and associated funerary objects under the control of the U.S. Department of the Interior, Bureau of Indian Affairs, Washington, DC, and in the physical custody of the Arizona State Museum, University of Arizona, Tucson, AZ. The human remains and associated funerary objects were removed from sites within the boundaries of the Fort Apache Indian Reservation, Gila and Navajo Counties, AZ.

This notice is published as part of the National Park Service's administrative responsibilities under NAGPRA, 25 U.S.C. 3003(d)(3). The determinations in this notice are the sole responsibility of the museum, institution or Federal agency that has control of the Native American human remains and associated funerary objects. The National Park Service is not responsible for the determinations in this notice.

This notice corrects the minimum number of individuals and the number

of associated funerary objects in a Notice of Inventory Completion previously published in the **Federal Register** (76 FR 14064–14067, March 15, 2011). During final preparations for reburial, additional fragmentary human remains were discovered from three of the ten sites listed in the notice. As a result, the total number of individuals is corrected from 241 to 261. Also, additional associated funerary objects from one of the ten sites listed in the previous notice were discovered, and the number of associated funerary objects from another site was revised. Therefore, the total number of associated funerary objects is corrected from 74 to 103.

In the **Federal Register** notice (76 FR 14064–14067, March 15, 2011), paragraph four is corrected by substituting the following paragraph:

In 1979, fragmentary human remains representing, at minimum, 20 individuals were removed from the Hilltop Ruin Site, AZ P:14:12(ASM), Navajo County, AZ, during a legally authorized survey conducted by the University of Arizona Archaeological Field School, under the direction of Madeleine Hinkes. A report prepared by Hinkes describes the presence of at least 45 unauthorized excavation pits at this site. The human remains were collected from these pits or adjacent backdirt piles. There is no record in Arizona State Museum files regarding the accession of these human remains; however, the collection likely entered the museum in the same year as other collections from the summer field school. No known individuals were identified. No associated funerary objects are present.

Paragraph number 7 is corrected by substituting the following paragraph:

There is no record in Arizona State Museum files regarding the accession of these human remains; however, the collection likely entered the museum in the same year as other collections from the summer field school. No known individuals were identified. The 36 associated funerary objects include: 1 stone axe, 1 bone bead, 2 carved stone objects, 1 shell pendant, 1 pierced shell, 3 projectile points, 2 ceramic vessels, 1 rim sherd, 1 shell bead, 8 shell fragments, 7 ceramic sherds, 1 shell tinkler, 3 turquoise fragments, 2 worked lithic artifacts, 1 worked shell artifact, and 1 worked shell fragment.

Paragraph number 11 is corrected by substituting the following paragraph:

Between 1976 and 1989, legally authorized excavations were conducted at the site of Chiwodistás, AZ P:14:24(ASM), Navajo County, AZ, by the University of Arizona Archaeological Field School, under the direction of J. Jefferson Reid. No human burials were intentionally excavated during this project. Archeological collections from the site were brought to the museum at the end of each field season, but no accession number was assigned to them. Between 2009 and 2011, Arizona State Museum staff found fragmentary human remains representing, at minimum, 31 individuals intermingled with animal bone collections from this site. The animal bones are not considered to be associated funerary objects. No known individuals were identified. No associated funerary objects are present.

Paragraph number 19 is corrected by substituting the following paragraph:

In 1929, human remains representing six individuals were removed from Canyon Creek Ruin, AZ C:2:8(GP)/AZ V:2:1(ASM), Gila County, AZ during legally authorized excavations conducted by the Gila Pueblo Foundation, under the direction of Emil Haury. In 1950, the Gila Pueblo Foundation closed and the collections were transferred to the Arizona State Museum. No known individuals were identified. The 64 associated funerary objects include: 1 yucca fiber apron, 1 basketry bowl, 2 cradleboards, 1 basketry tump strap, 3 ceramic bowls, 1 gourd bottle, 1 gourd dipper, 1 gourd rind, 2 gourd scoops, 1 hair bundle, 1 cotton manta, 1 basketry mat, 5 basketry mat fragments, 1 piece of plant fiber, 1 plant fiber blanket, 1 yucca fiber quid, 1 lot of cotton roving, 2 sandals, 1 wood spindle, 28 textile fragments, 3 textile wrappings, 4 wood lattice fragments, and 1 lot of yucca fiber yarn.

Paragraph number 24 is corrected by substituting the following paragraph:

In 1969, human remains representing, at minimum, five individuals were removed from site AZ V:2:12(ASM), Gila County, AZ, during legally authorized salvage activities conducted by the University of Arizona Archaeological Field School, under the direction of David Tuggle. The site had been extensively vandalized and the objective of the University of Arizona archeologists was to recover human remains that had been disturbed. Archeological collections from the site were brought to the museum at the end of the field season, but no accession numbers were assigned. No known individuals were identified. No associated funerary objects are present.

Paragraph number 29 is corrected by substituting the following paragraph:

Officials of the Bureau of Indian Affairs and Arizona State Museum have determined that:

- Pursuant to 25 U.S.C. 3001(9), the human remains described above represent the physical remains of 261 individuals of Native American ancestry.
- Pursuant to 25 U.S.C. 3001(3)(A), the 103 objects described above are reasonably believed to have been placed with or near individual human remains at the time of death or later as part of the death rite or ceremony.
- Pursuant to 25 U.S.C. 3001(2), there is a relationship of shared group identity that can be reasonably traced between the Native American human remains and associated funerary objects and the Hopi Tribe of Arizona and Zuni Tribe of the Zuni Reservation, New Mexico.

Representatives of any other Indian tribe that believes itself to be culturally affiliated with the human remains and associated funerary objects should contact John McClelland, NAGPRA Coordinator, Arizona State Museum, University of Arizona, Tucson, AZ 85721, telephone (520) 626–2950, before March 28, 2012. Repatriation of the human remains and associated funerary objects to the Hopi Tribe of Arizona and Zuni Tribe of the Zuni Reservation, New Mexico, may proceed after that date if no additional claimants come forward.

The Arizona State Museum is responsible for notifying the Hopi Tribe of Arizona; White Mountain Apache Tribe of the Fort Apache Indian Reservation, Arizona; and the Zuni Tribe of the Zuni Reservation, New Mexico that this notice has been published.

Dated: February 22, 2012.

Sherry Hutt,

Manager, National NAGPRA Program.

[FR Doc. 2012–4509 Filed 2–24–12; 8:45 am]

BILLING CODE 4312–50–P

DEPARTMENT OF THE INTERIOR

National Park Service

[2253–665]

Notice of Inventory Completion: U.S. Department of the Interior, Bureau of Indian Affairs, Washington, DC, and the Arizona State Museum, University of Arizona, Tucson, AZ

AGENCY: National Park Service, Interior.

ACTION: Notice.

SUMMARY: The United States Department of Interior, Bureau of Indian Affairs, and the Arizona State Museum, University of Arizona, have completed an inventory of human remains and associated funerary objects, in

consultation with the appropriate Indian tribes, and have determined that there is a cultural affiliation between the human remains and associated funerary objects and present-day Indian tribes. Representatives of any Indian tribe that believes itself to be culturally affiliated with the human remains and associated funerary objects may contact the Arizona State Museum, University of Arizona. Repatriation of the human remains and associated funerary objects to the Indian tribes stated below may occur if no additional claimants come forward.

DATES: Representatives of any Indian tribe that believes it has a cultural affiliation with the human remains and associated funerary objects should contact the Arizona State Museum, University of Arizona, at the address below by March 28, 2012.

ADDRESSES: John McClelland, NAGPRA Coordinator, P.O. Box 210026, Arizona State Museum, University of Arizona, Tucson, AZ 85721, telephone (520) 626–2950.

SUPPLEMENTARY INFORMATION: Notice is here given in accordance with the Native American Graves Protection and Repatriation Act (NAGPRA), 25 U.S.C. 3003, of the completion of an inventory of human remains and associated funerary objects under the control of the U.S. Department of the Interior, Bureau of Indian Affairs, Washington, DC, and in the physical custody of the Arizona State Museum, University of Arizona, Tucson, AZ (ASM). The human remains and associated funerary objects were removed from a location within the boundaries of the Fort Apache Indian Reservation, Navajo County, AZ.

This notice is published as part of the National Park Service's administrative responsibilities under NAGPRA, 25 U.S.C. 3003(d)(3). The determinations in this notice are the sole responsibility of the museum, institution or Federal agency that has control of the Native American human remains and associated funerary objects. The National Park Service is not responsible for the determinations in this notice.

Consultation

A detailed assessment of the human remains was made by the ASM professional staff in consultation with representatives of the Hopi Tribe of Arizona; White Mountain Apache Tribe of the Fort Apache Reservation, Arizona; and the Zuni Tribe of the Zuni Reservation, New Mexico.

History and Description of the Remains

In the years 1963 through 1977, human remains representing, at minimum, 1,148 individuals were removed from the Grasshopper Pueblo, site AZ P:14:1 (ASM), in Navajo County, AZ, as a result of legally authorized excavations conducted by the University of Arizona Archaeological Field School. Archaeological collections from the site were brought to the museum at the end of each field season. No known individuals were identified. The 1,703 associated funerary objects are 4 animal bones, 3 animal claws, 7 antler artifacts, 1 antler fragment, 9 bone artifacts, 32 bone awls, 3 bone awl fragments, 4 bone beads, 2 bone hairpins, 2 bone needles, 1 bone needle fragment, 3 bone ornaments, 14 bone rings, 1 bone spatula, 1 bone wand, 556 ceramic bowls, 39 ceramic bowl fragments, 2 ceramic canteens, 1 ceramic disk, 1 ceramic drill, 1 ceramic figurine fragment, 179 ceramic jars, 12 ceramic jar fragments, 1 ceramic pendant, 8 ceramic pitchers, 1 ceramic pitcher fragment, 1 ceramic plate, 4 ceramic scoops, 33 ceramic sherds, 3 ceramic sherd artifacts, 9 pieces of chipped stone, 1 chipped stone core, 2 pieces of chipped stone debris, 44 chipped stone flakes, 1 lot of clay, 1 clay jar, 1 clay lid fragment, 1 coral fossil, 1 cotton ball, 5 fossils, 1 hammerstone, 1 handstone, 9 manos, 4 mano fragments, 16 lots of mineral, 2 pieces of mortar, 12 polishing stones, 28 quartz crystals, 7 shells, 5 shell artifacts, 1 shell artifact fragment, 129 shell beads, 11 shell bracelets, 2 shell bracelet fragments, 1 shell necklace, 1 shell ornament, 21 shell pendants, 3 shell pendant fragments, 4 shell rings, 21 shell tinklers, 1 shell tinkler fragment, 2 soil impressions, 1 stone, 10 stone artifacts, 1 stone awl, 1 stone axe, 1 stone ball, 110 stone beads, 1 stone bowl, 1 stone concretion, 1 stone cylinder, 1 stone disk, 5 stone figurines, 1 stone handstone, 3 stone knives, 2 stone pebbles, 7 stone pendants, 209 stone projectile points, 3 stone projectile point fragments, 5 stone shaft smoothers, 1 stone shaft straightener, 1 stone slab, 1 textile cord, 5 turquoise beads, 42 turquoise pendants, 12 turquoise tesserae, and 1 wood mat fragment.

The Grasshopper Pueblo site is a large village site containing approximately 500 rooms in more than a dozen stone room blocks arranged around three main plazas. The site has been dated from A.D. 1275–1400, based on tree ring dates, architectural forms, building technology and ceramic styles. These characteristics, the mortuary pattern and other items of material culture are consistent with the archeologically-described Upland Mogollon or prehistoric Western Pueblo tradition.

A detailed discussion of the basis for cultural affiliation of archeological sites in the region where the above site is located may be found in ''Cultural Affiliation Assessment of White Mountain Apache Tribal Lands (Fort Apache Indian Reservation),'' by John R. Welch and T.J. Ferguson (2005). To summarize, archeologists have used the terms Upland Mogollon or prehistoric Western Pueblo to define the archeological complexes represented by the site listed above. Material culture characteristics of these traditions include a temporal progression from earlier pit houses to later masonry pueblos, villages organized in room blocks of contiguous dwellings associated with plazas, rectangular kivas, polished and paint-decorated ceramics, unpainted corrugated ceramics, inhumation burials, cradleboard cranial deformation, grooved stone axes, and bone artifacts. The combination of the material culture attributes and a subsistence pattern, which included hunting and gathering augmented by maize agriculture, helps to identify an earlier group. Archeologists have also remarked that there are strong similarities between this earlier group and present-day tribes included in the Western Pueblo ethnographic group, especially the Hopi Tribe of Arizona and the Zuni Tribe of the Zuni Reservation, New Mexico. The similarities in ceramic traditions, burial practices, architectural forms and settlement patterns have led archeologists to believe that the prehistoric inhabitants of the Mogollon Rim region migrated north and west to the Hopi mesas, and north and east to the Zuni River Valley. Certain objects found in Upland Mogollon archeological sites have been found to have strong resemblances to ritual paraphernalia that are used in continuing religious practices by the Hopi and Zuni. Some petroglyphs on the Fort Apache Indian Reservation have also persuaded archeologists of continuities between the earlier identified group and current-day Western Pueblo people. Biological information from the site of Grasshopper Pueblo supports the view that the prehistoric occupants of the Upland Mogollon region had migrated from various locations to the north and west of the region.

Hopi and Zuni oral traditions parallel the archeological evidence for migration. Migration figures prominently in Hopi oral tradition, which refers to the ancient sites, pottery, stone tools, petroglyphs and other artifacts left behind by the

ancestors as ''Hopi Footprints.'' This migration history is complex and detailed, and includes traditions relating specific clans to the Mogollon region. Hopi cultural advisors have also identified medicinal and culinary plants at archeological sites in the region. Their knowledge about these plants was passed down to them from the ancestors who inhabited these ancient sites. Migration is also an important attribute of Zuni oral tradition, and includes accounts of Zuni ancestors passing through the Upland Mogollon region. The ancient villages mark the routes of these migrations. Zuni cultural advisors remark that the ancient sites were not abandoned. People returned to these places from time to time, either to reoccupy them or for the purpose of religious pilgrimages—a practice that has continued to the present day. Archeologists have found ceramic evidence at shrines in the Upland Mogollon region that confirms these reports. Zuni cultural advisors have names for plants endemic to the Mogollon region that do not grow on the Zuni Reservation. They also have knowledge about traditional medicinal and ceremonial uses for these resources, which has been passed down to them from their ancestors. Furthermore, Hopi and Zuni cultural advisors have recognized that their ancestors may have been co-resident at some of the sites in this region during their ancestral migrations.

There are differing points of view regarding the possible presence of Apache people in the Upland Mogollon region during the time that Grasshopper Pueblo was occupied. Some Apache traditions describe interactions with Ancestral Pueblo people during this time, but according to these stories, Puebloan people and Apache people were regarded as having separate identities. The White Mountain Apache Tribe of the Fort Apache Reservation, Arizona, does not claim cultural affiliation with the human remains and associated funerary objects from this site. As reported by Welch and Ferguson (2005), consultations between the White Mountain Apache Tribe of the Fort Apache Reservation, Arizona, and the Navajo Nation, Arizona, New Mexico & Utah; Pueblo of Acoma, New Mexico; and Pueblo of Laguna, New Mexico, have indicated that none of these tribes wish to pursue claims of affiliation with sites on White Mountain Apache Tribal lands. Finally, the White Mountain Apache Tribe of the Fort Apache Reservation, Arizona, supports the repatriation of human remains and associated funerary objects from this site and is ready to assist the Hopi Tribe of Arizona and Zuni Tribe of the Zuni Reservation, New Mexico, in the reburial.

Determinations Made by the U.S. Department of the Interior, Bureau of Indian Affairs, Washington, DC, and the Arizona State Museum, University of Arizona, Tucson, AZ

Officials of the Bureau of Indian Affairs and the Arizona State Museum have determined that:

- Pursuant to 25 U.S.C. 3001(9), the human remains described in this notice represent the physical remains of 1,148 individuals of Native American ancestry.
- Pursuant to 25 U.S.C. 3001(3)(A), the 1,703 objects described above are reasonably believed to have been placed with or near individual human remains at the time of death or later as part of the death rite or ceremony.
- Pursuant to 25 U.S.C. 3001(2), there is a relationship of shared group identity that can be reasonably traced between the Native American human remains and associated funerary objects and the Hopi Tribe of Arizona and Zuni Tribe of the Zuni Reservation, New Mexico.

Additional Requestors and Disposition

Representatives of any other Indian tribe that believes itself to be culturally affiliated with the human remains and associated funerary objects should contact John McClelland, NAGPRA Coordinator, Arizona State Museum, University of Arizona, Tucson, AZ 85721, telephone (520) 626–2950, before March 28, 2012. Repatriation of the human remains and associated funerary objects to the Hopi Tribe of Arizona and Zuni Tribe of the Zuni Reservation, New Mexico, may proceed after that date if no additional claimants come forward.

The Arizona State Museum is responsible for notifying the Hopi Tribe of Arizona; White Mountain Apache Tribe of the Fort Apache Reservation, Arizona; and the Zuni Tribe of the Zuni Reservation, New Mexico, that this notice has been published.

Dated: February 22, 2012.

Sherry Hutt,

Manager, National NAGPRA Program.

[FR Doc. 2012–4510 Filed 2–24–12; 8:45 am]

BILLING CODE 4312–50–P

DEPARTMENT OF THE INTERIOR

National Park Service

[2253–665]

Notice of Inventory Completion: U.S. Department of the Interior, Bureau of Indian Affairs, Washington, DC, and the Arizona State Museum, University of Arizona, Tucson, AZ

AGENCY: National Park Service, Interior.

ACTION: Notice.

SUMMARY: The United States Department of the Interior, Bureau of Indian Affairs, and the Arizona State Museum, University of Arizona, have completed an inventory of human remains, in consultation with the appropriate Indian tribes, and have determined that there is a cultural affiliation between the human remains and present-day Indian tribes. Representatives of any Indian tribe that believes itself to be culturally affiliated with the human remains may contact the Arizona State Museum, University of Arizona. Repatriation of the human remains to the Indian tribes stated below may occur if no additional claimants come forward.

DATES: Representatives of any Indian tribe that believes it has a cultural affiliation with the human remains should contact the Arizona State Museum, University of Arizona, at the address below by March 28, 2012.

ADDRESSES: John McClelland, NAGPRA Coordinator, P.O. Box 210026, Arizona State Museum, University of Arizona, Tucson, AZ 85721, telephone (520) 626–2950.

SUPPLEMENTARY INFORMATION: Notice is hereby given in accordance with the Native American Graves Protection and Repatriation Act (NAGPRA), 25 U.S.C. 3003, of the completion of an inventory of human remains under the control of the U.S. Department of the Interior, Bureau of Indian Affairs, Washington, DC, and in the physical custody of the Arizona State Museum, University of Arizona, Tucson, AZ (ASM). The human remains were removed from sites within the boundaries of the Fort Apache Indian Reservation, Gila and Navajo Counties, AZ.

This notice is published as part of the National Park Service's administrative responsibilities under NAGPRA, 25 U.S.C. 3003(d)(3). The determinations in this notice are the sole responsibility of the museum, institution or Federal agency that has control of the Native American human remains. The National Park Service is not responsible for the determinations in this notice.

Consultation

A detailed assessment of the human remains was made by the ASM professional staff in consultation with representatives of the Hopi Tribe of Arizona; White Mountain Apache Tribe of the Fort Apache Indian Reservation, Arizona; and the Zuni Tribe of the Zuni Reservation, New Mexico.

History and Description of the Remains

In 1979, legally authorized test excavations were conducted at site AZ P:14:264 (ASM), Navajo County, AZ, by the University of Arizona Archaeological Field School, under the direction of Brian Byrd. No human burials were intentionally excavated during this project. Archeological collections from the site were brought to the museum at the end of the field season, but no accession number was assigned to them. In 2011, ASM staff found fragmentary human remains representing, at minimum, one individual intermingled with animal bone collections from this site. The animal bones are not considered to be associated funerary objects. No known individuals were identified. No associated funerary objects are present.

Site AZ P:14:264 is a sherd and lithic scatter located near the test excavation sites. Based on the ceramic assemblage, the site has been dated to the period A.D. 1000–1400. The ceramic forms are consistent with the archeologically-described Upland Mogollon or prehistoric Western Pueblo traditions.

In 1979, legally authorized test excavations were conducted at site AZ P:14:296 (ASM), Navajo County, AZ, by the University of Arizona Archaeological Field School, under the direction of Brian Byrd. No human burials were intentionally excavated during this project. Archeological collections from the site were brought to the museum at the end of the field season, but no accession number was assigned to them. In 2011, ASM staff found fragmentary human remains representing, at minimum, one individual intermingled with animal bone collections from this site. The animal bones are not considered to be associated funerary objects. No known individuals were identified. No associated funerary objects are present.

Site AZ P:14:296 consists of a sherd and lithic scatter. In addition, the remains of at least one pit house were located near the test excavation sites. Based on the ceramic assemblage and architectural forms, the site has been dated to A.D. 700–900. The ceramic and architectural forms are consistent with the archeologically-described Upland Mogollon or prehistoric Western Pueblo traditions.

In 1979, legally authorized test excavations were conducted at site AZ P:14:297 (ASM), Navajo County, AZ, by the University of Arizona Archaeological Field School, under the direction of Brian Byrd. No human burials were intentionally excavated during this project. Archeological collections from the site were brought to the museum at the end of the field season, but no accession number was assigned to them. In 2011, ASM staff found fragmentary human remains representing, at minimum, two individuals intermingled with animal bone collections from this site. The animal bones are not considered to be associated funerary objects. No known individuals were identified. No associated funerary objects are present.

Site AZ P:14:297 is a sherd and lithic scatter. In addition, the remains of at least one pit house were located near the test excavation sites. Based on a tree ring date, the site has been dated to the period A.D. 800–1000. The ceramic and architectural forms are consistent with the archeologically-described Upland Mogollon or prehistoric Western Pueblo traditions.

In 1979, legally authorized test excavations were conducted at site AZ V:2:72 (ASM), Gila County, AZ, by the University of Arizona Archaeological Field School, under the direction of Brian Byrd. No human burials were intentionally excavated during this project. Archeological collections from the site were brought to the museum at the end of the field season, but no accession number was assigned to them. In 2011, ASM staff found fragmentary human remains representing, at minimum, one individual intermingled with animal bone collections from this site. The animal bones are not considered to be associated funerary objects. No known individuals were identified. No associated funerary objects are present.

Site AZ V:2:72 is a rock shelter located in the same vicinity as Hole Canyon Pueblo, site AZ V:2:5. Based on the ceramic assemblage, the site has been dated to A.D. 1000–1200. The ceramic forms are consistent with the archeologically-described Upland Mogollon or prehistoric Western Pueblo traditions.

A detailed discussion of the basis for cultural affiliation of archeological sites in the region where the above sites are located may be found in ''Cultural Affiliation Assessment of White Mountain Apache Tribal Lands (Fort Apache Indian Reservation),'' by John R. Welch and T.J. Ferguson (2005). To summarize, archeologists have used the terms Upland Mogollon or prehistoric Western Pueblo to define the archeological complexes represented by the sites listed above. Material culture characteristics of these traditions include a temporal progression from earlier pit houses to later masonry pueblos, villages organized in room blocks of contiguous dwellings associated with plazas, rectangular kivas, polished and paint-decorated ceramics, unpainted corrugated ceramics, inhumation burials, cradleboard cranial deformation, grooved stone axes, and bone artifacts. The combination of the material culture attributes and a subsistence pattern, which included hunting and gathering augmented by maize agriculture, helps to identify an earlier group. Archeologists have also remarked that there are strong similarities between this earlier group and present-day tribes included in the Western Pueblo ethnographic group, especially the Hopi Tribe of Arizona and the Zuni Tribe of the Zuni Reservation, New Mexico. The similarities in ceramic traditions, burial practices, architectural forms and settlement patterns have led archeologists to believe that the prehistoric inhabitants of the Mogollon Rim region migrated north and west to the Hopi mesas, and north and east to the Zuni River Valley. Certain objects found in Upland Mogollon archeological sites have been found to have strong resemblances to ritual paraphernalia that are used in continuing religious practices by the Hopi and Zuni. Some petroglyphs on the Fort Apache Indian Reservation have also persuaded archeologists of continuities between the earlier identified group and current-day Western Pueblo people. Biological information from the site of Grasshopper Pueblo, which is located in close proximity to the sites listed above, supports the view that the prehistoric occupants of the Upland Mogollon region had migrated from various locations to the north and west of the region.

Hopi and Zuni oral traditions parallel the archeological evidence for migration. Migration figures prominently in Hopi oral tradition, which refers to the ancient sites, pottery, stone tools, petroglyphs and other artifacts left behind by the ancestors as ''Hopi Footprints.'' This migration history is complex and detailed, and includes traditions relating specific clans to the Mogollon region. Hopi cultural advisors have also identified medicinal and culinary plants

at archeological sites in the region. Their knowledge about these plants was passed down to them from the ancestors who inhabited these ancient sites. Migration is also an important attribute of Zuni oral tradition, and includes accounts of Zuni ancestors passing through the Upland Mogollon region. The ancient villages mark the routes of these migrations. Zuni cultural advisors remark that the ancient sites were not abandoned. People returned to these places from time to time, either to reoccupy them or for the purpose of religious pilgrimages—a practice that has continued to the present day. Archeologists have found ceramic evidence at shrines in the Upland Mogollon region that confirms these reports. Zuni cultural advisors have names for plants endemic to the Mogollon region that do not grow on the Zuni Reservation. They also have knowledge about traditional medicinal and ceremonial uses for these resources, which has been passed down to them from their ancestors. Furthermore, Hopi and Zuni cultural advisors have recognized that their ancestors may have been co-resident at some of the sites in this region during their ancestral migrations.

There are differing points of view regarding the possible presence of Apache people in the Upland Mogollon region during the time that these ancient sites were occupied. Some Apache traditions describe interactions with Ancestral Puebloan people during this time, but according to these stories, Puebloan people and Apache people were regarded as having separate identities. The White Mountain Apache Tribe of the Fort Apache Reservation, Arizona, does not claim cultural affiliation with the human remains from these ancestral Upland Mogollon sites. As reported by Welch and Ferguson (2005), consultations between the White Mountain Apache Tribe of the Fort Apache Reservation, Arizona, and the Navajo Nation, Arizona, New Mexico & Utah; Pueblo of Acoma, New Mexico; and Pueblo of Laguna, New Mexico, have indicated that none of these tribes wish to pursue claims of affiliation with sites on White Mountain Apache Tribal lands. Finally, the White Mountain Apache Tribe of the Fort Apache Reservation, Arizona, supports the repatriation of human remains from these ancestral Upland Mogollon sites and is ready to assist the Hopi Tribe of Arizona and Zuni Tribe of the Zuni Reservation, New Mexico, in their reburial on tribal land.

Determinations Made by the Bureau of Indian Affairs and the Arizona State Museum

Officials of the Bureau of Indian Affairs and the Arizona State Museum have determined that:

- Pursuant to 25 U.S.C. 3001(9), the human remains described in this notice represent the physical remains of five individuals of Native American ancestry.
- Pursuant to 25 U.S.C. 3001(2), there is a relationship of shared group identity that can be reasonably traced between the Native American human remains and the Hopi Tribe of Arizona and Zuni Tribe of the Zuni Reservation, New Mexico.

Additional Requestors and Disposition

Representatives of any other Indian tribe that believes itself to be culturally affiliated with the human remains should contact John McClelland, NAGPRA Coordinator, Arizona State Museum, University of Arizona, Tucson, AZ 85721, telephone (520) 626–2950, before March 28, 2012. Repatriation of the human remains to the Hopi Tribe of Arizona and Zuni Tribe of the Zuni Reservation, New Mexico, may proceed after that date if no additional claimants come forward.

The Arizona State Museum is responsible for notifying the Hopi Tribe of Arizona; White Mountain Apache Tribe of the Fort Apache Indian Reservation, Arizona; and the Zuni Tribe of the Zuni Reservation, New Mexico that this notice has been published.

Dated: February 2, 2012.

Sherry Hutt,

Manager, National NAGPRA Program.

[FR Doc. 2012–4505 Filed 2–24–12; 8:45 am]

BILLING CODE 4312–50–P

DEPARTMENT OF THE INTERIOR

National Park Service

[2253–665]

Notice of Inventory Completion: Central Washington University Department of Anthropology, Ellensburg, WA

AGENCY: National Park Service, Interior.

ACTION: Notice.

SUMMARY: The Central Washington University Department of Anthropology has completed an inventory of human remains and associated funerary object in consultation with the appropriate Indian tribe, and has determined that there is a cultural affiliation between the human remains and associated funerary object and a present-day Indian tribe. Representatives of any Indian tribe that believes itself to be culturally affiliated with the human remains and associated funerary object may contact the Central Washington University Department of Anthropology. Repatriation of the human remains and associated funerary object to the Indian tribe stated below may occur if no additional claimants come forward.

DATES: Representatives of any Indian tribe that believes it has a cultural affiliation with the human remains and associated funerary object should contact the Central Washington University Department of Anthropology at the address below by March 28, 2012.

ADDRESSES: Lourdes Henebry-DeLeon, Central Washington University Department of Anthropology, Ellensburg, WA 98926–7544, telephone (509) 963–2671.

SUPPLEMENTARY INFORMATION: Notice is here given in accordance with the Native American Graves Protection and Repatriation Act (NAGPRA), 25 U.S.C. 3003, of the completion of an inventory of human remains and an associated funerary object in the control of Central Washington University Department of Anthropology, Ellensburg, WA. The human remains and associated funerary object were removed from Stevens County, WA.

This notice is published as part of the National Park Service's administrative responsibilities under NAGPRA, 25 U.S.C. 3003(d)(3). The determinations in this notice are the sole responsibility of the museum, institution or Federal agency that has control of the Native American human remains and associated funerary object. The National Park Service is not responsible for the determinations in this notice.

Consultation

A detailed assessment of the human remains was made by the Central Washington University Department of Anthropology professional staff in consultation with representatives of the Confederated Tribes of the Colville Reservation, Washington.

History and Description of the Remains

On an unknown date, human remains representing, at minimum, one individual were removed from Stevens County, WA, by an unknown individual. In 1974, the Thomas Burke Memorial State Museum (Burke Museum), University of Washington, transferred the human remains and associated funerary object to Central

Washington University. The one associated funerary object is a bone tool.

Documentation with the human remains states that the remains were recovered from ''Colville'' in Stevens County, WA. Based on osteological evidence and the associated funerary object, the human remains are Native American. The geographic location within the Plateau Culture Area, oral tradition, anthropological and historical research all indicate that the town of Colville lies within an area occupied by the San Poil and Nespelem tribes or bands, who are members of and legally represented by the Confederated Tribes of the Colville Reservation, Washington. Both the Colville and the Lakes tribes were part of the twelve tribes or bands that comprise the Confederated Tribes of the Colville Reservation, Washington.

Determinations Made by the Central Washington University, Department of Anthropology

Officials of Central Washington University Department of Anthropology have determined that:

- Pursuant to 25 U.S.C. 3001(9), the human remains described in this notice represent the physical remains of one individual of Native American ancestry.
- Pursuant to 25 U.S.C. 3001(3)(A), the one object described above is reasonably believed to have been placed with or near individual human remains at the time of death or later as part of the death rite or ceremony.
- Pursuant to 25 U.S.C. 3001(2), there is a relationship of shared group identity that can be reasonably traced between the Native American human remains and associated funerary object and the Confederated Tribes of the Colville Reservation, Washington.

Additional Requestors and Disposition

Representatives of any Indian tribe that believes itself to be culturally affiliated with the human remains and associated funerary object should contact Lourdes Henebry-DeLeon, Central Washington University Department of Anthropology, 400 University Drive, Ellensburg, WA 98926–7544, telephone (509) 963–2671, before March 28, 2012. Repatriation of the human remains and associated funerary object to the Confederated Tribes of the Colville Reservation, Washington, may proceed after that date if no additional claimants come forward.

The Central Washington University Department of Anthropology is responsible for notifying the Confederated Tribes of the Colville Reservation, Washington, that this notice has been published.

Dated: February 22, 2012.

Sherry Hutt,

Manager, National NAGPRA Program.

[FR Doc. 2012–4517 Filed 2–24–12; 8:45 am]

BILLING CODE 4312–50–P

DEPARTMENT OF THE INTERIOR

National Park Service

[2253–665]

Notice of Inventory Completion for Native American Human Remains and Associated Funerary Objects From Arizona in the Possession of San Diego State University, San Diego, CA; Correction

AGENCY: National Park Service, Interior.

ACTION: Notice; correction.

Notice is here given in accordance with the Native American Graves Protection and Repatriation Act (NAGPRA), 25 U.S.C. 3003, of the completion of an inventory of human remains and associated funerary objects in the possession of San Diego State University, San Diego, CA. The human remains and cultural items were removed from the vicinity of Casa Grande and Gila Butte, AZ, and from the vicinity of Tuscon, AZ.

This notice is published as part of the National Park Service's administrative responsibilities under NAGPRA, 25 U.S.C. 3003(d)(3). The determinations in this notice are the sole responsibility of the museum, institution or Federal agency that has control of the Native American human remains and associated funerary objects. The National Park Service is not responsible for the determinations in this notice.

This notice corrects the consultation and relationship of the human remains identified in a Notice of Inventory Completion previously published in the **Federal Register** (65 FR 79120–79121, December 18, 2000) to include the Gila River Indian Community of the Gila River Indian Reservation, AZ, for the items removed from site SDSU–0370 (1959–2).

In the **Federal Register** (65 FR 79120–79121, December 18, 2000), paragraph three is corrected by substituting the following paragraph:

A detailed assessment of the human remains was made by San Diego State University professional staff in consultation with representatives of the Gila River Indian Community of the Gila River Indian Reservation, Arizona, and the Tohono O'odham Nation of Arizona.

In the **Federal Register** (65 FR 79120–79121, December 18, 2000), paragraph six is corrected by substituting the following paragraph:

Based on the manner of internment, these individuals have been identified as Native American. For the human remains removed from site SDSU–0370 (1959–2), geographic affiliation is consistent with the historically documented territory of the Gila River Indian Community of the Gila River Indian Reservation, Arizona; for the human remains and cultural items removed from site SDSU–0371 (19701–10), geographic affiliation is consistent with the historically documented territory of the Tohono O'odham Nation of Arizona.

In the **Federal Register** (65 FR 79120–79121, December 18, 2000), paragraph seven is corrected by substituting the following paragraph:

Determinations Made by the San Diego State University

Officials of San Diego State University have determined that:

- Pursuant to 25 U.S.C. 3001(9), the human remains listed above represent the physical remains of two individuals of Native American ancestry.
- Pursuant to 25 U.S.C. 3001(3)(A), the two objects listed above are reasonably believed to have been placed with or near individual human remains at the time of death or later as part of the death rite or ceremony.
- Pursuant to 25 U.S.C. 3001(2), there is a relationship of shared group identity that can be reasonably traced between the Native American human remains and the associated funerary objects and the Gila River Indian Community of the Gila River Indian Reservation, Arizona, and the Tohono O'odham Nation of Arizona.

Representatives of any other Indian tribe that believes itself to be culturally affiliated with the human remains and associated funerary objects should contact Jaime Lennox, San Diego State University, Archeology Collections Management Program, 5500 Campanile Dr., San Diego, CA 92128–7010, telephone (619) 594–4575 before March 28, 2012. Repatriation of the human remains and associated funerary objects specified above to the Gila River Indian Community of the Gila River Indian Reservation, Arizona, and the Tohono O'odham Nation of Arizona may proceed after that date if no additional claimants come forward.

San Diego State University is responsible for notifying the Gila River Indian Community of the Gila River Indian Reservation, Arizona, and the Tohono O'odham Nation of Arizona that this notice has been published.

Dated: February 22, 2012.

Sherry Hutt,

Manager, National NAGPRA Program.

[FR Doc. 2012–4538 Filed 2–24–12; 8:45 am]

BILLING CODE 4312–50–P

DEPARTMENT OF THE INTERIOR

National Park Service

[2253–665]

Notice of Inventory Completion: U.S. Department of Agriculture, Forest Service, Gila National Forest, Silver City, NM, and Field Museum of Natural History, Chicago, IL

AGENCY: National Park Service, Interior.

ACTION: Notice.

SUMMARY: The U.S. Department of Agriculture, Forest Service, Gila National Forest and the Field Museum of Natural History have completed an inventory of human remains, in consultation with the appropriate Indian tribes, and have determined that there is a cultural affiliation between the human remains and present-day Indian tribes. Representatives of any Indian tribe that believes itself to be culturally affiliated with the human remains may contact the U.S. Department of Agriculture, Forest Service, Gila National Forest. Repatriation of the human remains to the Indian tribes stated below may occur if no additional claimants come forward.

DATES: Representatives of any Indian tribe that believes it has a cultural affiliation with the human remains should contact the U.S. Department of Agriculture, Forest Service, Gila National Forest at the address below by March 28, 2012.

ADDRESSES: Dr. Frank E. Wozniak, NAGPRA Coordinator, Southwestern Region, U.S. Department of Agriculture, Forest Service, 333 Broadway Blvd. SE., Albuquerque, NM 87102, telephone (505) 842–3238.

SUPPLEMENTARY INFORMATION: Notice is here given in accordance with the Native American Graves Protection and Repatriation Act (NAGPRA), 25 U.S.C. 3003, of the completion of an inventory of human remains in the control of the U.S. Department of Agriculture, Forest Service, Gila National Forest, Silver City, NM, and in the possession of the Field Museum of Natural History, Chicago, IL. The human remains were removed from the Gila National Forest, Catron County, NM.

This notice is published as part of the National Park Service's administrative responsibilities under NAGPRA, 25 U.S.C. 3003(d)(3). The determinations in this notice are the sole responsibility of the museum, institution or Federal agency that has control of the Native American human remains. The National Park Service is not responsible for the determinations in this notice.

Consultation

A detailed assessment of the human remains was made by the professional staff at the U.S. Department of Agriculture, Forest Service, Gila National Forest, and the Field Museum of Natural History in consultation with representatives of the Hopi Tribe of Arizona; Pueblo of Acoma, New Mexico; and the Zuni Tribe of the Zuni Reservation, New Mexico (hereinafter referred to as ''The Tribes'').

History and Description of the Remains

Between 1935 and 1955, human remains and associated funerary objects were recovered from several sites in the Gila National Forest, Catron County, NM, by Dr. Paul Martin of the Field Museum of Natural History, Chicago, IL. There have been several Notices of Inventory Completion (NICs) published in the **Federal Register** for human remains and associated funerary objects from these sites (63 FR 39293–39294, July 22, 1998; 70 FR 44686–44687, August 3, 2005; 70 FR 56483–56484, September 27, 2005; 71 FR 38413–38415, July 6, 2006; and 76 FR 43718–43719, July 21, 2011). Following these publications, the Gila National Forest and the Field Museum of Natural History staffs identified three additional sites on lands administered by the Gila National Forest. These sites are closely related to all of the other sites published in previous NICs and contain fragmentary human remains identified as Native American.

Between 1935 and 1955, Paul Martin excavated the Cordova Cave site. Human remains representing six individuals were identified from the site. No known individuals were identified. No associated funerary objects are present.

Between 1935 and 1955, Paul Martin excavated the Hinkle Park Cliff Dwellings site. Human remains representing one individual were identified from the site. No known individual was identified. No associated funerary objects are present.

Between 1935 and 1955, Paul Martin excavated the Pine Lawn Valley Pueblo site. Human remains representing one individual were identified from the site. No known individual was identified. No associated funerary objects are present.

Based on material culture, architecture and site organization, the sites have been identified as Upland Mogollon sites. Continuities of ethnographic materials, technology and architecture indicate affiliation of Upland Mogollon sites with historic and present-day Puebloan cultures. Oral traditions presented by representatives of The Tribes support cultural affiliation with these Upland Mogollon sites in this portion of southwestern New Mexico.

Determinations Made by the U.S. Department of Agriculture, Forest Service, Gila National Forest

Officials of the U.S. Department of Agriculture, Forest Service, Gila National Forest have determined that:

- Pursuant to 25 U.S.C. 3001(9), the human remains described above represent the physical remains of eight individuals of Native American ancestry.
- Pursuant to 25 U.S.C. 3001(2), there is a relationship of shared group identity that can be reasonably traced between the human remains and The Tribes.

Additional Requestors and Disposition

Representatives of any other Indian tribe that believes itself to be culturally affiliated with the human remains should contact Dr. Frank E. Wozniak, NAGPRA Coordinator, Southwestern Region, U.S. Department of Agriculture, Forest Service, 333 Broadway Blvd. SE, Albuquerque, NM 87102, telephone (505) 842–3238, before March 28, 2012. Repatriation of the human remains to The Tribes may proceed after that date if no additional claimants come forward.

The U.S. Department of Agriculture, Forest Service, Gila National Forest is responsible for notifying The Tribes that this notice has been published.

Dated: February 22, 2012.

Sherry Hutt,

Manager, National NAGPRA Program.

[FR Doc. 2012–4533 Filed 2–24–12; 8:45 am]

BILLING CODE 4312–50–P

DEPARTMENT OF THE INTERIOR

National Park Service

[NPS–WASO–NRNHL–0212–9498; 2200–3200–665]

National Register of Historic Places; Notification of Pending Nominations and Related Actions

Nominations for the following properties being considered for listing or related actions in the National Register were received by the National Park Service before February 4, 2012.

Pursuant to section 60.13 of 36 CFR part 60, written comments are being accepted concerning the significance of the nominated properties under the National Register criteria for evaluation. Comments may be forwarded by United States Postal Service, to the National Register of Historic Places, National Park Service, 1849 C St. NW., MS 2280, Washington, DC 20240; by all other carriers, National Register of Historic Places, National Park Service,1201 Eye St. NW., 8th Floor, Washington DC 20005; or by fax, 202–371–6447. Written or faxed comments should be submitted by March 13, 2012. Before including your address, phone number, email address, or other personal identifying information in your comment, you should be aware that your entire comment—including your personal identifying information—may be made publicly available at any time. While you can ask us in your comment to withhold your personal identifying information from public review, we cannot guarantee that we will be able to do so.

J. Paul Loether,

Chief, National Register of Historic Places/ National Historic Landmarks Program.

ARIZONA

Maricopa County

Sacred Heart Church, 920 S. 17th St., Phoenix, 12000124

CALIFORNIA

Riverside County

Steel Development House Number 2, 3125 N. Sunny View Dr., Riverside, 12000125

San Bernardino County

Ensign, Dr. Orville S., House, 304 S. Laurel Ave., Ontario, 12000126

San Mateo County

Howard—Ralston Eucalyptus Tree Rows, El Camino Real, CA 82, Burlingame, 12000127

Santa Clara County

Rhoades Ranch, 2290 Cochrane Rd., Morgan Hill, 12000128

Shasta County

Lorenz House, 1509 Yuba St., Redding, 12000129

CONNECTICUT

Middlesex County

Marlborough Street Historic District, 58, 64, 69, 70, 78, 88, & 92 Marlborough St., Portland, 12000130

IOWA

Poweshiek County

Montezuma Downtown Historic District, (Iowa's Main Street Commercial Architecture MPS) Roughly along 3rd, 4th, Main & Liberty Sts. around courthouse square, Montezuma, 12000131

MASSACHUSETTS

Barnstable County

Dune Shacks of Peaked Hill Bars Historic District, Inner Dune, Snail, & High Head Rds., Provincetown, 12000132

Essex County

Nahant Life—Saving Station, 96 Nahant Rd., Nahant, 12000133

NEW YORK

Seneca County

Women's Rights National Historic Park, 136 Fall St., Seneca Falls, 12000134

RHODE ISLAND

Providence County

Gately Building, 335 Main St., Pawtucket, 12000135

Providence Jewelry Manufacturing District (Boundary Increase), Bounded by US 195, Point, Parsonage, South, Hospital, Elbow, Ashcroft, Richmond, Eddy, & Ship Sts., Providence, 12000136

TENNESSEE

Knox County

Hopecote, 1820 Melrose Ave., Knoxville, 12000137

Williamson County

Nolensville School, 7248 Nolensville Rd., Nolensville, 12000138

A request for removal has been made for the following resource:

COLORADO

Eagle County

Wolcott Bridge, CO 131 at mi. .07, Wolcott, 12000137

[FR Doc. 2012–4387 Filed 2–24–12; 8:45 am]

BILLING CODE 4312–51–P

DEPARTMENT OF THE INTERIOR

Bureau of Reclamation

Notice of Availability of the Aspinall Unit Operations Final Environmental Impact Statement, Wayne N. Aspinall Unit, Colorado River Storage Project, Gunnison River, Colorado

AGENCY: Bureau of Reclamation, Interior.

ACTION: Notice of availability.

FES 12–01

SUMMARY: The Bureau of Reclamation (Reclamation), the Federal agency responsible for operation of the Aspinall Unit, announces the availability of the final environmental impact statement (FEIS) on proposed Aspinall Unit operations, Gunnison and Montrose Counties, Colorado.

DATES: Reclamation will not make a decision on the proposed action until at least 30 days after release of the FEIS. After the 30-day public review period, Reclamation will complete a Record of Decision (ROD). The ROD will state the action that will be implemented and discuss all factors leading to that decision.

ADDRESSES: The FEIS is available for review at *http://www.usbr.gov/uc/* (click on Environmental Documents). Send requests for paper copies or compact discs to Mr. Steve McCall, Bureau of Reclamation, Western Colorado Area Office, 2764 Compass Drive, Suite 106, Grand Junction, Colorado 81506. See the **SUPPLEMENTARY INFORMATION** section for locations where copies are available for public review and inspection.

FOR FURTHER INFORMATION CONTACT: Mr. Steve McCall, telephone (970) 248–0638; facsimile (970) 248–0601; email *smccall@usbr.gov*. Persons who use a telecommunications device for the deaf may call the Federal Information Relay Service (FIRS) at 1–800–877–8339 to contact the above individual during normal business hours. The FIRS is available 24 hours a day, 7 days a week, to leave a message or question with the above individual. You will receive a reply during normal business hours.

SUPPLEMENTARY INFORMATION: Pursuant to the National Environmental Policy Act of 1969 (as amended) and the Colorado River Storage Project Act of 1956, Reclamation, in cooperation with the State of Colorado, Colorado River Water Conservation District, Southwestern Water Conservation District, National Park Service, Platte River Power Authority, U.S. Fish and Wildlife Service, and Western Area Power Administration, has prepared a FEIS on Aspinall Unit operations. The Aspinall Unit consists of Blue Mesa, Morrow Point, and Crystal dams, reservoirs, and powerplants on the Gunnison River in western Colorado. The FEIS describes the potential effects of modifying the operation of the Aspinall Unit to provide sufficient releases of water at times and duration necessary to avoid jeopardy to endangered fish species and adverse modification of their designated critical habitat while maintaining and continuing to meet all authorized purposes of the Aspinall Unit. The intent of the new operations is to also assist in recovery of the species.

The programmatic biological opinion (PBO) prepared by the U.S. Fish and Wildlife Service in conjunction with the FEIS completes Endangered Species Act (ESA) compliance for the Aspinall Unit and provides ESA coverage for other

Federal projects and private water uses in the Gunnison Basin. The PBO also completes ESA compliance for the Dolores Project.

Consultation was held with the U.S. Fish and Wildlife Service and other cooperating agencies to develop alternatives that better met peak, duration, and base flow recommendations for the endangered fish. In the FEIS, a no action alternative and four action alternatives were analyzed. The preferred alternative provides operational guidance for the Aspinall Unit for specific downstream spring peak and duration flows that are dependent on forecasted inflow to the Aspinall Unit reservoirs. It also provides base flows outside of the spring runoff period.

The Aspinall Unit Draft Environmental Impact Statement (DEIS) was issued to the public on February 13, 2009, and a Notice of Availability of the DEIS was published in the **Federal Register** on February 13, 2009 (74 FR 7260). A 70-day public review and comment period for the DEIS ended on April 24, 2009. During the public comment period, two public hearings were held. The FEIS contains responses to all comments received on the DEIS.

Copies of the FEIS are available for public review and inspection at the following locations:

- Main Interior Building, Natural Resources Library, Room 1151, 1849 C Street, NW., Washington, DC 20240–0001.
- Bureau of Reclamation, Denver Office Library, Denver Federal Center, Sixth and Kipling, Building 67, Room 167, Denver, Colorado 80225–0007.
- Bureau of Reclamation, Upper Colorado Regional Office, 125 South State Street, Room 7418, Salt Lake City, Utah 84138–1147.
- Bureau of Reclamation, Western Colorado Area Office, 2764 Compass Drive, Suite 106, Grand Junction, Colorado 81506.

Libraries

- Western State College Library, 600 N. Adams Street, Gunnison, Colorado 81231.
- Montrose Public Library, 320 South 2nd Street, Montrose, Colorado 81401.
- Delta Public Library, 211 West 6th Street, Delta, Colorado 81416–0052.
- Mesa County Public Library, 443 North 6th Street, Grand Junction, Colorado 81501.
- Colorado Mesa University Library, 1100 North Avenue, Grand Junction, Colorado 81501.

Public Disclosure

Before including a name, address, telephone number, email address, or other personal identifying information in the comment, please be advised that the entire comment—including personal identifying information—may be made publicly available at any time. While a commenter may request that Reclamation withhold personal identifying information from public review, Reclamation cannot guarantee that they will be able to do so.

Dated: January 20, 2012.

Larry Walkoviak,

Regional Director—Upper Colorado Region, Bureau of Reclamation.

[FR Doc. 2012–4558 Filed 2–24–12; 8:45 am]

BILLING CODE 4310–MN–P

INTERNATIONAL TRADE COMMISSION

[Investigation No. 337–TA–829]

Certain Toner Cartridges and Components Thereof

AGENCY: U.S. International Trade Commission.

ACTION: Notice.

SUMMARY: Notice is hereby given that a complaint was filed with the U.S. International Trade Commission on January 23, 2012, under section 337 of the Tariff Act of 1930, as amended, 19 U.S.C. 1337, on behalf of Canon, Inc., Canon U.S.A., Inc., and Canon Virginia, Inc. The complaint alleges violations of section 337 based upon the importation into the United States, the sale for importation, and the sale within the United States after importation of certain toner cartridges and components thereof by reason of infringement of certain claims of U.S. Patent Nos. 5,903,803 (''the '803 patent'') and U.S. Patent No. 6,128,454 (''the '454 patent''). The complaint further alleges that an industry in the United States exists as required by subsection (a)(2) of section 337.

The complainants request that the Commission institute an investigation and, after the investigation, issue an exclusion order and cease and desist orders.

ADDRESSES: The complaint, except for any confidential information contained therein, is available for inspection during official business hours (8:45 a.m. to 5:15 p.m.) in the Office of the Secretary, U.S. International Trade Commission, 500 E Street SW., Room 112, Washington, DC 20436, telephone (202) 205–2000. Hearing impaired individuals are advised that information on this matter can be obtained by contacting the Commission's TDD terminal on (202) 205–1810. Persons with mobility impairments who will need special assistance in gaining access to the Commission should contact the Office of the Secretary at (202) 205–2000. General information concerning the Commission may also be obtained by accessing its internet server at *http://www.usitc.gov.* The public record for this investigation may be viewed on the Commission's electronic docket (EDIS) at *http://edis.usitc.gov.*

FOR FURTHER INFORMATION CONTACT: The Office of Unfair Import Investigations, U.S. International Trade Commission, telephone (202) 205–2560.

Authority: The authority for institution of this investigation is contained in section 337 of the Tariff Act of 1930, as amended, and in section 210.10 of the Commission's Rules of Practice and Procedure, 19 CFR 210.10 (2011).

Scope of Investigation: Having considered the complaint, the U.S. International Trade Commission, on February 21, 2012, *ordered that*—

(1) Pursuant to subsection (b) of section 337 of the Tariff Act of 1930, as amended, an investigation be instituted to determine whether there is a violation of subsection (a)(1)(B) of section 337 in the importation into the United States, the sale for importation, or the sale within the United States after importation of certain silicon microphone packages and products containing same that infringe one or more of claims 128–130, 132, 133 and 139–143 of the '803 patent and one or more of claims 24–30 of the '454 patent, and whether an industry in the United States exists or is in the process of being established as required by subsection (a)(2) of section 337;

(2) For the purpose of the investigation so instituted, the following are hereby named as parties upon which this notice of investigation shall be served:

(a) The complainants are:

Canon Inc., 30–2, Shimomaruko 3-chome, Ohta-ku, Tokyo 146–8501, Japan.

Canon U.S.A., Inc., One Canon Plaza, Lake Success, NY 11042.

Canon Virginia, Inc., 12000 Canon Boulevard, Newport News, VA 23606.

(b) The respondents are the following entities alleged to be in violation of section 337, and are the parties upon which the complaint is to be served:

Clover Holdings, Inc., 2700 West Higgins Road, Suite 100, Hoffman Estates, IL 60169.

Clover Technologies Group, LLC, d/b/a Depot International, f/k/a Depot America, f/k/a Image1 Products, 4200 Columbus Street, Ottawa, IL 61350.

Clover Vietnam Co., Ltd., Bau Cap Hamlet, Nhuan Duc Commune, Cu Chi District, Ho Chi Minh City, Vietnam.
Dataproducts USA, LLC, 2001 Anchor Court, Thousand Oaks, CA 91320.
Dataproducts Imaging Solutions S.A. de C.V., Av Circulo de la Amistad 2701, Mexicali, BC 21210, Mexico.
CAU, Inc., d/b/a Cartridges Are Us, 100 Raycraft Drive, Ithaca, MI 48847.
Shanghai Orink Infotech, International Co., Ltd., Room 307, No. 275–8 East Guoding Road, Shanghai, China 200433.
Orink Infotech International Co., Ltd., Unit 1205, 12F/L, Sino Plaza, 255 Gloucester Road, Causewat Bay, Hong Kong.
Zhuhai Rich Imaging Technology Co., Ltd., F4, B1, No. 7 Pingxiyi Road, Nanping S&T Industry Community, Zhuhai, Guangdong Province, China 519060.
Standard Image Co., Ltd., a/k/a Shanghai Orink Co., Ltd., Room 507–508, Building A, No. 1555, Kongjiang Road, Yangpu District, Shanghai, China 200092.
Zhuhai National Resources & Jingjie Imaging Products Co., Ltd., d/b/a Huebon Co., Limited, d/b/a Ink-Tank, 3/F, No. 1 Industrial Building, Pingdong 2 Road, Nanping Science & Technology Park, Zhuhai, Guangdong Province, China 519060.
Standard Image USA, Inc., d/b/a Imaging Standard Inc., 1621 East Saint Andrew Place, Santa Ana, CA 92705.
Printronic Corporation, d/b/a Printronic.com, d/b/a InkSmile.com, 1621 East Saint Andrew Place, Santa Ana, CA 92705.
Nukote, Inc., 2400 Dallas Parkway, Suite 230, Plano, TX 75093.
Nukote Internacional de Mexico, S.A. de C.V., Avenida del Parque 1175, Monterrey Technology Park, Cienega de Flores, Nuevo Leon, Mexico 65550.
Acecom, Inc.—San Antonio, d/b/a InkSell.com, 14833 Bulverde Road, San Antonio, TX 78247.
Atman, Inc., d/b/a pcRUSH.com, 1325 East El Segundo Boulevard, El Segundo, CA 90245.
Dexxxon Digital Storage, Inc., 7611 Green Meadows Drive, Lewis Center, OH 43035.
Discount Office Items, Inc., 302 Industrial Drive, Columbus, WI 53925.
Deal Express LLC, d/b/a Discount Office Items, 302 Industrial Drive, Columbus, WI 53925.
Do It Wiser LLC, d/b/a Image Toner, 1720 Cumberland Point Drive, Suite 21, Marietta, GA 30067.
E-Max Group, Inc., d/b/a Databazaar.com, 12070 Miramar Parkway, Miramar, FL 33025.
Green Project, Inc., 15335 Don Julian Road, Hacienda Heights, CA 91745.
GreenLine Paper Company, Inc., 631 South Pine Street, York, PA 17403.
IJSS Inc., d/b/a TonerZone.com, d/b/a InkJetSuperstore.com, 6380 Wilshire Boulevard, Suite 1018, Los Angeles, CA 90048.
Imaging Resources, LLC, 9434 Mason Avenue, Chatsworth, CA 91311.
Ink Technologies Printer Supplies, LLC, 7600 McEwen Road, Dayton, OH 45459.
Myriad Greeyn LLC, 2342 Croix Drive, Virginia Beach, VA 23451.
Office World, Inc., 115 Cleveland Street, Eugene, OR 97402.
OfficeWorld.com, Inc., 115 Cleveland Street, Eugene, Oregon 97402.
OnlineTechStores.com, Inc., d/b/a SuppliesOutlet.com, 10381 Double R Boulevard, Reno, NV 89521.
SupplyBuy.com, Inc., 230 4th Avenue N, Suite 300D, Nashville, TN 37219.
Virtual Imaging Products Inc., 135 Ormont Drive, Unit #14/15, North York, Ontario, M9L 1N6.
Zinyaw LLC, d/b/a TonerPirate.com, 14781 Memorial Drive, Suite 1359, Houston, TX 77079.

(c) The Office of Unfair Import Investigations, U.S. International Trade Commission, 500 E Street SW., Suite 401, Washington, DC 20436; and

(3) For the investigation so instituted, the Chief Administrative Law Judge, U.S. International Trade Commission, shall designate the presiding Administrative Law Judge.

Responses to the complaint and the notice of investigation must be submitted by the named respondents in accordance with section 210.13 of the Commission's Rules of Practice and Procedure, 19 CFR 210.13. Pursuant to 19 CFR 201.16(d)–(e) and 210.13(a), such responses will be considered by the Commission if received not later than 20 days after the date of service by the Commission of the complaint and the notice of investigation. Extensions of time for submitting responses to the complaint and the notice of investigation will not be granted unless good cause therefor is shown.

Failure of a respondent to file a timely response to each allegation in the complaint and in this notice may be deemed to constitute a waiver of the right to appear and contest the allegations of the complaint and this notice, and to authorize the administrative law judge and the Commission, without further notice to the respondents, to find the facts to be as alleged in the complaint and this notice and to enter an initial determination and a final determination containing such findings, and may result in the issuance of an exclusion order or a cease and desist order, or both, directed against the respondents.

Issued: February 22, 2012.

By order of the Commission.

James R. Holbein,

Secretary to the Commission.

[FR Doc. 2012–4432 Filed 2–24–12; 8:45 am]

BILLING CODE 7020–02–P

INTERNATIONAL TRADE COMMISSION

[Investigation No. 337–TA–830]

Certain Dimmable Compact Fluorescent Lamps and Products Containing Same; Institution of Investigation Pursuant to 19 U.S.C. 1337

AGENCY: U.S. International Trade Commission.

ACTION: Notice.

SUMMARY: Notice is hereby given that a complaint was filed with the U.S. International Trade Commission on January 23, 2012, under section 337 of the Tariff Act of 1930, as amended, 19 U.S.C. 1337, on behalf of Andrzej Bobel of Lake Forest, Illinois and Neptun Light, Inc. of Lake Forest, Illinois. An amended complaint was filed on February 8, 2012. The amended complaint alleges violations of section 337 based upon the importation into the United States, the sale for importation, and the sale within the United States after importation of certain dimmable compact fluorescent lamps and products containing same by reason of infringement of certain claims of U.S. Patent No. 5,434,480 (''the '480 patent'') and U.S. Patent No. 8,035,318 (''the '318 patent''). The amended complaint further alleges that an industry in the United States exists as required by subsection (a)(2) of section 337.

The complainants request that the Commission institute an investigation and, after the investigation, issue an exclusion order and cease and desist orders.

ADDRESSES: The amended complaint, except for any confidential information contained therein, is available for inspection during official business hours (8:45 a.m. to 5:15 p.m.) in the Office of the Secretary, U.S. International Trade Commission, 500 E Street SW., Room 112, Washington, DC 20436, telephone (202) 205–2000. Hearing impaired individuals are

advised that information on this matter can be obtained by contacting the Commission's TDD terminal on (202) 205–1810. Persons with mobility impairments who will need special assistance in gaining access to the Commission should contact the Office of the Secretary at (202) 205–2000. General information concerning the Commission may also be obtained by accessing its Internet server at *http://www.usitc.gov.* The public record for this investigation may be viewed on the Commission's electronic docket (EDIS) at *http://edis.usitc.gov.*

FOR FURTHER INFORMATION CONTACT: The Office of Unfair Import Investigations, U.S. International Trade Commission, telephone (202) 205–2560.

Authority: The authority for institution of this investigation is contained in section 337 of the Tariff Act of 1930, as amended, and in section 210.10 of the Commission's Rules of Practice and Procedure, 19 CFR 210.10 (2011).

Scope of Investigation: Having considered the amended complaint, the U.S. International Trade Commission, on February 21, 2012, *ordered that*—

(1) Pursuant to subsection (b) of section 337 of the Tariff Act of 1930, as amended, an investigation be instituted to determine whether there is a violation of subsection (a)(1)(B) of section 337 in the importation into the United States, the sale for importation, or the sale within the United States after importation of certain dimmable compact fluorescent lamps and products containing same that infringe one or more of claim 9 of the '480 patent and claims 1 and 12 of the '318 patent, and whether an industry in the United States exists as required by subsection (a)(2) of section 337;

(2) For the purpose of the investigation so instituted, the following are hereby named as parties upon which this notice of investigation shall be served:

(a) The complainants are:

Andrzej Bobel, 640 Leland Court, Lake Forest, IL 60045.

Neptun Light, Inc., 13950 W. Business Center Drive, Lake Forest, IL 60045.

(b) The respondents are the following entities alleged to be in violation of section 337, and are the parties upon which the complaint is to be served:

SK America, Inc. d/b/a Maxlite, 80 Little Falls Road, Fairfield, NJ 07004.

U Lighting America Inc., 2448 Balme Drive, San Jose, CA 95122.

Golden U Lighting Manufacturing (Shenzhen), Co., Ltd. 3F, Block A3, Xinjianxing, Industrial Park, Fengxin Road, Lou, Village, Guangming, District Shenzhen, Guangdong, China 518107.

Feit Electric Company, Inc., 4901 Gregg Road, Pico Rivera, CA 90660–2108.

General Electric Company, 3135 Easton Turnpike, Fairfield, CT 06828–0001.

Xiamen Topstar Lighting Co. Ltd., No. 676, Meixi Road, Tong'an, Xiamen, Fujan, China 361100.

Technical Consumer Products, Inc., 325 Campus Drive, Aurora, OH 44202.

TCP China, Shanghai Office, 2208–2210 Room, 2nd Building, 270 CaoXi, Road, Xuhui District, Shanghai, China.

TCP (Shanghai) Tiancanbao Lighting, Electrical Appliance Co., Ltd., Room A502, No. 250 Cai Xi Road, Shanghai, China 200235.

Shanghai Jensing Electron Electrical, Equipment Co., Ltd., No. 23 Kai Jiang Road East, Si Jing, Song Jiang, Shanghai, China 201601.

Shanghai Qiangling Electronics Co., Ltd., No. 139 Wang Dong South Road E, Si Jing song Jiang, Shanghai, China.

Zhejiang Qiang Ling Electronic Co. Ltd., No. 200, Xuefu Road, Runzhou District, Zhenjiang, Jiangsu 212003, China;

and

(3) For the investigation so instituted, the Chief Administrative Law Judge, U.S. International Trade Commission, shall designate the presiding Administrative Law Judge.

Responses to the amended complaint and the notice of investigation must be submitted by the named respondents in accordance with section 210.13 of the Commission's Rules of Practice and Procedure, 19 CFR 210.13. Pursuant to 19 CFR 201.16(d)–(e) and 210.13(a), such responses will be considered by the Commission if received not later than 20 days after the date of service by the Commission of the amended complaint and the notice of investigation. Extensions of time for submitting responses to the amended complaint and the notice of investigation will not be granted unless good cause therefor is shown.

Failure of a respondent to file a timely response to each allegation in the amended complaint and in this notice may be deemed to constitute a waiver of the right to appear and contest the allegations of the amended complaint and this notice, and to authorize the administrative law judge and the Commission, without further notice to the respondent, to find the facts to be as alleged in the amended complaint and this notice and to enter an initial determination and a final determination containing such findings, and may result in the issuance of an exclusion order or a cease and desist order or both directed against the respondent.

By order of the Commission.

Issued: February 22, 2012.

James R. Holbein,

Secretary to the Commission.

[FR Doc. 2012–4431 Filed 2–24–12; 8:45 am]

BILLING CODE 7020–02–P

INTERNATIONAL TRADE COMMISSION

[Investigation No. 337–TA–831]

Certain Electronic Devices for Capturing and Transmitting Images, and Components Thereof

AGENCY: U.S. International Trade Commission.

ACTION: Notice.

SUMMARY: Notice is hereby given that a complaint was filed with the U.S. International Trade Commission on January 10, 2012, under section 337 of the Tariff Act of 1930, as amended, 19 U.S.C. 1337, on behalf of Eastman Kodak Company of Rochester, New York. Letters supplementing the complaint were filed on January 11, 2012 and February 10, 2012. The complaint alleges violations of section 337 based upon the importation into the United States, the sale for importation, and the sale within the United States after importation of certain electronic devices for capturing and transmitting images and components thereof by reason of infringement of certain claims of U.S. Patent No. 7,210,161 (''the '161 patent''); U.S. Patent No. 7,742,084 (''the '084 patent''); U.S. Patent No. 7,453,605 (''the '605 patent''); U.S. Patent No. 7,936,391 (''the '391 patent''); and U.S. Patent No. 6,292,218 (''the '218 patent''). The complaint further alleges that an industry in the United States exists as required by subsections (a)(2) and (3) of section 337.

The complainant requests that the Commission institute an investigation and, after the investigation, issue an exclusion order and cease and desist orders.

ADDRESSES: The complaint, except for any confidential information contained therein, is available for inspection during official business hours (8:45 a.m. to 5:15 p.m.) in the Office of the Secretary, U.S. International Trade Commission, 500 E Street SW., Room 112, Washington, DC 20436, telephone (202) 205–2000. Hearing impaired individuals are advised that information on this matter can be obtained by contacting the Commission's TDD terminal on (202) 205–1810. Persons with mobility impairments who will need special assistance in gaining access

to the Commission should contact the Office of the Secretary at (202) 205–2000. General information concerning the Commission may also be obtained by accessing its internet server at *http://www.usitc.gov.* The public record for this investigation may be viewed on the Commission's electronic docket (EDIS) at *http://edis.usitc.gov.*

FOR FURTHER INFORMATION CONTACT: The Office of Unfair Import Investigations, U.S. International Trade Commission, telephone (202) 205–2560.

Authority: The authority for institution of this investigation is contained in section 337 of the Tariff Act of 1930, as amended, and in section 210.10 of the Commission's Rules of Practice and Procedure, 19 CFR 210.10 (2011).

Scope of Investigation: Having considered the complaint, the U.S. International Trade Commission, on February 21, 2012, *ordered that*—

(1) Pursuant to subsection (b) of section 337 of the Tariff Act of 1930, as amended, an investigation be instituted to determine whether there is a violation of subsection (a)(1)(B) of section 337 in the importation into the United States, the sale for importation, or the sale within the United States after importation of certain electronic devices for capturing and transmitting images and components thereof by reason of infringement of one or more of claims 5 and 7 of the '161 patent; claims 1 and 7–11 of the '084 patent; claims 1–6, 9–13, 16, 17, 19, and 20 of the '605 patent; claims 11, 12, and 15–18 of the '391 patent; and claims 15 and 23–27 of the '218 patent; and whether an industry in the United States exists as required by subsections (a)(2) and (3) of section 337;

(2) For the purpose of the investigation so instituted, the following are hereby named as parties upon which this notice of investigation shall be served:

(a) The complainant is:

Eastman Kodak Company, 343 State Street Rochester, NY 14650.

(b) The respondent is the following entity alleged to be in violation of section 337, and is the party upon which the complaint is to be served:

Apple Inc., 1 Infinite Loop, Cupertino, CA 95014;

High Tech Computer Corp. a/k/a HTC Corp., 23 Xinghua Road, Taoyuan 330, Taiwan;

HTC America, Inc., 13920 SE Eastgate Way, Suite 400, Bellevue, WA 98005;

Exedea, Inc., 5950 Corporate Drive, Houston, TX 77036;

(c) The Office of Unfair Import Investigations, U.S. International Trade Commission, 500 E Street SW., Suite 401, Washington, DC 20436; and

(3) For the investigation so instituted, the Chief Administrative Law Judge, U.S. International Trade Commission, shall designate the presiding Administrative Law Judge.

Responses to the complaint and the notice of investigation must be submitted by the named respondents in accordance with section 210.13 of the Commission's Rules of Practice and Procedure, 19 CFR 210.13. Pursuant to 19 CFR 201.16(d)–(e) and 210.13(a), such responses will be considered by the Commission if received not later than 20 days after the date of service by the Commission of the complaint and the notice of investigation. Extensions of time for submitting responses to the complaint and the notice of investigation will not be granted unless good cause therefor is shown.

Failure of a respondent to file a timely response to each allegation in the complaint and in this notice may be deemed to constitute a waiver of the right to appear and contest the allegations of the complaint and this notice, and to authorize the administrative law judge and the Commission, without further notice to the respondent, to find the facts to be as alleged in the complaint and this notice and to enter an initial determination and a final determination containing such findings, and may result in the issuance of an exclusion order or a cease and desist order or both directed against the respondent.

By order of the Commission.
Issued: February 22, 2012.

James R. Holbein,

Secretary to the Commission.

[FR Doc. 2012–4497 Filed 2–24–12; 8:45 am]

BILLING CODE 7020–02–P

INTERNATIONAL TRADE COMMISSION

[Investigation No. 332–529]

Advice Concerning Possible Modifications to the U.S. Generalized System of Preferences, 2011 Review of Additions and Competitive Need Limitation Waivers Institution of Investigation and Scheduling of Hearing

AGENCY: United States International Trade Commission.

ACTION: Notice of institution of investigation and scheduling of public hearing.

SUMMARY: Following receipt of a request on February 14, 2012, from the United States Trade Representative (USTR), the U.S. International Trade Commission (Commission) instituted investigation No. 332–529, *Advice Concerning Possible Modifications to the U.S. Generalized System of Preferences, 2011 Review of Additions and Competitive Need Limitation Waivers,* for the purpose of providing advice as to the probable economic effect of the addition of certain products to the list of items eligible for duty-free treatment under the U.S. GSP program and providing advice on whether any industry in the United States is likely to be adversely affected by a waiver of the competitive need limitations under the program for certain countries and articles.

DATES:

March 12, 2012: Deadline for filing a request to appear at the public hearing.

March 15, 2012: Deadline for filing pre-hearing briefs and statements.

March 30, 2012: Public hearing.

April 4, 2012: Deadline for filing post-hearing briefs and statements.

April 4, 2012: Deadline for filing all other written submissions.

May 14, 2012: Transmittal of Commission report to the USTR.

ADDRESSES: All Commission offices, including the Commission's hearing rooms, are located in the United States International Trade Commission Building, 500 E Street SW., Washington, DC. All written submissions should be addressed to the Secretary, United States International Trade Commission, 500 E Street SW., Washington, DC 20436. The public record for this investigation may be viewed on the Commission's electronic docket (EDIS) at *http://edis.usitc.gov.*

FOR FURTHER INFORMATION CONTACT: Information specific to this investigation may be obtained from Vincent Honnold, Project Leader, Office of Industries (202–205–3314 or *vincent.honnold@usitc.gov*), Michael McConnell, Deputy Project Leader, Office of Industries (202–205–3443 or *michael.mcconnell@usitc.gov*), or Cynthia B. Foreso, Technical Advisor, Office of Industries (202–205–3348 or *cynthia.foreso@usitc.gov*). For information on the legal aspects of these investigations, contact William Gearhart of the Commission's Office of the General Counsel (202–205–3091 or *william.gearhart@usitc.gov*). The media should contact Margaret O'Laughlin, Office of External Relations (202–205–1819 or *margaret.olaughlin@usitc.gov).* Hearing-impaired individuals may obtain information on this matter by contacting the Commission's TDD terminal at 202–205–1810. General information concerning the Commission may also be obtained by accessing its Internet server (*http://www.usitc.gov*). Persons with mobility impairments who

will need special assistance in gaining access to the Commission should contact the Office of the Secretary at 202–205–2000.

Background: The USTR has requested three types of advice. First, in accordance with sections 503(a)(1)(A), 503(e), and 131(a) of the Trade Act of 1974, and pursuant to the authority of the President delegated to the USTR by sections 4(c) and 8(c) and (d) of Executive Order 11846 of March 31, 1975, as amended, and pursuant to section 332(g) of the Tariff Act of 1930, the USTR has requested, and the Commission will provide, advice as to the probable economic effect on U.S. industries producing like or directly competitive articles, on U.S. imports, and on U.S. consumers of the elimination of U.S. import duties on the following article for all beneficiary developing countries under the GSP program: Sacks and bags (including cones) for the conveyance or packing of goods, of polymers of ethylene, provided for in HTS subheading 3923.21.00.

Second, in accordance with sections 503(a)(1)(B), 503(e), and 131(a) of the Trade Act of 1974, and pursuant to the authority of the President delegated to the USTR by sections 4(c) and 8(c) and (d) of Executive Order 11846 of March 31, 1975, as amended, and pursuant to section 332(g) of the Tariff Act of 1930, the USTR has requested, and the Commission will provide, advice as to the probable economic effect on U.S. industries producing like or directly competitive articles, on U.S. imports, and on U.S. consumers of the elimination of U.S. import duties on the following HTS subheadings and articles for least-developed beneficiary developing countries under the GSP program: HTS subheadings 5201.00.18 (Cotton, not carded or combed, having a staple length under 28.575 mm (1⅛ inches), n/harsh or rough, nesoi), 5201.00.22 (Cotton, not carded or combed, staple length of 28.575 mm or more but under 34.925 mm, described in gen. note 15), 5201.00.24 (Cotton, carded or combed, harsh or rough, staple length 29.36875 mm or more but n/o 34.925 mm, white in color, quota described in chapter 52 add US note 6), 5201.00.28 (Cotton, not carded or combed, harsh or rough, staple length of 29.36875 mm or more but under 34.925 mm & white in color, nesoi), 5201.00.34 (Cotton, not carded or combed, staple length of 28.575 mm or more but under 34.925 mm, other, quota described in chapter 52 add'l US note 7), 5201.00.38 (Cotton, not carded or combed, staple length of 28.575 mm or more but under 34.925 mm, nesoi), 5202.91.00 (Cotton garnetted stock), 5202.99.30 (Cotton card strips made from cotton waste having staple length under 30.1625 mm & lap, sliver & roving waste, nesoi), 5203.00.05 (Cotton fibers, carded or combed, of cotton fiber processed but not spun, described in gen. note 15), 5203.00.10 (Cotton fibers, carded or combed, of cotton fiber processed but not spun, quota described in chapter 52 add'l US note 10), 5203.00.30 (Cotton fibers, carded or combed, of cotton fiber processed, but not spun, nesoi), and 5203.00.50 (Cotton carded or combed, excluding fibers of cotton processed but not spun).

Third, under authority delegated by the President, pursuant to section 332(g) of the Tariff Act of 1930, and in accordance with section 503(d)(1)(A) of the Trade Act of 1974, the USTR has requested, and the Commission will provide, advice on whether any industry in the United States is likely to be adversely affected by a waiver of the competitive need limitations specified in section 503(c)(2)(A) of the Trade Act of 1974 for the following HTS subheadings and countries: 1602.50.20 (Prepared or preserved beef in airtight containers, other than corned beef, not containing cereals or vegetables) from Argentina; 2840.19.00 (Disodium tetraborate (refined borax) except anhydrous) from Turkey; 2921.19.60 (Other acyclic monoamines and their derivatives) from Philippines; 2922.41.00 (Lysine and its esters and salts thereof) from Brazil; 3307.41.00 (''Agarbatti'' and other odoriferous preparations which operate by burning, to perfume or deodorize rooms or used during religious rites) from India; 4015.19.10 (Seamless gloves of vulcanized rubber other than hard rubber, other than surgical or medical gloves) from Thailand; 7606.12.30 (Aluminum alloy, plates/sheets/strip, w/thick. o/0.2mm, rectangular (inc. sq), not clad) from Indonesia; 8415.90.80 (Parts for air conditioning machines, nesi) from Thailand; and 8708.30.50 (Pts. & access. of mtr. vehicles of 8701, nesoi, and 8702–8705, brakes and servo-brakes & pts thereof) from India. As requested, the Commission will also provide advice with respect to whether like or directly competitive products were being produced in the United States on January 1, 1995, and will provide advice as to the probable economic effect on total U.S. imports, as well as on consumers, of the requested waivers. For purposes of the competitive need limit in section 503(c)(2)(A)(i)(I) of the Trade Act of 1974, the Commission will use, as requested, the dollar value limit of $150,000,000.

To the extent possible, the Commission will provide its probable economic effect advice and statistics and other relevant information or advice separately and individually for each U.S. Harmonized Tariff Schedule subheading subject to this request. As requested, the Commission will provide its advice by May 14, 2012.

The USTR indicated that the portions of the Commission's report and working papers that contain the Commission's advice and assessment will be classified on the basis that they concern matters relating to the national security. In addition, the USTR said that he considers the Commission's report to be an inter-agency memorandum that will contain pre-decisional advice and be subject to the deliberative process privilege.

Public Hearing: A public hearing in connection with this investigation will be held at the U.S. International Trade Commission Building, 500 E Street SW., Washington, DC, beginning at 9:30 a.m. on March 30, 2012. Requests to appear at the public hearing should be filed with the Secretary, no later than 5:15 p.m., March 12, 2012, in accordance with the requirements in the ''Submissions'' section below. All pre-hearing briefs and statements should be filed not later than 5:15 p.m., March 15, 2012; and all post-hearing briefs and statements should be filed not later than 5:15 p.m., April 4, 2012. In the event that, as of the close of business on March 12, 2012, no witnesses are scheduled to appear at the hearing, the hearing will be canceled. Any person interested in attending the hearing as an observer or nonparticipant may call the Secretary to the Commission (202–205–2000) after March 12, 2012, for information concerning whether the hearing will be held.

Written Submissions: In lieu of or in addition to participating in the hearing, interested parties are invited to file written submissions concerning this investigation. All written submissions should be addressed to the Secretary, and should be received not later than 5:15 p.m., April 4, 2012. All written submissions must conform with the provisions of section 201.8 of the Commission's *Rules of Practice and Procedure* (19 CFR 201.8). Section 201.8 requires that a signed original (or a copy so designated) and fourteen (14) copies of each document be filed. In the event that confidential treatment of a document is requested, at least four (4) additional copies must be filed, in which the confidential information must be deleted (see the following

paragraph for further information regarding confidential business information). The Commission's rules authorize filing submissions with the Secretary by facsimile or electronic means only to the extent permitted by section 201.8 of the rules (see Handbook for Electronic Filing Procedures, *http://www.usitc.gov/secretary/fed_reg_notices/rules/documents/handbook_on_electronic_filing.pdf*). Persons with questions regarding electronic filing should contact the Secretary (202–205–2000).

Any submissions that contain confidential business information must also conform with the requirements of section 201.6 of the *Commission's Rules of Practice and Procedure* (19 CFR 201.6). Section 201.6 of the rules requires that the cover of the document and the individual pages be clearly marked as to whether they are the ''confidential'' or ''non-confidential'' version, and that the confidential business information be clearly identified by means of brackets. All written submissions, except for confidential business information, will be made available for inspection by interested parties.

The Commission may include in the report it sends to the President and the USTR some or all of the confidential business information it receives in this investigation. The USTR has asked that the Commission make available a public version of its report shortly after its sends its report to the President and the USTR, with any classified or confidential business information deleted. The confidential business information received in this investigation and used in the preparation of the report will not be published in the public version of the report in such manner as would reveal the operations of the firm supplying the information.

By order of the Commission.
Issued: February 22, 2012.

James R. Holbein,

Secretary to the Commission.

[FR Doc. 2012–4496 Filed 2–24–12; 8:45 am]

BILLING CODE 7020–02–P

INTERNATIONAL TRADE COMMISSION

[Investigation No. 337–TA–739]

Certain Ground Fault Circuit Interrupters and Products Containing Same, Investigations: Terminations, Modifications and Rulings

AGENCY: U.S. International Trade Commission.

ACTION: Notice.

SUMMARY: Notice is hereby given that the U.S. International Trade Commission has determined to review the final initial determination issued by the presiding administrative law judge in the above captioned investigation on December 20, 2011, finding no violation of section 337 (19 U.S.C. 1337). The Commission requests briefing from the parties on certain issues under review and from the parties and the public on remedy, the public interest, and bonding, as indicated in this notice.

FOR FURTHER INFORMATION CONTACT: Clark S. Cheney, Office of the General Counsel, U.S. International Trade Commission, 500 E Street SW., Washington, DC 20436, telephone 202–205–2661. Copies of non-confidential documents filed in connection with this investigation are or will be available for inspection during official business hours (8:45 a.m. to 5:15 p.m.) in the Office of the Secretary, U.S. International Trade Commission, 500 E Street SW., Washington, DC 20436, telephone 202–205–2000. General information concerning the Commission may also be obtained by accessing its Internet server (*http://www.usitc.gov*). The public record for this investigation may be viewed on the Commission's electronic docket (EDIS) at *http://edis.usitc.gov.* Hearing-impaired persons are advised that information on this matter can be obtained by contacting the Commission's TDD terminal on 202–205–1810.

SUPPLEMENTARY INFORMATION: The Commission instituted this investigation on October 8, 2010, based on a complaint and an amended complaint filed by Leviton Manufacturing Co., of Melville, New York (''Leviton''). 75 FR 62420 (Oct. 8, 2010). The complaint and amended complaint alleged violations of section 337 of the Tariff Act of 1930, as amended (19 U.S.C. 1337), in the importation into the United States, the sale for importation, and the sale within the United States after importation of certain ground fault circuit interrupters and products containing the same by reason of infringement of claims 1–7, 9–11, 13–17, 23–26, and 32–36 of U.S. Patent No. 7,463,124 (''the '124 patent''); claims 1–11, 13–28, 30–59, 61–64, and 74–83 of U.S. Patent No. 7,737,809 (''the '809 patent''); and claims 1–4 and 8 of U.S. Patent No. 7,764,151 (''the '151 patent''). The Notice of Investigation named numerous respondents, and during the course of the investigation several of the respondents were found to be in default or were terminated due settlement agreements, consent orders, or withdrawn allegations. Seven respondents remain in the investigation, consisting of Zhejiang Trimone Electric Science & Technology Co. Ltd., of Zhejiang, China (''Trimone''); Fujian Hongan Electric Co, Ltd., of Fujian, China (''Hongan''); TDE, Inc., of Bellevue, Washington (''TDE''); Shanghai ELE Manufacturing Corp., of Shanghai, China (''ELE''); Orbit Industries, Inc., of Los Angeles, California (''Orbit''); American Electric Depot Inc., of Fresh Meadows, New York (''AED''); and Shanghai Jia AO Electrical Co. of Shanghai, China (''Shanghai Jia'').

On December 20, 2011, the presiding administrative law judge (''ALJ'') issued his final initial determination (''ID'') in this investigation finding that the complainant had not sufficiently shown that a domestic industry exists with respect to the three asserted patents and/or articles protected by those patents. Accordingly, the ALJ found no violation of section 337.

On January 6, 2012, the complainant, the Commission investigative attorney, and a group of respondents consisting of Trimone, Hongan, and TDE filed petitions for review of the ID. Respondents ELE, Orbit, AED, and Shanghai Jia have not filed petitions for review of the ID.

Having examined the record of this investigation, including the ALJ's final ID, the petitions for review, and the responses thereto, the Commission has determined to review the final ID in its entirety.

The parties are requested to brief their positions on only the following issues, with reference to the applicable law and the evidentiary record:

1. Whether the complainant has carried its burden to show the existence of a domestic industry under 19 U.S.C. 1337(a)(3).

2. Whether the ID implicitly applied a different claim construction when analyzing the validity of the '121 and '151 patents than was applied when analyzing infringement of those patents.

3. Whether the ID relied upon unclaimed features of the disclosed inventions when analyzing the validity of the '121 and '151 patents.

4. Whether the ID considered all of respondents' arguments concerning the validity of the '809 patent.

5. Whether the following asserted patent claims (a) have been properly construed, (b) protect articles for which there is an industry in the United States, (c) are infringed by the accused articles, and (d) have not been shown to be invalid: Claim 7 of the '124 patent, claim 4 of the '151 patent, and claims 11 and 43 of the '809 patent.

In connection with the final disposition of this investigation, the Commission may (1) issue an order that could result in the exclusion of the subject articles from entry into the United States, and/or (2) issue one or more cease and desist orders that could result in the respondent(s) being required to cease and desist from engaging in unfair acts in the importation and sale of such articles. Accordingly, in addition to the issues identified above, the Commission is interested in receiving written submissions that address the form of remedy, if any, that should be ordered. If a party seeks exclusion of an article from entry into the United States for purposes other than entry for consumption, the party should so indicate and provide information establishing that activities involving other types of entry either are adversely affecting it or likely to do so. For background, see *In the Matter of Certain Devices for Connecting Computers via Telephone Lines,* Inv. No. 337–TA–360, USITC Pub. No. 2843 (December 1994) (Commission Opinion).

If the Commission contemplates some form of remedy, it must consider the effects of that remedy upon the public interest. The factors the Commission will consider include the effect that an exclusion order and/or cease and desist orders would have on (1) the public health and welfare, (2) competitive conditions in the U.S. economy, (3) U.S. production of articles that are like or directly competitive with those that are subject to investigation, and (4) U.S. consumers. The Commission is therefore interested in receiving written submissions that address the aforementioned public interest factors in the context of this investigation.

If the Commission orders some form of remedy, the U.S. Trade Representative, as delegated by the President, has 60 days to approve or disapprove the Commission's action. *See* Presidential Memorandum of July 21, 2005, 70 FR 43251 (July 26, 2005). During this period, the subject articles would be entitled to enter the United States under bond, in an amount determined by the Commission. The Commission is therefore interested in receiving submissions concerning the amount of the bond that should be imposed if a remedy is ordered.

Written Submissions: The parties to the investigation are requested to file written submissions on only the issues identified in this notice. Parties to the investigation, interested government agencies, and any other interested parties are encouraged to file written submissions on the issues of remedy, the public interest, and bonding. Such submissions should address the ALJ's recommendation on remedy and bonding. Complainants and the Commission investigative attorney are also requested to submit proposed remedial orders for the Commission's consideration. Complainants are also requested to state the dates that each of the asserted patents are set to expire and the HTSUS numbers under which the accused products are imported. The written submissions and proposed remedial orders must be filed no later than close of business on Friday, March 2, 2012. Reply submissions must be filed no later than the close of business on Friday, March 9, 2012. No further submissions on these issues will be permitted unless otherwise ordered by the Commission.

Persons filing written submissions must file the original document and 8 true copies thereof on or before the deadlines stated above with the Office of the Secretary. Any person desiring to submit a document to the Commission in confidence must request confidential treatment unless the information has already been granted such treatment during the proceedings. All such requests should be directed to the Secretary of the Commission and must include a full statement of the reasons why the Commission should grant such treatment. *See* 19 CFR 210.6. Documents for which confidential treatment by the Commission is sought will be treated accordingly. All nonconfidential written submissions will be available for public inspection at the Office of the Secretary.

The authority for the Commission's determination is contained in section 337 of the Tariff Act of 1930, as amended (19 U.S.C. 1337), and in Part 210 of the Commission's Rules of Practice and Procedure (19 CFR part 210).

By order of the Commission.

Issued: February 21, 2012.

James R. Holbein,

Secretary to the Commission.

[FR Doc. 2012–4394 Filed 2–24–12; 8:45 am]

BILLING CODE 7020–02–P

DEPARTMENT OF LABOR

Employment and Training Administration

Notice of Funding Opportunity and Solicitation for Grant Applications (SGA) for the Trade Adjustment Assistance Community College and Career Training Grants Program

AGENCY: Employment and Training Administration, Labor.

ACTION: Notice of Solicitation for Grant Applications (SGA).

Funding Opportunity Number: SGA/DFA PY 11–08.

SUMMARY: The U.S. Department of Labor (the Department) announces the availability of up to $500 million in grant funds to be awarded under the Trade Adjustment Assistance Community College and Career Training (TAACCCT) grants program. The TAACCCT grants program provides eligible institutions of higher education, as defined in section 102 of the Higher Education Act of 1965 (20 U.S.C. 1002), with funds to expand and improve their ability to deliver education and career training programs that can be completed in two years or less, and are suited for workers who are eligible for training under the Trade Adjustment Assistance (TAA) for Workers Program (''TAA-eligible workers'') of the Trade Act of 1974 (as amended) 19 U.S.C. 2271–2323, as well as other adults. Eligible institutions may be located in the 50 States, the District of Columbia, Puerto Rico or the U.S. territories; however, the competitiveness of institutions in the U.S. territories under this SGA may be impacted by their limited opportunity to serve TAA-eligible workers.

The Department intends to fund multi-year grants to eligible institutions for either developing new education and career training program strategies or for replicating existing evidence-based design, development, and/or delivery strategies for such programs.

In accordance with the TAACCCT requirement that each state receive at least 0.5 percent of the approximately $500 million total amount of funds available under this SGA, the Department intends to fund grants of $2.5 to $3.0 million to applicants from each State, the District of Columbia, and Puerto Rico. In addition to grants of $2.5 to $3.0 million to individual applicants, the Department intends to fund grants of $5 million to $15 million to consortium applicants that propose programs that will impact TAA-eligible workers and other adults across a state, region or regions, industry sector or cluster of related industries. Eligible institutions that received individual grants or were the ''lead institution'' under the Solicitation for Grant Applications for TAACCCT Grants Program Funding Opportunity Number: SGA/DFA PY 10–03, dated January 20, 2011, are not eligible to apply for grants under this SGA, however, may serve as member institutions in a consortium application under this SGA.

The complete SGA and any subsequent SGA amendments, in

connection with this solicitation are described in further detail on ETA's Web site at *http://www.doleta.gov/grants/* or on *http://www.grants.gov.* The Web sites provide application information, eligibility requirements, review and selection procedures and other program requirements governing this solicitation.

DATES: The closing date for receipt of applications is May 24, 2012.

FOR FURTHER INFORMATION CONTACT: Melissa Abdullah, 200 Constitution Avenue NW., Room N–4716, Washington, DC 20210; Telephone: 202–693–3346.

Signed February 16, 2012 in Washington, DC.

Donna Kelly,

Grant Officer, Employment and Training Administration.

[FR Doc. 2012–4258 Filed 2–24–12; 8:45 am]

BILLING CODE 4510–FN–P

DEPARTMENT OF LABOR

Bureau of Labor Statistics

Proposed Collection, Comment Request

ACTION: Notice.

SUMMARY: The Department of Labor, as part of its continuing effort to reduce paperwork and respondent burden, conducts a pre-clearance consultation program to provide the general public and Federal agencies with an opportunity to comment on proposed and/or continuing collections of information in accordance with the Paperwork Reduction Act of 1995 (PRA95) [44 U.S.C. 3506(c) (2)(A)]. This program helps to ensure that requested data can be provided in the desired format, reporting burden (time and financial resources) is minimized, collection instruments are clearly understood, and the impact of collection requirements on respondents can be properly assessed. The Bureau of Labor Statistics (BLS) is soliciting comments concerning the proposed extension of ''General Inquiries to State Agency Contacts.'' A copy of the proposed information collection request (ICR) can be obtained by contacting the individual listed below in the **ADDRESSES** section of this notice.

DATES: Written comments must be submitted to the office listed in the Addresses section of this notice on or before April 27, 2012.

ADDRESSES: Send comments to Nora Kincaid, BLS Clearance Officer, Division of Management Systems, Bureau of Labor Statistics, Room 4080, 2 Massachusetts Avenue NE., Washington, DC 20212. Written comments also may be transmitted by fax to 202–691–5111 (this is not a toll free number).

FOR FURTHER INFORMATION CONTACT: Nora Kincaid, BLS Clearance Officer, 202–691–7628 (this is not a toll free number). (See **ADDRESSES** section.)

SUPPLEMENTARY INFORMATION:

I. Background

The Bureau of Labor Statistics (BLS) awards funds to State agencies in the 50 States, the District of Columbia, Puerto Rico, Guam, and the Virgin Islands, hereinafter referred to as the ''States'') in order to jointly conduct BLS/State Labor Market Information and Occupational Safety and Health Statistics cooperative statistical programs, which themselves have been approved by OMB separately, as follows:

Current Employment Statistics	1220–0011
Local Area Unemployment Statistics	1220–0017
Occupational Employment Statistics	1220–0042
Quarterly Census of Employment and Wages Report	1220–0012
Annual Refiling Survey	1220–0032
Labor Market Information Cooperative Agreement	1220–0079
Multiple Worksite Report	1220–0134
Mass Layoff Statistics	1220–0090
Annual Survey of Occupational Injuries and Illnesses	1220–0045
Census of Fatal Occupational Injuries	1220–0133
BLS/OSHS Federal State Cooperative Agreement	1220–0149

To ensure the timely flow of information and to be able to evaluate and improve the BLS/State cooperative programs management and operations, it is necessary to conduct ongoing communications between the BLS and its State partners. Whether information requests deal with program deliverables, program enhancements, operations, or administrative issues, questions and dialogue are crucial to the successful implementation of these programs.

II. Current Action

Office of Management and Budget clearance is being sought for the General Inquiries to State Agency Contacts. Information collected under this clearance is used to support the administrative and programmatic needs of jointly conducted BLS/State Labor Market Information and Occupational Safety and Health Statistics cooperative statistical programs.

III. Desired Focus of Comments

The Bureau of Labor Statistics is particularly interested in comments that:

- Evaluate whether the proposed collection of information is necessary for the proper performance of the functions of the agency, including whether the information will have practical utility.
- Evaluate the accuracy of the agency's estimate of the burden of the proposed collection of information, including the validity of the methodology and assumptions used.
- Enhance the quality, utility, and clarity of the information to be collected.
- Minimize the burden of the collection of information on those who are to respond, including through the use of appropriate automated, electronic, mechanical, or other technological collection techniques or other forms of information technology, e.g., permitting electronic submissions of responses.

Type of Review: Extension of a currently approved collection.

Agency: Bureau of Labor Statistics.

Title: General Inquiries to State Agency Contacts.

OMB Number: 1220–0168.

Affected Public: State, Local, or Tribal Government.

Total Respondents: 54.

Frequency: As needed.

Total Responses: 23,890.

Average Time per Response: 40 minutes.

Estimated Total Burden Hours: 15,927.

Total Burden Cost (Capital/Startup): $0.

Total Burden Cost (Operating/Maintenance): $0.

Comments submitted in response to this notice will be summarized and/or included in the request for Office of Management and Budget approval of the information collection request; they also will become a matter of public record.

Signed at Washington, DC this 21st day of February 2012.

Kimberley D. Hill,

Chief, Division of Management Systems, Bureau of Labor Statistics.

[FR Doc. 2012–4370 Filed 2–24–12; 8:45 am]

BILLING CODE 4510–24–P

MORRIS K. UDALL AND STEWART L. UDALL FOUNDATION, THE UNITED STATES INSTITUTE FOR ENVIRONMENTAL CONFLICT RESOLUTION

Agency Information Collection Activities: Proposed Collection; Renewal of Currently Approved Information Collection; Comment Request

AGENCY: Morris K. Udall and Stewart L. Udall Foundation, U.S. Institute for Environmental Conflict Resolution.

ACTION: Notice.

SUMMARY: In compliance with the Paperwork Reduction Act (44 U.S.C. 3501 *et seq.*), this document announces that the U.S. Institute for Environmental Conflict Resolution (the U.S. Institute), part of the Udall Foundation, will submit for Office of Management and Budget (OMB) review, a renewal request for the currently approved information collection request (ICR), OMB Control No. 3320–0008 due to expire 04/30/2012: Application for the National Roster of Environmental Conflict Resolution and Collaboration Professionals. The renewal request includes revisions to the currently approved collection.

Comments are invited on: (1) Whether the proposed collection of information is necessary for the performance of the functions of the agency, including whether the information has practical utility; (2) the accuracy of the agency's estimate of the time spent completing the application (''burden of the proposed collection of information''); (3) ways to enhance the quality, utility, and clarity of the information collected; (4) ways to minimize the burden of the collection of information on those who are to respond, including through the use of technology.

DATES: Comments must be submitted on or before April 28, 2012.

FOR FURTHER INFORMATION OR TO SUBMIT COMMENTS, CONTACT: Patricia Orr, Director of Policy, Planning and Budget, U.S. Institute for Environmental Conflict Resolution, 130 South Scott Avenue, Tucson, Arizona 85701, Fax: 520–670–5530, Phone: 520–901–8548, E-mail: *orr@ecr.gov*. When submitting comments, reference this **Federal Register** Notice.

SUPPLEMENTARY INFORMATION:

Abstract: The U.S. Institute is a non-partisan federal program established by Congress to provide impartial assistance to parties in resolving environmental, natural resource, and public lands conflicts involving the U.S. government. The U.S. Institute accomplishes much of its work by partnering, contracting with, or referral to, experienced practitioners. In addition, the U.S. Institute maintains the National Roster of Environmental Conflict Resolution and Collaboration Professionals (roster). The Application for the National Roster of Environmental Conflict Resolution and Collaboration Professionals (application) compiles data available from the resumes of environmental neutrals (mediators, facilitators, etc.) into a format that is standardized for efficient and fair eligibility review, database searches, and retrievals.

The roster, the application and the related entry criteria, were developed collaboratively and with the support of partner federal agencies including the Environmental Protection Agency. To apply for membership of the roster a professional needs to complete the application form one time. Once an application is approved, the roster member has access to update information online as needed.

The proposed collection is necessary for screening new applicants and the maintenance of the online roster system. The application is available from the U.S. Institute's Web site at *http://roster.ecr.gov/reference/documents/2012DRAFTRosterApplication.pdf*.

Burden Statement

Affected public: Environmental conflict resolution professionals (new respondents); existing roster members (for updating).

Frequency of Response—new applicants: one time for new applicants.

Frequency of Response—existing applicants: one time first year update by all existing roster members to update existing information to the new format, with suggested updating for major information changes in the following two years.

Estimated Average Annual Respondents: 195 (25 new respondents/year; 310 existing respondents in the first year, 100/year in the following two years).

Total Annual Hours Burden: 234.15 hrs (62.50 hours for new respondents; 465 hours for existing respondents in the first year to update their information to the new format, 25 hours per year for the following two years).

Annual Cost Burden: $11,055 new response and updates combined ($2,951 for new respondents/year; $21,953 for existing respondent updates in the first year, $1,180 for existing respondent updates in the following two years). Labor costs exclusively; no capital or start-up costs.

Authority: 20 U.S.C. 5601–5609.

Dated: February 21, 2012.

Ellen Wheeler,

Executive Director, Udall Foundation.

[FR Doc. 2012–4445 Filed 2–24–12; 8:45 am]

BILLING CODE 6820–FN–P

NATIONAL COUNCIL ON DISABILITY

Sunshine Act Meeting Notice

TYPE: Quarterly meeting.

DATE AND TIME: March 9, 2012, 9 a.m.–5 p.m.

LOCATION: 1177 Avenue of the Americas, New York, NY 10036.

STATUS: The meeting on March 9 will be open to the public.

MATTERS TO BE CONSIDERED: The agenda for the board meeting includes an update on the Council's various reports including the annual progress report, a discussion on several funding proposals including a project focused on the subminimum wage and competitive integrated employment, a public comment session, a presentation by Peter Blanck, Chairman of the Burton Blatt Institute at Syracuse University, to provide an update on emerging issues in regards to disability law, policy, and research such as equal access to technology and opportunities for competitive integrated employment and other items to be determined. A public comment session will be held on Friday, March 9, 2012 from 1:30 p.m. until 2 p.m.

Interested parties may join the meeting in a listening-only capacity (with the exception of the public comment period) using the following call-in information: Call-in number: 888–428–9505. The passcode is ''NCD Meeting.'' Written comments on disability-related issues of concern or interest may be mailed to NCD's office at 1331 F Street NW., Suite 850, Washington, DC 20004 or faxed to the NCD office at (202) 272–2022. Comments may also be emailed to *PublicComment@ncd.gov* at any time.

CONTACT PERSON FOR MORE INFORMATION: Lawrence Carter-Long, NCD, 1331 F Street NW., Suite 850, Washington, DC 20004; 202–272–2004 (V), 202–272–2074 (TTY).

ACCOMMODATIONS: Those who plan to attend and require accommodations should notify NCD as soon as possible to allow time to make arrangements.

Dated: February 23, 2012.

Aaron Bishop,

Executive Director.

[FR Doc. 2012–4714 Filed 2–23–12; 4:15 pm]

BILLING CODE P

NATIONAL SCIENCE FOUNDATION

Notice of Buy American Waiver under the American Recovery and Reinvestment Act of 2009

AGENCY: National Science Foundation (NSF).

ACTION: Notice.

SUMMARY: NSF is hereby granting a limited exemption of section 1605 of the American Recovery and Reinvestment Act of 2009 (Recovery Act), Public Law 111–5, 123 Stat. 115, 303 (2009), with respect to the purchase of the quiet seawater system balancing valves that will be used in the Alaska Region Research Vessel (ARRV). These valves regulate the proper flow of cooling water to the ship's major machinery.

DATES: February 27, 2012.

ADDRESSES: National Science Foundation, 4201 Wilson Blvd., Arlington, Virginia 22230.

FOR FURTHER INFORMATION CONTACT: Mr. Jeffrey Leithead, Division of Acquisition and Cooperative Support, 703–292–4595

SUPPLEMENTARY INFORMATION: In accordance with section 1605(c) of the Recovery Act and section 176.80 of Title 2 of the Code of Federal Regulations, the National Science Foundation (NSF) hereby provides notice that on February 15, 2012, the NSF Chief Financial Officer, in accordance with a delegation order from the Director of the agency, granted a limited project exemption of section 1605 of the Recovery Act (Buy American provision) with respect to the quiet seawater system balancing valves that will be used in the ARRV. The basis for this exemption is section 1605(b)(2) of the Recovery Act, in that balancing valves of satisfactory quality are not produced in the United States in sufficient and reasonably available commercial quantities. The total cost of the three (3) required balancing valves (~$43,500) represents less than 0.1% of the total $148 million Recovery Act award provided for construction of the ARRV.

I. Background

The Recovery Act appropriated $400 million to NSF for several projects being funded by the Foundation's Major Research Equipment and Facilities Construction (MREFC) account. The ARRV is one of NSF's MREFC projects. Section 1605(a) of the Recovery Act, the Buy American provision, states that none of the funds appropriated by the Act ''may be used for a project for the construction, alteration, maintenance, or repair of a public building or public work unless all of the iron, steel, and manufactured goods used in the project are produced in the United States.''

The ARRV has been developed under a cooperative agreement awarded to the University of Alaska, Fairbanks (UAF) that began in 2007. UAF executed the shipyard contract in December 2009 and the project is currently under construction. The purpose of the Recovery Act is to stimulate economic recovery in part by funding current construction projects like the ARRV that are ''shovel ready'' without requiring projects to revise their standards and specifications, or to restart the bidding process again.

Subsections 1605(b) and (c) of the Recovery Act authorize the head of a Federal department or agency to waive the Buy American provision if the head of the agency finds that: (1) Applying the provision would be inconsistent with the public interest; (2) the relevant goods are not produced in the United States in sufficient and reasonably available quantities and of a satisfactory quality; or (3) the inclusion of the goods produced in the United States will increase the cost of the project by more than 25 percent. If the head of the Federal department or agency waives the Buy American provision, then the head of the department or agency is required to publish a detailed justification in the **Federal Register**. Finally, section 1605(d) of the Recovery Act states that the Buy American provision must be applied in a manner consistent with the United States' obligations under international agreements.

II. Finding That Relevant Goods are Not Produced in the United States in Sufficient and Reasonably Available Quality

Cavitation, which is the formation of small bubbles due to a vacuum being created when the flow of water is not smooth, is an important factor to control for underwater radiated noise. Cavitation is most prevalent on propellers, but can occur whenever an improperly designed part of the hull moves through the water or water flows through an improperly designed portion of a system. The ARRV is specifically designed to meet a low underwater radiated noise standard that relates to fish hearing (Specification Section 073.2). This standard is critical to science operations in that if the noise from the vessel is too high, the behavior of the species being studied will be changed, which negatively impacts the population data being collected. If the vessel does not meet this low underwater radiated noise standard, the science mission requirements will not be met. All modern research vessels are being built with low underwater noise in mind not only because of improved science capabilities but also because of the growing understanding of the negative environmental effects of noise in the water, particularly for marine mammals.

The balancing valves are part of the seawater cooling system on the ARRV and are necessary to adjust proper flow rates to major equipment so that they operate at the proper temperature. The valves are installed in the system piping, and the intake for this system connects directly to the sea through an opening in the hull. Any cavitation noise quickly travels through the water in the pipes and then radiates out into the water. The ARRV specification Section 523 specifies that the seawater cooling system is a ''noise critical'' system. This particular system is always in operation, and the design and installation of the system and its components affects the vessel's underwater radiated noise signature (noise emitting into the open water from the vessel). Orifice plates, flat plates with the correctly-sized hole are commonly used for balancing seawater systems in vessels, but they cause significant cavitation. Orifice plates are only suitable for vessels that are not designed to reduce underwater radiated noise. Therefore, technical requirements for selecting the quiet seawater system balancing valves used in the ARRV include:

1. Developed from materials suitable for use in seawater;
2. Designed for ''Quiet Type'': Valve body and internal components specifically designed for smooth flow and low cavitation;
3. Sized the same as the nominal pipe size in which they are installed (smaller size increases the chances of cavitation).

Failure to meet any of these technical requirements would have severe negative consequences for the project by preventing the vessel from meeting the specified low underwater radiated noise standard described above.

If the valves are not suitable for use in seawater, then they will prematurely fail, which could in turn cause overheating of the machinery or require operating the vessel at reduced performance until repairs can be made. Also, if not made for seawater, the body and internal component will erode, change the shape, and in turn cause cavitation.

If the valves are not specifically designed and sized for smooth water flow, cavitation will occur and the vessel's low underwater radiated noise

requirement will not be met. The underwater radiated noise limit is being achieved through a material specification (specifically calling out hardware requirements to the shipyard) as opposed to a performance specification where the shipyard has responsibility for meeting the requirement any way they see fit. Therefore, UAF bears full responsibility for this capability, which makes any deviation from the specifications an even greater risk to project success.

The ''quiet'' seawater system balancing valves are larger than conventional balancing valves, and future replacement of non-compliant valves would entail costly re-design and re-work of the entire cooling system. Because of the piping size, type, and location, this would cost between $300,000 and 500,000 or roughly 10 times the cost of the compliant valves.

The market research included trade publication and Web based searches for balancing valves of all types. Approximately thirty (30) companies were identified that manufacture balancing valves. Of these, only five (5) appeared to produce valves that would meet specification requirements (based on the information found on company Web sites) and therefore warranted additional investigation (via telephone and email) by the shipyard. Of the five, only two (2) companies were identified that could produce low cavitation, marine-grade seawater system balancing valves; one was both foreign-owned and manufactured, while the other was U.S.-owned and foreign-manufactured. The shipyard decided to pursue the U.S.-owned valve company as the best option, but this purchase would still require an exemption due to foreign manufacture.

The project's conclusion is that there are no U.S. manufacturers who produce a suitable seawater system balancing valves that meet all of the ARRV requirements, so an exemption to the Buy American requirements is necessary.

In the absence of a U.S. manufacturer that could provide requirements-compliant quiet seawater system balancing valves, UAF requested that NSF issue a Section 1605 exemption determination with respect to the purchase of a foreign-supplied, requirements-compliant quiet seawater system balancing valves, so that the vessel will meet the specific design and technical requirements that, as explained above, are necessary for this vessel to be able to perform its mission successfully. Furthermore, the shipyard's market research indicated that quiet seawater system balancing valves compliant with the ARRV's technical specifications and requirements are commercially available from a U.S. company within their standard product lines, but are manufactured overseas, which necessitates an exemption.

NSF's Division of Acquisition and Cooperative Support (DACS) and other NSF program staff reviewed the UAF exemption request submittal, found that it was complete, and determined that sufficient technical information was provided in order for NSF to evaluate the exemption request and to conclude that an exemption is needed and should be granted.

III. Exemption

On February 15, 2012, based on the finding that no domestically produced quiet seawater system balancing valves met all of the ARRV's technical specifications and requirements and pursuant to section 1605(b), the NSF Chief Financial Officer, in accordance with a delegation order from the Director of the agency signed on May 27, 2010, granted a limited project exemption of the Recovery Act's Buy American requirements with respect to the procurement of quiet seawater system balancing valves.

Dated: February 17, 2012.

Lawrence Rudolph,

General Counsel.

[FR Doc. 2012–4460 Filed 2–24–12; 8:45 am]

BILLING CODE 7555–01–P

NUCLEAR REGULATORY COMMISSION

[Docket No. 50–423; NRC–2012–0044]

Central Vermont Public Service Corporation, Millstone Power Station, Unit 3; Notice of Consideration of Approval of Application Regarding Proposed Acquisition and Opportunity for a Hearing

AGENCY: Nuclear Regulatory Commission.

ACTION: Notice of request for license transfer, opportunity to comment, opportunity to request a hearing.

DATES: Comments must be filed by March 28, 2012. A request for a hearing must be filed by March 19, 2012.

ADDRESSES: You may access information and comment submissions related to this document by searching on *http://www.regulations.gov* under Docket ID NRC–2012–0044. You may submit comments by the following methods:

- *Federal Rulemaking Web site:* Go to *http://www.regulations.gov* and search for Docket ID NRC–2012–0044. Address questions about NRC dockets to Carol Gallagher; telephone: 301–492–3668; email: *Carol.Gallagher@nrc.gov.*
- *Mail comments to:* Cindy Bladey, Chief, Rules, Announcements, and Directives Branch (RADB), Office of Administration, Mail Stop: TWB–05–B01M, U.S. Nuclear Regulatory Commission, Washington, DC 20555–0001.
- *Fax comments to:* RADB at 301–492–3446.

For additional direction on accessing information and submitting comments, see ''Accessing Information and Submitting Comments'' in the **SUPPLEMENTARY INFORMATION** section of this document.

FOR FURTHER INFORMATION CONTACT: Carleen J. Sanders, Project Manager, Plant Licensing Branch I–2, Division of Operating Reactor Licensing, Office of Nuclear Reactor Regulation, U.S. Nuclear Regulatory Commission, Washington, DC 20555. Telephone: 301–415–1603; email: *carleen.sanders@nrc.gov.*

SUPPLEMENTARY INFORMATION:

I. Accessing Information and Submitting Comments

A. Accessing Information

Please refer to Docket ID NRC–2012–0044 when contacting the NRC about the availability of information regarding this document. You may access information related to this document by the following methods:

- *Federal Rulemaking Web Site:* Go to *http://www.regulations.gov* and search for Docket ID NRC–2012–0044.
- *NRC's Agencywide Documents Access and Management System (ADAMS):* You may access publicly-available documents online in the NRC Library at *http://www.nrc.gov/reading-rm/adams.html.* To begin the search, select ''*ADAMS Public Documents*'' and then select ''*Begin Web-based ADAMS Search.*'' For problems with ADAMS, please contact the NRC's Public Document Room (PDR) reference staff at 1–800–397–4209, 301–415–4737, or by email to *pdr.resource@nrc.gov.* The application dated September 9, 2011, as supplemented by letter dated November 4, 2011, is available electronically under ADAMS Accession Nos. ML11256A051 and ML11311A148, respectively.
- *NRC's PDR:* You may examine and purchase copies of public documents at the NRC's PDR, Room O1–F21, One White Flint North, 11555 Rockville Pike, Rockville, Maryland 20852.

B. Submitting Comments

Please include Docket ID NRC–2012–0044 in the subject line of your comment submission, in order to ensure that the NRC is able to make your comment submission available to the public in this docket.

The NRC cautions you not to include identifying or contact information in comment submissions that you do not want to be publicly disclosed. The NRC posts all comment submissions at *http://www.regulations.gov* as well as entering the comment submissions into ADAMS, and the NRC does not edit comment submissions to remove identifying or contact information.

If you are requesting or aggregating comments from other persons for submission to the NRC, then you should inform those persons not to include identifying or contact information in their comment submissions that they do not want to be publicly disclosed. Your request should state that the NRC will not edit comment submissions to remove such information before making the comment submissions available to the public or entering the comment submissions into ADAMS.

II. Background

The U.S. Nuclear Regulatory Commission (NRC or the Commission) is considering the issuance of an order under 10 CFR 50.80 approving the indirect transfer of the Renewed Facility Operating License (No. NPF–49) for the Millstone Power Station, Unit 3 (MPS3) to the extent held by Central Vermont Public Service Corporation (CVPS). CVPS is a 1.7303% minority co-owner of MPS3. The remaining co-owners are Massachusetts Municipal Wholesale Electric Company (4.7990%) and Dominion Nuclear Connecticut, Inc. (93.4707%). Dominion Nuclear Inc. is the licensed operator. According to an application for approval filed by CVPS in connection with the acquisition of CVPS by Gaz Métro Limited Partnership, CVPS will become an indirect wholly owned subsidiary of Gaz Métro Limited Partnership. CVPS will continue to be a minority co-owner and licensee of the facility. This application does not affect Massachusetts Municipal Wholesale Electric Company's ownership or Dominion Nuclear Connecticut, Inc.'s ownership and operation of the facility.

No physical changes to the MPS3 facility or operational changes are being proposed in the application.

Pursuant to 10 CFR 50.80, no license, or any right thereunder, shall be transferred, directly or indirectly, through transfer of control of the license, unless the Commission shall give its consent in writing. The Commission will approve an application for the indirect transfer of a license, if the Commission determines that the proposed acquisition will not affect the qualifications of the licensee to hold the license, and that the transfer is otherwise consistent with applicable provisions of law, regulations, and orders issued by the Commission pursuant thereto.

The filing of requests for hearing and petitions for leave to intervene, and written comments with regard to the license transfer application, are discussed below.

III. Opportunity To Request a Hearing

Within 20 days from the date of publication of this notice, any person(s) whose interest may be affected by the Commission's action on the application may request a hearing and intervention via electronic submission through the NRC E-filing system. Requests for a hearing and petitions for leave to intervene should be filed in accordance with the Commission's rules of practice set forth in Subpart C, ''Rules of General Applicability: Hearing Requests, Petitions to Intervene, Availability of Documents, Selection of Specific Hearing Procedures, Presiding Officer Powers, and General Hearing Management for NRC Adjudicatory Hearings,'' of 10 CFR Part 2. In particular, such requests and petitions must comply with the requirements set forth in 10 CFR 2.309. Untimely requests and petitions may be denied, as provided in 10 CFR 2.309(c)(1), unless good cause for failure to file on time is established. In addition, an untimely request or petition should address the factors that the Commission will also consider, in reviewing untimely requests or petitions, set forth in 10 CFR 2.309(c)(1)(i)–(viii). NRC regulations are accessible electronically from the NRC Library on the NRC Web site at *http://www.nrc.gov/reading-rm/doc-collections/cfr/.*

IV. Electronic Submissions (E–Filing)

All documents filed in NRC adjudicatory proceedings, including a request for hearing, a petition for leave to intervene, any motion or other document filed in the proceeding prior to the submission of a request for hearing or petition to intervene, and documents filed by interested governmental entities participating under 10 CFR 2.315(c), must be filed in accordance with the NRC E–Filing rule (72 FR 49139, August 28, 2007). The E–Filing process requires participants to submit and serve all adjudicatory documents over the internet, or in some cases to mail copies on electronic storage media. Participants may not submit paper copies of their filings unless they seek an exemption in accordance with the procedures described below.

To comply with the procedural requirements of E–Filing, at least 10 days prior to the filing deadline, the participant should contact the Office of the Secretary by email at *hearing.docket@nrc.gov*, or by telephone at (301) 415–1677, to request (1) a digital identification (ID) certificate, which allows the participant (or its counsel or representative) to digitally sign documents and access the E–Submittal server for any proceeding in which it is participating; and (2) advise the Secretary that the participant will be submitting a request or petition for hearing (even in instances in which the participant, or its counsel or representative, already holds an NRC-issued digital ID certificate). Based upon this information, the Secretary will establish an electronic docket for the hearing in this proceeding if the Secretary has not already established an electronic docket.

Information about applying for a digital ID certificate is available on the NRC's public Web site at *http://www.nrc.gov/site-help/e-submittals/apply-certificates.html*. System requirements for accessing the E–Submittal server are detailed in NRC's ''Guidance for Electronic Submission,'' which is available on the agency's public Web site at *http://www.nrc.gov/site-help/e-submittals.html*. Participants may attempt to use other software not listed on the Web site, but should note that the NRC's E–Filing system does not support unlisted software, and the NRC Meta System Help Desk will not be able to offer assistance in using unlisted software.

If a participant is electronically submitting a document to the NRC in accordance with the E–Filing rule, the participant must file the document using the NRC's online, Web-based submission form. In order to serve documents through the Electronic Information Exchange System, users will be required to install a Web browser plug-in from the NRC Web site. Further information on the Web-based submission form, including the installation of the Web browser plug-in, is available on the NRC's public Web site at *http://www.nrc.gov/site-help/e-submittals.html*.

Once a participant has obtained a digital ID certificate and a docket has been created, the participant can then submit a request for hearing or petition

for leave to intervene. Submissions should be in Portable Document Format (PDF) in accordance with the NRC guidance available on the NRC's public Web site at *http://www.nrc.gov/site-help/e-submittals.html.* A filing is considered complete at the time the documents are submitted through the NRC's E–Filing system. To be timely, an electronic filing must be submitted to the E–Filing system no later than 11:59 p.m. Eastern Time on the due date. Upon receipt of a transmission, the E–Filing system time-stamps the document and sends the submitter an email notice confirming receipt of the document. The E–Filing system also distributes an email notice that provides access to the document to the NRC's Office of the General Counsel and any others who have advised the Office of the Secretary that they wish to participate in the proceeding, so that the filer need not serve the documents on those participants separately. Therefore, applicants and other participants (or their counsel or representative) must apply for and receive a digital ID certificate before a hearing request/petition to intervene is filed so that they can obtain access to the document via the E–Filing system.

A person filing electronically using the agency's adjudicatory E–Filing system may seek assistance by contacting the NRC Meta System Help Desk through the ''Contact Us'' link located on the NRC Web site at *http://www.nrc.gov/site-help/e-submittals.html*, by email at *MSHD.Resource@nrc.gov*, or by a toll-free call at 1–(866) 672–7640. The NRC Meta System Help Desk is available between 8 a.m. and 8 p.m., Eastern Time, Monday through Friday, excluding government holidays.

Participants who believe that they have a good cause for not submitting documents electronically must file an exemption request, in accordance with 10 CFR 2.302(g), with their initial paper filing requesting authorization to continue to submit documents in paper format. Such filings must be submitted by: (1) First class mail addressed to the Office of the Secretary of the Commission, U.S. Nuclear Regulatory Commission, Washington, DC 20555–0001, Attention: Rulemaking and Adjudications Staff; or (2) courier, express mail, or expedited delivery service to the Office of the Secretary, Sixteenth Floor, One White Flint North, 11555 Rockville Pike, Rockville, Maryland, 20852, Attention: Rulemaking and Adjudications Staff. Participants filing a document in this manner are responsible for serving the document on all other participants. Filing is considered complete by first-class mail as of the time of deposit in the mail, or by courier, express mail, or expedited delivery service upon depositing the document with the provider of the service. A presiding officer, having granted an exemption request from using E–Filing, may require a participant or party to use E–Filing if the presiding officer subsequently determines that the reason for granting the exemption from use of E–Filing no longer exists.

Documents submitted in adjudicatory proceedings will appear in NRC's electronic hearing docket which is available to the public at *http://ehd1.nrc.gov/ehd/*, unless excluded pursuant to an order of the Commission, or the presiding officer. Participants are requested not to include personal privacy information, such as social security numbers, home addresses, or home phone numbers in their filings, unless an NRC regulation or other law requires submission of such information. With respect to copyrighted works, except for limited excerpts that serve the purpose of the adjudicatory filings and would constitute a Fair Use application, participants are requested not to include copyrighted materials in their submission.

Petitions for leave to intervene must be filed no later than 20 days from the date of publication of this notice. Non-timely filings will not be entertained absent a determination by the presiding officer that the petition or request should be granted or the contentions should be admitted, based on a balancing of the factors specified in 10 CFR 2.309(c)(1)(i)–(viii).

The Commission will issue a notice or order granting or denying a hearing request or intervention petition, designating the issues for any hearing that will be held and designating the Presiding Officer. A notice granting a hearing will be published in the **Federal Register** and served on the parties to the hearing.

Dated at Rockville, Maryland this 15th day of February 2012.

For the Nuclear Regulatory Commission.

Carleen J. Sanders,

Project Manager, Plant Licensing Branch I–2, Division of Operating Reactor Licensing, Office of Nuclear Reactor Regulation.

[FR Doc. 2012–4559 Filed 2–24–12; 8:45 am]

BILLING CODE 7590–01–P

NUCLEAR REGULATORY COMMISSION

[NRC–2011–0097]

Thermal Overload Protection for Electric Motors on Motor-Operated Valves

AGENCY: Nuclear Regulatory Commission.

ACTION: Regulatory guide; issuance.

SUMMARY: The U.S. Nuclear Regulatory Commission (NRC or Commission) is issuing a revision to Regulatory Guide (RG) 1.106, ''Thermal Overload Protection for Electric Motors on Motor-Operated Valves.'' This regulatory guide describes a method acceptable to NRC's staff for complying with NRC requirements for the application of thermal overload protection devices that are integral with the motor starter for electric motors on motor-operated valves.

ADDRESSES: Please refer to Docket ID NRC–2011–0097 when contacting the NRC about the availability of information regarding this document. You may access information related to this document, which the NRC possesses and is publicly-available, using the following methods:

- *Federal Rulemaking Web site:* Go to *http://www.regulations.gov* and search for Docket ID NRC–2011–0097. Address questions about NRC dockets to Carol Gallagher; telephone: 301–492–3668; email: *Carol.Gallagher@nrc.gov.*
- *NRC's Agencywide Documents Access and Management System (ADAMS):* You may access publicly-available documents online in the NRC Library at *http://www.nrc.gov/reading-rm/adams.html.* To begin the search, select ''ADAMS Public Documents'' and then select ''Begin Web-based ADAMS Search.'' For problems with ADAMS, please contact the NRC's Public Document Room (PDR) Reference staff at 1–800–397–4209, 301–415–4737, or by email to *pdr.resource@nrc.gov.* The ADAMS accession number for each document referenced in this notice (if that document is available in ADAMS) is provided the first time that a document is referenced. The regulatory guide is available electronically under ADAMS Accession Number ML112580358. The regulatory analysis may be found in ADAMS under Accession Number ML120170063.
- *NRC's PDR:* You may examine and purchase copies of public documents at the NRC's PDR, Room O1–F21, One White Flint North, 11555 Rockville Pike, Rockville, Maryland 20852.

Regulatory guides are not copyrighted, and NRC approval is not required to reproduce them.

FOR FURTHER INFORMATION CONTACT: Edward O'Donnell, Regulatory Guide Development Branch, Division of Engineering, Office of Nuclear Regulatory Research, U.S. Nuclear Regulatory Commission, Washington, DC 20555–0001, telephone: 301–251–7455; email: *Edward.ODonnell@nrc.gov.*

SUPPLEMENTARY INFORMATION:

I. Introduction

The NRC is issuing a revision to an existing guide in the NRC's ''Regulatory Guide'' series. This series was developed to describe and make available to the public information such as methods that are acceptable to the NRC staff for implementing specific parts of the agency's regulations, techniques that the staff uses in evaluating specific problems or postulated accidents, and data that the staff needs in its review of applications for permits and licenses.

Revision 2 of RG 1.106 was issued with a temporary identification as Draft Regulatory Guide, DG–1264. This regulatory guide describes a method acceptable to the NRC staff regarding the application of thermal overload protection devices. This method would ensure that the thermal overload protection devices will not needlessly prevent the motor from performing its safety-related function.

II. Further Information

DG–1264, was published in the **Federal Register** on May 02, 2011 (76 FR 24538) for a 60-day public comment period. The public comment period closed on June 28, 2011. The NRC staff's responses to the public comments on DG–1264 are available under ADAMS Accession Number ML112580363.

III. Backfitting and Issue Finality

Issuance of this final regulatory guide does not constitute backfitting as defined in 10 CFR 50.109 (the Backfit Rule) and is not otherwise inconsistent with the issue finality provisions in 10 CFR Part 52. As discussed in the ''Implementation'' discussion of this regulatory guide, the NRC has no current intention to impose this regulatory guide on holders of current operating licenses or combined licenses. Accordingly, the issuance of this regulatory guide does not constitute ''backfitting''' as defined in 10 CFR 50.109(a)(1) or is otherwise inconsistent with the applicable issue finality provisions in 10 CFR Part 52.

This regulatory guide may be applied to applications for operating licenses and combined licenses docketed by the NRC as of the date of issuance of the final regulatory guide, as well as future applications for operating licenses and combined licenses submitted after the issuance of the regulatory guide. Such action does not constitute backfitting as defined in 10 CRF 50.109(a)(1) or is otherwise inconsistent with the applicable issue finality provision in 10 CFR Part 52, inasmuch as such applicants or potential applicants are not within the scope of entities protected by the Backfit Rule or the relevant issue finality provisions in 10 CFR Part 52.

Dated at Rockville, Maryland, this 17th day of February 2012.

For the Nuclear Regulatory Commission.

Mark P. Orr,

Acting Chief, Regulatory Guide Development Branch, Division of Engineering, Office of Nuclear Regulatory Research.

[FR Doc. 2012–4552 Filed 2–24–12; 8:45 am]

BILLING CODE 7590–01–P

OFFICE OF PERSONNEL MANAGEMENT

January 2012 Pay Schedules

AGENCY: U.S. Office of Personnel Management.

ACTION: Notice.

SUMMARY: The President has signed an Executive order containing the 2012 pay schedules for certain Federal civilian employees. The rates of pay for these employees will not be increased in 2012 and remain at 2010/2011 levels, except for employees in nonforeign areas. This notice serves as documentation for the public record.

FOR FURTHER INFORMATION CONTACT: Lisa Dismond, Pay and Leave, Employee Services, U.S. Office of Personnel Management; (202) 606–2858; Fax (202) 606–0824; or email to *pay-leave-policy@opm.gov*

SUPPLEMENTARY INFORMATION: On December 19, 2011, the President signed Executive Order 13594 (76 FR 80191), which documented the January 2012 pay schedules. Pursuant to Public Law 111–242, as amended by Public Law 111–322 (December 22, 2010), the Executive order provides that the 2012 pay rates for most civilian employee pay schedules covered by the order are not adjusted and remain at 2010/2011 levels. Schedule 1 of Executive Order 13594 provides the rates for the 2012 General Schedule (GS) and reflects no increase from 2010/2011. Executive Order 13594 also includes the percentage amounts of the 2012 locality payments, which remain at 2010/2011 levels except for employees in nonforeign areas. (See Section 5 and Schedule 9 of Executive Order 13594.)

The publication of this notice satisfies the requirement in section 5(b) of Executive Order 13594 that the U.S. Office of Personnel Management (OPM) publish appropriate notice of the 2012 locality payments in the **Federal Register**.

GS employees receive locality payments under 5 U.S.C. 5304. Locality payments apply in the United States (as defined in 5 U.S.C. 5921(4)) and its territories and possessions. In 2012, locality payments ranging from 14.16 percent to 35.15 percent apply to GS employees in the 34 locality pay areas. The 2012 locality pay area definitions can be found at *http://www.opm.gov/oca/12tables/locdef.asp.*

The 2012 locality pay percentages became effective on the first day of the first pay period beginning on or after January 1, 2012 (January 1, 2012). An employee's locality rate of pay is computed by increasing his or her scheduled annual rate of pay (as defined in 5 CFR 531.602) by the applicable locality pay percentage. (See 5 CFR 531.604 and 531.609.) As provided under the Nonforeign Area Retirement Equity Assurance Act of 2009 (subtitle B of title XIX of the National Defense Authorization Act for Fiscal Year 2010 (Pub. L. 111–84, October 28, 2009)), the locality rate for each nonforeign area will be set at the full applicable locality rate in January 2012. Employees in nonforeign areas entitled to cost-of-living allowances (COLAs) (i.e., Alaska, Hawaii, and other nonforeign areas as defined in 5 CFR 591.207) have corresponding reductions in their COLAs when locality rates increase.

Executive Order 13594 documents that the Executive Schedule rates of pay remain at the 2010/2011 levels. By law, Executive Schedule officials are not authorized to receive locality payments.

Executive Order 13594 documents the 2012 range of rates of basic pay for members of the Senior Executive Service (SES) under 5 U.S.C. 5382. The minimum rate of basic pay for the SES remains at $119,554 in 2012. The maximum rate of the SES rate range continues to be $179,700 (level II of the Executive Schedule) for SES members covered by a certified SES performance appraisal system and $165,300 (level III of the Executive Schedule) for SES members covered by an SES performance appraisal system that has not been certified.

The minimum rate of basic pay for the senior-level (SL) and scientific and professional (ST) rate range remains at

$119,554 in 2012. The applicable maximum rate of the SL/ST rate range continues to be $179,700 (level II of the Executive Schedule) for SL or ST employees covered by a certified SL/ST performance appraisal system and $165,300 (level III of the Executive Schedule) for SL or ST employees covered by an SL/ST performance appraisal system that has not been certified. Agencies with certified performance appraisal systems in 2012 for SES members and employees in SL and ST positions also must apply a higher aggregate limitation on pay—up to the Vice President's salary ($230,700 in 2012, the same level as in 2010/2011).

Executive Order 13594 provides that the rates of basic pay for administrative law judges (ALJs) under 5 U.S.C. 5372 are not increased in 2012. The rate of basic pay for AL–1 remains at $155,500 (equivalent to the rate for level IV of the Executive Schedule). The rate of basic pay for AL–2 remains at $151,800. The rates of basic pay for AL–3/A through 3/F continue to range from $103,900 to $143,700.

The rates of basic pay for members of Contract Appeals Boards are calculated as a percentage of the rate for level IV of the Executive Schedule. (See 5 U.S.C. 5372a.) Therefore, these rates of basic pay are not increased in 2012.

On October 28, 2011, the Director of OPM issued a memorandum on behalf of the President's Pay Agent (the Secretary of Labor and the Directors of the Office of Management and Budget (OMB) and OPM) that continues GS locality payments for ALJs and certain other non-GS employee categories in 2012. By law, officials paid under the Executive Schedule, SES members, employees in SL/ST positions, and employees in certain other equivalent pay systems are not authorized to receive locality payments. (**Note:** An exception applies to certain grandfathered SES, SL, and ST employees stationed in a nonforeign area on January 2, 2010.) Except for employees in nonforeign areas, the locality payments continued for non-GS employees have not been increased in 2012. The memo is available at *http://www.opm.gov/flsa/oca/11tables/Extend_2012.pdf*.

On December 21, 2011, OPM issued a memorandum (CPM 2011–21) on the Executive order for the 2012 pay schedules. (See *http://www.opm.gov/oca/compmemo/index.asp*.) The memorandum transmitted Executive Order 13594 and provided the 2012 salary tables, locality pay areas and percentages, and information on general pay administration matters and other related information. The ''2012 Salary Tables'' posted on OPM's Web site at *www.opm.gov/oca/12tables/index.asp* are the official rates of pay for affected employees and are hereby incorporated as part of this notice.

U.S. Office of Personnel Management.

John Berry,

Director.

[FR Doc. 2012–4544 Filed 2–24–12; 8:45 am]

BILLING CODE 6325–39–P

OFFICE OF PERSONNEL MANAGEMENT

National Council on Federal Labor-Management Relations Meeting

AGENCY: Office of Personnel Management.

ACTION: Notice of meeting.

SUMMARY: The National Council on Federal Labor-Management Relations plans to meet on the following dates—

Wednesday, April 18, 2012.
Wednesday, May 16, 2012.
Wednesday, June 20, 2012.
Wednesday, July 18, 2012.
Wednesday, September 19, 2012.
Wednesday, October 17, 2012.
Wednesday, November 28, 2012.

The meetings will start at 10 a.m. and will be held in Room 1350, U.S. Office of Personnel Management, 1900 E Street, NW., Washington, DC, 20415. Interested parties should consult the Council Web site at *www.lmrcouncil.gov* for the latest information on Council activities, including changes in meeting dates.

The Council is an advisory body composed of representatives of Federal employee organizations, Federal management organizations, and senior government officials. The Council was established by Executive Order 13522, entitled, ''Creating Labor-Management Forums to Improve Delivery of Government Services,'' which was signed by the President on December 9, 2009. Along with its other responsibilities, the Council assists in the implementation of Labor Management Forums throughout the government and makes recommendations to the President on innovative ways to improve delivery of services and products to the public while cutting costs and advancing employee interests. The Council is co-chaired by the Director of the Office of Personnel Management and the Deputy Director for Management of the Office of Management and Budget.

At its meetings, the Council will continue its work in promoting cooperative and productive relationships between labor and management in the executive branch, by carrying out the responsibilities and functions listed in Section 1(b) of the Executive Order. The meetings are open to the public. Please contact the Office of Personnel Management at the address shown below if you wish to present material to the Council at the meeting. The manner and time prescribed for presentations may be limited, depending upon the number of parties that express interest in presenting information.

FOR FURTHER INFORMATION CONTACT: Tim Curry, Deputy Associate Director for Partnership and Labor Relations, Office of Personnel Management, 1900 E Street NW., Room 7H28–E, Washington, DC 20415. Phone (202) 606–2930 or email at *PLR@opm.gov*.

For the National Council.

John Berry,

Director.

[FR Doc. 2012–4540 Filed 2–24–12; 8:45 am]

BILLING CODE 6325–39–P

RAILROAD RETIREMENT BOARD

Agency Forms Submitted for OMB Review, Request for Comments

SUMMARY: In accordance with the Paperwork Reduction Act of 1995 (44 U.S.C. Chapter 35), the Railroad Retirement Board (RRB) is forwarding an Information Collection Request (ICR) to the Office of Information and Regulatory Affairs (OIRA), Office of Management and Budget (OMB). Our ICR describes the information we seek to collect from the public. Review and approval by OIRA ensures that we impose appropriate paperwork burdens.

The RRB invites comments on the proposed collection of information to determine (1) the practical utility of the collection; (2) the accuracy of the estimated burden of the collection; (3) ways to enhance the quality, utility, and clarity of the information that is the subject of collection; and (4) ways to minimize the burden of collections on respondents, including the use of automated collection techniques or other forms of information technology. Comments to the RRB or OIRA must contain the OMB control number of the ICR. For proper consideration of your comments, it is best if the RRB and OIRA receive them within 30 days of the publication date.

Under Section 2 of the Railroad Retirement Act, an annuity is not payable or is reduced for any month in which the annuitant works for a railroad

or earns more than prescribed dollar amounts from either non-railroad employment or self-employment. Certain types of work may indicate an annuitant's recovery from disability. The provisions relating to the reduction or non-payment of an annuity by reason of work, and an annuitant's recovery from disability for work, are prescribed in 20 CFR 220.17–220.20. The RRB conducts continuing disability reviews (CDR) to determine whether an annuitant continues to meet the disability requirements of the law. Provisions relating to when and how often the RRB conducts CDRs are prescribed in 20 CFR 220.186.

Form G–254, Continuing Disability Report, is used by the RRB to develop information for a CDR determination, including a determination prompted by a report of work, return to railroad service, allegation of medical improvement, or a routine disability review call-up.

Form G–254a, Continuing Disability Update Report, is used to help identify a disability annuitant whose work activity and/or recent medical history warrants completion of Form G–254 for a more extensive review.

Completion is required to retain a benefit. One response is requested of each respondent to Forms G–254 and G–254a.

Previous Requests for Comments: The RRB has already published the initial 60-day notice (76 FR 80988 on December 27, 2011) required by 44 U.S.C. 3506(c)(2). That request elicited no comments.

Information Collection Request (ICR)

Title: Continuing Disability Report.

OMB Control Number: 3220–0187.

Forms submitted: G–254 and G–254a.

Type of request: Revision of a currently approved collection.

Affected public: Individuals or Households.

Abstract: Under the Railroad Retirement Act, a disability annuity can be reduced or not paid, depending on the amount of earnings and type of work performed. The collection obtains information about a disabled annuitant's employment and earnings.

Changes proposed: The RRB proposes non-burden impacting editorial and formatting changes to Form G–254 and revision of Form G–254a to include a request for the applicant's daytime telephone number to resolve any ambiguous issues.

The burden estimate for the ICR is as follows:

Form No.	Annual responses	Time (minutes)	Burden (hours)
G–254	1,500	5–35	623
G–254a	1,500	5	125
Total	3,000		748

Additional Information or Comments: Copies of the forms and supporting documents can be obtained from Dana Hickman at (312) 751–4981 or *Dana.Hickman@RRB.GOV.*

Comments regarding the information collection should be addressed to Charles Mierzwa, Railroad Retirement Board, 844 North Rush Street, Chicago, Illinois 60611–2092 or *Charles.Mierzwa@RRB.GOV* and to the OMB Desk Officer for the RRB, Fax: 202–395–6974, Email address: *OIRA_Submission@omb.eop.gov.*

Charles Mierzwa,

Chief of Information Resources Management.

[FR Doc. 2012–4455 Filed 2–24–12; 8:45 am]

BILLING CODE 7905–01–P

SECURITIES AND EXCHANGE COMMISSION

Proposed Collection; Comment Request

Upon Written Request, Copies Available From: Securities and Exchange Commission, Office of Investor Education and Advocacy, Washington, DC 20549–0213.

Extension:

Mutual Fund Interactive Data; SEC File No. 270–580; OMB Control No. 3235–0642.

Notice is hereby given that, pursuant to the Paperwork Reduction Act of 1995 (44 U.S.C. 3501 *et seq.*), the Securities and Exchange Commission (the ''Commission'') is soliciting comments on the collection of information summarized below. The Commission plans to submit this existing collection of information to the Office of Management and Budget (''OMB'') for extension and approval.

Open-end management investment companies (''funds'') are required to submit to the Commission information included in their registration statements, or information included in or amended by post-effective amendments thereto, in response to Items 2, 3, and 4 (''risk/return summary information'') of Form N–1A (17 CFR 239.15A and 274.11A) in interactive data format and to post it on their Web sites, if any, in interactive data form. In addition, funds are required to submit an interactive data file to the Commission for any form of prospectus filed pursuant to rule 497(c) or (e) (17 CFR 230.497) under the Securities Act of 1933 (15 U.S.C. 77a *et seq.*) that includes risk/return summary information that varies from the registration statement and to post the interactive data file on their Web sites, if any.

The title for the collection of information for submitting risk/return summary information in interactive data format is ''Mutual Fund Interactive Data.'' This collection of information relates to regulations and forms adopted under the Securities Act, the Securities Exchange Act of 1934 (15 U.S.C. 78a *et seq.*), and the Investment Company Act of 1940 (15 U.S.C. 80a–1 *et seq.*) that set forth disclosure requirements for funds and other issuers. The purpose of the Mutual Fund Interactive Data requirements is to make risk/return summary information easier for investors to analyze and to assist in automating regulatory filings and business information processing.

Funds are required to file an initial registration statement on Form N–1A and to update that registration statement annually. The Commission estimates that each fund will submit one interactive data document as an exhibit to a registration statement or a post-effective amendment thereto on Form N–1A that includes or amends information provided in response to Items 2, 3 or 4 annually. In addition, based on a review by Commission staff of Mutual Fund Interactive Data submissions in calendar year 2011, the Commission estimates that 33% of funds will provide risk/return summary information as interactive data in additional filings submitted pursuant to rule 485(b) (17 CFR 230.485(b)) or rule 497 under the Securities Act annually.

The Commission estimates that the total annual hour burden associated with tagging risk/return summary information is approximately 11 hours. Based on estimates of 9,800 funds each submitting one interactive data document as an exhibit to a registration

statement or post-effective amendment thereto and 3,200 funds submitting an additional interactive data document as an exhibit to a filing pursuant to rule 485(b) or rule 497, each incurring 11 hours per year on average, the Commission estimates that, in the aggregate, the tagging of risk/return summary information will result in approximately 143,000 annual burden hours. In addition, the Commission estimates that funds will require an average of approximately one burden hour to post interactive data to their Web sites. Based on estimates of 9,800 funds each posting one interactive data document as an exhibit to a registration statement or post-effective amendment thereto and 3,200 funds posting an additional interactive data document as an exhibit to a filing pursuant to rule 485(b) or rule 497, each incurring one burden hour per year on average, the Commission estimates that, in the aggregate, Mutual Fund Interactive Data Web site posting requirements will result in approximately 13,000 annual burden hours.

The Commission estimates that the average cost burden per fund is $841 per year. Based on the estimate of 9,800 funds using software and/or consulting services at an annual cost of $841, the Commission estimates that, in the aggregate, the total external costs to the industry will be approximately $8.2 million.

Estimates of average burden hours are made solely for the purposes of the Paperwork Reduction Act and are not derived from a comprehensive or even representative survey or study of the costs of Commission rules and forms.

The collection of information under the Mutual Fund Interactive Data requirements is mandatory for all funds. Responses to the disclosure requirements will not be kept confidential. An agency may not conduct or sponsor, and a person is not required to respond to, a collection of information unless it displays a currently valid OMB control number.

Written comments are invited on: (a) Whether the proposed collection of information is necessary for the proper performance of the functions of the agency, including whether the information will have practical utility; (b) the accuracy of the agency's estimate of the burden of the collection of information; (c) ways to enhance the quality, utility, and clarity of the information collected; and (d) ways to minimize the burden of the collection of information on respondents, including through the use of automated collection techniques or other forms of information technology. Consideration will be given to comments and suggestions submitted in writing within 60 days of this publication.

Please direct your written comments to Thomas Bayer, Director/Chief Information Officer, Securities and Exchange Commission, c/o Remi Pavlik-Simon, 6432 General Green Way, Alexandria, VA 22312; or send an email to: *PRA_Mailbox@sec.gov.*

Dated: February 21, 2012.

Kevin M. O'Neill,

Deputy Secretary.

[FR Doc. 2012–4422 Filed 2–24–12; 8:45 am]

BILLING CODE 8011–01–P

SECURITIES AND EXCHANGE COMMISSION

[Release No. 34–66428; File No. SR–NASDAQ–2012–028]

Self-Regulatory Organizations; The NASDAQ Stock Market LLC; Notice of Filing and Immediate Effectiveness of Proposed Rule Change To Modify NASDAQ Connectivity Options and Fees

February 21, 2012.

Pursuant to Section 19(b)(1) of the Securities Exchange Act of 1934 (''Act''),[1] and Rule 19b–4 thereunder,[2] notice is hereby given that on February 13, 2012, The NASDAQ Stock Market LLC (''NASDAQ'' or ''Exchange'') filed with the Securities and Exchange Commission (''Commission'') the proposed rule change as described in Items I and II below, which Items have been prepared by the Exchange. The Commission is publishing this notice to solicit comments on the proposed rule change from interested persons.

I. Self-Regulatory Organization's Statement of the Terms of the Substance of the Proposed Rule Change

The Exchange proposes to modify NASDAQ connectivity options and fees. The text of the proposed rule change is available at *http://nasdaq.cchwallstreet.com/,* at the Exchange's principal office, and at the Commission's Public Reference Room.

II. Self-Regulatory Organization's Statement of the Purpose of, and Statutory Basis for, the Proposed Rule Change

In its filing with the Commission, the Exchange included statements concerning the purpose of and basis for the proposed rule change and discussed any comments it received on the proposed rule change. The text of these statements may be examined at the places specified in Item IV below. The Exchange has prepared summaries, set forth in Sections A, B, and C below, of the most significant aspects of such statements.

A. Self-Regulatory Organization's Statement of the Purpose of, and the Statutory Basis for, the Proposed Rule Change

1. Purpose

The Exchange proposes to modify Rule 7034(b) regarding connectivity to NASDAQ. Specifically, the Exchange proposes to (i) establish a connectivity fee for a 40Gb enhanced bandwidth option; and (ii) provide a waiver of installation fees for upgrades.

Enhanced Bandwidth Option

The Exchange currently offers various bandwidth options for connectivity to NASDAQ, including a 10Gb fiber connection, a 1Gb copper connection, and a 100 MB connection.[3] In keeping with changes in technology, the Exchange now proposes to provide an enhanced bandwidth option to enable its clients a more efficient connection to the Exchange. The Exchange proposes a 40G [sic] fiber connection with a one-time installation fee of $1,500, and a per-month connectivity fee of $15,000. The growth in the size of consolidated and proprietary data feeds has resulted in demand for higher bandwidth. As the number of feeds available and the size of the feeds increases, the bandwidth required for market data feeds steadily rises. The Exchange's proposal provides the co-located client the option to select the bandwidth that is appropriate for the firm's current needs and enables it to add or change services as its needs change.

Waiver of Installation Fees

The Exchange also proposes to provide a waiver of the installation fees for client orders of 10Gb and 40Gb fiber connectivity to NASDAQ completed between the effectiveness of this proposal and May 31, 2012. The Exchange is providing the waiver to assist its co-located clients in upgrading to higher bandwidth connections to meet the growing needs of co-located clients' business operations.

2. Statutory Basis

The Exchange believes that its proposal is consistent with Section 6(b) of the Act[4] in general, and with Section

---

[1] 15 U.S.C. 78s(b)(1).

[2] 17 CFR 240.19b–4.

[3] *See* Exchange Rule 7034(b), Connectivity to Nasdaq. All co-location services are provided by NASDAQ Technology Services LLC.

[4] 15 U.S.C. 78f(b).

6(b)(4) of the Act,[5] in particular, in that it provides for the equitable allocation of reasonable dues, fees and other charges among members and issuers and other persons using any facility or system which the Exchange operates or controls. The Exchange also believes the proposal furthers the objectives of Section 6(b)(5) of the Act[6] in that it is designed to promote just and equitable principles of trade, to remove impediments to and perfect the mechanism of a free and open market and a national market system, and, in general to protect investors and the public interest and are [sic] not designed to permit unfair discrimination between customer, issuers, brokers and dealers.

Enhanced Bandwidth Option

The Exchange believes that its proposal is consistent with Section 6(b)(4) of the Act in that it provides for the equitable allocation of reasonable dues, fees and other charges among members and issuers and other persons using any facility or system which the Exchange operates or controls.

Reasonable Fees

The Exchange's proposal for 40Gb fiber connectivity will provide co-location clients the ability to increase data transmission and reduce latency, thereby enhancing their operations. The Exchange believes the proposed fees for 40B [sic] fiber connectivity to NASDAQ are reasonable because the fees charged for the higher bandwidth allow the Exchange to cover the hardware, installation, testing and connection costs to maintain and manage the enhanced connection. The proposed fees allow the Exchange to recoup costs associated with providing the 40Gb connection and provide the Exchange a profit while providing customers the possibility of reducing the number of their connections to the Exchange. While no other Exchange currently offers the proposed 40Gb bandwidth connection, the Exchange further believes that the proposed fees are reasonable in that the proposed fees are proportionately less than the fees charged by other trading venues for similar connectivity services.[7]

Equitable Allocation

The Exchange also believes the proposed 40Gb fiber fee for connectivity to NASDAQ is equitably allocated in that all Exchange members that voluntarily select this service option will be charged the same amount to cover the hardware, installation, testing and connection costs to maintain and manage the enhanced connection. The proposed fees allow the Exchange to recoup costs associated with providing the 40Gb connection and provide the Exchange a profit while providing customers the possibility of reducing the number of their connections to the Exchange. All Exchange members have the option to select this voluntary co-location service.

The Exchange also believes the proposal furthers the objectives of Section 6(b)(5) of the Act[8] in that it is designed to promote just and equitable principles of trade, to remove impediments to and perfect the mechanism of a free and open market and a national market system, and, in general to protect investors and the public interest and are [sic] not designed to permit unfair discrimination between customer, issuers, brokers and dealers.

Removes Impediments and Perfects Mechanism of a Free and Open Market

Furthermore, the enhanced 40Gb fiber connectivity assists the co-located clients in making their network connectivity more efficient, as clients could consolidate the number of connections to NASDAQ. Due to the continuous growth of the size of consolidated and proprietary market data feeds transmitted over the NASDAQ connections, clients need to monitor their connections for data spikes and data gapping issues which can result in potential trading errors, trading losses and may require network resource intervention to resolve. The Exchange believes the enhanced 40Gb connection will remove impediments to and perfect the mechanism of a free and open market and a national market system because the enhanced connectivity option will remove the potential for data spikes and data gapping issues that result from the transmission of the growing size of the consolidated and proprietary market data feeds.

Protects Investors and the Public Interest

The Exchange also believes that the reduction in latencies attributed to the enhanced 40Gb connection option further serves to protect investors and the public interest. The reduction in latencies will remove the potential for data spikes and data gapping issues that result from the transmission of the growing size of the consolidated and proprietary market data feeds. Such data spiking and data gapping issues have the potential of disrupting the marketplace which could negatively impact the investors as well as the public interest.

Not Unfairly Discriminatory

The Exchange also believes the proposed 40Gb fiber fee for connectivity to NASDAQ is not unfairly discriminatory in that all NASDAQ members have the option of selecting the 40Gb connection to NASDAQ, and there is no differentiation among members with regard to the fees charged for this option. Furthermore, the Exchange believes the [sic] providing all NASDAQ Members the proposed connectivity option for the proposed fees, which covers the hardware, installation, testing and connection costs to maintain and manage the enhanced connection, promotes just and equitable principles of trade.

Waiver of Installation Fees

The Exchange believes that its proposal for the waiver of installation fees is consistent with Section 6(b) of the Act[9] in general, and with Section 6(b)(4) of the Act,[10] in particular, in that it provides for the equitable allocation of reasonable dues, fees and other charges among members and issuers and other persons using any facility or system which the Exchange operates or controls.

Reasonable Waiver of Fees

The Exchange believes that its proposal to waive the 10Gb and 40Gb fiber connection installation fees is reasonable because it is being provided to assist its co-located clients in upgrading to higher bandwidth connections to meet the growing needs of the co-located clients' business operations at a time in the industry when the ever-increasing size of consolidated and proprietary data fees are [sic] causing higher demand for larger bandwidth options to reduce potential disruption in the marketplace.

Equitably Allocated

The Exchange also believes the proposal to waive the 10Gb and 40Gb fiber connection installation fee is equitably allocated in that all Exchange

[5] 15 U.S.C. 78f(b)(4).

[6] 15 U.S.C. 78f(b)(5).

[7] NYSE charges $10,000 per month for 10Gb LCN (Liquidity Center Network) Connection. *See https://usequities.nyx.com/sites/usequities.nyx.com/files/nyse_arca_marketplace_fees_1.3.2012.pdf,* page 13. Furthermore, ISE charges $4,000 per month for 10Gb Ethernet network connections. *See http://www.ise.com/assets/documents/OptionsExchange/legal/fee/fee_schedule.pdf,* page 9. By contrast, NASDAQ is proposing to offer four times the bandwidth for a monthly fee of $15,000.

[8] 15 U.S.C. 78f(b)(5).

[9] 15 U.S.C. 78f(b).

[10] 15 U.S.C. 78f(b)(4).

members that voluntarily select these service options will be afforded the waiver of fees until May 31, 2012. All Exchange members have the option to select these voluntary co-location services.

Not Unfairly Discriminatory

The Exchange also believes the proposal to waive the 10Gb and 40Gb fiber connection installation fee is not unfairly discriminatory in that the waiver of fees is provided to all NASDAQ members that volunteer for these particular service options, and there is no differentiation among members with regard to the waiver of fees for these options.

B. Self-Regulatory Organization's Statement on Burden on Competition

The Exchange does not believe that the proposed rule change will result in any burden on competition that is not necessary or appropriate in furtherance of the purposes of the Act, as amended.

C. Self-Regulatory Organization's Statement on Comments on the Proposed Rule Change Received From Members, Participants, or Others

Written comments were neither solicited nor received.

III. Date of Effectiveness of the Proposed Rule Change and Timing for Commission Action

Because the foregoing proposed rule change does not significantly affect the protection of investors or the public interest, does not impose any significant burden on competition, and, by its terms, does not become operative for 30 days from the date on which it was filed, or such shorter time as the Commission may designate, it has become effective pursuant to Section 19(b)(3)(A) of the Act [11] and Rule 19b–4(f)(6) thereunder.[12]

The Exchange has requested that the Commission waive the 30-day operative delay. The Commission believes that waiver of the operative delay is consistent with the protection of investors and the public interest because such waiver will facilitate trading activities by providing members an option to enhance the efficiency of their trading through the 40Gb connectivity. Therefore, the Commission designates the proposal operative upon filing.[13]

At any time within 60 days of the filing of the proposed rule change, the Commission summarily may temporarily suspend such rule change if it appears to the Commission that such action is necessary or appropriate in the public interest, for the protection of investors, or otherwise in furtherance of the purposes of the Act.

IV. Solicitation of Comments

Interested persons are invited to submit written data, views, and arguments concerning the foregoing, including whether the proposed rule change is consistent with the Act. Comments may be submitted by any of the following methods:

Electronic Comments

- Use the Commission's Internet comment form (*http://www.sec.gov/rules/sro.shtml*); or
- Send an email to *rule-comments@sec.gov.* Please include File Number SR–NASDAQ–2012–028 on the subject line.

Paper Comments

- Send paper comments in triplicate to Elizabeth M. Murphy, Secretary, Securities and Exchange Commission, 100 F Street NE., Washington, DC 20549–1090.

All submissions should refer to File Number SR–NASDAQ–2012–028. This file number should be included on the subject line if email is used.

To help the Commission process and review your comments more efficiently, please use only one method. The Commission will post all comments on the Commission's Internet Web site (*http://www.sec.gov/rules/sro.shtml).* Copies of the submission, all subsequent amendments, all written statements with respect to the proposed rule change that are filed with the Commission, and all written communications relating to the proposed rule change between the Commission and any person, other than those that may be withheld from the public in accordance with the provisions of 5 U.S.C. 552, will be available for Web site viewing and printing in the Commission's Public Reference Room, 100 F Street NE., Washington, DC 20549, on official business days between the hours of 10 a.m. and 3 p.m. Copies of such filing also will be available for inspection and copying at the principal office of the Exchange. All comments received will be posted without change; the Commission does not edit personal identifying information from submissions. You should submit only information that you wish to make publicly available. All submissions should refer to File Number SR–NASDAQ–2012–028, and should be submitted on or before March 19, 2012.

For the Commission, by the Division of Trading and Markets, pursuant to delegated authority.[14]

Kevin M. O'Neill,

Deputy Secretary.

[FR Doc. 2012–4479 Filed 2–24–12; 8:45 am]

BILLING CODE 8011–01–P

[11] 15 U.S.C. 78s(b)(3)(A).

[12] 17 CFR 240.19b–4(f)(6). In addition, Rule 19b–4(f)(6)(iii) requires the Exchange to give the Commission written notice of the Exchange's intent to file the proposed rule change, along with a brief description and text of the proposed rule change, at least five business days prior to the date of filing of the proposed rule change, or such shorter time as designated by the Commission. The Exchange has satisfied this requirement.

[13] For purposes only of waiving the 30-day operative delay, the Commission has considered the proposed rule's impact on efficiency, competition, and capital formation. *See* 15 U.S.C. 78c(f).

[14] 17 CFR 200.30–3(a)(12).

SECURITIES AND EXCHANGE COMMISSION

[Release No. 34–66431; File No. SR–NASDAQ–2012–026]

Self-Regulatory Organizations; NASDAQ Stock Market LLC; Notice of Filing and Immediate Effectiveness of Proposed Rule Change Relating to Listing of Strike Prices

February 21, 2012.

Pursuant to Section 19(b)(1) of the Securities Exchange Act of 1934 (''Act'') [1] and Rule 19b–4 thereunder,[2] notice is hereby given that, on February 13, 2012, The NASDAQ Stock Market LLC (''NASDAQ'' or the ''Exchange'') filed with the Securities and Exchange Commission (the ''Commission'') the proposed rule change as described in Items I and II below, which Items have been prepared by the Exchange. The Exchange has designated the proposed rule change as constituting a non-controversial rule change under Rule 19b–4(f)(6) under the Act,[3] which renders the proposal effective upon filing with the Commission. The Commission is publishing this notice to solicit comments on the proposed rule change from interested persons.

I. Self-Regulatory Organization's Statement of the Terms of Substance of the Proposed Rule Change

The NASDAQ Stock Market LLC proposes to amend Chapter IV, Section 6 (Series of Options Open for Trading) to permit the listing of strike prices in $0.50 intervals where the strike price is less than $75, and of strike prices in $1.00 intervals where the strike price is

[1] 15 U.S.C. 78s(b)(1).

[2] 17 CFR 240.19b–4.

[3] 17 CFR 240.19b–4(f)(6).

between $75 and $150 for option series used to calculate volatility indexes.

The text of the proposed rule change is available on the Exchange's Web site at *http://www.nasdaq.cchwallstreet.com*, at the principal office of the Exchange, and at the Commission's Public Reference Room.

II. Self-Regulatory Organization's Statement of the Purpose of, and Statutory Basis for, the Proposed Rule Change

In its filing with the Commission, the Exchange included statements concerning the purpose of and basis for the proposed rule change. The text of these statements may be examined at the places specified in Item IV below. The Exchange has prepared summaries, set forth in sections A, B, and C below, of the most significant aspects of such statements.

A. Self-Regulatory Organization's Statement of the Purpose of, and Statutory Basis for, the Proposed Rule Change

1. Purpose

The purpose of this filing is to amend Chapter IV, Section 6 to permit the listing of strike prices in $0.50 intervals where the strike price is less than $75, and of strike prices in $1.00 intervals where the strike price is between $75 and $150 for option series used to calculate volatility indexes.

The proposal permits the listing of strike prices in $0.50 intervals and $1.00 intervals within specified strike price ranges for option series used to calculate volatility indexes. Volatility indexes are calculated and disseminated by the Chicago Board Options Exchange (''CBOE''), which also lists options on the resulting index.[4] At this time, the Exchange has no intention of listing volatility options or selecting options on any equity securities, Exchange-Traded Fund Shares, Trust Issued Receipts, Exchange Traded Notes, Index-Linked Securities, or indexes to be the basis of a volatility index. To the extent that CBOE or another exchange selects a multiply-listed product as the basis of a volatility index, proposed Chapter IV, Section 6 would permit the Exchange to list and compete in all series listed by the CBOE or another Exchange for purposes of calculating a volatility index.

The Exchange has analyzed its capacity and represents that it believes the Exchange and the Options Price Reporting Authority (''OPRA'') have the necessary systems capacity to handle the additional traffic associated with the listing of strike prices in $0.50 intervals where the strike price is less than $75, and strike prices in $1.00 intervals where the strike price is between $75 and $150 for option series used to calculate volatility indexes in securities selected by the CBOE or another exchange.

2. Statutory Basis

The Exchange believes that its proposal is consistent with Section 6(b) of the Act[5] in general, and furthers the objectives of Section 6(b)(5) of the Act[6] in particular, in that it is designed to prevent fraudulent and manipulative acts and practices, to promote just and equitable principles of trade, to foster cooperation and coordination with persons engaged in facilitating transactions in securities, and to remove impediments to and perfect the mechanisms of a free and open market and a national market system, by allowing the Exchange to offer a full range of all available option series in a given class, including those selected by other exchanges to be the basis of a volatility index.

While this proposal may potentially generate additional quote traffic, the Exchange does not believe that this increased traffic will become unmanageable since the proposal is restricted to a limited number of classes. Further, the Exchange does not believe that the proposal will result in a material proliferation of additional series because it is restricted to a limited number of classes.

B. Self-Regulatory Organization's Statement on Burden on Competition

The Exchange does not believe that the proposed rule change will impose any burden on competition not necessary or appropriate in furtherance of the purposes of the Act.

C. Self-Regulatory Organization's Statement on Comments on the Proposed Rule Change Received From Members, Participants, or Others

No written comments were either solicited or received.

III. Date of Effectiveness of the Proposed Rule Change and Timing for Commission Action

Because the foregoing proposed rule change does not significantly affect the protection of investors or the public interest, does not impose any significant burden on competition, and, by its terms, does not become operative for 30 days from the date on which it was filed, or such shorter time as the Commission may designate, it has become effective pursuant to Section 19(b)(3)(A) of the Act[7] and Rule 19b–4(f)(6) thereunder.[8]

The Exchange has requested that the Commission waive the 30-day operative delay. The Commission believes that waiver of the operative delay is consistent with the protection of investors and the public interest because the proposal is substantially similar to those of another exchange that has been approved by the Commission that permits such exchange to allow trading for options series used to calculate volatility indexes at $0.50 strike price intervals where the strike price is less than $75 and at $1.00 intervals where the strike price is between $75 and $150 for options series.[9] Therefore, the Commission designates the proposal operative upon filing.[10]

At any time within 60 days of the filing of the proposed rule change, the Commission summarily may temporarily suspend such rule change if it appears to the Commission that such action is necessary or appropriate in the public interest, for the protection of investors, or otherwise in furtherance of the purposes of the Act.

IV. Solicitation of Comments

Interested persons are invited to submit written data, views, and arguments concerning the foregoing, including whether the proposed rule change is consistent with the Act. Comments may be submitted by any of the following methods:

[4] For example, CBOE calculates the CBOE Gold ETF Volatility Index (''GVZ''), which is based on the VIX methodology applied to options on the SPDR Gold Trust (''GLD''). The current filing would permit $0.50 strike price intervals for GLD options where the strike price is $ 75 or less. The Exchange is currently permitted to list strike prices in $1 intervals for GLD options (where the strike price is $200 or less), as well as for other exchange-traded fund (''ETF'') options. *See* Chapter IV, Section 6.

[5] 15 U.S.C. 78f(b).

[6] 15 U.S.C. 78f(b)(5).

[7] 15 U.S.C. 78s(b)(3)(A).

[8] 17 CFR 240.19b–4(f)(6). In addition, Rule 19b–4(f)(6)(iii) requires the Exchange to give the Commission written notice of the Exchange's intent to file the proposed rule change, along with a brief description and text of the proposed rule change, at least five business days prior to the date of filing of the proposed rule change, or such shorter time as designated by the Commission. The Exchange has satisfied this requirement.

[9] *See* Securities Exchange Act Release No. 64189 (April 5, 2011), 76 FR 20066 (April 11, 2011) (SR–CBOE–2011–008).

[10] For purposes only of waiving the 30-day operative delay, the Commission has considered the proposed rule's impact on efficiency, competition, and capital formation. *See* 15 U.S.C. 78c(f).

Electronic Comments

- Use the Commission's Internet comment form (*http://www.sec.gov/rules/sro.shtml*); or
- Send an email to *rule-comments@sec.gov.* Please include File Number SR–NASDAQ–2012–026 on the subject line.

Paper Comments

- Send paper comments in triplicate to Elizabeth M. Murphy, Secretary, Securities and Exchange Commission, 100 F Street, NE., Washington, DC 20549–1090.

All submissions should refer to File Number SR–NASDAQ–2012–026. This file number should be included on the subject line if email is used. To help the Commission process and review your comments more efficiently, please use only one method. The Commission will post all comments on the Commission's Internet Web site (*http://www.sec.gov/rules/sro.shtml*). Copies of the submission, all subsequent amendments, all written statements with respect to the proposed rule change that are filed with the Commission, and all written communications relating to the proposed rule change between the Commission and any person, other than those that may be withheld from the public in accordance with the provisions of 5 U.S.C. 552, will be available for Web site viewing and printing in the Commission's Public Reference Room, 100 F Street, NE., Washington, DC 20549, on official business days between the hours of 10 a.m. and 3 p.m. Copies of the filing also will be available for inspection and copying at the principal office of the Exchange. All comments received will be posted without change; the Commission does not edit personal identifying information from submissions. You should submit only information that you wish to make available publicly. All submissions should refer to File Number SR–NASDAQ–2012–026 and should be submitted on or before March 19, 2012.

For the Commission, by the Division of Trading and Markets, pursuant to delegated authority.[11]

Kevin M. O'Neill,

Deputy Secretary.

[FR Doc. 2012–4480 Filed 2–24–12; 8:45 am]

BILLING CODE 8011–01–P

[11] 17 CFR 200.30–3(a)(12).

SECURITIES AND EXCHANGE COMMISSION

[Release No. 34–66430; File No. SR–Phlx–2011–178]

Self-Regulatory Organizations; NASDAQ OMX PHLX LLC; Order Approving Proposed Rule Change Relating to Stock Execution Clerks

February 21, 2012.

On December 20, 2011, NASDAQ OMX PHLX LLC (''Exchange'') filed with the Securities and Exchange Commission (''Commission''), pursuant to Section 19(b)(1) of the Securities Exchange Act of 1934 (''Act'') [1] and Rule 19b–4 thereunder,[2] a proposed rule change to eliminate the stock execution clerk registration category from the Exchange's rules. The proposed rule change was published for comment in the **Federal Register** on January 9, 2012.[3] The Commission received no comments on the proposal.

The purpose of the proposed rule change is to eliminate the category of stock execution clerk from the Exchange's rules. Exchange Rule 1090 currently defines a stock execution clerk as any clerk other than a specialist clerk on the Exchange trading floor who functions as an intermediary in a transaction (i) consummated on the Exchange; (ii) entered verbally for execution other than on the Exchange; or (iii) entered into a third party system designed to execute transactions other than on the Exchange.[4] A stock execution clerk is intended to provide a service to Exchange members on the Options Floor by accepting orders for the purchase and sale of securities underlying options transactions. Once such orders are accepted, the stock execution clerk forwards such orders to the appropriate marketplace for execution. According to the Exchange, the transactions executed are typically hedging transactions in underlying stocks for Exchange specialists and Registered Options Traders.

The Exchange has represented that this registration capacity is outdated and no longer necessary. According to the Exchange, the function of a stock execution clerk has become largely automated, as transactions that were handled by stock execution clerks now take place off-floor and mostly occur electronically. As such, the type of business conducted by stock execution clerks is not conducted on the Exchange's trading floor today. The Exchange stated that there are not currently any registered stock execution clerks on the Exchange, and there have not been for some time.

After careful review, the Commission finds that the proposed rule change is consistent with the requirements of the Act and the rules and regulations thereunder applicable to a national securities exchange [5] and, in particular, the requirements of Section 6(b)(5) of the Act.[6] Specifically, the Commission finds that the proposed rule change is designed to promote just and equitable principles of trade, to remove impediments to and perfect the mechanism of a free and open market and a national market system, and, in general, to protect investors and the public interest.

The proposal will eliminate the stock execution clerk registration category from the Exchange's rules. There are no clerks currently registered as a stock execution clerks on the Exchange's trading floor, and there have not been for some time. Given that there are currently no stock execution clerks registered with the Exchange, and that transactions that were previously handled by stock execution clerks now take place off-floor and mostly occur electronically, this registration category is no longer necessary. As such, deleting this category of clerks is reasonably designed to provide clarity to members, and to keep the Exchange's rules updated. For the foregoing reasons, the Commission believes that the proposed rule change is consistent with the Act.

It is therefore ordered, pursuant to Section 19(b)(2) of the Act,[7] that the proposed rule change (SR–Phlx–2011–178) be, and it hereby is, approved.

For the Commission, by the Division of Trading and Markets, pursuant to delegated authority.[8]

Kevin M. O'Neill,

Deputy Secretary.

[FR Doc. 2012–4403 Filed 2–24–12; 8:45 am]

BILLING CODE 8011–01–P

[1] 15 U.S.C. 78s(b)(1).

[2] 17 CFR 240.19b–4.

[3] *See* Securities Exchange Act Release No. 66079 (January 3, 2012), 77 FR 1099.

[4] *See* Exchange Rule 1090, Commentary .01(a).

[5] In approving this proposed rule change, the Commission has considered the proposed rule's impact on efficiency, competition, and capital formation. *See* 15 U.S.C. 78c(f).

[6] 15 U.S.C. 78f(b)(5).

[7] 15 U.S.C. 78s(b)(2).

[8] 17 CFR 200.30–3(a)(12).

SECURITIES AND EXCHANGE COMMISSION

[Release No. 34–66434; File No. SR–ICEEU–2012–02]

Self-Regulatory Organizations; ICE Clear Europe Limited; Notice of Filing and Order Granting Accelerated Approval of Proposed Rule Change To Revise Procedures Related to Certain Technical and Operational Changes Relating to Operational Processing of Restructuring Credit Events Under CDS Contracts

February 21, 2012.

Pursuant to Section 19(b)(1) of the Securities Exchange Act of 1934 (''Act'')[1] and Rule 19b–4 thereunder[2] notice is hereby given that on February 7, 2012, ICE Clear Europe Limited (''ICE Clear Europe'') filed with the Securities and Exchange Commission (''Commission'') the proposed rule change as described in Items I, II and III below, which Items have been prepared primarily by ICE Clear Europe. The Commission is publishing this notice to solicit comments on the proposed rule change from interested persons and to approve the proposed rule change on an accelerated basis.

I. Self-Regulatory Organization's Statement of the Terms of Substance of the Proposed Rule Change

ICE Clear Europe is in regular communication with representatives of its Clearing Members, as that term is defined in the Rules of ICE Clear Europe[3] (the ''Rules''), in relation to the operation of clearing processes and arrangements. ICE Clear Europe has published these proposed technical procedural changes, has carried out a public consultation process in respect of all of the changes described below, and has presented and agreed to the changes described below with its Clearing Members. These changes seek processes to be followed by ICE Clear Europe and its Clearing Members on the occurrence of any ''restructuring credit event'' under applicable CDS Contracts (as defined by ICE Clear Europe Rule 101). ICE Clear Europe takes the view that the proposed rule changes are improvements in operational services that implement changes that are principally administrative in nature.

Specifically, ICE Clear Europe makes amendments to its procedures for the processing of restructuring credit events under CDS Contracts submitted and accepted for clearing by ICE Clear Europe, to reflect changes to systems used by the repository for recording such instruments, for processing of notices relating to such credit events. The repository presently used by ICE Clear Europe for these purposes is The Depository Trust & Clearing Corporation (''DTCC'') Trade Information Warehouse. These changes were published in ICE Clear Europe circular no. C11/171 on November 25, 2011, available at: *https://www.theice.com/publicdocs/clear_europe/circulars/C11171_att1.pdf*.

The proposed changes allow for more operationally efficient and straight-through processing of the service of credit event notices and other notices following the occurrence of a restructuring credit event. The changes reflect changes made to the account structures and processes for the service of notices within the DTCC and should considerably reduce risks for the clearing house and its clearing members.

II. Self-Regulatory Organization's Statement of the Purpose of, and Statutory Basis for, the Proposed Rule Change

In its filing with the Commission, ICE Clear Europe included statements concerning the purpose of and basis for the proposed rule change and discussed any comments it received on the proposed rule change. The text of these statements may be examined at the places specified in Item IV below. ICE Clear Europe has prepared summaries, set forth in sections (A), (B), and (C) below, of the most significant aspects of these statements.[4]

(A) Self-Regulatory Organization's Statement of the Purpose of, and Statutory Basis for, the Proposed Rule Change

The proposed rule changes consist of technical rule changes that are designed to implement operational and process improvements that have been discussed with and approved by the Clearing Members of ICE Clear Europe. The principal purpose of the proposed rule change is for the applicable rule or procedural provision to be updated to reflect such improvement. In particular, the proposed rule changes relate to the processing of restructuring credit events under the terms of cleared CDS Contracts submitted and accepted for clearing by ICE Clear Europe.

Following consultation with its Clearing Members, ICE Clear Europe determined that the CDS Procedures needed to be updated in order to process a restructuring credit event in light of changes to DTCC's systems. The proposed amended procedures modify the procedures for processing of restructuring credit events, principally those for the notification and processing of Matched Pairs (as defined below) in the event of any restructuring credit event. The majority of the changes relate to Section 8.4 of the procedures, which governs the allocation and processing of Matched Pairs. Matched Pairs are constituted of two clearing members who are matched with one another for purposes of delivering credit event notices to ICE Clear Europe and receiving credit event notices from ICE Clear Europe. While the proposed changes to Section 8.4 do not modify the basic principles of netting (or aggregation) of CDS Contracts prior to the processing of the applicable restructuring credit event, of the allocation of Matched Pairs pursuant to Rules 1507 and 1508, or of the obligation of ICE Clear Europe to issue Matched Pairs notices promptly pursuant to those Rules, the proposed amended procedures do modify: (a) The timing of transmission of RMP Matching Reports,[5] and the procedures and timing for checking that any such RMP Matching Report reflects the applicable Clearing Members' net Open Contract Position (as defined in the Rules) (at Section 8.4(d)); (b) the timing, form, and method for delivery of Matched Pairs notices (at Section 8.4(e)); (c) the timing and process for the input of records of all CDS Contracts being replaced pursuant to such matching process (at Section 8.4 (e)(v) and (vi)); (d) the specification of electronic notice for restructuring credit event notices (at Section 8.4(f)); and (e) changes to the Manual Notice Process[6] that specify procedures for reconciliation of the records of ICE Clear Europe with those of the Clearing Members and with those specified on the DTCC systems (at Sections 8.4(f)(v) and 8.4(g)). In each case, the applicable procedure is modified to harmonize the pre-existing

[1] 15 U.S.C. 78s(b)(1).

[2] 17 CFR 240.19b–4.

[3] *See* ICE Clear Europe Rule 101. The Rules of ICE Clear Europe are available on-line at: *https://www.theice.com/Rulebook.shtml?clearEuropeRulebook=*.

[4] The Commission has modified the text of the summaries prepared by ICE Clear Europe.

[5] The term ''RMP Matching Report'' means the report given by the Clearing House, as referred to in paragraph 8.4(e), to each CDS Clearing Member identifying the RMPs and allocations of Matched Pairs and the associated MP Amounts affecting the Open Contract Position of that CDS Clearing Member, which report comprises Matched Pair Notices for purposes of Rule 1508 in respect of each Matched Pair.

[6] The term ''Manual Notice Process'' means the process for the delivery, receipt and copying to the Clearing House of notices pursuant to paragraph 8.4(g).

procedures with those of DTCC and the Clearing Members. No change is made to the rights or obligations of Clearing Members in respect of CDS Contracts, and no change is made to the custody or guarantee fund functions of ICE Clear Europe.

ICE Clear Europe has engaged in a public consultation process in relation to all the changes, pursuant to the circular referred to above, as it was required to do under applicable U.K. law. This public consultation involved the publication of such circular on a publicly accessible portion of the Internet Web site of ICE Clear Europe. ICE Clear Europe has received no opposing views from its Clearing Members in relation to the proposed rule amendments and received no responses to its public consultations during the consultation period. The proposed rule change is not inconsistent with the existing rules of ICE Clear Europe, including any other rules proposed to be amended.

(B) Self-Regulatory Organization's Statement on Burden on Competition

ICE Clear Europe does not believe the proposed rule change would have any impact, or impose any burden on competition.

(C) Self-Regulatory Organization's Statement on Comments on the Proposed Rule Change Received From Members, Participants or Others

Written comments relating to the proposed rule change have been solicited by ICE Clear Europe pursuant to public consultation processes in the circulars referred to above. No comments have been received, presumably in light of the extensive discussions that preceded the public consultations. The time period for the public consultation has closed so ICE Clear Europe does not expect to receive any further written comments as a result of this process.

III. Solicitation of Comments

Interested persons are invited to submit written data, views, and arguments concerning the foregoing, including whether the proposed rule change is consistent with the Act. Comments may be submitted by any of the following methods:

Electronic Comments

- Use the Commission's Internet comment form (*http://www.sec.gov/rules/sro.shtml*) or

Send an email to *rule-comments@sec.gov*. Please include File Number SR–ICEEU–2012–02 on the subject line.

Paper Comments

- Send paper comments in triplicate to Elizabeth M. Murphy, Secretary, Securities and Exchange Commission, 100 F Street NE., Washington, DC 20549–1090.

All submissions should refer to File Number SR–ICEEU–2012–02. This file number should be included on the subject line if email is used. To help the Commission process and review your comments more efficiently, please use only one method. The Commission will post all comments on the Commission's Internet Web site (*http://www.sec.gov/rules/sro.shtml*). Copies of the submission, all subsequent amendments, all written statements with respect to the proposed rule change that are filed with the Commission, and all written communications relating to the proposed rule change between the Commission and any person, other than those that may be withheld from the public in accordance with the provisions of 5 U.S.C. 552, will be available for Web site viewing and printing in the Commission's Public Reference Section, 100 F Street NE., Washington, DC 20549, on official business days between the hours of 10 a.m. and 3 p.m. Copies of such filings will also be available for inspection and copying at the principal office of ICE Clear Europe and on ICE Clear Europe's Web site at *https://www.theice.com/publicdocs/regulatory_filings/ICE_Clear_Europe_Rule_Amendments_2012_02.pdf.*

All comments received will be posted without change; the Commission does not edit personal identifying information from submissions. You should submit only information that you wish to make available publicly. All submissions should refer to File Number SR–ICEEU–2012–02 and should be submitted on or before March 19, 2012.

IV. Commission's Findings and Order Granting Accelerated Approval of Proposed Rule Change

Section 19(b) of the Act [7] directs the Commission to approve a proposed rule change of a self-regulatory organization if it finds that such proposed rule change is consistent with the requirements of the Act and the rules and regulations thereunder applicable to such organization. The Commission finds that the proposed rule change is consistent with the requirements of the Act, in particular the requirements of Section 17A of the Act,[8] and the rules and regulations thereunder applicable to ICE Clear Europe. Specifically, the Commission finds that the proposed rule change is consistent with Section 17A(b)(3)(F) of the Act,[9] which requires, among other things, that the rules of a registered clearing agency be designed to promote the prompt and accurate clearance and settlement of derivative agreements, contracts, and transactions because it should permit ICE Clear Europe to align its restructuring credit event processing with the system used by the repository for processing notices related to such credit events.

ICE Clear Europe has requested that the Commission approve the proposed rule change on an accelerated basis for good cause shown. The Commission finds good cause for accelerating approval because ICE Clear Europe must have operational procedures that match the operational procedures of the system used by the repository for processing notices of restructuring credit events in order to process such credit events efficiently and effectively.

V. Conclusion

It is therefore ordered pursuant to Section 19(b)(2) of the Act that the proposed rule change (SR–ICEEU–2012–02) be, and hereby is, approved on an accelerated basis.

For the Commission by the Division of Trading and Markets, pursuant to delegated authority.[10]

Kevin O'Neill,

Deputy Secretary.

[FR Doc. 2012–4421 Filed 2–24–12; 8:45 am]

BILLING CODE 8011–01–P

[7] 15 U.S.C. 78s(b).

[8] 15 U.S.C. 78q–1. In approving this proposed rule change, the Commission has considered the proposed rule's impact on efficiency, competition, and capital formation. 15 U.S.C. 78c(f).

[9] 15 U.S.C. 78q–1(b)(3)(F).

[10] 17 CFR 200.30–3(a)(12).

SECURITIES AND EXCHANGE COMMISSION

[Release No. 34–66427; File No. SR–BATS–2012–011]

Self-Regulatory Organizations; BATS Exchange, Inc.; Notice of Filing and Immediate Effectiveness of Proposed Rule Change Adopting Rebates for the Competitive Liquidity Provider Program

February 21, 2012.

Pursuant to Section 19(b)(1) of the Securities Exchange Act of 1934 (''Act'') [1] and Rule 19b–4 thereunder,[2] notice is hereby given that on February

[1] 15 U.S.C. 78s(b)(1).

[2] 17 CFR 240.19b–4.

8, 2012, BATS Exchange, Inc. (''BATS'' or ''Exchange'') filed with the Securities and Exchange Commission (''Commission'') the proposed rule change as described in Items I, II, and III below, which Items have been prepared by the Exchange. The Commission is publishing this notice to solicit comments on the proposed rule change from interested persons.

I. Self-Regulatory Organization's Statement of the Terms of Substance of the Proposed Rule Change

The Exchange proposes to institute a fee change in connection with an incentive program for Exchange-registered market makers (''Market Makers'') in securities listed on the Exchange. Changes to the Exchange's fees pursuant to this proposal will be effective upon filing.

The text of the proposed rule change is available at the Exchange's Web site at *http://www.batstrading.com,* at the principal office of the Exchange, and at the Commission's Public Reference Room.

II. Self-Regulatory Organization's Statement of the Purpose of, and Statutory Basis for, the Proposed Rule Change

In its filing with the Commission, the Exchange included statements concerning the purpose of and basis for the proposed rule change and discussed any comments it received on the proposed rule change. The text of these statements may be examined at the places specified in Item IV below. The Exchange has prepared summaries, set forth in Sections A, B, and C below, of the most significant parts of such statements.

A. Self-Regulatory Organization's Statement of the Purpose of, and Statutory Basis for, the Proposed Rule Change

1. Purpose

On August 30, 2011, the Exchange received approval of rules applicable to the qualification, listing and delisting of securities of issuers on the Exchange.[3] More recently, the Exchange received approval to operate a program that is designed to incentivize certain market makers registered with the Exchange as Competitive Liquidity Providers (''CLPs'') to enhance liquidity on the Exchange in securities listed on the Exchange (the ''Competitive Liquidity Provider Program'' or ''CLP Program'').[4] The Exchange proposes to adopt financial incentives for the Competitive Liquidity Provider Program, as described below. These incentives include competition amongst CLPs for daily rebates awarded based on quoting activity and the ability to earn free executions in Exchange auctions of Exchange-listed securities.

Daily Rebates

Pursuant to the CLP Program, the Exchange will measure the performance of CLPs in assigned securities by calculating Size Event Tests (''SETs'') in each second of trading during every day on which the Exchange is open for business. At a randomly selected point in time during Regular Trading Hours, at least once per second, the Exchange will measure each CLP's quoted size at the NBB and NBO. The CLP with the greatest aggregate size at the NBB and NBO at each SET (*i.e.,* the combined size at the NBB and NBO) will be considered to have a ''winning SET.'' A CLP must have at least 10% of the winning SETs on any trading day in order meet its daily quoting requirement and to be eligible for the daily rebates proposed below. As proposed, any Market Maker registered in a security as a CLP that has satisfied the daily quoting requirement will be eligible to receive a single daily financial rebate for each day's quoting activity as follows:

Class of security	Amount of total daily rebate	Allocation of daily rebate
Tier I Securities Listed on the Exchange Pursuant to Rule 14.8 for Six Months Commencing from the Date of Initial Listing on the Exchange.	$500 per day	80% ($400) to CLP with highest number of winning SETs; 20% ($100) to CLP with second highest number of winning SETs.
Tier I Securities Listed on the Exchange Pursuant to Rule 14.8 for Remaining Time Subject to CLP Program.	250 per day	80% ($200) to CLP with highest number of winning SETs; 20% ($50) to CLP with second highest number of winning SETs.
Tier II Securities Listed on the Exchange Pursuant to Rule 14.9.	100 per day	100% to CLP with highest number of winning SETs.
ETPs Listed Pursuant to Rule 14.11	250 per day	80% ($200) to CLP with highest number of winning SETs; 20% ($50) to CLP with second highest number of winning SETs.

As set forth in the chart above, for all Tier I securities and exchange traded products (''ETPs'') listed on the Exchange, the Exchange proposes to offer quoting incentives to the two CLPs with the highest number of winning SETs during Regular Trading Hours on the Exchange. For each award, the Exchange will provide 80% of the incentive to the first-place CLP and 20% of the incentive to the second-place CLP. In the event only one CLP is eligible for the daily rebate, 100% of such rebate will be provided to such CLP. In the event that multiple CLPs have an equal number of winning SETs, the CLP with the highest executed volume in the security will be awarded the applicable daily rebate. For Tier II securities listed on the Exchange, the Exchange will provide 100% of the quoting incentive to the first-place CLP.

The Exchange proposes to offer a daily quoting incentive of $500 for CLPs ($400 for the first-place CLP and $100 for the second-place CLP) CLPs for the first six months that a Tier I corporate security is listed on the Exchange pursuant to Rule 14.8. Such listing could either be the result of an issuers initial public offering (''IPO'') on the Exchange or due to the transfer of an issuer from another exchange to the Exchange. For the remainder of the time a Tier I corporate security is listed on the Exchange, and for all ETPs, the Exchange proposes to offer a $250 daily quoting incentive ($200 for the first-place CLP and $50 for the second-place CLP). Finally, the Exchange proposes to offer a daily quoting incentive of $100 for Tier II securities listed on the Exchange pursuant to Rule 14.9.

[3] *See* Securities Exchange Act Release No. 65225 (August 30, 2011), 76 FR 55148 (September 6, 2011) (SR–BATS–2011–018).

[4] *See* Securities Exchange Act Release No. 66307 (February 2, 2012), 77 FR 6608 (February 8, 2012) (SR–BATS–2011–051).

Waiver of Fees for Auction Executions

In order to further incentivize Members to register as CLPs and participate in the CLP Program, the Exchange proposes to waive applicable execution fees in Exchange auctions for any CLP that receives a daily rebate for a specific Exchange-listed security on at least two (2) trading days during a calendar month. The auction fee waiver will be provided on a security-by-security basis in the subsequent calendar month for CLPs that qualify. Further, because a CLP cannot qualify for this incentive until at least the second calendar month of a security's listing, in the initial calendar month of a security's listing on the Exchange, a CLP that is assigned the security will not be charged for any executions in the security that occur in any auction of the security that is conducted by the Exchange pursuant to Rule 11.23.

2. Statutory Basis

The Exchange believes that the proposed rule change is consistent with the requirements of the Act and the rules and regulations thereunder that are applicable to a national securities exchange, and, in particular, with the requirements of Section 6 of the Act.[5] Specifically, the Exchange believes that the proposed rule change is consistent with Sections 6(b)(4) and (b)(5) of the Act,[6] in that it provides for the equitable allocation of reasonable dues, fees and other charges among issuers, and it does not unfairly discriminate between customers, issuers, brokers or dealers.

At the outset, the Exchange believes that the proposal is not unfairly discriminatory due to the fact that registration as an Exchange Market Maker, and, in turn, as a CLP, is equally available to all Members that satisfy the requirements of Rule 11.8. The Exchange believes that by allocating pricing benefits to CLPs that make tangible commitments to enhancing market quality for securities listed on the Exchange, the proposal will encourage the development of new financial products, provide a better trading environment for investors in Exchange-listed securities, and generally encourage greater competition between listing venues.

As proposed, the CLP Program is designed to enhance the Exchange's competitiveness as a listing venue and to strengthen its market quality for Exchange-listed securities. The Exchange is launching its listings business at a time in which there are two dominant primary listing venues, the New York Stock Exchange and Nasdaq. The Exchange believes that the proposed change would increase competition by incenting Exchange Market Makers to register as CLPs, which will enhance the quality of quoting in Exchange-listed securities and will further assist the Exchange to develop an alternative to Nasdaq and the New York Stock Exchange for an issuer seeking to list its securities. Accordingly, the Exchange believes that the proposal will compliment the Exchange's program for listing securities on the Exchange, which will, in turn, provide issuers with another option for raising capital in the public markets, thereby promoting the principles discussed in Section 6(b)(5) of the Act.[7]

The Exchange believes that the proposed quoting incentives are fair and equitable in that registered CLPs will be competing for rewards that are calculated based solely on the Exchange's measurement of SETs, and the quoting incentive provided varies only depending on the type of security for which such CLP is registered. The Exchange further believes that differentiation between various types of Exchange-listed securities is fair and equitable and not unreasonably discriminatory because the risks and necessary incentives for a market maker to make a market in different securities vary, as described in further detail below.

The Exchange proposes a lower quoting incentive for Tier II corporate issues than other Exchange listed securities. Specifically, the Exchange proposes to provide an incentive of $100 per day for the CLP with the highest number of winning SETs during the applicable trading day with respect to a Tier II corporate issue subject to the CLP Program. The Exchange has also chosen not to offer a quoting incentive to the CLP with the second highest number of winning SETs during the applicable trading day for Tier II corporate issues. The Exchange believes that this quoting incentive structure for Tier II corporate issues is reasonable because the Exchange does not expect to have as many registered CLPs for Tier II corporate issues as compared to Tier I corporate issues and ETPs. This is because if there is indeed less competition in Tier II issues, then the registered CLPs in Tier II issues will have a better opportunity to receive the daily quoting incentive. Also, because the quoting incentive is lower, the Exchange believes it is reasonable to simply provide a single quoting incentive to the CLP with the highest number of winning SETs during the applicable trading day for Tier II corporate issues.

The Exchange proposes a daily quoting incentive of $250 per day for ETPs listed pursuant to Exchange Rule 14.11, with $200 for the first-place CLP and $50 for the second-place CLP. The Exchange believes that this quoting incentive is reasonable because the Exchange expects to have several competing CLPs for each ETP, and thus, the daily quoting incentive must be slightly larger (to incent competition even by CLPs that may receive the incentive less frequently). Due to the additional competition, the Exchange also believes it is reasonable to provide a quoting incentive to both the first and second-place CLP for ETPs.

The Exchange also expects to have several competing CLPs for Tier I corporate issues. While the value of an ETP can be readily monitored and updated based on analysis conducted of the underlying securities or products, market making for a corporate issue requires additional analysis and imposes different risks. Due to the additional risks, the Exchange believes that additional incentives are necessary and appropriate in order to encourage CLPs to register as CLPs for Tier I corporate issues listed on the Exchange pursuant to Rule 14.8 for a six-month period commencing from the date of initial listing on the Exchange. Based on the additional risks and the additional competition, the Exchange believes that the proposed quoting incentive for Tier I corporate issues of $500 is reasonable for the first six months that a security is listed on the Exchange. After six months, because CLPs should become more familiar with the market for the applicable issue, the Exchange believes it is reasonable to provide the same quoting incentive as it provides for ETPs.

Finally, as described above, in order to further incentivize Members to register as CLPs and participate in the CLP Program, the Exchange proposes to waive applicable execution fees in Exchange auctions for any CLP that receives a daily rebate for a specific Exchange-listed security on at least two (2) trading days during a calendar month. The Exchange believes that the waiver of auction fees is equitable and not unreasonably discriminatory because it will be available to all CLPs registered for the applicable issue and will be awarded based on objective criteria. Also, as noted above, registration as an Exchange Market Maker, and, in turn, as a CLP, is equally available to all Members that satisfy the requirements of Rule 11.8. The

[5] 15 U.S.C. 78f.

[6] 15 U.S.C. 78f(b)(4) and (b)(5).

[7] 15 U.S.C. 78f(b)(5).

Exchange believes that the waiver of auction fees is reasonable because it is based on a relatively low threshold, and thus, will help to incentivize Members to register as CLPs and participate in the CLP Program and to stay registered in the CLP Program even if such Members rarely receive the applicable daily quoting incentive.

B. Self-Regulatory Organization's Statement on Burden on Competition

The Exchange does not believe that the proposed rule change imposes any burden on competition.

C. Self-Regulatory Organization's Statement on Comments on the Proposed Rule Change Received From Members, Participants, or Others

No written comments were solicited or received.

III. Date of Effectiveness of the Proposed Rule Change and Timing for Commission Action

Pursuant to Section 19(b)(3)(A)(ii) of the Act [8] and Rule 19b–4(f)(2) thereunder,[9] the Exchange has designated this proposal as establishing or changing a due, fee, or other charge applicable to the Exchange's Members and non-members, which renders the proposed rule change effective upon filing.

At any time within 60 days of the filing of the proposed rule change, the Commission summarily may temporarily suspend such rule change if it appears to the Commission that such action is necessary or appropriate in the public interest, for the protection of investors, or otherwise in furtherance of the purposes of the Act.

IV. Solicitation of Comments

Interested persons are invited to submit written data, views, and arguments concerning the foregoing, including whether the proposed rule change is consistent with the Act. Comments may be submitted by any of the following methods:

Electronic Comments

- Use the Commission's Internet comment form (*http://www.sec.gov/rules/sro.shtml*); or
- Send an email to *rule-comments@sec.gov*. Please include File Number SR–BATS–2012–011 on the subject line.

Paper Comments

- Send paper comments in triplicate to Elizabeth M. Murphy, Secretary, Securities and Exchange Commission, 100 F Street NE., Washington, DC 20549–1090.

All submissions should refer to File Number SR–BATS–2012–011. This file number should be included on the subject line if email is used. To help the Commission process and review your comments more efficiently, please use only one method. The Commission will post all comments on the Commission's Internet Web site (*http://www.sec.gov/rules/sro.shtml*). Copies of the submission, all subsequent amendments, all written statements with respect to the proposed rule change that are filed with the Commission, and all written communications relating to the proposed rule change between the Commission and any person, other than those that may be withheld from the public in accordance with the provisions of 5 U.S.C. 552, will be available for Web site viewing and printing in the Commission's Public Reference Room, 100 F Street NE., Washington, DC 20549, on official business days between the hours of 10 a.m. and 3 p.m. Copies of such filing also will be available for inspection and copying at the principal office of the Exchange. All comments received will be posted without change; the Commission does not edit personal identifying information from submissions. You should submit only information that you wish to make publicly available. All submissions should refer to File Number SR–BATS–2012–011 and should be submitted on or before March 19, 2012.

For the Commission, by the Division of Trading and Markets, pursuant to delegated authority.[10]

Kevin M. O'Neill,

Deputy Secretary.

[FR Doc. 2012–4401 Filed 2–24–12; 8:45 am]

BILLING CODE 8011–01–P

[8] 15 U.S.C. 78s(b)(3)(A)(ii).

[9] 17 CFR 240.19b–4(f)(2).

[10] 17 CFR 200.30–3(a)(12).

SECURITIES AND EXCHANGE COMMISSION

[Release No. 34–66429; File No. SR–Phlx–2012–20]

Self-Regulatory Organizations; Notice of Filing and Immediate Effectiveness of Proposed Rule Change by NASDAQ OMX PHLX LLC To Modify Connectivity Options and Fees

February 21, 2012.

Pursuant to Section 19(b)(1) of the Securities Exchange Act of 1934 (''Act''),[1] and Rule 19b–4 [2] thereunder, notice is hereby given that on February 15, 2012, NASDAQ OMX PHLX LLC (''Phlx'' or ''Exchange'') filed with the Securities and Exchange Commission (''SEC'' or ''Commission'') the proposed rule change as described in Items I and II below, which Items have been prepared by the Exchange. The Commission is publishing this notice to solicit comments on the proposed rule change from interested persons.

I. Self-Regulatory Organization's Statement of the Terms of the Substance of the Proposed Rule Change

The Exchange proposes to modify the Phlx Fee Schedule, Section X(b) regarding Exchange connectivity options and fees.

The text of the proposed rule change is available on the Exchange's Web site at *http://www.nasdaqtrader.com/micro.aspx?id=PHLXRulefilings,* at the principal office of the Exchange, and at the Commission's Public Reference Room.

II. Self-Regulatory Organization's Statement of the Purpose of, and Statutory Basis for, the Proposed Rule Change

In its filing with the Commission, the Exchange included statements concerning the purpose of and basis for the proposed rule change and discussed any comments it received on the proposed rule change. The text of these statements may be examined at the places specified in Item IV below. The Exchange has prepared summaries, set forth in sections A, B, and C below, of the most significant aspects of such statements.

A. Self-Regulatory Organization's Statement of the Purpose of, and the Statutory Basis for, the Proposed Rule Change

1. Purpose

The Exchange proposes to modify the Phlx Fee Schedule, Section X(b) regarding connectivity to The NASDAQ Stock Market LLC (''NASDAQ'').[3] Specifically, the Exchange proposes to (i) establish a connectivity fee for a 40Gb enhanced bandwidth option; and (ii) provide a waiver of installation fees for upgrades.

Enhanced Bandwidth Option

The Exchange currently offers various bandwidth options for connectivity to the Exchange, including a 10Gb fiber

[1] 15 U.S.C. 78s(b)(1).

[2] 17 CFR 240.19b–4.

[3] All co-location services are provided by NASDAQ Technology Services LLC.

connection, a 1Gb copper connection, and a 100 MB connection.[4] In keeping with changes in technology, the Exchange now proposes to provide an enhanced bandwidth option to enable its clients [sic] a more efficient connection to the Exchange. The Exchange proposes a 40G [sic] fiber connection with a one-time installation fee of $1,500, and a per-month connectivity fee of $15,000. The growth in the size of consolidated and proprietary data feeds has resulted in demand for higher bandwidth. As the number of feeds available and the size of the feeds increases, the bandwidth required for market data feeds steadily rises. The Exchange's proposal provides the co-located client the option to select the bandwidth that is appropriate for the firm's current needs and enables it to add or change services as its needs change.

Waiver of Installation Fees

The Exchange also proposes to provide a waiver of the installation fees for client orders of 10Gb and 40Gb fiber connectivity to the Exchange completed between the effectiveness of this proposal and May 31, 2012. The Exchange is providing the waiver to assist its co-located clients in upgrading to higher bandwidth connections to meet the growing needs of co-located clients' business operations.

2. Statutory Basis

The Exchange believes that its proposal is consistent with Section 6(b) of the Act[5] in general, and with Section 6(b)(4) of the Act,[6] in particular, in that it provides for the equitable allocation of reasonable dues, fees and other charges among members and issuers and other persons using any facility or system which the Exchange operates or controls. The Exchange also believes the proposal furthers the objectives of Section 6(b)(5) of the Act[7] in that it is designed to promote just and equitable principles of trade, to remove impediments to and perfect the mechanism of a free and open market and a national market system, and, in general to protect investors and the public interest and are [sic] not designed to permit unfair discrimination between customer, issuers, brokers and dealers.

Enhanced Bandwidth Option

The Exchange believes that its proposal is consistent with Section 6(b)(4) of the Act in that it provides for the equitable allocation of reasonable dues, fees and other charges among members and issuers and other persons using any facility or system which the Exchange operates or controls.

Reasonable Fees

The Exchange's proposal for 40Gb fiber connectivity will provide co-location clients the ability to increase data transmission and reduce latency, thereby enhancing their operations. The Exchange believes the proposed fees for 40B [sic] fiber connectivity to the Exchange are reasonable because the fees charged for the higher bandwidth allow the Exchange to cover the hardware, installation, testing and connection costs to maintain and manage the enhanced connection. The proposed fees allow the Exchange to recoup costs associated with providing the 40Gb connection and provide the Exchange a profit while providing customers the possibility of reducing the number of their connections to the Exchange. While no other Exchange currently offers the proposed 40Gb bandwidth connection, the Exchange further believes that the proposed fees are reasonable in that the proposed fees are proportionately less than the fees charged by other trading venues for similar connectivity services.[8]

Equitable Allocation

The Exchange also believes the proposed 40Gb fiber fee for connectivity to the Exchange is equitably allocated in that all Exchange members that voluntarily select this service option will be charged the same amount to cover the hardware, installation, testing and connection costs to maintain and manage the enhanced connection. The proposed fees allow the Exchange to recoup costs associated with providing the 40Gb connection and provide the Exchange a profit while providing customers the possibility of reducing the number of their connections to the Exchange. All Exchange members have the option to select this voluntary co-location service.

The Exchange also believes the proposal furthers the objectives of Section 6(b)(5) of the Act[9] in that it is designed to promote just and equitable principles of trade, to remove impediments to and perfect the mechanism of a free and open market and a national market system, and, in general to protect investors and the public interest and are [sic] not designed to permit unfair discrimination between customer, issuers, brokers and dealers.

Removes Impediments and Perfects Mechanism of a Free and Open Market

Furthermore, the enhanced 40Gb fiber connectivity assists the co-located clients in making their network connectivity more efficient, as clients could consolidate the number of connections to the Exchange. Due to the continuous growth of the size of consolidated and proprietary market data feeds transmitted over the Exchange connections, clients need to monitor their connections for data spikes and data gapping issues which can result in potential trading errors, trading losses and may require network resource intervention to resolve. The Exchange believes the enhanced 40Gb connection will remove impediments to and perfect the mechanism of a free and open market and a national market system because the enhanced connectivity option will remove the potential for data spikes and data gapping issues that result from the transmission of the growing size of the consolidated and proprietary market data feeds.

Protects Investors and the Public Interest

The Exchange also believes that the reduction in latencies attributed to the enhanced 40Gb connection option further serves to protect investors and the public interest. The reduction in latencies will remove the potential for data spikes and data gapping issues that result from the transmission of the growing size of the consolidated and proprietary market data feeds. Such data spiking and data gapping issues have the potential of disrupting the marketplace which could negatively impact the investors as well as the public interest.

Not Unfairly Discriminatory

The Exchange also believes the proposed 40Gb fiber fee for connectivity to the Exchange is not unfairly discriminatory in that all Exchange members have the option of selecting the 40Gb connection to the Exchange, and there is no differentiation among members with regard to the fees charged for this option. Furthermore, the Exchange believes the [sic] providing all Exchange Members the proposed

[4] *See* Exchange Fee Schedule, Section X(b), Connectivity to Nasdaq.

[5] 15 U.S.C. 78f(b).

[6] 15 U.S.C. 78f(b)(4).

[7] 15 U.S.C. 78f(b)(5).

[8] NYSE charges $10,000 per month for 10Gb LCN (Liquidity Center Network) Connection. *See https://usequities.nyx.com/sites/usequities.nyx.com/files/nyse_arca_marketplace_fees_1.3.2012.pdf,* page 13. Furthermore, ISE charges $4,000 per month for 10Gb Ethernet network connections. *See http://www.ise.com/assets/documents/OptionsExchange/legal/fee/fee_schedule.pdf,* page 9. By contrast, the Exchange is proposing to offer four times the bandwidth for a monthly fee of $15,000.

[9] 15 U.S.C. 78f(b)(5).

connectivity option for the proposed fees, which covers the hardware, installation, testing and connection costs to maintain and manage the enhanced connection, promotes just and equitable principles of trade.

Waiver of Installation Fees

The Exchange believes that its proposal for the waiver of installation fees is consistent with Section 6(b) of the Act [10] in general, and with Section 6(b)(4) of the Act,[11] in particular, in that it provides for the equitable allocation of reasonable dues, fees and other charges among members and issuers and other persons using any facility or system which the Exchange operates or controls.

Reasonable Waiver of Fees

The Exchange believes that its proposal to waive the 10Gb and 40Gb fiber connection installation fees is reasonable because it is being provided to assist its co-located clients in upgrading to higher bandwidth connections to meet the growing needs of the co-located clients' business operations at a time in the industry when the ever-increasing size of consolidated and proprietary data fees are [sic] causing higher demand for larger bandwidth options to reduce potential disruption in the marketplace.

Equitably Allocated

The Exchange also believes the proposal to waive the 10Gb and 40Gb fiber connection installation fee is equitably allocated in that all Exchange members that voluntarily select these service options will be afforded the waiver of fees until May 31, 2012. All Exchange members have the option to select these voluntary co-location services.

Not Unfairly Discriminatory

The Exchange also believes the proposal to waive the 10Gb and 40Gb fiber connection installation fee is not unfairly discriminatory in that the waiver of fees is provided to all Exchange members that volunteer for these particular service options, and there is no differentiation among members with regard to the waiver of fees for these options.

B. Self-Regulatory Organization's Statement on Burden on Competition

The Exchange does not believe that the proposed rule change will impose any burden on competition not necessary or appropriate in furtherance of the purposes of the Act.

C. Self-Regulatory Organization's Statement on Comments on the Proposed Rule Change Received From Members, Participants, or Others

No written comments were either solicited or received.

III. Date of Effectiveness of the Proposed Rule Change and Timing for Commission Action

Because the foregoing proposed rule change does not significantly affect the protection of investors or the public interest, does not impose any significant burden on competition, and, by its terms, does not become operative for 30 days from the date on which it was filed, or such shorter time as the Commission may designate, it has become effective pursuant to Section 19(b)(3)(A) of the Act [12] and Rule 19b–4(f)(6) thereunder.[13]

The Exchange has requested that the Commission waive the 30-day operative delay. The Commission believes that waiver of the operative delay is consistent with the protection of investors and the public interest because such waiver will facilitate trading activities by providing members an option to enhance the efficiency of their trading through the 40Gb connectivity. Therefore, the Commission designates the proposal operative upon filing.[14]

At any time within 60 days of the filing of the proposed rule change, the Commission summarily may temporarily suspend such rule change if it appears to the Commission that such action is necessary or appropriate in the public interest, for the protection of investors, or otherwise in furtherance of the purposes of the Act.

IV. Solicitation of Comments

Interested persons are invited to submit written data, views, and arguments concerning the foregoing, including whether the proposed rule change is consistent with the Act. Comments may be submitted by any of the following methods:

Electronic Comments

- Use the Commission's Internet comment form (*http://www.sec.gov/rules/sro.shtml*); or
- Send an email to *rule-comments@sec.gov.* Please include File Number SR–Phlx–2012–20 on the subject line.

Paper Comments

- Send paper comments in triplicate to Elizabeth M. Murphy, Secretary, Securities and Exchange Commission, 100 F Street NE., Washington, DC 20549–1090.

All submissions should refer to File Number SR–Phlx–2012–20. This file number should be included on the subject line if email is used.

To help the Commission process and review your comments more efficiently, please use only one method. The Commission will post all comments on the Commission's Internet Web site (*http://www.sec.gov/rules/sro.shtml).* Copies of the submission, all subsequent amendments, all written statements with respect to the proposed rule change that are filed with the Commission, and all written communications relating to the proposed rule change between the Commission and any person, other than those that may be withheld from the public in accordance with the provisions of 5 U.S.C. 552, will be available for Web site viewing and printing in the Commission's Public Reference Room, 100 F Street NE., Washington, DC 20549, on official business days between the hours of 10 a.m. and 3 p.m. Copies of such filing also will be available for inspection and copying at the principal office of the Exchange. All comments received will be posted without change; the Commission does not edit personal identifying information from submissions. You should submit only information that you wish to make publicly available. All submissions should refer to File Number SR–Phlx–2012–20, and should be submitted on or before March 19, 2012.

For the Commission, by the Division of Trading and Markets, pursuant to delegated authority.[15]

Kevin M. O'Neill,

Deputy Secretary.

[FR Doc. 2012–4402 Filed 2–24–12; 8:45 am]

BILLING CODE 8011–01–P

[10] 15 U.S.C. 78f(b).

[11] 15 U.S.C. 78f(b)(4).

[12] 15 U.S.C. 78s(b)(3)(A).

[13] 17 CFR 240.19b–4(f)(6). In addition, Rule 19b–4(f)(6)(iii) requires the Exchange to give the Commission written notice of the Exchange's intent to file the proposed rule change, along with a brief description and text of the proposed rule change, at least five business days prior to the date of filing of the proposed rule change, or such shorter time as designated by the Commission. The Exchange has satisfied this requirement.

[14] For purposes only of waiving the 30-day operative delay, the Commission has considered the proposed rule's impact on efficiency, competition, and capital formation. *See* 15 U.S.C. 78c(f).

[15] 17 CFR 200.30–3(a)(12).

SECURITIES AND EXCHANGE COMMISSION

[Release No. 34–66432; File No. SR–ISE–2012–08]

Self-Regulatory Organizations; International Securities Exchange, LLC; Notice of Filing and Immediate Effectiveness of a Proposed Rule Change To Expand the Short Term Option Series Program

February 21, 2012.

Pursuant to Section 19(b)(1) of the Securities Exchange Act of 1934 (''Act'') [1] and Rule 19b–4 thereunder,[2] notice is hereby given that, on February 8, 2012, the International Securities Exchange, LLC (the ''Exchange'' or the ''ISE'') filed with the Securities and Exchange Commission (the ''Commission'') the proposed rule change as described in Items I and II below, which Items have been prepared by the Exchange. The Commission is publishing this notice to solicit comments on the proposed rule change from interested persons.

I. Self-Regulatory Organization's Statement of the Terms of Substance of the Proposed Rule Change

The Exchange proposes to amend its rules to expand the Short Term Option Series Program. The text of the proposed rule change is available on the Exchange's Web site *www.ise.com,* at the principal office of the Exchange, and at the Commission's Public Reference Room.

II. Self-Regulatory Organization's Statement of the Purpose of, and Statutory Basis for, the Proposed Rule Change

In its filing with the Commission, the Exchange included statements concerning the purpose of, and basis for, the proposed rule change and discussed any comments it received on the proposed rule change. The text of these statements may be examined at the places specified in Item IV below. The self-regulatory organization has prepared summaries, set forth in Sections A, B and C below, of the most significant aspects of such statements.

A. Self-Regulatory Organization's Statement of the Purpose of, and Statutory Basis for, the Proposed Rule Change

1. Purpose

The purpose of this proposed rule change is to amend ISE Rules 504 and 2009 to expand the Short Term Option Series Program (''STOS Program'').[3] Currently, ISE may select up to 25 currently listed option classes on which short term option series may be opened in the STOS Program. The Exchange proposes to increase this to thirty option classes to participate in the STOS Program. This is a competitive filing and is based on recently approved filings submitted by The NASDAQ Stock Market LLC for the NASDAQ Options Market (''NOM'') and NASDAQ OMX PHLX, Inc. (''PHLX'').[4]

On November 17, 2011, the Exchange amended the STOS Program by increasing the number of strikes that may be listed per class (from 20 to 30) that participates in the STOS Program, and by increasing the number of classes (from 15 to 25) that are eligible to participate in the STOS.[5] On that same day, NOM and PHLX each increased the number of classes that are eligible to participate in their STOS Programs from 15 classes to 30 classes. As a result, ISE is competitively disadvantaged since it operates a substantially similar STOS Program as NOM and PHLX but is limited to selecting only 25 classes that may participate in its STOS Program (whereas PHLX and NOM may each select 30 classes).[6]

The Exchange is not proposing any changes to these additional STOS Program limitations other than to increase from 25 to 30 the number of option classes that may participate in the STOS Program.

ISE notes that the STOS Program has been well-received by market participants, in particular by retail investors. ISE believes a modest increase to the number of classes that may participate in the STOS Program, such as the one proposed in this rule filing, will permit ISE to meet increased customer demand and provide market participants with the ability to hedge in a greater number of option classes.

With regard to the impact of this proposal on system capacity, ISE has analyzed its capacity and represents that it and the Options Price Reporting Authority (''OPRA'') have the necessary systems capacity to handle the potential additional traffic associated with trading of an expanded number of classes that participate in the STOS Program.

The proposed increase to the number of classes eligible to participate in the STOS Program is required for competitive purposes as well as to ensure consistency and uniformity among the competing options exchanges that have adopted similar STOS Programs.

2. Statutory Basis

The Exchange believes that the proposed rule change is consistent with Section 6(b) of the Securities Exchange Act of 1934 [7] (the ''Act'') in general, and furthers the objectives of Section 6(b)(5) of the Act [8] in particular, in that it is designed to prevent fraudulent and manipulative acts and practices, to promote just and equitable principles of trade, to foster cooperation and coordination with persons engaged in facilitating transactions in securities, to remove impediments to and perfect the mechanism of a free and open market and a national market system, and, in general to protect investors and the public interest. The Exchange believes that expanding the current short term options program will result in a continuing benefit to investors by giving them more flexibility to closely tailor their investment decisions and hedging decisions in greater number of securities. The Exchange believes that expanding the current program would provide the investing public and other market participants increased opportunities because an expanded program would provide market participants additional opportunities to hedge their investment thus allowing these investors to better manage their risk exposure. While the expansion of the STOS Program will generate additional quote traffic, the Exchange does not believe that this increased traffic will become unmanageable since the proposal remains limited to a fixed number of classes. Further, the Exchange does not believe that the proposed rule change will result in a material proliferation of additional series because the number of series per class remains limited, and the Exchange does not believe that the additional

[1] 15 U.S.C. 78s(b)(1).

[2] 17 CFR 240.19b–4.

[3] The Exchange adopted the STOS Program on a pilot basis in 2005. *See* Securities Exchange Act Release No. 52012 (July 12, 2005), 70 FR 41246 (July 18, 2005) (SR–ISE–2005–17). The STOS Program was approved on a permanent basis in 2010. *See* Securities Exchange Act Release No. 62444 (July 2, 2010), 75 FR 39595 (July 9, 2010) (SR–ISE–2010–72).

[4] *See* Securities Exchange Act Release Nos. 65775 (November 17, 2011), 76 FR 72473 (November 23, 2011) (SR–NASDAQ–2011–138) and 65776 (November 17, 2011), 76 FR 72482 (November 23, 2011) (SR–PHLX–2011–131).

[5] *See* Securities Exchange Act Release No. 65771 (November 17, 2011), 76 FR 72472 (November 23, 2011) (SR–ISE–2011–60).

[6] ISE is permitted to list short term options ''on any option classes that are selected by other securities exchanges that employ a similar program under their respective rules.'' *See* Supplementary Material .02 to ISE Rule 504, and Supplementary Material .01 to ISE Rule 2009.

[7] 15 U.S.C. 78f(b).

[8] 15 U.S.C. 78f(b)(5).

price points will result in fractured liquidity.

B. Self-Regulatory Organization's Statement on Burden on Competition

The proposed rule change does not impose any burden on competition that is not necessary or appropriate in furtherance of the purposes of the Act.

C. Self-Regulatory Organization's Statement on Comments on the Proposed Rule Change Received From Members, Participants, or Others

The Exchange has not solicited, and does not intend to solicit, comments on this proposed rule change. The Exchange has not received any unsolicited written comments from members or other interested parties.

III. Date of Effectiveness of the Proposed Rule Change and Timing for Commission Action

Because the foregoing proposed rule change does not significantly affect the protection of investors or the public interest, does not impose any significant burden on competition, and, by its terms, does not become operative for 30 days from the date on which it was filed, or such shorter time as the Commission may designate, it has become effective pursuant to Section 19(b)(3)(A) of the Act [9] and Rule 19b–4(f)(6) thereunder.[10]

The Exchange has requested that the Commission waive the 30-day operative delay. The Commission believes that waiver of the operative delay is consistent with the protection of investors and the public interest because the proposal is substantially similar to those of other exchanges that have been approved by the Commission that permit such exchanges to select up to 30 classes to participate in their respective short term option series programs.[11] Therefore, the Commission designates the proposal operative upon filing.[12]

At any time within 60 days of the filing of the proposed rule change, the Commission summarily may temporarily suspend such rule change if it appears to the Commission that such action is necessary or appropriate in the public interest, for the protection of investors, or otherwise in furtherance of the purposes of the Act.

IV. Solicitation of Comments

Interested persons are invited to submit written data, views, and arguments concerning the foregoing, including whether the proposed rule change is consistent with the Act. Comments may be submitted by any of the following methods:

Electronic Comments

- Use the Commission's Internet comment form (*http://www.sec.gov/rules/sro.shtml*); or
- Send an email to *rule-comments@sec.gov.* Please include File Number SR–ISE–2012–08 on the subject line.

Paper Comments

- Send paper comments in triplicate to Elizabeth M. Murphy, Secretary, Securities and Exchange Commission, 100 F Street NE., Washington, DC 20549–1090.

All submissions should refer to File Number SR–ISE–2012–08. This file number should be included on the subject line if email is used. To help the Commission process and review your comments more efficiently, please use only one method. The Commission will post all comments on the Commission's Internet Web site (*http://www.sec.gov/rules/sro.shtml*). Copies of the submission, all subsequent amendments, all written statements with respect to the proposed rule change that are filed with the Commission, and all written communications relating to the proposed rule change between the Commission and any person, other than those that may be withheld from the public in accordance with the provisions of 5 U.S.C. 552, will be available for Web site viewing and printing in the Commission's Public Reference Room, 100 F Street NE., Washington, DC 20549, on official business days between the hours of 10 a.m. and 3 p.m. Copies of the filing also will be available for inspection and copying at the principal office of the Exchange. All comments received will be posted without change; the Commission does not edit personal identifying information from submissions. You should submit only information that you wish to make available publicly. All submissions should refer to File Number SR–ISE–2012–08 and should be submitted on or before March 19, 2012.

For the Commission, by the Division of Trading and Markets, pursuant to delegated authority.[13]

Kevin M. O'Neill,

Deputy Secretary.

[FR Doc. 2012–4420 Filed 2–24–12; 8:45 am]

BILLING CODE 8011–01–P

[9] 15 U.S.C. 78s(b)(3)(A).

[10] 17 CFR 240.19b–4(f)(6). In addition, Rule 19b–4(f)(6)(iii) requires the Exchange to give the Commission written notice of the Exchange's intent to file the proposed rule change, along with a brief description and text of the proposed rule change, at least five business days prior to the date of filing of the proposed rule change, or such shorter time as designated by the Commission. The Exchange has satisfied this requirement.

[11] *See supra* note 4.

[12] For purposes only of waiving the 30-day operative delay, the Commission has considered the proposed rule's impact on efficiency, competition, and capital formation. *See* 15 U.S.C. 78c(f).

[13] 17 CFR 200.30–3(a)(12).

SECURITIES AND EXCHANGE COMMISSION

[Release No. 34–66426; File No. SR–Phlx–2012–17]

Self-Regulatory Organizations; NASDAQ OMX PHLX LLC; Notice of Filing and Immediate Effectiveness of Proposed Rule Change Amending the Fee Schedule to Define a Market Maker

February 21, 2012.

Pursuant to Section 19(b)(1) of the Securities Exchange Act of 1934 (''Act'') [1], and Rule 19b–4 thereunder,[2] notice is hereby given that on February 7, 2012, NASDAQ OMX PHLX LLC (''Phlx'' or ''Exchange'') filed with the Securities and Exchange Commission (''SEC'' or ''Commission'') the proposed rule change as described in Items I, II, and III below, which Items have been prepared by the Exchange. The Commission is publishing this notice to solicit comments on the proposed rule change from interested persons.

I. Self-Regulatory Organization's Statement of the Terms of Substance of the Proposed Rule Change

The Exchange proposes to amend the Preface to its Fee Schedule to add a definition for a ''Market Maker.'' In addition, the Exchange proposes to delete outdated language in the Preface.

The text of the proposed rule change is available on the Exchange's Web site at *http://nasdaqtrader.com/micro.aspx?id=PHLXfilings,* at the principal office of the Exchange, and at the Commission's Public Reference Room.

II. Self-Regulatory Organization's Statement of the Purpose of, and Statutory Basis for, the Proposed Rule Change

In its filing with the Commission, the Exchange included statements concerning the purpose of and basis for the proposed rule change and discussed any comments it received on the proposed rule change. The text of these statements may be examined at the

[1] 15 U.S.C. 78s(b)(1).

[2] 17 CFR 240.19b–4.

places specified in Item IV below. The Exchange has prepared summaries, set forth in sections A, B, and C below, of the most significant aspects of such statements.

A. Self-Regulatory Organization's Statement of the Purpose of, and the Statutory Basis for, the Proposed Rule Change

1. Purpose

The purpose of this rule filing is to define the term ''Market Maker'' and utilize the term in describing certain market participants with respect to transaction fees. The Exchange believes that utilizing the term ''Market Maker'' as a category of market participant to describe transaction fees would further clarify the Fee Schedule.

The Exchange proposes to amend the Preface to the Fee Schedule to add language to define a ''Market Maker'' as a Specialist,[3] Registered Options Trader (''ROT''),[4] Streaming Quote Trader (''SQT''),[5] and Remote Streaming Quote Trader (''RSQT'').[6] The Exchange proposes to also amend the Fee Schedule to replace the market participant category of ''Specialists, ROTs, SQTs and RSQTs'' with the term ''Market Maker'' where transaction fees are specified. As currently noted in the Preface, while Directed Participants are Specialists and ROTs, including SQTs and RSQTs, and therefore Market Makers, they are assessed different transaction fees and are therefore not included in the definition of ''Market Maker'' for purposes of defining categories of market participants.

The Exchange also proposes to delete certain outdated language in the Preface which describes a ROT. The Exchange previously filed a rule change to eliminate a foreign currency options participant from the Exchange's Rules.[7] The Exchange is proposing to update footnote 7 in the Preface of the Fee Schedule to reflect the current text of Rule 1014 and eliminate the words ''or a foreign currency options participant.''

The Exchange also proposes to make other grammatical corrections to capitalize the word ''Specialist'' in the Fee Schedule.

2. Statutory Basis

The Exchange believes that its proposal to amend its Fee Schedule is consistent with Section 6(b) of the Act[8] in general, and furthers the objectives of Section 6(b)(4) of the Act[9] in particular, in that it is an equitable allocation of reasonable fees and other charges among Exchange members.

The Exchange believes that amending the Fee Schedule to describe Specialists, ROTs, SQTs and RSQTs as Market Makers is reasonable because other exchanges utilize the term Market Maker in their fee descriptions. Also, the Exchange believes that the proposal is equitable and not unfairly discriminatory because the Exchange is proposing to utilize a term that is known among its members to describe a fee category. Also, the Exchange's definition in the Preface provides guidance on how the term is being utilized in the Fee Schedule as are other market participant terms.

The Exchange believes that deleting outdated language is reasonable, equitable and not unfairly discriminatory as the text of the Fee Schedule would be consistent with other Rules.

B. Self-Regulatory Organization's Statement on Burden on Competition

The Exchange does not believe that the proposed rule change will impose any burden on competition not necessary or appropriate in furtherance of the purposes of the Act.

C. Self-Regulatory Organization's Statement on Comments on the Proposed Rule Change Received From Members, Participants, or Others

No written comments were either solicited or received.

III. Date of Effectiveness of the Proposed Rule Change and Timing for Commission Action

The foregoing rule change has become effective pursuant to Section 19(b)(3)(A)(ii) of the Act.[10] At any time within 60 days of the filing of the proposed rule change, the Commission summarily may temporarily suspend such rule change if it appears to the Commission that such action is necessary or appropriate in the public interest, for the protection of investors, or otherwise in furtherance of the purposes of the Act. If the Commission takes such action, the Commission shall institute proceedings to determine whether the proposed rule should be approved or disapproved.

IV. Solicitation of Comments

Interested persons are invited to submit written data, views, and arguments concerning the foregoing, including whether the proposed rule change is consistent with the Act. Comments may be submitted by any of the following methods:

Electronic Comments

- Use the Commission's Internet comment form (*http://www.sec.gov/rules/sro.shtml*); or
- Send an email to *rule-comments@sec.gov.* Please include File No. SR–Phlx–2012–17 on the subject line.

Paper Comments

- Send paper comments in triplicate to Elizabeth M. Murphy, Secretary, Securities and Exchange Commission, 100 F Street NE., Washington, DC 20549–1090.

All submissions should refer to File No. SR–Phlx–2012–17. This file number should be included on the subject line if email is used. To help the Commission process and review your comments more efficiently, please use only one method. The Commission will post all comments on the Commission's Internet Web site (*http://www.sec.gov/rules/sro.shtml*). Copies of the submission, all subsequent amendments, all written statements with respect to the proposed rule change that are filed with the Commission, and all written communications relating to the proposed rule change between the Commission and any person, other than those that may be withheld from the public in accordance with the provisions of 5 U.S.C. 552, will be available for Web site viewing and printing in the Commission's Public Reference Room, 100 F Street NE., Washington, DC 20549, on official business days between the hours of 10 a.m. and 3 p.m. Copies of such filing also will be available for inspection and copying at the principal office of the Exchange. All comments received will be posted without change; the Commission does not edit personal

[3] A Specialist is an Exchange member who is registered as an options specialist pursuant to Rule 1020(a).

[4] A Registered Option Trader is defined in Exchange Rule 1014(b) as a regular member of the Exchange located on the trading floor who has received permission from the Exchange to trade in options for his own account. A ROT includes SQTs and RSQTs as well as on and off-floor ROTs.

[5] An SQT is defined in Exchange Rule 1014(b)(ii)(A) as an ROT who has received permission from the Exchange to generate and submit option quotations electronically in options to which such SQT is assigned.

[6] A RSQT is defined in Exchange Rule 1014(b)(ii)(B) as an ROT that is a member or member organization with no physical trading floor presence who has received permission from the Exchange to generate and submit option quotations electronically in options to which such RSQT has been assigned.

[7] *See* Securities Exchange Act Release No. 64338 (April 25, 2011), 76 FR 24069 (April 25, 2011) (SR–Phlx–2011–13) (a rule change, which among other things, eliminates the foreign currency options participant from the Exchange's Rules).

[8] 15 U.S.C. 78f(b).

[9] 15 U.S.C. 78f(b)(4).

[10] 15 U.S.C. 78s(b)(3)(A)(ii).

identifying information from submissions. You should submit only information that you wish to make available publicly. All submissions should refer to File No. SR–Phlx–2012–17 and should be submitted on or before March 19, 2012.

For the Commission, by the Division of Trading and Markets, pursuant to delegated authority.[11]

Kevin M. O'Neill,

Deputy Secretary.

[FR Doc. 2012–4400 Filed 2–24–12; 8:45 am]

BILLING CODE 8011–01–P

[11] 17 CFR 200.30–3(a)(12).

SECURITIES AND EXCHANGE COMMISSION

[File No. 500–1]

PGI Energy, Inc.; Order of Suspension of Trading

February 23, 2012.

It appears to the Securities and Exchange Commission that there is a lack of current and accurate information concerning the securities of PGI Energy, Inc. f/k/a Tensas, Inc. (''PGI Energy'') because of questions regarding the accuracy and adequacy of representations by PGI Energy in press releases and other public statements concerning the company's business activities and contracts, and the nature and timing of a dividend the company announced to shareholders. PGI Energy is quoted on OTC Link operated by OTC Markets Group, Inc. under the ticker symbol ''PGIE.''

The Commission is of the opinion that the public interest and the protection of investors require a suspension of trading in the securities of the above-listed company.

Therefore, it is ordered, pursuant to Section 12(k) of the Securities Exchange Act of 1934, that trading in the securities of the above-listed company is suspended for the period from 9:30 a.m. EST, on February 23, 2012 through 11:59 p.m. EST, on March 7, 2012.

By the Commission.

Elizabeth M. Murphy,

Secretary.

[FR Doc. 2012–4618 Filed 2–23–12; 11:15 am]

BILLING CODE 8011–01–P

SECURITIES AND EXCHANGE COMMISSION

[File No. 500–1]

Jetronic Industries, Inc. (n/k/a New Bastion Development, Inc.), JMAR Technologies, Inc., Kolorfusion International, Inc. Legalopinion.com (n/k/a Drayton Richdale Corp.), Lifestream Technologies, Inc., Lions Petroleum, Inc., (n/k/a China Hongxing Agritech, Inc.), Luna Technologies International, Inc., Litewave Corp., MDI, Inc., and MobilePro Corp.; Order of Suspension of Trading

DATE: February 23, 2012.

It appears to the Securities and Exchange Commission that there is a lack of current and accurate information concerning the securities of Jetronic Industries, Inc. (n/k/a New Bastion Development, Inc.) because it has filed only two periodic reports since the period ended January 31, 2000.

It appears to the Securities and Exchange Commission that there is a lack of current and accurate information concerning the securities of JMAR Technologies, Inc. because it has not filed any periodic reports since the period ended September 30, 2008.

It appears to the Securities and Exchange Commission that there is a lack of current and accurate information concerning the securities of Kolorfusion International, Inc. because it has not filed any periodic reports since September 30, 2008.

It appears to the Securities and Exchange Commission that there is a lack of current and accurate information concerning the securities of Legalopinion.com (n/k/a Drayton Richdale Corp.) because it has not filed any periodic reports from the period ended December 31, 2000 through the period ended December 31, 2008, or from the period ended June 30, 2009 through the period ended September 30, 2010.

It appears to the Securities and Exchange Commission that there is a lack of current and accurate information concerning the securities of Lifestream Technologies, Inc. because it has not filed any periodic reports since the period ended March 31, 2006.

It appears to the Securities and Exchange Commission that there is a lack of current and accurate information concerning the securities of Lions Petroleum, Inc. (n/k/a China Hongxing Agritech, Inc.) because it has not filed any periodic reports since the period ended December 31, 2007.

It appears to the Securities and Exchange Commission that there is a lack of current and accurate information concerning the securities of Luna Technologies International, Inc. because it has not filed any periodic reports since the period ended September 30, 2006.

It appears to the Securities and Exchange Commission that there is a lack of current and accurate information concerning the securities of Litewave Corp. because it has not filed any periodic reports since the period ended September 30, 2009.

It appears to the Securities and Exchange Commission that there is a lack of current and accurate information concerning the securities of MDI, Inc. because it has not filed any periodic reports since the period ended September 30, 2009.

It appears to the Securities and Exchange Commission that there is a lack of current and accurate information concerning the securities of MobilePro Corp. because it has not filed any periodic reports since the period ended March 31, 2009.

The Commission is of the opinion that the public interest and the protection of investors require a suspension of trading in the securities of the above-listed companies.

Therefore, it is ordered, pursuant to Section 12(k) of the Securities Exchange Act of 1934, that trading in the securities of the above-listed companies is suspended for the period from 9:30 a.m. EST on February 23, 2012, through 11:59 p.m. EST on March 7, 2012.

By the Commission.

Jill M. Peterson,

Assistant Secretary.

[FR Doc. 2012–4619 Filed 2–23–12; 8:45 am]

BILLING CODE 8011–01–P

SMALL BUSINESS ADMINISTRATION

Data Collection Available for Public Comments and Recommendations

ACTION: 60-Day notice and request for comments. 8(a) Business Development Program.

SUMMARY: In accordance with the Paperwork Reduction Act of 1995, this notice announces the Small Business Administration's intentions to request approval on a new and/or currently approved information collection.

DATES: Submit comments on or before April 27, 2012.

ADDRESSES: Send all comments regarding whether this information collection is necessary for the proper performance of the function of the agency, whether the burden estimates

are accurate, and if there are ways to minimize the estimated burden and enhance the quality of the collection, to Sandra Johnston, Program Analyst, Office of Financial Assistance, Small Business Administration, 409 3rd Street, 7th Floor, Washington, DC 20416.

FOR FURTHER INFORMATION CONTACT: Sandra Johnston, Program Analyst, 202–205–7528, *Sandra.johnston@sba.gov* Curtis B. Rich, Management Analyst, 202–205–7030, *curtis.rich@sba.gov.*

SUPPLEMENTARY INFORMATION: The servicing agent agreement is executed by the borrower, certified development company and the loan servicing agent. The agreement is primarily used to certify use of loan proceeds, appoint a servicing agent and acknowledge the imposition of various fees.

Title: ''Servicing Agent Agreement''.

Description of Respondents: Certified Development Companies and SBA Borrowers.

Form Number: N/A.

Annual Responses: 7,830.

Annual Burden: 7,830.

Jacqueline White,

Chief, Administrative Information Branch.

[FR Doc. 2012–4388 Filed 2–24–12; 8:45 am]

BILLING CODE ;P

SMALL BUSINESS ADMINISTRATION

[License No. 03/03–0247]

Solutions Capital I, L.P.; Notice Seeking Exemption Under the Small Business Investment Act, Conflicts of Interest

Notice is hereby given that Solutions Capital I, L.P., 1100 Wilson Blvd., Suite 3000, Arlington, VA 22209, a Federal Licensee under the Small Business Investment Act of 1958, as amended (''the Act''), in connection with the financing of a small concern, has sought an exemption under § 312 of the Act and § 107.730, Financings which constitute conflicts of interest, of the Small Business Administration Rules and Regulations (13 CFR 107). Solutions Capital I, L.P., proposes to acquire debt financing from MCG Capital Corporation in Advanced Sleep Concepts, Inc., 195 Chatillon Road NE., Rome, GA, 30162. The financing is contemplated to provide growth capital for the company.

The financing is brought within the purview of § 107.730(a) of the Regulations because MCG Capital Corporation, an Associate of Solutions Capital I, L.P., has a greater than 10% equity interest in Advanced Sleep Concepts, Inc., thereby making Advanced Sleep Concepts, Inc., an Associate of Solutions Capital I, L.P., as defined in § 107.50 of the Regulations.

Notice is hereby given that any interested person may submit written comments on the transaction to the Associate Administrator for Investment, U.S. Small Business Administration, 409 Third Street SW., Washington, DC 20416.

Sean J. Greene,

Associate Administrator for Investment and Innovation.

[FR Doc. 2012–4391 Filed 2–24–12; 8:45 am]

BILLING CODE P

DEPARTMENT OF TRANSPORTATION

Office of the Secretary

Additional Guidance on Airfare/Air Tour Price Advertisements

AGENCY: Office of the Secretary, Department of Transportation.

ACTION: Notice providing additional guidance on airfare/air tour price advertisements.

SUMMARY: The Department is publishing the following notice providing additional guidance on airfare/air tour price advertisements.

FOR FURTHER INFORMATION CONTACT: Nicholas Lowry, Attorney, Office of Aviation Enforcement and Proceedings (C–70), 1200 New Jersey Ave. SE., Washington, DC 20590, (202) 366–9349.

Additional Guidance on Airfare/Air Tour Price Advertisements

This notice provides additional guidance to airlines and ticket agents that market prices for air transportation, air tours, or tour components in connection with air transportation regarding the full fare advertising rule. It describes several airline and ticket agent practices that the Office of Aviation Enforcement and Proceedings (Enforcement Office) considers to violate section 399.84 and/or to be unfair and deceptive and/or an unfair method of competition in violation of 49 U.S.C. 41712. The purpose of this notice is to urge voluntary compliance by airlines and ticket agents and to announce the office's intention to pursue enforcement action where it discovers such practices, as appropriate.

Separate Listing of Taxes and Carrier Fees

If a vendor chooses to make available information regarding the amount of taxes and/or fees that are included in the full fare, the disclosure must accurately distinguish between taxes and government fees on the one hand and carrier-imposed fees on the other. In addition, with respect to information about carrier-imposed fees included in the full fare, such disclosure must accurately represent the actual cost of the item for which the charge is assessed and must not otherwise be deceptive.

Under past policy that expired on January 25, 2012, fare advertisements were permitted to state, separately from the base fare, government fees and charges that were not *ad valorem* in nature. Carrier-imposed charges, such as fuel or security surcharges, had to be included in the base fare initially presented to consumers on Web site displays, but carriers were allowed to break out these charges, along with all government taxes and fees, in subsequent screens or through pop-ups or hyperlinks. We have found, in reviewing airline Web sites, that many Web sites which detailed additional fees labeled all additional charges, government and carrier-imposed, as taxes when in fact carrier-imposed fees were often the major portion of these fees. Such displays were deceptive and in violation of section 41712.

The Department's new consumer rule, ''Enhancing Airline Passenger Protections,'' 76 FR 23110 (Apr. 25, 2011), requires, among other things, that the first price quote presented must be the full price, including all taxes, fees and all carrier surcharges. This full price provision became effective January 26, 2012. In response to concerns expressed by carriers, the Department made clear in the preamble to the rule that advertisers are free to advise the public in price solicitations about government taxes and fees as well as carrier- or agent-imposed fees that are included within the single total price, so long as that notice is not deceptive. For example, as we explained in the final rule, sellers of air transportation may have pop-ups or links adjacent to an advertised price to take the consumer to a listing of such charges, or they may display these charges on the same page in a less prominent manner than the total price if they prefer.[1] In particular, the Department noted that any such charges must be displayed on a per-passenger basis, accurately reflect the actual costs of the service covered, and not otherwise be deceptive. (14 CFR 399.84, 76 FR 23110, 23143). When a cost component is described as a fuel surcharge, for example, that amount

[1] See also Office of Aviation Enforcement and Proceedings, DOT, Answers to Frequently Asked Questions, at 22 (Aug 19, 2011, revised Sept. 6, 2011, and Oct 19, 2011), available at *http://airconsumer.ost.dot.gov/rules/EAPP_22_FAQ_10–19–2011.pdf.*

must actually reflect a reasonable estimate of the per-passenger fuel costs incurred by the carrier above some baseline calculated based on such factors as the length of the trip, varying costs of fuel, and number of flight segments involved.[2] Another example of a solicitation likely to deceive and therefore prohibited under the rule is a presentation of a fare as a ''total'' fare if it does not include government taxes and fees or other mandatory charges.

It has come to our attention that some carriers and ticket agents are providing notice of the cost components of airfares on their Web site reservations systems in ways that are unfair and deceptive in violation of section 41712. In some instances, the advertiser appears to properly include government taxes and fees, as well as mandatory carrier- or agent-imposed fees, in the initial fare quotations and itinerary selections. However, on the page confirming the itinerary selection, or on the fare quotation purchase page, where component costs are displayed, a general category contains costs described as ''Taxes'' or ''Taxes incl 9/11 fee'' that actually include a carrier's ''fuel surcharge'' and/or other fees not imposed by a government. In one particular example, the total fare for a U.S–Europe trip appears to be properly listed as $769.41 on the initial itinerary pages, but the confirming page describes the total as being composed of a ''Price'' of $170 and ''Taxes incl 9/11 fee'' of $599.41. A further description of the ''Taxes incl 9/11 fee'' discloses that the amount of $599.41 includes an amount of $476 described as a ''fuel surcharge'' and an amount of $33.78 described as a ''Passenger service charge international.'' These charges are not government-imposed taxes and fees, and it is an unfair and deceptive practice and an unfair method of competition in violation of section 41712 to lead consumers to believe that they are.[3]

In another example of non-government charges being included in an amount described as ''taxes,'' advertisers present a category described as ''taxes and fees'' where the amount in that category includes not only government-imposed taxes and fees but carrier- or agent-imposed fees, the latter of which may include ''fuel surcharges,'' ''convenience'' fees, or other mandatory fees. Combining government-imposed taxes and fees with those imposed by carriers or agents is likely to confuse consumers and deceive them into believing the government taxes and fees associated with their airfare are higher than they actually are. Therefore, advertisers who desire to separately list government taxes and fees as well as carrier- or agent-imposed fees should ensure that they are not lumped together and described as ''taxes and fees.'' Language such as ''Taxes and carrier-imposed fees'' would be acceptable, for example.

Moreover, using the particular example noted above, we wish to remind carriers that amounts listed as charges for particular services must accurately reflect the actual costs of the service covered. Therefore, the ''fuel surcharge'' of $476 in the above example, which is associated with a transatlantic trip originating in New York City, must be an accurate reflection of the fuel cost over some reasonable baseline for an individual passenger for that trip and the carrier should be prepared to detail the services and costs per passenger associated with its ''Passenger service charge international.''

In a similar vein, we have observed that carriers may add ''fuel surcharges'' or other fees to their frequent flyer ticket offerings, some in an amount of several hundred dollars. Any such charges assessed also must be fairly disclosed and an accurate reflection of the actual costs as described above.

Advertising Each-Way Fares Based on a Roundtrip Purchase

Under section 399.84(b), airlines and ticket agents are permitted to advertise airfares on an each-way basis when a roundtrip purchase is required provided that the roundtrip-purchase requirement is clearly and conspicuously noted in the advertisement and is stated prominently and proximately to the each-way fare amount. The Department has historically allowed the marketing of each-way fares because it facilitates the pricing and sale of ''open jaw'' itineraries (outbound flights to one city and return flights from a different one, e.g. Washington to Amsterdam with the return flight from Paris to Washington). Such marketing also can provide consumers better fare information where different prices exist for outbound and return flights because one is in the high season or on a weekend and the other flight is not.

In the past, we have noted understandable variations in the price of outbound and return flights sold on an each-way basis. For example, fares could vary based on whether the travel was during high, low or shoulder seasons, whether it was on a weekend or a weekday or whether it was on flights during peak holiday periods or on other busy travel days. Fares also could vary depending on the number of segment-related taxes and government fees that might apply and for international travel the varying U.S. and foreign arrival and connecting point taxes and government fees that might apply. Until recently the variation in each-way fares by direction was not a regulatory concern.

Subsequent to the January 26, 2012, effective date of the full fare advertising rule we observed that one carrier was offering outbound each-way fares to European points that appeared to be deceptively low in comparison to the return flight fares. In one case an outbound Washington to Paris fare on February 22, 2012, was advertised at $102 with a return flight on February 29, 2012, advertised at $629 or more than 600% higher. Even more troubling, a seat on the same February 29 flight was being offered for only $233 if it was bought as part of a Paris-originating roundtrip to Washington. The only reasonable explanation for such variations is that the carrier intended to bait the passenger with an unrealistically low outbound fare and to induce passengers to buy the roundtrip ticket at a substantially higher price than any reasonable person would expect at the beginning of the search process. We view such tactics as being unfair and deceptive and amounting to an unfair method of competition.

The requirements and guidance discussed above, it should be noted, extend to travel agents and other non-airline vendors of air transportation. Questions regarding this notice may be addressed to the Office of Aviation Enforcement and Proceedings (C–70), 400 7th St. SW., Washington, DC 20590. The office will provide those subject to the full fare advertising rule and 49 U.S.C. 41712 60 days subsequent to the date of this notice to ensure they are in compliance before instituting enforcement action related to the issues covered in this notice.

An electronic version of this document is available at http://www.regulations.gov.

[2] For example, descriptions such as the following would be acceptable: ''Fare includes a fuel surcharge. On average our passengers paid $xx.xx more for fuel during 2011 in their ticket price than they did in 2000;'' or ''Fares include a charge for fuel. On average in 2011 our passengers paid $xx.xx for fuel as a part of their ticket price.'' Of course, such assertions must be based on the carrier's actual paid enplanements and fuel expenditures.

[3] We note that section 1104 of the FAA Modernization and Reform Act of 2012, Public Law 112–94, 126 Stat.11 (2012), includes an amendment to the tax code that also may bear on what may be included under a breakout of taxes in airfare advertising.

Dated: February 21, 2012.

Samuel Podberesky,

Assistant General Counsel for Aviation Enforcement and Proceedings.

[FR Doc. 2012–4546 Filed 2–24–12; 8:45 am]

BILLING CODE 4910–9X–P

DEPARTMENT OF TRANSPORTATION

Federal Aviation Administration

Executive Committee of the Aviation Rulemaking Advisory Committee; Meeting

AGENCY: Federal Aviation Administration (FAA), DOT.

ACTION: Notice of meeting.

SUMMARY: The FAA is issuing this notice to advise the public of a meeting of the Executive Committee of the Aviation Rulemaking Advisory Committee.

DATES: The meeting will be held on March 29, 2012, at 1 p.m.

ADDRESSES: The meeting will take place at the Federal Aviation Administration, 800 Independence Avenue SW., Washington, DC 20591, 10th floor, MacCracken Room.

FOR FURTHER INFORMATION CONTACT: Renee Butner, Federal Aviation Administration, 800 Independence Avenue SW., Washington, DC 20591, telephone (202) 267–5093; fax (202) 267–5075; email *Renee.Butner@faa.gov*.

SUPPLEMENTARY INFORMATION: Under section 10(a)(2) of the Federal Advisory Committee Act (5 U.S.C. App. 2), we are giving notice of a meeting of the Executive Committee of the Aviation Rulemaking Advisory Committee taking place on March 29, 2012, at the Federal Aviation Administration, 800 Independence Avenue SW., Washington, DC 20591. The Agenda includes:

1. Commercial Air Tour Voluntary Accreditation Program Working Group.
2. ARAC restructure:
a. Draft charter and bylaws.
b. Committee Manual revision—Process Improvement Working Group (PIWG) recommendations.
3. Status Report from FAA on Rulemaking Prioritization Working Group (RPWG) recommendations.
4. Status Reports from Assistant Chairs.
5. Remarks from other EXCOM members.

Attendance is open to the interested public but limited to the space available. The FAA will arrange teleconference service for individuals wishing to join in by teleconference if we receive notice by March 20. Arrangements to participate by teleconference can be made by contacting the person listed in the **FOR FURTHER INFORMATION CONTACT** section. Callers outside the Washington metropolitan area are responsible for paying long-distance charges.

The public must arrange by March 20 to present oral statements at the meeting. The public may present written statements to the executive committee by providing 25 copies to the Executive Director, or by bringing the copies to the meeting.

If you are in need of assistance or require a reasonable accommodation for this meeting, please contact the person listed under the heading **FOR FURTHER INFORMATION CONTACT**.

Issued in Washington, DC, on February 17, 2012.

Pamela A. Hamilton-Powell,

Executive Director, Aviation Rulemaking Advisory Committee.

[FR Doc. 2012–4539 Filed 2–24–12; 8:45 am]

BILLING CODE 4910–13–P

DEPARTMENT OF TRANSPORTATION

Federal Transit Administration

[FTA Docket No. FTA–2012–0016]

Notice of Request for the Extension of a Currently Approved Information Collection

AGENCY: Federal Transit Administration (FTA), DOT.

ACTION: Notice of Request for Comments.

SUMMARY: In accordance with the Paperwork Reduction Act of 1995, this notice announces the intention of the Federal Transit Administration (FTA) to request the Office of Management and Budget (OMB) to approve the following information collection: Transit Safety Survey.

DATES: Comments must be submitted before April 27, 2012.

ADDRESSES: To ensure that your comments are not entered more than once into the docket, submit comments identified by the docket number by only one of the following methods:

1. *Web site: www.regulations.gov.* Follow the instructions for submitting comments on the U.S. Government electronic docket site. (**Note:** The U.S. Department of Transportation's (DOT's) electronic docket is no longer accepting electronic comments.) All electronic submissions must be made to the U.S. Government electronic docket site at *www.regulations.gov.* Commenters should follow the directions below for mailed and hand-delivered comments.
2. *Fax:* 202–366–7951.
3. *Mail:* U.S. Department of Transportation, 1200 New Jersey Avenue SE., Docket Operations, M–30, West Building, Ground Floor, Room W12–140, Washington, DC 20590–0001.
4. *Hand Delivery:* U.S. Department of Transportation, 1200 New Jersey Avenue SE., Docket Operations, M–30, West Building, Ground Floor, Room W12–140, Washington, DC 20590–0001 between 9 a.m. and 5 p.m., Monday through Friday, except federal holidays.

Instructions: You must include the agency name and docket number for this notice at the beginning of your comments. Submit two copies of your comments if you submit them by mail. For confirmation that FTA has received your comments, include a self-addressed stamped postcard. Note that all comments received, including any personal information, will be posted and will be available to Internet users, without change, to *www.regulations.gov.* You may review DOT's complete Privacy Act Statement in the **Federal Register** published April 11, 2000, (65 FR 19477), or you may visit *www.regulations.gov.*

Docket: For access to the docket to read background documents and comments received, go to *www.regulations.gov* at any time. Background documents and comments received may also be viewed at the U.S. Department of Transportation, 1200 New Jersey Avenue SE., Docket Operations, M–30, West Building, Ground Floor, Room W12–140, Washington, DC 20590–0001 between 9 a.m. and 5 p.m., Monday through Friday, except federal holidays.

FOR FURTHER INFORMATION CONTACT: Roy Chen, FTA Office of Technology, (202) 366–0462, or email: *royweishun.chen@dot.gov.*

SUPPLEMENTARY INFORMATION: Interested parties are invited to send comments regarding any aspect of this information collection, including: (1) The necessity and utility of the information collection for the proper performance of the functions of the FTA; (2) the accuracy of the estimated burden; (3) ways to enhance the quality, utility, and clarity of the collected information; and (4) ways to minimize the collection burden without reducing the quality of the collected information. Comments submitted in response to this notice will be summarized and/or included in the request for OMB approval of this information collection.

Title: Transit Safety Survey (*OMB Number: 2132–New).*

Background: The survey covered in this request will provide FTA with a

means to gather data directly from its stakeholders. The information obtained from the survey will be used to improve transit safety research with long-term goals of improving public transit safety and reducing risk for transit properties, transit passengers, and the public in general. The survey will be limited to data collections that solicit voluntary opinions to enable us to effectively address transit safety issue areas, identify safety trends, and structure a responsive and proactive research agenda for FTA.

Respondents: Public and private transit operators, transit constituents, and other stakeholders.

Estimated Annual Burden on Respondents: 20 minutes for each of the 800 respondents.

Estimated Total Annual Burden: 266 hours.

Frequency: Every two years.

Issued: February 21, 2012.

Ann M. Linnertz,

Associate Administrator for Administration.

[FR Doc. 2012–4383 Filed 2–24–12; 8:45 am]

BILLING CODE 4910–57–P

DEPARTMENT OF TRANSPORTATION

National Highway Traffic Safety Administration

[U.S. DOT Docket Number NHTSA–2011–0169]

Reports, Forms, and Recordkeeping Requirements

AGENCY: National Highway Traffic Safety Administration (NHTSA), Department of Transportation.

ACTION: Request for public comment on proposed collection and consolidation of existing collection of information.

SUMMARY: Before a Federal agency can collect certain information from the public, it must receive approval from the Office of Management and Budget (OMB). Under procedures established by the Paperwork Reduction Act of 1995, before seeking OMB approval, Federal agencies must solicit public comment on proposed collections of information, including extension, reinstatement and consolidation of previously approved collections.

This document describes a new collection of information for which NHTSA intends to seek OMB approval concerning recommendations from vehicle manufacturers regarding child restraint systems (CRS) that fit in their individual vehicles. Furthermore, NHTSA plans to combine the new information collection with an existing collection for obtaining vehicle information for consumer information purposes (OMB Control number 2127–0629).

DATES: Comments must be received on or before April 27, 2012.

ADDRESSES: You may submit comments to the docket number identified in the heading of this document by any of the following methods:

- *Federal eRulemaking Portal:* Go to *http://www.regulations.gov.* Follow the online instructions for submitting comments.
- *Mail:* Docket Management Facility, M–30, U.S. Department of Transportation, West Building, Ground Floor, Rm. W12–140, 1200 New Jersey Avenue SE., Washington, DC 20590.
- *Hand Delivery or Courier:* West Building Ground Floor, Room W12–140, 1200 New Jersey Avenue SE., between 9 a.m. and 5 p.m. Eastern Time, Monday through Friday, except Federal holidays.
- *Fax:* (202) 493–2251.

You may call the Docket Management Facility at 202–366–9826.

Instructions: For detailed instructions on submitting comments, see the Public Participation heading of the Supplementary Information section of this document. Note that all comments received will be posted without change to *http://www.regulations.gov*, including any personal information provided.

FOR FURTHER INFORMATION CONTACT: Complete copies of each request for collection of information may be obtained at no charge from Johanna Lowrie, U.S. Department of Transportation, NHTSA, Room W43–410, 1200 New Jersey Ave. SE., Washington, DC 20590. Ms. Lowrie's telephone number is (202) 366–5269. Please identify the relevant collection of information by referring to its OMB Control Number.

SUPPLEMENTARY INFORMATION: Under the Paperwork Reduction Act of 1995, before an agency submits a proposed collection of information to OMB for approval, it must first publish a document in the **Federal Register** providing a 60-day comment period and otherwise consult with members of the public and affected agencies concerning each proposed collection of information. The OMB has promulgated regulations describing what must be included in such a document. Under OMB's regulation at 5 CFR 1320.8(d), an agency must ask for public comment on the following:

(i) Whether the proposed collection of information is necessary for the proper performance of the functions of the agency, including whether the information will have practical utility;

(ii) The accuracy of the agency's estimate of the burden of the proposed collection of information, including the validity of the methodology and assumptions used;

(iii) How to enhance the quality, utility and clarity of the information to be collected;

(iv) How to minimize the burden of the collection of information on those who are to respond, including the use of appropriate automated, electronic, mechanical, or other technological collection techniques or other forms of information technology (e.g., in submission of responses).

In compliance with these requirements, NHTSA asks for public comment on the additional information the agency is proposing to collect under the existing collection of information:

Title: Consolidated Vehicle Information for the General Public.

OMB Control Number: 2127–0629.

Affected Public: Manufacturers that sell motor vehicles under 10,000 pounds in the United States.

Abstract: NHTSA's mission is to save lives, prevent injury and reduce motor vehicle crashes. Consumer information programs are an important tool for improving vehicle safety through market forces and providing caregivers information about child seats that fit in their vehicles.

On February 25, 2011, NHTSA published in the **Federal Register** a ''Request for comments'' notice (76 FR 10637) describing in detail a new consumer information program, as part of the New Car Assessment Program, to help parents and caregivers find a child restraint system (''child safety seat'') that fits their vehicle. Under the new program, NHTSA will make available on the agency's Web site, *www.safercar.gov*, information from vehicle manufacturers as to the specific child safety seats the manufacturers recommend for individual vehicles. NHTSA also plans to use these recommendations when responding to public inquiries. The agency anticipates that this new program will provide consumer service by offering guidance on vehicle-CRS matchups and making it easier for parents and caregivers to select a child safety seat that fits in their vehicle.

The agency has attempted to coordinate and reduce the reporting burden associated with this new information collection effort by incorporating the new provisions into the currently approved collection, ''Vehicle Information for the General Public'' (OMB Control Number 2127–0629). For over 30 years, NHTSA has been providing consumers with vehicle

safety information such as frontal and side crash results, rollover propensity and the availability of a wide array of safety features provided on each vehicle model. In addition, the agency has been using this safety feature information when responding to consumer inquiries and analyzing rulemaking petitions that requested the agency to mandate certain safety features.

NHTSA also has an information collection to obtain data related to motor vehicle compliance with the agency's Federal motor vehicle safety standards. Although the consumer information collection data is distinct and unique from this compliance data, respondents to both collections are the same. Thus, the consumer information collection procedure is closely coordinated with the compliance collection to enable responders to assemble the data more efficiently. The burden is further eased by sending the respondents electronic forms that they complete and electronically return to the agency. For the expansion of the information collection to include CRS recommendations, the agency asks that respondents provide a list of child safety seats that fit in their vehicles at the same time they supply the vehicle safety information to further minimize the burden. The following table provides the estimated annual burden hours, assuming full participation in the program.

	Vehicle safety information	Vehicle-CRS fit information	Total
Estimated Annual Burden Hours	800	3600	4400
Number of Respondents	21	21	21

The combined consumer information collected will be used on the agency's *www.safercar.gov* Web site, in the ''Purchasing with Safety in Mind: What to look for when buying a new vehicle'' and ''Buying a Safer Car for Child Passengers'' brochures, in other consumer publications, as well as for internal agency analyses and response to consumer inquiries.

Comments are invited on (1) whether the proposed collection of information is necessary for the proper performance of the functions of the Department, including whether the information will have practical utility, (2) the accuracy of the Department's estimate of the burden of the proposed information collection, (3) ways to enhance the quality, utility and clarity of the information to be collected, and (4) ways to minimize the burden of the collection of information on respondents, including the use of automated collection techniques or other forms of information technology.

Public Participation

How do I prepare and submit comments?

Your comments must be written and in English. To ensure that your comments are correctly filed in the Docket, you must include the docket number of this document in your comments. Your comments must not be more than 15 pages long.[1] We established this limit to encourage you to write your primary comments in a concise fashion. However, you may attach additional documents (if necessary) to your comments. There is no limit on the length of the attachments.

If you are submitting comments electronically as a PDF (Adobe) file, we ask that the documents submitted be scanned using the Optical Character Recognition (OCR) process, thus allowing the agency to search and copy certain portions of your submissions.[2]

Please note that pursuant to the Data Quality Act, in order for substantive data to be relied upon and used by the agency, it must meet the information quality standards set forth in the OMB and DOT Data Quality Act guidelines. Accordingly, we encourage you to consult the guidelines in preparing your comments. OMB's guidelines may be accessed at: *http://www.whitehouse.gov/omb/fedreg/reproducible.html.* DOT's guidelines may be accessed at: *http://dmses.dot.gov/submit/DataQualityGuidelines.pdf.*

How can I be sure that my comments were received?

If you submit your comments by mail and wish Docket Management to notify you upon its receipt of your comments, you may enclose a self-addressed, stamped postcard in the envelope containing your comments. Upon receiving your comments, Docket Management will return the postcard by mail.

How do I submit confidential business information?

If you wish to submit any information under a claim of confidentiality, you should submit three copies of your complete submission, including the information you claim to be confidential business information, to the Chief Counsel, NHTSA, at the address given above under **FOR FURTHER INFORMATION CONTACT**. When you send a comment containing information claimed to be confidential business information, you should include a cover letter setting forth the information specified in our confidential business information regulation.[3]

In addition, you should submit a copy, from which you have deleted the claimed confidential business information, to the Docket by one of the methods set forth above.

Will the agency consider late comments?

We will consider all comments received before the close of business on the comment closing date indicated above under **DATES**. To the extent possible, we will also consider comments received after that date.

How can I read the comments submitted by other people?

You may read the materials placed in the Docket for this document (e.g., the comments submitted in response to this document by other interested persons) at any time by going to *http://www.regulations.gov.* Follow the online instructions for accessing the dockets. You may also read the materials at the Docket Management Facility by going to the street address given above under **ADDRESSES**. The Docket Management Facility is open between 9 a.m. and 5 p.m. Eastern Time, Monday through Friday, except Federal holidays.

Authority: 44 U.S.C. 3506(c); delegation of authority at 49 CFR 1.50.

Issued on: February 17, 2012.

Christopher J. Bonanti,

Associate Administrator for Rulemaking.

[FR Doc. 2012–4367 Filed 2–24–12; 8:45 am]

BILLING CODE 4910–59–P

[1] See 49 CFR 553.21.

[2] Optical character recognition (OCR) is the process of converting an image of text, such as a scanned paper document or electronic fax file, into computer-editable text.

[3] See 49 CFR 512.

DEPARTMENT OF TRANSPORTATION

National Highway Traffic Safety Administration

[Docket No. NHTSA–2011–0154]

Reports, Forms, and Recordkeeping Requirements

AGENCY: National Highway Traffic Safety Administration, Department of Transportation.

ACTION: Notice.

SUMMARY: In compliance with the Paperwork Reduction Act of 1995 (44 U.S.C. 3501 et seq.), this notice announces that the Information Collection Request (ICR) abstracted below has been forwarded to the Office of Management and Budget (OMB) for review and comment. The ICR describes the nature of the information collections and their expected burden. The **Federal Register** Notice with a 60-day comment period was published on November 25, 2011 (76 FR 72747). No comments were received.

This document describes a collection of information on nine Federal motor vehicle safety standards (FMVSSs) and two regulations, for which NHTSA intends to seek OMB approval. The information collection pertains to requirements that specify certain safety precautions regarding items of motor vehicle equipment that must appear in the vehicle owner's manual.

DATES: Comments must be submitted on or before March 28, 2012.

FOR FURTHER INFORMATION CONTACT: Lou Molino, the National Highway Traffic Safety Administration, Office of Rulemaking (NVS–112), (202) 366–1740, 1200 New Jersey Avenue W43–311 Washington, DC 20590.

SUPPLEMENTARY INFORMATION: National Highway Traffic Safety Administration.

Title: Consolidated Vehicle Owner's Manual Requirements for Motor Vehicles and Motor Vehicle Equipment.

OMB Number: 2127–0541.

Type of Request: Extension of a currently approved collection.

Abstract: In order to ensure that manufacturers are complying with the FMVSSs and regulations, NHTSA requires a number of information collections in FMVSS Nos. 108, 110, 138, 202, 205, 208, 210, 213 and 226, and Part 575 Sections 103 and 105.

FMVSS No. 108, ''Lamps, reflective devices and associated equipment.'' This standard requires that certain lamps and reflective devices with certain performance levels be installed on motor vehicles to assure that the roadway is properly illuminated, vehicles can be readily seen, and the signals can be transmitted to other drivers sharing the road, during day, night and inclement weather. Since the specific manner in which headlamp aim is to be performed is not regulated (only the performance of the device is), aiming devices manufactured or installed by different vehicle and headlamp manufacturers may work in significantly different ways. As a consequence, to assure that headlamps can be correctly aimed, instructions for proper use must be part of the vehicle as a label, or optionally, in the vehicle owner's manual.

FMVSS No. 110, ''Tire selection and rims.'' This standard specifies requirements for tire selection to prevent tire overloading. The vehicle's normal load and maximum load on the tire shall not be greater than applicable specified limits. The standard requires a permanently affixed vehicle placard specifying vehicle capacity weight, designated seating capacity, manufacturer recommended cold tire inflation pressure and manufacturer's recommended tire size. The standard further specifies rim construction requirements, load limits of non-pneumatic spare tires and labeling requirements for non-pneumatic spare tires, including a required placard. Owner's manual information is required for ''Use of Spare Tire.'' FMVSS No. 110 will require additional owner's manual information on the revised vehicle placard and tire information label, on the revised tire labeling, and on the tire safety and load limits and terminology.

FMVSS No. 138, ''Tire pressure monitoring systems.'' This standard specifies requirements for a tire pressure monitoring system to warn the driver of an under-inflated tire condition. Its purpose is to reduce the likelihood of a vehicle crash resulting from tire failure due to operation in an under-inflated condition. The standard requires the Owner's Manual to include specific information on the low pressure warning telltale and the malfunction indicator telltale.

FMVSS No. 202, ''Head restraints.'' This standard specifies requirements for head restraints. The standard, which seeks to reduce whiplash injuries in rear collisions, currently requires head restraints for front outboard designated seating positions in passenger cars and in light multipurpose passenger vehicles, trucks and buses. In a final rule published on December 14, 2004 (69 FR 74880), the standard requires that vehicle manufacturers include information in owner's manuals for vehicles manufactured on or after September 1, 2008. The owner's manual must clearly identify which seats are equipped with head restraints. If the head restraints are removable, the owner's manual must provide instructions on how to remove the head restraint by a deliberate action distinct from any act necessary for adjustment, and how to reinstall head restraints. The owner's manual must warn that all head restraints must be reinstalled to properly protect vehicle occupants. Finally, the owner's manual must describe, in an easily understandable format, the adjustment of the head restraints and/or seat back to achieve appropriate head restraint position relative to the occupant's head.

FMVSS No. 205, ''Glazing materials.'' This standard specifies requirement for all glazing material used in windshields, windows and interior partitions of motor vehicles. Its purpose is to reduce the likelihood of lacerations and to minimize the possibility of occupants penetrating the windshield in a crash. More detailed information regarding the care and maintenance of such glazing items, as the glass-plastic windshield, is required to be placed in the vehicle owner's manual.

FMVSS No. 208, ''Occupant crash protection.'' This standard specifies requirements for both active and passive occupant crash protection systems for passenger cars, multipurpose passenger vehicles, trucks and small buses. Certain safety features, such as air bags, or the care and maintenance of air bag systems, are required to be explained to the owner by means of the owner's manual. For example, the owner's manual must describe the vehicle's air bag system and provide precautionary information about the proper positioning of the occupants, including children. The vehicle owner's manual must also warn that no objects, such as shotguns carried in police cars, should be placed over or near the air bag covers.

FMVSS No. 210, ''Seat belt assembly anchorages.'' This standard specifies requirements for seat belt assembly anchorages to ensure effective occupant restraint and to reduce the likelihood of failure in a crash. The standard requires that manufacturers place the following information in the vehicle owner's manual: a. An explanation that child restraints are designed to be secured by means of the vehicle's seat belts, and, b. A statement alerting vehicle owners that children are always safer in the rear seat.

FMVSS No. 213, ''Child restraint systems.'' This standard specifies requirements for child restraint systems and requires that manufacturers provide consumers with detailed information

relating to child safety in air bag equipped vehicles. The vehicle owner's manual must include information about the operation and do's and don'ts of built-in child seats.

FMVSS No. 226, ''Ejection mitigation.'' This standard establishes vehicle requirements intended to reduce the partial and complete ejection of vehicle occupants through side windows in crashes, particularly rollover crashes. The standard applies to vehicles with a gross vehicle weight rating of 4,536 kg or less. Written information must be provided with every vehicle describing any ejection mitigation countermeasure that deploys in the event of a rollover and a discussion of the readiness indicator specifying a list of the elements of the system being monitored by the indicator, a discussion of the purpose and location of the telltale, and instructions to the consumer on the steps to take if the telltale is illuminated.

Part 575 Section 103, ''Camper loading.'' This regulation requires manufacturers of slide-in campers to affix to each camper a label that contains information relating to identification and proper loading of the camper and to provide more detailed loading information in the vehicle owner's manual. This regulation also requires manufacturers of trucks that would accommodate slide-in campers to specify the cargo weight ratings and the longitudinal limits within which the center of gravity for the cargo weight rating should be located.

Part 575 Section 105, ''Vehicle rollover.'' This regulation requires manufacturers of utility vehicles to alert the drivers of these vehicles that they have a higher possibility of rollover than other vehicle types and to advise them of steps that can be taken to reduce the possibility of rollover and/or to reduce the likelihood of injury in a rollover. A statement is provided in the regulation, which manufacturers shall include, in its entirety or equivalent form, in the vehicles owner's manual.

Affected Public: Individuals, households, business, other for-profit, not-for-profit, farms, Federal Government and State, Local or Tribal Government.

Estimated Total Annual Burden: 3,724 hours.

ADDRESSES: Send comments, within 30 days, to the Office of Information and Regulatory Affairs, Office of Management and Budget, 725–17th Street NW., Washington, DC 20503, Attention NHTSA Desk Officer.

Comments are invited on: Whether the proposed collection of information is necessary for the proper performance of the functions of the Department, including whether the information will have practical utility; the accuracy of the Department's estimate of the burden of the proposed information collection; ways to enhance the quality, utility and clarity of the information to be collected; and ways to minimize the burden of the collection of information on respondents, including the use of automated collection techniques or other forms of information technology. A Comment to OMB is most effective if OMB receives it within 30 days of publication.

Authority: 44 U.S.C. 3506(c); delegation of authority at 49 CFR 1.50.

Issued on: February 17, 2012.

Christopher J. Bonanti,

Associate Administrator for Rulemaking.

[FR Doc. 2012–4371 Filed 2–24–12; 8:45 am]

BILLING CODE 4910–59–P

FEDERAL REGISTER

Vol. 77 Monday,

No. 38 February 27, 2012

Part II

Department of Transportation

National Highway Traffic Safety Administration

49 CFR Parts 571 and 572

Child Restraint Systems; Hybrid III 10-Year-Old Child Test Dummy; Final Rules

DEPARTMENT OF TRANSPORTATION

National Highway Traffic Safety Administration

49 CFR Part 571

[Docket No. NHTSA–2011–0176]

RIN 2127–AL10 (Formerly RIN 2127–AJ44)

Child Restraint Systems

AGENCY: National Highway Traffic Safety Administration (NHTSA), U.S. Department of Transportation (DOT).

ACTION: Final rule.

SUMMARY: This final rule amends the Federal motor vehicle safety standard for child restraint systems to expand its applicability to child restraints sold for children weighing up to 36 kilograms (kg) (80 pounds (lb)). This rule also amends the standard to incorporate use of a Hybrid III 10-year-old child test dummy (HIII–10C), weighing 35 kg (78 lb), in compliance tests of child restraints newly subject to the standard. In a companion document published elsewhere in this issue of the **Federal Register**, NHTSA is adding specifications and qualification requirements for the HIII–10C to our regulation for anthropomorphic test devices. This rulemaking establishes performance and other requirements for child restraint systems heretofore not regulated by a safety standard, i.e., child restraints manufactured for children weighing 65 to 80 lb.

DATES: This final rule is effective February 27, 2014. The incorporation by reference of certain publications listed in the standard is approved by the Director of the Federal Register as of February 27, 2014. If you wish to petition for reconsideration of this rule, your petition must be received by April 12, 2012.

ADDRESSES: If you wish to petition for reconsideration of this rule, you should refer in your petition to the docket number of this document and submit your petition to: Administrator, National Highway Traffic Safety Administration, 1200 New Jersey Avenue SE., West Building, Washington, DC, 20590. For information on the Privacy Act, see Rulemaking Analyses and Notices section.

For access to the docket to read background documents or comments received, go to *http://www.regulations.gov* and follow the online instructions for accessing the docket. You may also visit DOT's Docket Management Facility, 1200 New Jersey Avenue SE., West Building Ground Floor, Room W12–140, Washington, DC 20590–0001 for on-line access to the docket.

FOR FURTHER INFORMATION CONTACT: For technical issues, you may call Ms. Cristina Echemendia (Telephone: 202–366–6345) (Fax: 202–493–2990). For legal issues, you may call Ms. Deirdre Fujita, Office of Chief Counsel (Telephone: 202–366–2992) (Fax: 202–366–3820). You may send mail to these officials at the National Highway Traffic Safety Administration, U.S. Department of Transportation, 1200 New Jersey Avenue SE., West Building, Washington, DC 20590.

SUPPLEMENTARY INFORMATION: This rulemaking originally had the RIN 2127–AJ44. This final rule has a new RIN (AL10) because a September 2011 final rule on one of the issues of the rulemaking was considered to have completed action on the previous RIN.

Petitions for reconsideration of this rule: The petition will be placed in the docket. Anyone is able to search the electronic form of all documents received into any of our dockets by the name of the individual submitting the comment (or signing the comment, if submitted on behalf of an association, business, labor union, etc.). You may review DOT's complete Privacy Act Statement in the **Federal Register** published on April 11, 2000 (Volume 65, Number 70; Pages 19477–78).

Table of Contents

I. Introduction
II. Summary of Rulemaking Proposals
a. August 31, 2005 NPRM
b. January 23, 2008 SNPRM (2008 SNPRM)
c. November 24, 2010 SNPRM (2010 SNPRM)
III. Overview of Issues Decided in This Final Rule
IV. Agency Decisions
a. Extend the Applicability of FMVSS No. 213
b. Weight Ranges
c. Performance and Other Criteria
1. HIII–10C Dummy
2. HIII–6C Dummy
d. UMTRI Positioning Procedure
e. LATCH Issues
1. The Label
2. Combined Weight
3. Account for Weight of CRS
4. Top Tether
5. Testing with the HIII–10C
6. Boosters
7. Other
f. Lead Time
g. Mass Limit
h. Miscellaneous Issues
1. Housekeeping
2. Belt Fit
3. Shoe Size
4. Preemption Language
V. Rulemaking Analyses and Notices

I. Introduction

The dynamic test requirements in FMVSS No. 213 comprehensively assess the crashworthiness of child restraint systems (CRSs) in a rigorous 48 kilometers per hour (kmph) (30 miles per hour (mph)) frontal sled test. The assessment uses available anthropomorphic test devices (ATDs) (crash test dummies) representing children of different ages. The ATDs are regularly assessed, upgraded, replaced or supplemented with new ATDs by NHTSA, as needed and as new state-of-the-art test dummies become available.

Through the history of FMVSS No. 213, the number and sizes of ATDs used to assess CRSs' compliance with the standard has greatly expanded. Child occupants of many different ages are represented by the ATDs, to provide an expansive assessment of the ability of CRSs to restrain the children for whom the CRS manufacturer has designed the restraint.

The agency began the FMVSS No. 213 sled test program in 1979 with a 6-month-old child (uninstrumented) ATD and a three-year-old child (instrumented) ATD.[1] In 1995, NHTSA expanded the test devices by replacing the 6-month-old with ATDs representing a newborn infant and a 9-month-old child, and added a 6-year-old child instrumented ATD, the latter to test booster seats.[2] In 2003, NHTSA added an instrumented 12-month-old infant ATD to the standard in place of the uninstrumented 9-month-old dummy, and replaced the 3-year-old child and 6-year-old child ATDs with their state-of-the-art Hybrid III counterparts.[3] In that 2003 rulemaking, NHTSA expanded the applicability of FMVSS No. 213 to CRSs for children who weigh up to 65 lb and added a weighted Hybrid III 6-year-old child ATD to test restraints recommended for children in the upper weight range. The agency aimed to have an array of ATDs representing children at or near the extremes of the weight ranges identified by a manufacturer as being suitable for each type of child restraint.

In early 2000, NHTSA asked the Society of Automotive Engineers (SAE) Dummy Family Task Group (DFTG) to develop a test dummy representative of a 10-year-old child. NHTSA had sought development of a test dummy between the sizes of a 6-year-old and a 12-year-old for several years.[4]

[1] 44 FR 72131, December 13, 1979.

[2] 60 FR 35126, July 6, 1995.

[3] 68 FR 37620, June 24, 2003.

[4] A 12-year-old is approximately the size of a 5th percentile adult female. There are ATDs in NHTSA's regulations representing a 5th percentile

Legislative Activity

The agency's adoption of new ATDs into FMVSS No. 213 has long been of interest to Congress. The 1995 and 2002 rulemakings, *supra,* adding the new ATDs began from agency planned upgrades to FMVSS No. 213. During the course of NHTSA's development of the test dummies, legislative goals mirroring agency initiatives to adopt the ATDs were enacted.[5] NHTSA's adoption of the ATDs in furtherance of agency goals also satisfied these legislative goals.

Legislative activity has likewise followed the development of an ATD representing a 10-year-old child. In 2002, NHTSA began evaluating the first production prototype of the 10-year-old child dummy that DFTG had developed in response to NHTSA's request.[6] On December 4, 2002, Public Law 107–318, 116 Stat. 2772 was enacted (Anton's Law), which contained provisions for NHTSA to develop and evaluate a test dummy that represents a 10-year-old child for use in testing child restraints, and to initiate a rulemaking proceeding for the adoption of the dummy within 1 year following that evaluation.

NHTSA moved promptly to fulfill Anton's Law. Activities that would satisfy many of the statute's mandates were already underway in NHTSA in 2002 and subsequently completed by NHTSA by 2005. An August 31, 2005 NPRM (RIN 2127–AJ44) published by NHTSA was the final step in fulfilling the agency's obligations under Anton's Law. With that 2005 NPRM and previous NHTSA initiatives, NHTSA fully met the mandates of the statute.[7]

Later Developments

With the 2005 NPRM, the agency had high hopes that the HIII–10C would enhance FMVSS No. 213 by ensuring that booster seats and other CRSs recommended for older children would be robustly assessed to ensure sound performance in a 48 kmph (30 mph) crash when used by children at the upper limit of their recommended weight range, typically up to 80 lb. When we published the 2005 proposal to include the dummy in FMVSS No. 213, we proposed that booster seats must conform to several new requirements based on HIII–10C measurements, including a head injury criterion (HIC). We demonstrated in our pre-proposal testing that while most CRSs conformed to the new requirements, there were some failures, including those where HIC was exceeded. However, during extensive post-NPRM booster seat testing, inconsistencies in the test protocol revealed variability in the kinematics and measurements of the HIII–10C. In particular, the agency discovered that a slight perturbation in the test protocol could create a large change in HIC. The high variability in HIC measurements was attributable to a design feature unique to the HIII–10C in which chin-to-chest contact during the impact event can be excessively hard.[8]

Subsequently, the agency devoted substantial rulemaking and research efforts to try to address test variability. NHTSA investigated the ATD's chin-to-chest contact and developed a seating procedure that was proposed in an SNPRM published in 2008. Later, after analyzing comments opposing the SNPRM, NHTSA published a second SNPRM in 2010 which proposed a different seating procedure, but acknowledged that HIC appeared unusable as an FMVSS No. 213 injury criterion when the HIII–10C was used so positioned. Throughout the rulemaking proceeding, NHTSA informed the public of its research findings, concerns and ideas about using the HIII–10C in FMVSS No. 213, and in turn learned from comments from research organizations, consumer groups, CRS, vehicle, and ATD manufacturers, and others. Considerable effort was devoted to revising the test protocol to eliminate high variability in HIC.

The endeavor has led to a new dummy positioning procedure that improves test repeatability with no substantial change to the HIII–10C. The agency expended substantial research and rulemaking resources in this rulemaking. The ATD appeared to be a worthwhile test instrument notwithstanding its problems in measuring HIC. We also wished to implement Anton's Law as fully as possible.

The agency has determined that the HIII–10C is an important ATD that will enhance our ability to assess the performance of CRSs and other occupant protection systems in protecting children.[9] In the accompanying 49 CFR part 572 final rule published today, we adopt the HIII–10C into our regulation for anthropomorphic test devices. The HIII–10C will provide an enhanced assessment of child restraint performance and is worthy of adoption into FMVSS No. 213. However, due to the variability in HIC measures resulting from hard chin-to-chest contacts, we will not assess HIC as an FMVSS No. 213 injury criterion when using this ATD.

II. Summary of Rulemaking Proposals [10]

a. August 31, 2005 NPRM

On August 31, 2005, NHTSA published an NPRM initiating rulemaking proposing to amend FMVSS No. 213, *Child Restraint Systems,* to adopt an instrumented 35 kg (78 lb) Hybrid III test dummy representing a 10-year-old child. 70 FR 51720, August 31, 2005, Docket No. NHTSA–2005–21245 (RIN 2127–AJ44). NHTSA proposed to:

1. Expand the definition of ''child restraint system'' in FMVSS No. 213 to include devices designed for use in a motor vehicle or aircraft to restrain, seat, or position children who weigh 80 lb (36 kg) or less;

2. Use the HIII–10C dummy to test belt-positioning seats and other child restraint systems recommended for children weighing more than 50 lb (22.7 kg);

3. Incorporate, with the HIII–10C, the injury criteria and other performance measures specified in FMVSS No. 213 for evaluating child restraint systems;

4. Remove a 4.4 kg mass limit for belt-positioning seats (S5.4.3.2 of FMVSS No. 213).

adult female for use in its vehicle frontal and side impact programs. (49 CFR part 572, Subparts O and V, respectively.)

[5] See, the NHTSA Authorization Act of 1991 (sections 2500–2509 of the Intermodal Surface Transportation Efficiency Act (ISTEA), and the Transportation Recall Enhancement, Accountability and Documentation (TREAD) Act, respectively.

[6] Extensive evaluation of the dummy continued through mid-2004. ''Technical Evaluation of the Hybrid III Ten Year Old Dummy (HIII–10C),'' Stammen; Vehicle Research and Test Center, National Highway Traffic Safety Administration (September 2004).

[7] The August 31, 2005 NPRM provides a detailed overview of NHTSA's responses to the child restraint provisions of Anton's Law. See 70 FR at 51721.

[8] This is described in detail in the January 23, 2008 supplemental notice of proposed rulemaking (SNPRM).

[9] The HIII–10C represents children of a size heretofore not represented by the ATDs used in NHTSA regulations. The child ATDs in 49 CFR part 572 that NHTSA uses for testing CRSs are ATDs representing a newborn infant, a 12-month-old, a 3-year-old, a 6-year-old, and a weighted 6-year-old. In 49 CFR part 572, there is also specified a 5th percentile adult female ATD, which is approximately the size of a 12-year-old.

[10] For readability purposes, this section summarizes the more noteworthy rulemaking proposals still outstanding, which are resolved by this final rule. It does not summarize more minor proposals, such as housekeeping amendments, or issues that were decided in previously-published documents, such as the continued optional use of the Hybrid II 6-year-old dummy to test CRSs, which was discussed in a final rule published under RIN 2127–AJ44 on September 9, 2011. All outstanding proposals, including those not summarized here, are discussed in this preamble.

b. January 23, 2008 SNPRM (2008 SNPRM)

The comments on the August 31, 2005 NPRM supported extending the applicability of FMVSS No. 213 to child restraints recommended for children up to 80 lb (36 kg), and supported having a 10-year-old dummy to test higher weight-rated child restraints. However, several commenters raised concerns about the biofidelity of the HIII–10C dummy, particularly with regard to the interaction of the dummy's chin with the upper sternal bib region covering the upper portion of a metal ''spine box.'' Commenters said that the dummy exhibited ''chin-to-chest'' contacts resulting in high HIC scores and high HIC variability when tested multiple times under the same conditions.

In response to these comments, the agency conducted a series of tests with the HIII–10C dummy to investigate the factors that influenced chin-to-chest contact and the resulting high HIC scores and HIC variability. Results revealed that dummy posture was the primary factor contributing to HIC variation observed in testing of belt-positioning seats.[11] A more upright dummy posture minimized the hard chin-to-chest contact, which resulted in more repeatable and generally lower HIC values. Accordingly, the agency developed a new dummy positioning procedure which established dummy posture (14 degree torso angle [12]) and a belt positioned at specific landmarks of the dummy's body, and prepared an SNPRM to propose the procedure for use in FMVSS No. 213.

On January 23, 2008, the agency published the 2008 SNPRM.[13] The document supplemented the 2005 NPRM by:

1. Proposing dummy positioning procedures that establish dummy posture (14 degree torso angle) and seat belt positions based on specific landmarks of the dummy's body. NHTSA proposed that the dummy positioning procedures would be used when using the HIII–10C and the Hybrid III 6-year-old child dummy (HIII–6C) to test belt-positioning seats.

2. Changing an earlier proposal concerning which CRSs would be tested with the HIII–10C test dummy. The 2008 SNPRM proposed that child restraints recommended for children weighing 22.7 to 29.5 kg (50 to 65 lb) be tested with the HIII–6C dummy for performance, and with the weighted HIII–6C dummy for structural integrity. The HIII–10C dummy would be used to test CRSs recommended for children weighing more than 29.5 kg (65 lb).

c. November 24, 2010 SNPRM (2010 SNPRM)

The comments received on the January 23, 2008 SNPRM strongly opposed the 14 degree torso angle positioning procedure. Several commenters supported the dummy positioning procedure developed by the University of Michigan Transportation Research Institute (UMTRI) and urged NHTSA to adopt those procedures. However, some commenters noted that the UMTRI procedure results in unrealistically high HIC values measured by the dummy due to the more slouched positioning of the dummy. UMTRI suggested that NHTSA not use HIC in the testing of belt-positioning seats with the HIII–10C until the biofidelity of the test dummy is improved.

Based on an analysis of the comments to the 2008 SNPRM and other information, including the results of additional testing by NHTSA of belt-positioning seats using the UMTRI positioning procedure, NHTSA issued the 2010 SNPRM on November 24, 2010. The document supplemented the proposals of the earlier NPRMs by proposing to:

1. Adopt a procedure for positioning the HIII–10C dummy in belt-positioning seats based on the procedure developed by UMTRI, instead of the 14 degree torso upright procedure. The UMTRI procedure includes specifications for positioning the belt-positioning seat on the standard seat assembly. The 2010 SNPRM also proposed using the UMTRI procedure when testing with the HIII–6C in belt-positioning seats in FMVSS No. 213 tests.

2. Withdraw the proposal for the HIC criterion for the HIII–10C dummy, until problems with the dummy that resulted in uncharacteristically high HIC values and HIC variability in FMVSS No. 213 testing have been resolved.

3. Specify that a child restraint system recommended for children weighing over 29.5 kg (65 lb) will not be subject to testing with the HIII–10C when attached to the standard seat assembly using the Lower Anchors and Tethers for Children (LATCH) [14] system. These CRSs would be tested with the HIII–10C while attached to the standard seat assembly with the seat belt system. To reduce the likelihood that a consumer may mistakenly use this type of CRS with LATCH, the 2010 SNPRM proposed to require harness-equipped CRSs recommended for children of a weight range that includes children weighing over 29.5 kg (65 lb), to be labeled with an instruction to the consumer not to use the vehicle LATCH system with a child weighing more than 29.5 kg (65 lb).

Comments Received on November 24, 2010 SNPRM

The agency received 14 comments on the 2010 SNPRM, from child restraint manufacturers, motor vehicle manufacturers, child passenger advocacy groups, and research organizations. Generally, all commenters expressly or implicitly supported using the UMTRI positioning procedure to test the HIII–10C and HIII–6C dummies in belt-positioning seats, agreeing that the procedure would position the ATDs in a more realistic seating posture than the 14 degree torso angle positioning procedure. JPMA asked that NHTSA not use a pelvis positioning pad referenced in the proposed UMTRI procedure, believing that the pad increases the likelihood of hard chin-to-chest contact that may result in high HIC values and HIC variability, and asked several technical questions relating to how the UMTRI procedure is conducted. Commenters expressed support for not adopting HIC, although several made clear their view that NHTSA should begin measuring HIC as soon as possible.

In commenting on the proposal that the HIII–10C dummy would be used to test CRSs recommended for children weighing more than 29.5 kg (65 lb), Britax suggested that the cut-off should be 70 lb, so that its CRS that is currently recommended for use with children weighing more than 65 lb would not be tested with the HIII–10C dummy.

A number of commenters had views on the proposed label for harness-equipped CRSs sold for heavier children. All agreed that consumers are in need of information as to how heavy a child could be without potentially overloading the LATCH anchors. Most commenters on this issue supported a label, but several (including JPMA and associations of vehicle manufacturers) believed that, to avoid overloading the

[11] Detailed explanation provided in the January 23, 2008 SNPRM (73 FR at 3904–3905).

[12] In the January 23, 2008 SNPRM, *infra,* torso angle was defined as the angle between the line joining the center of gravity of the dummy's head to its H-point and a vertical plane (73 FR 3901, 3907).

[13] SNPRM for FMVSS No. 213, 73 FR 3901, Docket No. NHTSA–2007–0048; reopening of comment period, 73 FR 15963, March 26, 2008.

[14] LATCH refers to *L*ower *A*nchors and *T*ethers for *Ch*ildren, a term that was developed by industry to refer to the child restraint anchorage system required to be installed in vehicles (FMVSS No. 225). FMVSS No. 213 requires harness-equipped conventional child safety seats to be able to be installed in a vehicle by both a vehicle's LATCH system, and the vehicle's seat belt.

LATCH anchors, the maximum child occupant weight for LATCH use specified on the label should be based on the combined weight of the CRS and the child occupant, rather than the child weight alone. On the other hand, Sunshine Kids, a CRS manufacturer, suggested that the standard should provide CRS manufacturers the ability to determine the maximum weight of the child the CRS can hold, if the CRS manufacturer could provide crash test results showing that the CRS with an ATD with a maximum recommended weight will remain structurally intact and will not exceed a 12,000 Newton (N) load on the anchors in a 35 mile per hour (mph) frontal barrier crash test with a 47 g deceleration pulse.

Some commenters (including consumer advocates) supported a weight limit only on using the lower LATCH anchors, and not the top tether anchor. Several commenters (including CRS and vehicle manufacturers) suggested that the label ought to allow CRS manufacturers to state that the LATCH anchors could be used to secure a belt-positioning booster to the vehicle seat, to avoid having the booster become a flying projectile in a crash.

Differences With the 2010 SNPRM

After reviewing the comments to the 2010 SNPRM, we have decided to adopt the following modifications of its proposal:

Regarding the UMTRI procedure, we changed the proposal regarding use of the pelvis positioning pad, to only prepare the HIII–10C dummy with the pad, and not the HIII–6C dummy. The lap shield used with the HIII–6C dummy and the HIII–10C are the same but the dimensions of the drawing of the lap shield proposed in the 2010 SNPRM are reduced to better fit the child dummies. We added steps to the procedure preparing the HIII–10C dummy to set the dummy's neck and lumbar angle. This setup was proposed in the 2008 SNPRM.

We did not adopt the proposed instructions on how to apply the seat belt on the dummy during the positioning procedure due to an oversight with the proposal. The proposed instructions were specific to continuous belts. FMVSS No. 213 does not specify a continuous belt so the provisions were not relevant to the FMVSS No. 213 belt system.

Other changes are to the proposed requirements for labeling and written instructions, with regard to how heavy a child can be before LATCH should no longer be used to attach a harness-equipped CRS to the vehicle seat.

These and other changes are discussed in this preamble.

III. Overview of Issues Decided in This Final Rule

Based on our analysis of all available information, including comments to the 2005 NPRM, 2008 SNPRM, and 2010 SNPRM, this final rule amends FMVSS No. 213 in the following manner.

(a) We extend the applicability of FMVSS No. 213 to child restraint systems recommended for use by children weighing 80 lb or less, from the current criterion of 65 lb or less.

(b) We adopt the following injury criteria for the HIII–10C dummy in the sled test: chest acceleration = 60 g's; head excursion = 813 mm for untethered condition and 720 mm for tethered condition; and knee excursion = 915 mm.

(c) This final rule adopts a procedure for positioning the HIII–6C and HIII–10C dummies in belt-positioning seats based on the procedure developed by UMTRI but without the use of the pelvis positioning pad for the HIII–6C dummy.

(d) We specify our use of the HIII–10C dummy in FMVSS No. 213 compliance tests of CRSs recommended for children weighing more than 65 lb. We test CRSs rated for children weighing 50 to 65 lb with the HIII–6C instrumented dummy for performance, and with the weighted HIII–6C uninstrumented dummy for structural integrity.

(e) This final rule requires a label to be placed on a CRS equipped with internal harnesses for which the *combined* weight of the CRS and the maximum recommended child weight for use with the internal harnesses exceeds 65 lb. The label informs the consumer that the lower anchors may be used to attach the CRS to the vehicle seat up to a combined child and CRS weight of 65 lb when the child is restrained by the internal harnesses. The purpose of the label is to reduce consumer confusion about using lower LATCH anchorages, and to ensure that forces generated by the child and CRS in most crash conditions do not exceed the lower anchors' design limits. This final rule also specifies that in a compliance test, NHTSA will not attach harness-equipped CRSs to the standard seat assembly using the lower anchorages of the LATCH system, when the test involves an ATD whose weight is greater than the manufacturer-recommended maximum child weight for lower LATCH anchor use.

(f) *Other issues.* This final rule also amends FMVSS No. 213 to: delete the mass limit of 4.4 kg for belt-positioning boosters (S5.4.3.2); make housekeeping amendments (e.g., remove reference to a 9-month-old child ATD since it is no longer used in compliance tests); address views expressed on possible future belt fit requirements, and provide a lead time of two years.

Table 1 provides a summary of the proposals underlying this final rule, the provisions they contained and how they progressed.

BILLING CODE 4910–59–P

Table 1. Progression of Proposed Changes

2005 NPRM	2008 SNPRM	2010 SNPRM	This Final Rule
Extend FMVSS No. 213 to CRSs recommended for children 80 lb or less. Adopt HIII-10C for testing CRSs with a weight rating of 50-80 lb	Use HIII-10C to test CRSs with a weight rating of 65-80 lb. CRSs with a weight rating of 50-65 lb will continue to be tested with HIII-6C and Weighted HIII-6C dummies.		
Injury Criteria: HIC=1000, chest 60 g's, head excursion=813mm (un-tethered), head excursion = 720mm (tethered), knee excursion = 915mm		Not use HIC for HIII-10C dummy. All other criteria apply.	
	14 degree positioning procedure	UMTRI procedure (belt-positioning seats) with pelvis pad	UMTRI procedure (belt-positioning seats), with pelvis pad for HIII-10C and without pelvis pad for HIII-6C; belt provisions
Buckle Release=437 N			
Delete mass limit of S5.4.3.2 for belt-positioning seats			
	Head support surface S5.2.1.2 not applicable for HIII-10C testing		
		All harnessed CRSs with a 65+ lb weight rating tested with the HIII-10C dummy will not be tested using LATCH	If the combined weight of the CRS plus child is greater than 65 lb, the CRS will not be tested using lower LATCH attachments with an ATD that results in the combined weight exceeding 65 lb
		Include label on all CRSs indicating not to use LATCH attachments with children weighing over 65 lb.	Include label on harnessed CRSs indicating the maximum allowable child weight for lower LATCH use. The lower anchors may be used up to a combined weight of child and CRS of 65 lb.

BILLING CODE 4910–59–C

IV. Agency Decisions

a. Extend the Applicability of FMVSS No. 213

There has been considerable interest over the years in expanding the applicability of FMVSS No. 213 to increase the likelihood that CRSs that are recommended for older children will perform adequately in a crash. This interest goes hand-in-hand with efforts to increase CRS use among older children who cannot adequately fit a vehicle's lap and shoulder belt system. The goal of expanding the applicability of FMVSS No. 213 is to ensure that CRSs that are recommended for children over the current 65 lb weight limit of the standard meet the dynamic test requirements of the standard.

In the TREAD Act final rule (*supra*), the applicability of FMVSS No. 213 was expanded to child restraint systems for

children who weigh up to 65 lb. The agency also specified the use of the weighted 6-year-old (62-lb) test dummy to test restraints recommended for children weighing 50 to 65 lb. In the TREAD Act final rule, the agency considered the merits of extending the standard to restraints recommended for use by children weighing up to 80 lb, but decided against that expansion because there was not then any test dummy that could adequately assess the dynamic performance of a child restraint in restraining an 80 lb child. NHTSA believed that expanding the standard to restraints for children weighing up to 80 lb would not be meaningful in the absence of a dummy of suitable size and weight that could assess the conformance of the restraints with the performance requirements of the standard.

The HIII–10C is now available for incorporation into FMVSS No. 213. The agency has evaluated the test dummy, and is satisfied that the dummy's performance merits its use in FMVSS No. 213 compliance tests, subject to the condition that HIC will not be a performance criterion in FMVSS No. 213 when this ATD is used. In a separate final rule published today, we are amending 49 CFR part 572, ''Anthropomorphic test devices,'' to adopt the HIII–10C into subpart T.

This final rule enhances child passenger safety by way of the requirements discussed below. It should be noted, however, that data indicate that booster seats are generally very effective items of equipment. Analyses of NHTSA's crash databases [15] and insurance claims databases [16] indicate that use of belt-positioning seats by 4- to 8-year-old children reduces the risk of moderate [17] and greater severity injuries by 45 percent compared to when only seat belts are used.

Further, we do not expect this rule to increase costs noticeably because all CRSs that we tested with the HIII–10C dummy met the FMVSS No. 213 performance requirements adopted today. (Labeling of the CRSs will be revised pursuant to this rule, involving minimal costs.) Yet, by requiring that all future CRSs recommended for children weighing more than 65 lb will be tested with the 10-year-old child dummy, this rule will ensure that the satisfactory performance of current CRSs for older children will be maintained.

Comments; Agency Decision

All commenters to the NPRMs supported extending the applicability of FMVSS No. 213 to child restraints recommended for children up to 80 lb, and supported having a 10-year-old dummy to test higher-weight rated child restraints. With regard to the Hybrid III 10-year-old dummy, the concerns about the HIII–10C dummy's measurement of HIC are addressed by the next section below in this preamble.

In response to the 2005 NPRM, Public Citizen (PC) requested that NHTSA reevaluate its weight limits for booster seats to make sure all children are adequately protected in motor vehicles because the average 10-year-old today weighs more than 80 pounds and the weight of children is steadily increasing. PC also suggested that the 10-year-old dummy should be up-weighted to more closely match the mean weight of children today. It stated that the agency's proposed increase for recommended restraints does not accurately reflect the increased weight of children who will need to use the booster seats.

We disagree with PC that the HIII–10C is unrepresentative and should be up-weighted. The HIII–10C dummy, with a weight of 77.6 lb (35 kg), a seated height of 29 inches (in) (74 cm), and a standing height of 51 in (130 cm), is ideally suited to test the upper load and height limits of safety restraints for nearly all 9-year-old and more than half of 10-year-old children. The agency notes that weight and seated height are the most relevant parameters for child occupant injury assessment purposes. Weight relates to the structural integrity of the CRS and belt restraints. Seated height establishes the location and fit of the seat belts on the shoulder and on the torso as well as head trajectory and its forward displacement during the sled test. Being slightly above the average, the mass of the HIII–10C dummy is sufficiently suitable for testing the structural integrity of CRSs and assures their durability for use by children in the 6- to 10-year-old age range.

We conclude that the weight and seated height of the HIII–10C are well-chosen for testing CRSs rated up to 80 lb. The ATD's anthropometry fits and is centered on the mid distribution range of physical dimensions of an average 10-year-old identified in the Centers for Disease Control and Prevention (CDC) 2000 growth charts. Its weight and seated height are well suited to address the structural integrity and the belt fit of booster seats, respectively, being offered in the market place for those size children.[18] The HIII–10C successfully fills the gap between a 6-year-old and a 12-year-old child, and warrants incorporation into FMVSS No. 213. Further discussion can be found in the 49 CFR part 572 final rule published concurrently with this document.

The incorporation of the HIII–10C dummy will now allow testing of CRSs and belt-positioning seats for children weighing more than 65 lb and up to 80 lb, which is a growing segment of the CRS market that currently is not undergoing compliance testing for performance at the maximum recommended weight limit. Incorporating the ATD fulfills NHTSA's plan to have an ATD representing children between the size of a 6-year-old and a 12-year-old, and is as Anton's Law envisioned. Adopting the HIII–10C makes the regulation of CRSs for children up to 80 lb meaningful, as the performance of the CRSs to protect larger children will now be dynamically tested in a rigorous sled test with an ATD better representative of children for whom the CRS is recommended than current ATDs in FMVSS No. 213.

b. Weight Ranges

Originally, the 2005 NPRM proposed the HIII–10C be used to test CRSs for children over 50 lb. In its comment to that NPRM, Britax suggested that, due to the size of the HIII–10C, the HIII–10C dummy should be used for CRSs recommended for children weighing more than 65 lb instead of 50 lb. NHTSA agreed, and in the 2008 SNPRM proposed the use of the HIII–10C to test CRSs recommended for use by children weighing more than 65 lb and the use of the HIII–6C dummy and the weighted HIII–6C dummy to assess the compliance of CRSs recommended for children in the 50 to 65 lb weight range.

Comments

In its comment on the 2010 SNPRM, Britax requested that the 65 lb cut-off be increased to 70 lb, so that only CRSs recommended for children weighing 70 lb or more would be tested with the HIII–10C. Britax stated that it produces convertible [19] CRSs recommended for children weighing 5 to 70 lb. The commenter stated that the HIII–10C weighs 8 lb more than the recommended weight range of the CRS and does not fit properly in the restraint. Britax stated that the proposed

[15] Booster Seat Effectiveness Estimates Based on CDS and State Data, NHTSA, DOT HS811338, July 2010.

[16] Arbogast, K. B., Jermakian, J. S., Kellan, M.J., Durbin, D. R., Effectiveness of Belt-Positioning Booster Seats: An Updated Assessment, Pediatrics, Vol. 124, pp. 1281–1286, 2009.

[17] Moderate injuries are of severity level 2 in the Abbreviated Injury Scale (AIS).

[18] As used in FMVSS No. 213, the HIII–10C will also measure head and knee excursions and chest accelerations, providing a meaningful assessment of injury risk.

[19] Britax Marathon, Boulevard and Advocate convertible seats.

requirement would result in the removal of such convertible CRSs from the market. Increasing the standard's weight cut-off to 70 lb, as Britax suggested, would result in this CRS not being tested with the HIII–10C dummy.

Agency Response

We are declining Britax's request. We believe that CRSs recommended for children weighing 65 lb or more should be tested with the HIII–10C. If the standard's criterion were 70 lb, child restraints rated for children up to 70 lb would only be tested at the upper weight range with an instrumented test dummy weighing just 51 lb (the HIII 6-year-old). This would create a large gap in testing the CRS to its performance using an ATD. The agency seeks to limit large gaps in FMVSS No. 213 testing to the extent possible.

In the past, problems arose when the gap was too large. When FMVSS No. 213 first adopted dynamic test requirements, two child test dummies were used in the test. (44 FR 72131; December 13, 1979.) One represented a 6-month-old child, the other a 3-year-old child. Due to the unavailability of other ATDs, the standard was written such that CRSs recommended for children weighing 0 to 20 lb were tested with the 6-month-old ATD, and CRSs recommended for children 20 to 50 lb were tested with the 3-year-old ATD (weighing 33 lb).

Alarmingly, CRSs (shield-type boosters) recommended for children weighing 20 to 70 lb were subsequently produced under that scenario. Manufacturers were recommending the CRSs for a wide range of children (20 to 70 lb), but were only required by FMVSS No. 213 to test them with just a 3-year-old (33 lb) dummy. Concerned about the ability of CRSs to restrain children in such a large weight/size range, NHTSA conducted tests on shield-type booster seats using newly-developed ATDs representing a 9-month-old (20 lb) child and a 6-year-old child (48 lb).

The test results confirmed that the assessment of performance under then-FMVSS No. 213 needed to be expanded. In some tests, the CRS ejected the 9-month-old (20 lb) dummy, or structurally failed or yielded excessive head excursions in tests with the 6-year-old (48 lb) dummy. These CRSs—all recommended for children 20 to 70 lb—were certified as meeting FMVSS No. 213. The problem was that the standard only required testing of the restraint with the 3-year-old (33 lb) test dummy. The standard was not assessing the CRSs at the extremes of the recommended weight ranges.[20]

As FMVSS No. 213 evolved and more ATDs became available for testing, we adopted more ATDs. To the extent possible, we try to ensure that there are no large gaps in FMVSS No. 213 testing of CRSs, particularly at the extremes of recommended weight ranges.

In the 1995 ISTEA rulemaking adding ATDs to FMVSS No. 213, NHTSA decided that CRSs for children weighing more than 40 lb would be tested with a 6-year-old (48 lb) dummy. *Id.* In a petition for reconsideration of the final rule, a CRS manufacturer asked that the weight cut-off be 43 lb instead of 40 lb, so that its CRSs rated for children up to 43 lb would continue to be tested just with the 3-year-old (33 lb) dummy, rather than with the 6-year-old (48 lb) dummy. In a June 18, 1996, final rule responding to the petition, NHTSA disagreed and kept the cut-off at 40 lb, believing that use of the 6-year-old dummy, weighing 48 pounds, would result in a more rigorous and better assessment of the CRS in protecting children for whom the CRS was recommended than a test with a 3-year-old dummy that weighs only 33 lb. (61 FR 30824.) That is, if a CRS were recommended for children up to 43 lb, it should be tested with the 6-year-old (48 lb) dummy as that ATD better represents the children for whom the CRS is recommended at the upper recommended weight range, than the 3-year-old dummy. Later, the CRS manufacturer adjusted its CRS's weight cut-off from 43 lb to 40 lb.

We recognize that competing interests have to be balanced in deciding this topic. On the one hand is the interest in having children restrained as long as possible in a restraint mode (e.g., rear-facing, harness-restraint, or belt-positioning seat) rather than being prematurely graduated to the CRS for children in the next older age group. On the other hand, there is a need to assure that CRSs are reasonably sled tested and are structurally sound to ensure that they protect the children for whom the restraint is recommended, as advertised.

Our increasing the cut-off over which the HIII–10C would be used, from 50 lb as originally proposed to 65 lb in this final rule, achieves a balance. It will accommodate the majority of CRS manufacturers.[21] It is possible that manufacturers that lower the CRS recommended weight cut-off to 65 lb from some higher weight could redirect a small segment of children to move to a belt-positioning sooner. However, CRSs recommended for children weighing up to 65 lb would accommodate all 6-year-old children and up to 93 percent of 7-year-old children. This covers the large majority of children whom the agency recommends be restrained in child restraints with harnesses until they exceed the recommended height and weight limit.[22] If the weight cut-off were 70 lb, the nearly 20-lb gap between the weight of the instrumented ATD (50 lb, 6-year-old child test dummy) used to test the Britax CRS and the upper limit of the Britax CRS (70 lb) would be too large for NHTSA to conclude that the performance of the CRS in protecting a child weighing just under 70 lb was adequately assessed.

In the 1996 rulemaking (61 FR 30824), we recognized that there was a risk that, as a result of the decision to keep the weight cut-off at 40 lb, CRS manufacturers might revise the recommended upper weight limit for their convertible CRSs from 43 lb to 40 lb. The negative implication of this was that parents may transition their children out of toddler restraints to booster seats or a vehicle belt system sooner than when the child is more physically developed. Yet, the agency was also hopeful that, in time, manufacturers could develop designs that would enable a harness-equipped CRS to meet the performance requirements in FMVSS No. 213 when tested with the 6-year-old child dummy, thereby allowing the manufacturers to recommend their CRSs for children weighing more than 40 lb (resulting in children being kept in the harnessed-equipped CRS until they are older).

Following the rulemaking, we have found first the former, then the latter, was realized. CRS labels were initially revised such that convertible (harness-equipped) restraints were recommended for children only up to 40 lb. Later, newer designs emerged of convertible restraints with upper weight limits up to 50 lb or 65 lb. The newer CRSs have been designed to meet FMVSS No. 213 when tested with the 6-year-old ATD.

We do not believe that this decision will have negative safety consequences of any note. Manufacturers of CRSs such as the one Britax described could revise the weight cut-off downward to 65 lb so

[20] ISTEA final rule, 60 FR 35126, July 6, 1995.

[21] The agency does not have the resources to add an intermediate dummy (e.g., a 70 lb ATD) to further accommodate Britax on this issue, to permit them to recommend their CRS for children weighting up to 70 lb without being subject to testing with the HIII–10 C (78 lb) dummy.

[22] *http://www.nhtsa.gov/ChildSafety/step3* The Web site (last accessed Sep. 6, 2011) states, ''Keep your 4 to 7 year old children in their FORWARD-FACING car seat with a harness until they the top height or weight limit allowed by your car seat's manufacturer.''

as to avoid being tested with the HIII–10C, rather than completely removing the CRS from the market. If a harnessed CRS is needed for children weighing above 65 lb, experience has shown that CRS manufacturers could fill that need. We are optimistic that manufacturers that see a need will be able to redesign their harness-equipped CRSs such that the CRS would be able to meet FMVSS No. 213 when tested with the HIII–10C dummy.

This decision to make the cut-off 65 lb will benefit safety by better ensuring that CRS recommended for use with children weighing more than 65 lb will be dynamically assessed with an ATD that represents the older children for whom the CRS is recommended. Accordingly, the proposed weight categories are adopted.

The final rule's weight categories are illustrated in Table 2.

TABLE 2—FINAL RULE WEIGHT CATEGORIES

CRS Recommended for use by children of these sizes—	Are compliance tested by NHTSA with these ATDs (Subparts refer to 49 CFR part 572)
Weight not greater than 5 kg (0 to 11 lb), or height not greater than 650 mm.	Newborn (subpart K).
Weight greater than 5 but not greater than 10 kg (11 to 22 lb) or height greater than 650 mm but not greater than 850 mm.	Newborn (subpart K), CRABI (subpart R).
Weight greater than 10 kg but not greater than 18 kg (22 to 40 lb), or height greater than 850 mm but not greater than 1100 mm.	CRABI (subpart R), HIII 3-year-old (subpart P).
Weight greater than 18 kg (40 lb) but not greater than 22.7 kg (50 lb), or height greater than 1100 mm but not greater than 1250 mm.	HIII 6-year-old (subpart N) or HII 6-year-old (subpart I) (manufacturer's option).
Weight greater than 22.7 kg (50 lb) but not greater than 30 kg (65 lb), or greater than 1100 mm but not greater than 1250 mm.	HIII 6-year-old (subpart N) or HII 6-year-old (subpart I) (manufacturer's option), and weighted HIII 6-year-old (subpart S).
Weight greater than 30 kg (65 lb), or height greater than 1250 mm	HIII 10-year-old (subpart T).*

* No HIC measured with HIII–10C.

c. Performance and Other Criteria

1. HIII–10C Dummy

The 2005 NPRM proposed performance criteria for the HIII–10-year-old dummy similar to the current FMVSS No. 213 criteria, because the agency was not aware of any injuries unique to children in booster seats [23] that would necessitate separate and differing injury criteria limits. The specific injury criteria measurement maximums for the HIII–10-year old dummy were: HIC_{36} = 1000; chest acceleration = 60 g's (3 millisecond clip); head excursion = 813 millimeters (mm) for untethered condition, 720 mm for tethered condition (if applicable); and knee excursion = 915 mm. We also proposed applying other FMVSS No. 213 requirements to CRSs rated for children who weigh up to 80 lb, including structural integrity, force distribution, installation, child restraint webbing and belt assembly requirements, and flammability requirements. (The agency also proposed to eliminate S5.4.3.2's limit on the mass of belt-positioning boosters. This provision will be discussed later in this preamble.)

The 2008 and 2010 SNPRMs added to or superseded some of the 2005 NPRM proposals on performance criteria. In response to comments to the 2005 NPRM pointing out high HIC values and HIC variability related to hard chin-to-chest contact in FMVSS No. 213 testing with the HIII–10C dummy, the 2010 SNPRM proposed not to adopt the HIC criterion for tests conducted with the HIII–10C dummy in all CRSs. Correcting an oversight, the 2008 NPRM proposed to amend S5.2.1.2 of FMVSS No. 213 to specify that the HIII–10C would not be used to determine the applicability of the head support surface requirements of S5.2.1.1. Also in response to comments, the 2010 SNPRM proposed to exclude CRSs tested with the HIII–10C from a requirement that the CRS must meet the requirements of FMVSS No. 213 when installed by means of the lower anchorags of a LATCH system.

Comments

In general, the commenters supported the proposal not to adopt HIC when using the HIII–10C. UMTRI, Consumers Union (CU), Evenflo and JPMA concurred with not using HIC until the uncharacteristically hard chin-to-chest contact in the dummy has been corrected. JPMA agreed with applying existing FMVSS No. 213 injury criteria and dynamic performance measures for the HIII–10C dummy except for the HIC.

Advocates for Highway Safety (Advocates), the American Academy of Pediatrics (AAP) and SafeRideNews also concurred with not using HIC but requested that NHTSA expedite improving the dummy's biofidelity to incorporate HIC into the injury requirements. Advocates and SafeRideNews also requested that NHTSA include a HIC incorporation date in the final rule. Advocates believed that, without the implementation of HIC, quantification of the risk of head injury to children in belt-positioning seats will be limited to head excursion which, the commenter believed, provides only a ''rudimentary surrogate'' measure of contact and non-contact head injuries.

In supporting the proposal, UMTRI believed that NHTSA's injury data analysis cited in the SNPRM did not identify a significant injury problem that could be addressed by the inclusion of HIC in an FMVSS No. 213 booster seat test, regardless of the biofidelity of the dummy. It suggested that efforts to reduce the number of head injuries in the field should focus on reducing head excursion rather than reducing the linear head acceleration used to calculate HIC.

CU stated its belief that NHTSA's not adopting HIC at this point is warranted when testing with the HIII–10C. CU stated that it too concluded that the HIC values obtained from its sled tests (which are similar to FMVSS No. 213) could not be used, due in part to the potential variability of the data. CU believed that not adopting HIC is ''far preferable to suspending the use of the higher weight dummies altogether, as those dummies serve a key purpose in evaluating other potential injury criteria and structural integrity of seats recommended for higher weight children.''

Agency Response

HIC

For the reasons explained in the 2010 SNPRM, this final rule does not adopt the use of HIC as an injury measure for the HIII–10C dummy in FMVSS No. 213 tests at this time. CRSs tested with the

[23] NHTSA focused on booster seats in the NPRM because in 2005 CRSs for children weighing 65 to 80 lb were primarily booster seats.

current HIII–10C ATD can produce HIC values in the ATD indicating an unacceptable risk of head injury, even though head injuries due to chin-to-chest contact are not occurring in the real world.

NHTSA analyzed the National Automotive Sampling System (NASS) Crashworthiness Data System (CDS) data files for the years 1999 to 2008 to better understand real world injuries among children in different restraint conditions. The risk and source of injury to different body regions was also determined. The sampled data consisted of children, 5–12 years of age, in rear seats of light passenger vehicles that were involved in non-rollover frontal towaway crashes. Weighting factors in NASS/CDS were applied to the sample data to represent national estimates of towaway crashes. The weighted data consisted of 910,308 (1940 unweighted sample) children of which 49 percent were 5–7 year olds and 51 percent were 8–12 year olds. Among the 5–7 year olds, 69 percent were using vehicle seat belts, 22 percent were in harness CRS or belt-positioning seat, and 9 percent were unrestrained. Among the 8–12 year olds, 90 percent were using the vehicle belts, 1 percent was in harness CRS or belt-positioning seat, and 9 percent were unrestrained.

The risk of AIS 2+ injury[24] for children 5–7 years old was 5.2 percent for unbelted children, 1.2 percent for belted children and 0.9 percent for children in CRSs. The AIS2+ injury risk for children 8–12 years old was 8.1 percent for unbelted children and 1.3 percent for belted children. There were no cases of children 8–12 years old in CRSs. Both age groups showed a decrease of injury risk when using restraints (belt or CRS).

The most common AIS 2+ injuries among children restrained (vehicle seat belt or CRS) in rear seats were to the head and face (48 percent), followed by upper extremities (19 percent), torso (17 percent) and lower extremities (16 percent). The most-common known contacts for AIS2+ head injuries to 5–12 year old children restrained by vehicle seat belts or CRS (including belt-positioning seat) was the seat back (50 percent). There was only one case in this sample of restrained children where an AIS 2+ head injury occurred due to self-contact. Further examination of this particular case indicated that it involved a 7 year-old child restrained with a vehicle seat belt. The child's head contacted his/her knee resulting in an AIS 2-severity concussion.

The results of this real-world data analysis indicate that the injury risk is substantially reduced when the child is restrained by vehicle seat belts or in child restraints. The results show that most head injuries in restrained children are caused by contact with the seat back. Only one head injury case was associated with self contact (head contact with knee) but no cases were reported where there was chin-to-chest contact that resulted in a head injury.

These data indicate that the high HIC values measured by the HIII–10C dummy in laboratory sled tests due to chin-to-chest contact are not replicating a real world injury mechanism. Children are not being injured by chin-to-chest contact.

Another reason we have decided not to use HIC as a criterion when using the HIII–10C dummy to test belt-positioning seats is UMTRI's information demonstrating that HIC can be reduced by poor shoulder belt placement.[25] UMTRI found in sled tests that when the shoulder belt slips off the HIII–10C dummy shoulder, the chin-to-chest contact did not occur because the dummy rolls out of the shoulder belt and moves forward. As a result, the HIC value was low but head excursion increased as the dummy's upper torso was not restrained by the shoulder belt. Although head excursion increased in situations where the shoulder belt slipped off the dummy, the values were still substantially within compliance limits, therefore giving a ''passing'' value to the belt-positioning seat. These data demonstrated that using HIC as an injury measure may encourage poor belt routing designs that place the shoulder belt more outboard, which could allow the dummy to roll out of the belt in a sled test.

NHTSA will focus efforts to adopt a head injury criterion as soon as possible. However, we will not set a date by which the HIC requirement will be adopted, as Advocates suggested. As noted in the 2010 SNPRM and earlier in this document, the agency has research projects underway to improve the capability of child dummies to assess CRS performance.[26] After the agency evaluates these improvements in the HIII–10C dummy, they will be considered for incorporation into FMVSS No. 213 and part 572. At the time that the current dummy biofidelity concerns are addressed, the agency will consider adopting HIC in the agency's compliance tests. A termination date in the standard would cause confusion, as HIC would not be adopted into the standard without a rulemaking proceeding providing notice of and an opportunity to comment on the adoption of the improved ATD and HIC.

The agency is not adopting the Alliance's recommendation to limit the HIC calculation to periods prior to chin-to-chest contact. We do not agree that the timing of chin-to-chest contact can be determined by the calculation of external forces applied to the head. We examined such an approach in detail in our research tests and found it difficult to determine the time of chin-to-chest contact in a definitive manner.

SafeRideNews inquired why HIC would not be adopted in tests of the HIII–10C in harnessed CRSs, when the problematic dummy readings occurred with the dummy in belt-positioning boosters. In response, the agency did not conduct an evaluation of the HIII–10C dummy in harness-equipped CRSs due to unavailability of harness-equipped CRSs rated for children weighing more than 65 pounds at the time of testing. However, the agency believes that there is a likelihood of uncharacteristically hard chin-to-chest contact using the HIII–10C in CRSs with harnesses. In tests with the HIII–10C dummy restrained in a CRS with a harness, the dummy's chest is restrained by the harness, letting the head move and rotate forward in a similar manner as when it is tested restrained in a belt-positioning seat. Accordingly, we are not adopting HIC for tests of the HIII–10C in all CRSs.

With this decision, other problems the commenters raised concerning the HIC measurement in FMVSS No. 213 are moot.

Excursion

For the reasons provided in the notices of proposed rulemaking, we have adopted the proposal to measure head and knee excursions. Measuring the ATD's head excursion is an appropriate metric for evaluating belt-positioning seat performance. We believe that the HIII–10C exhibits good

[24] AIS 2+ injuries are those of moderate or greater severity according to the Abbreviated Injury Scale (AIS); AIS 2+ include injury severity levels: 2—moderate, 3—serious, 4—severe, 5—critical, 6—unsurvivable.

[25] Klinich, K.D., Reed, M.P., Ritchie, N.L., Manary, M.A., Schneider, L.W., Rupp, J.D., ''Assessing Child Belt Fit, Volume II: Effect of Restraint Configuration, Booster Seat Designs, Seating Procedure, and Belt Fit on the Dynamic Response of the Hybrid III 10 YO ATD in Sled Tests,'' September 2008, UMTRI–2008–49–2.

[26] The near-term Phase I upgrades to the HIII–6C and the HIII–10C dummies that are expected to be completed in the 2013 timeframe include improvements in the biofidelity of the dummy kinematics. The Phase II research is directed toward developing biomechanical response data for developing future improved child dummies. The Phase III of this research includes design, development, and evaluation of a new prototype 3, 6 and 10-year-old child dummies which is expected to be completed in the 2015 timeframe.

biofidelity for measuring head and knee excursion and that measuring a CRS's ability to limit excursions and chest acceleration provides a meaningful assessment of the protective capabilities of the CRS.

As discussed in the 2010 SNPRM (75 FR at 71655), in 2008, Ash et al.[27] published results of a study comparing the responses of a pediatric cadaver restrained by a three-point belt with that of a HIII–10C dummy in frontal sled tests. The cadaver sled test was replicated using the HIII–10C dummy, and the kinematics of the dummy and cadaver were compared, along with the accelerations of the head, shoulder and lap belt loads of the cadaver and dummy. (Due to anthropometric and age-equivalent differences between the cadaver and the dummy, geometric scaling was performed on the signals based on the seated height and material properties.)

The study showed similarities in the shoulder belt and lap belt forces and head excursions of HIII–10C and the scaled pediatric cadaver. The head excursions between the ATD and the scaled cadaver were similar, although there were differences in how the head reached its maximum excursion point. The T1 vertebra (base of the neck) of the cadaver had greater forward travel than that of the dummy while the dummy experienced greater rotation at the base of the neck than the cadaver. These differences in kinematics were attributed to the rigid thoracic spine of the dummy, along with extensive bending at the cervical and thoracic spine junction. The greater neck rotation at the base of the neck of the dummy compared to the cadaver led to greater angular velocity of the head. This greater head velocity, coupled with the stiff chin-to-chest interaction reported by NHTSA,[28] resulted in significantly higher HIC values for the dummy than that expected based on field injury risk.

Limiting head excursion will provide protection to the child occupant. We strongly disagree with Advocates that a head excursion limit is only a ''rudimentary'' surrogate measure of contact and non-contact head injuries. As discussed above, most head injuries to 8- to 12-year-old children are contact injuries and are due to impact with the vehicle interior. Also discussed above was the similarity between the shoulder belt and lap belt forces and head excursions of the HIII–10C and a scaled pediatric cadaver. Therefore, we believe a limit on the excursion of the HIII–10C dummy's head in FMVSS No. 213 sled tests will mitigate the risk of head contact with interior surfaces in frontal crashes, and thereby result in reduced risk of head injury to heavier children restrained in CRSs. For that reason also, the agency disagrees with JPMA's position that the HIII–10C dummy is only appropriate for evaluating the structural integrity of the CRS.

IIHS asked whether the head excursion limits are adequate to prevent children's heads from striking forward structures, especially in the prevention of children sitting in back seats from striking front seats. CHOP recommended that NHTSA consider the head excursions of the HIII–10C as a minimum estimate of the true head excursion.

In response, the agency is currently reexamining[29] how well the test parameters of the FMVSS No. 213 sled test replicate the real world, including test velocity, excursion limits, and the test bench seat.[30] Among other things, this research, targeted for completion in 2013, will help the agency determine if the current head excursion limits need to be revised. NHTSA is also working on improving the biofidelity of the HIII–6C and –10C dummies by implementing revisions to the shoulder, thoracic spine, and neck which can be retrofitted into both the HIII–6C and –10C dummies. We will investigate how these revisions will affect head and neck kinematics of the two dummies.

In the meantime, the agency will adopt the head excursion proposed in the NPRM. The HIII–10C dummy is a reasonable and valuable tool for establishing the maximum head excursion limits.

In a comment to the 2005 NPRM, Advocates stated that children are not adults and should have injury criteria limits scaled to levels lower than those applied to adults. Advocates disagreed with NHTSA's tentative conclusion that ''given the effectiveness of booster seats currently in use, the proposed injury values would be appropriate to ensure continued effectiveness of child restraints recommended for children weighting up to 80 pounds.'' Advocates stated that greater benefits can be obtained if appropriate injury criteria are tailored for children in this age group. In contrast, Graco stated its preference toward the application of the same criteria across all weight ranges and crash test dummies.

In response, it should be noted that in the TREAD Act rulemaking (final rule, 68 FR 37620), NHTSA considered adopting the scaled injury criteria adopted by FMVSS No. 208. NHTSA proposed that the FMVSS No. 208's scaled HIC limits of 390_{15}, 570_{15} and 700_{15} be incorporated into FMVSS No. 213 for tests with the CRABI 12-month-, and Hybrid III 3- and 6-year-old dummies, respectively. However, NHTSA decided against adopting the scaled injury criteria because the agency was unable to confirm the existence of a safety problem that the scaled injury limits of FMVSS No. 208 would remedy. Relatedly, not enough was known about what modifications to child restraints could be made for the restraints to meet the proposed injury limits. In balancing the effects of meeting the scaled injury criteria against the possible impacts on the price of restraints, the agency determined that the scaled injury limits should not be added to FMVSS No. 213 at that time. (See 68 FR at 37649.)

We continue to believe that the HIC limit of 1000 is appropriate for FMVSS No. 213. However, as NHTSA continuously considers potential improvements to FMVSS No.213, the agency has a series of research projects to generate improved response data for the head, neck, thorax, abdomen, and pelvis for future child dummies. NHTSA will continue to support and monitor this ongoing research and will consider the findings of this research in its efforts to enhance child passenger protection.

Chest Acceleration

The HIII–10C satisfactorily measures chest acceleration, which is a performance criterion adopted by this final rule. A chest acceleration limit is established in FMVSS No. 213 to ensure that the CRS safely manages the crash energy of the 48 kmph (30 mph) crash simulated by the FMVSS No. 213 sled test. Chest acceleration measurement evaluates how well the child restraint and the seat belts allow the occupant to ''ride down,'' or absorb, the crash forces over a period of time in a manner that avoids injury.[31]

[27] Ash, JH, Sherwood, CP, Abdelilah, Y, Crandall, JR, Parent, DP, Kallieris, D., ''Comparison of Anthropomorphic Test Dummies with a Pediatric Cadaver Restrained by a Three-point Belt in Frontal Sled Tests,'' Proceedings of the 21st ESV Conference, June 2009.

[28] Stammen, J., Sullivan, L., NHTSA Vehicle Research and Test Center, ''Development of a Hybrid III 6 Yr. Old and 10 Yr. Old Dummy Seating Procedure for Booster Seat Testing,'' January 2008, Docket NHTSA–2007–0048.

[29] The representativeness of the seat assembly and excursion limit were examined by NHTSA in the rulemaking responding to the TREAD Act. 68 FR 37620.

[30] See, NHTSA Vehicle Safety and Fuel Economy Rulemaking and Research Priority Plan 2011—2013, March 2011, Docket No. NHTSA–2009–0108–0032.

[31] The concept of ''ride down'' can be understood in baseball terms. When you move your hand rearward while catching a baseball, you are ''riding down'' the force from the ball and do not feel any pain due to the impact of the ball on your hand.

Continued

Abdominal Injury

The agency did not propose an abdominal injury criterion in this rulemaking. The 2005 NPRM and 2010 SNPRM discussed some of the agency's research projects that are exploring changes to the ATDs to measure abdominal loads.

In response to Advocates' comment that NHTSA should adopt the Abdominal Injury Ratio (AIR) injury criterion at this point until research on an instrumented abdomen is completed or an alternative abdominal injury measure established, there is not enough information at this time to support the AIR criterion. NHTSA discussed in the NPRM the development of AIR but did not propose the AIR criterion. As stated in the 2005 NPRM, we will continue to explore different techniques to measure abdominal injury, such as measuring abdominal loads directly with an abdominal insert under development. This issue is discussed in more detail in the accompanying 49 CFR part 572 final rule published today.

We are hopeful that the instrumented abdominal insert under development could be retrofitted into the existing HIII–6C and HIII–10C dummies. The goal is for the abdominal insert to provide direct measurement of abdominal loads on the dummies and facilitate the agency's ability to determine abdominal injury and submarining potential in frontal sled tests. However, adopting an abdominal injury measure at this time would be premature.

For immediate use now, the agency has adopted the use of a correlate to abdominal injuries, i.e., knee excursion. This final rule for FMVSS No. 213 imposes limits on knee excursion and head excursion for the HIII–10C. The limit on knee excursion prevents restraint manufacturers from controlling head excursion by designing their restraints so that children submarine excessively during a crash. The agency has observed a strong correlation between knee excursion and submarining in the child dummies.[32]

The agency is not proposing to test the dummies seated in an out-of-position state (i.e., slouched position). The agency believes out-of-position testing would unnecessarily increase the testing burden. We also believe that achieving an acceptable, repeatable, and reproducible out- of-position test would take a substantial amount of time and agency resources due to the difficulty of positioning the dummy in a consistent manner, when not seated as intended. We have not found a safety need that would justify further complications and delays in this rulemaking that would result from developing out-of-position requirements.

2. HIII–6C Dummy

We do not agree with the suggestion from Evenflo to suspend the use of HIC for the HIII–6C dummy. Some CRS manufacturers are using the HIII–6C dummy to certify the compliance of their CRSs to FMVSS No. 213 and have found the dummy to be a satisfactory test instrument even with the use of HIC as an injury measure. The manufacturers have developed products that are able to meet the HIC criterion and that are able to limit hard chin-to-chest contact of the ATD. We do not find good reason to suspend the criterion for those products.

We realize that, for some manufacturers of products, using the HIII–6C dummy to certify the product has been problematic. The agency believes it would be prudent to improve the HIII–6C dummy to make it more useful as an FMVSS No. 213 test device before making its use mandatory. On September 9, 2011 (76 FR 55825), NHTSA issued a final rule that permits, at the manufacturer's option, the use of either the Hybrid II 6-year-old child dummy (H2–6C) or the HIII–6C dummy in compliance tests of CRSs. Products that are currently certified as meeting FMVSS No. 213 when tested with the H2–6C need not be removed from the market, contrary to what Evenflo suggests. Therefore, we see no need to suspend the use of HIC for the HIII–6C dummy.

d. UMTRI Positioning Procedure

Generally described, the UMTRI procedure, developed for the HIII–6C and HIII–10C dummies, first involves centering the belt-positioning seat on the seating position of the test bench seat. A 30 lb (133 Newton (N)) force is then applied to push the belt-positioning seat rearward into the test bench seat. The dummy is prepared with a lap shield and a pelvis positioning pad before being positioned on the belt-positioning seat. The lap shield is placed on the ATD's lap to keep the lap belt from intruding into a gap that the Hybrid III ATDs have between the pelvis flesh and thigh flesh. A pelvis positioning pad, placed behind the dummy, is used to help position the dummy with a slight slouch, which allows the dummy to adopt a posture similar to a child seated in a relaxed position. The dummy is positioned and centered on the belt-positioning seat or other CRS and is pushed rearward by applying a 40 lb (177 N) force on the dummy's lower pelvis and the thorax. The dummy's knees are placed pelvis width apart. These steps help the dummy achieve a ''natural'' seating position on the belt-positioning seat.

The UMTRI dummy positioning procedure results in a more slouched dummy when compared to the 2008 SNPRM procedure using the same belt-positioning seat model. The slouched dummy, replicating a child in a relaxed position, results in higher HIC values than if the dummy were in a more upright position.

Comments

All but one of the commenters were supportive of using the UMTRI positioning procedure to test the HIII–6C and HIII–10C dummies in belt-positioning seats, believing that the procedure would position the ATDs in a more realistic seating posture than the 14 degree torso angle positioning procedure. Several commenters did not support the UMTRI positioning procedure's inclusion of a pelvis positioning pad.

Evenflo opposed the inclusion of the UMTRI positioning procedure into FMVSS No. 213. NHTSA had stated in the 2010 SNPRM that the UMTRI dummy positioning procedure resulted in the highest torso angles (i.e., a more slouched dummy) when compared to the 2008 SNPRM procedure using the same belt-positioning seat model, resulting in higher HIC values. Consistent with that observation, in its comments Evenflo stated that it believes that the UMTRI procedure yields higher HIC values, and that some products that are currently compliant using the FMVSS No. 213 procedure may have to be removed from the market.

Agency Response

After evaluating the comments and all available information, the agency has decided to adopt the UMTRI dummy positioning procedure for the HIII–6C and HIII–10C dummies in belt-positioning seats, with the exception of the provision for use of the pelvis positioning pad for the HIII–6C dummy.

The UMTRI dummy positioning procedure was developed from a laboratory study funded by NHTSA. In this study, UMTRI measured the

If you held your hand stationary while catching the ball, the impact on your hand would be painful. With the chest g limit in FMVSS No. 213, the CRS will have to dissipate the crash forces in a controlled manner, so that the child will have a greater likelihood of safely riding down the crash forces.

[32] Klinich, K., Reed, M., Orton, N., Manary, M., Rupp, J., ''Optimizing Protection for Rear Seat Occupants: Assessing Booster Performance with Realistic Belt Geometry Using the Hybrid III 6YO ATD,'' UMTRI Report, University of Michigan, Ann Arbor, MI, March 2011.

postures of 44 boys and girls 5 to 12 years in age in five different belt-positioning seats and a vehicle seat.[33] Using these data, UMTRI developed a positioning procedure for the HIII–6C and the HIII–10C dummies such that the dummy posture was representative of the average posture of children of similar size in the belt-positioning seats. Due to differences in child and dummy anthropometry, a pelvis positioning pad placed behind the dummy was needed to help position the dummy with a posture similar to that of a similar-size child seated in a relaxed position in a belt-positioning seat.

We have determined that the UMTRI procedure should be incorporated into FMVSS No. 213 for the reasons explained in the 2010 SNPRM. The UMTRI procedure is relatively easy to implement, and does not require numerous positioning iterations as did the procedure proposed by the 2008 SNPRM. The procedure is very similar to the procedure NHTSA currently uses to position ATDs in child restraints for the FMVSS No. 213 compliance tests. However, the UMTRI procedure includes additional steps throughout the procedure, which facilitates more control of the CRS, the ATD, and the positioning of the seat belt, which results in reduced variability in the test procedure.

The UMTRI procedure lets the belt-positioning booster design dictate the posture of the dummy and the belt routing, so it results in a more accurate assessment of the CRS's characteristics than a procedure (proposed in the 2008 SNPRM) which tries to achieve a rigid positioning of the dummy in the CRS. The UMTRI procedure lets the dummy replicate a posture a child would adopt in a relaxed, seated position.

Importantly, the UMTRI procedure showed reasonable repeatability for all injury measures (with the exception of HIC). See discussion in the 2010 SNPRM, 75 FR at 71652–71653. (The HIII–10C dummy's neck and lumbar spine can be adjusted to different preset angles. To control for extraneous variables, this final rule is specifying setting the adjustment angle for the dummy's neck at SP–16 [34] and that for the lumbar spine at SP–12.[35])

With regard to Evenflo's comment, this final rule does not apply the UMTRI procedure to CRSs other than those tested with the HIII–6C and the HIII–10C ATDs. With regard to the HIII–6C, this final rule does not specify use of the pelvic positioning pad with the HIII–6C dummy (see discussion in next section below). With regard to the HIII–10C, this final rule does not adopt the HIC criterion. To our knowledge, with those allowances in this final rule, no product that is currently compliant using the FMVSS No. 213 procedure will become non-compliant. Thus, we believe that Evenflo's concerns about the UMTRI procedure have been addressed.

Pelvis Positioning Pad

JPMA opposed the pelvis positioning pad for testing belt-positioning seats with both the HIII–6C and the HIII–10C dummies, stating that the pelvis positioning pad adds another variable into the testing procedures and would increase the pre-test torso angle of the dummies, which would increase the likelihood of hard chin-to-chest contact, thus exacerbating the variability of HIC scores. Evenflo also opposed the pelvis positioning pad, stating that, while there may be some evidence that children may sit more reclined than the test dummy, using the pad results in an artificial orientation that would be inconsistent with manufacturer's instructions. Evenflo added that the additional recline of the dummy may exacerbate the propensity for high HIC scores as a result of excessive neck movement and/or hard chin-to-chest contact during the dynamic test.

Agency Response Regarding the Pad and the HIII–6C

This final rule does not specify the use of the pelvis positioning pad for tests with the HIII–6C dummy.

We recognize that some manufacturers are currently using the HIII–6C dummy to certify the compliance of their CRSs to FMVSS No. 213, and that they are positioning the dummy, and measuring HIC, as currently required by FMVSS No. 213. The UMTRI positioning procedure without the pelvis positioning pad is very similar to the method of positioning the dummy in a belt-positioning seat specified in FMVSS No. 213. We have decided to keep the UMTRI procedure as close as possible to the present FMVSS No. 213 procedure, so that manufacturers currently using the HIII–6C dummy to certify the compliance of their CRSs to FMVSS No. 213 will not have to alter their CRS designs to certify compliance using the UMTRI positioning procedure with the HIII–6C dummy.

We agree with JPMA and Evenflo that the presence of the pelvis pad may result in a greater dummy torso angle than the current specified positioning procedure in FMVSS No. 213. Since the agency sled tests indicated that the dummy's torso angle affects the HIC values measured—higher torso angle may result in higher and more variable HIC values and a greater propensity for submarining—we agree with JPMA and Evenflo that the pelvis positioning pad may exacerbate the propensity for high HIC scores. So as not to magnify the HIC scores in this manner, we will not use the pelvis positioning pad with the HIII–6C ATD.

Agency Response Regarding the Pad and the HIII–10C

This final rule will use the pelvis positioning pad for the HIII–10C dummy in the UMTRI positioning procedure, as proposed in the 2010 SNPRM.

Since this final rule does not apply the HIC criterion to tests with the HIII–10C dummy, the concerns raised by the commenters that the pelvis positioning pad results in higher HIC measures in tests with the HIII–10C are moot.

Evenflo believes that the pelvis positioning pad creates an artificial orientation that would be inconsistent with manufacturer's instructions, and contrary to NHTSA's general practice to test CRSs in the manner set forth in the owner's manual. NHTSA disagrees that the orientation is artificial. The UMTRI laboratory test data shows that the pelvis positioning pad allows the dummy to adopt a posture similar to that of a child of a similar size in a belt-positioning booster seat. We believe that the pelvis positioning pad enhances the representativeness of the HIII–10C ATD of children for whom the CRS is recommended, and makes for a more robust assessment of the effectiveness of the CRS in protecting a child occupant.[36]

[33] Reed, M., Ebert-Hamilton, S., Klinich, K., Manary, M., Rupp, J., ''Assessing Child Belt Fit, Volume I: Effects of Vehicle Seat and Belt Geometry on Belt Fit,'' University of Michigan Transportation Research Institute (UMTRI) Report to NHTSA, September 2008, *http://deepblue.lib.umich.edu/bitstream/2027.42/64459/1/102442.pdf* (last accessed Sept. 6, 2011).

[34] See Figure 20 of the ''Procedure for Assembly, Disassembly, and Inspection (PADI) of the HIII–10C,'' August 2011, which has been placed in the docket of the 49 CFR part 572 final rule published today to accompany this final rule.

[35] See Figure 45 of the PADI document, *supra.*

[36] The desire to maximize the representativeness of the test dummy must be balanced with other factors. With regard to the HIII–6C dummy, HIC is still measured. NHTSA has determined that the HIC measurements would not be realistic reflections of the ability of the CRS to protect the child occupant if the dummy depicted a child in a relaxed position, i.e., if the pelvic positioning pad were used. Thus,

Continued

This final rule also slightly modifies the specifications for the pelvis positioning pad from that proposed in the 2010 SNPRM. The final rule specifications are more general than the proposal, so as to provide flexibility in selecting material for the pelvis positioning pad while ensuring repeatable and reproducible performance. The compression set specifications for the pelvis positioning pad proposed in the 2010 SNPRM have not been adopted since they are not necessary for ensuring that the pad has good repeatability in FMVSS No. 213 dynamic sled tests. The proposed range of acceptable compression resistance in the compression-deflection test and the density of the foam have been increased, to provide flexibility in selection of material while ensuring performance that is repeatable and reproducible.

The pelvis positioning pad in this final rule is describes as: A 125 × 95 × 20 mm piece of closed cell (Type 2 according to ASTM D–1056–07) foam or rubber with compression resistance between 9 to 17 pounds per square inch (psi) in a compression-deflection test specified in ASTM D–1056–07 and a density of 7 to 12.5 lb/ft^3. This final rule incorporates by reference ASTM D–1056–07 into FMVSS No. 213.

Lap Shield

The UMTRI positioning procedure uses a lap shield to prevent the lap belt from getting caught between the pelvis and thigh of the dummy. We have decided to use a lap shield for the reasons set forth in the 2010 SNPRM,[37] but have corrected the figure depicting the form.

JPMA supported the UMTRI procedure and use of the lap shield but noted that the hip width of the HIII–10C is two inches wider than the HIII–6C dummy. The commenter asked whether the 2010 SNPRM intended to specify the use of the same lap shield for both dummies.

Agency Response: UMTRI has conducted sled tests with the HIII–6C and the HIII–10C dummies using the same lap shield for both dummies, and the results indicate that the same size lap shield is sufficient for both ATDs.[38] However, NHTSA has examined the lap shield that was depicted in proposed Figure 13 of the SNPRM and found that the dimensions of the lap shield drawing were incorrect, as they were significantly larger than the lap shield that UMTRI has used with the dummies. We have revised the lap shield drawing for this final rule with the correct dimensions.[39]

Lap Belt Tension

Concerning the specification for lap belt tension, the agency is not adopting the proposed sections S10.2.3 (d)(1) through (7) from the 2010 SNPRM, and is instead adopting an instruction to simply attach the vehicle belts and tighten them as specified in S6.1.2. We did not adopt the proposed instructions because they were specific to continuous belts. FMVSS No. 213 currently does not specify the use of continuous belts and thus the SNPRM's provisions for a continuous belt system were not relevant to the FMVSS No. 213 belt system.

Applying the Procedure to Other ATDs

In the 2010 SNPRM, the agency requested comment on whether the UMTRI procedure should be extended to dummies other than the HIII–10C and the HIII–6C dummies in belt-positioning seats. The current FMVSS No. 213 procedure and the UMTRI procedure are very similar, except that the UMTRI procedure includes additional steps controlling the positioning of the CRS on the standard seat assembly, the positioning of the dummy, and positioning of the seat belts.

In its comment, JPMA stated that since its members have no testing experience using the UMTRI procedure with other dummies, the JPMA does not support using this procedure at this time with other dummies.

NHTSA has decided not to apply the UMTRI procedure to ATDs other than the HIII–6C and the HIII–10C dummies. We are not aware of a need to apply the UMTRI procedure to the other ATDs. Some CRSs were tested with the HIII–3C dummy. In those tests, the ATD was positioned on the CRS using the current FMVSS No. 213 procedure. Changing the positioning procedure for the HIII–3C dummy to use the UMTRI procedure would require developing and evaluating a different size lap shield and pelvis positioning pad, endeavors for which agency time and resources are not available, and for which we do not see a need at this time.

e. LATCH Issues

The agency proposed in the 2010 SNPRM that a harness-equipped CRS tested with the HIII–10C dummy would be attached to the standard seat assembly with the seat belt system and would not be tested with the lower anchorages of the LATCH system. The agency proposed this restriction based on a comment[40] from the Alliance to the 2008 SNPRM requesting the amendment. The Alliance explained:

> When NHTSA adopted FMVSS No. 225, ''Child Restraint Anchorage Systems,'' and made corresponding changes to FMVSS No. 213 to require CRSs to comply with that standard when tested utilizing Lower Anchorage and Tethers for CHildren (LATCH) anchorages, the LATCH systems in vehicles were intended for use by children up to 48 pounds. No vehicle manufacturer recommends the use of LATCH anchors with children that even approach the weight of the 10-year-old dummy. And although some CRS manufacturers are offering harness-equipped CRSs that are recommended for use by children that weigh up to 65 pounds, it is the Alliance's understanding that they explicitly instruct parents and caregivers to use the vehicle belts rather than the LATCH anchorages when using such a CRS with a child that weighs more than 50 pounds.

In the 2010 SNPRM, NHTSA also explained our view that, if NHTSA would not test a CRS with LATCH using the HIII–10C even though the CRS is recommended for use by children weighing over 29.5 kg (65 lb), then we believed that the CRS should bear a label informing the consumer not to attach the CRS with LATCH when restraining a child weighing more than 65 lb. The consumer would be instructed to use the seat belt system instead of LATCH. NHTSA proposed the labeling requirement to reduce the likelihood that a consumer would use the CRS with LATCH attachments when restraining heavier children and risk possible failure of the interface or the anchor system.[41]

for the HIII–6C, the agency has decided that, in order to obtain a valid HIC measurement, we will not to use the pelvic positioning pad to place the dummy in the ''relaxed'' position.

[37] In our tests leading up to SNPRM No. 2, we did not use the lap shield. In none of our tests did the lap belt get caught in the gap between the pelvis and thigh. However, we have decided that the lap shield should be specified for use in the FMVSS No. 213 compliance test to avoid the possibility that the lap belt could get caught in the thigh/pelvis gap. Thus, in the regulatory text adopted today, we specify use of the lap shield.

[38] The lap shield adheres to the dummy with double-sided tape, and because of this and its flexibility, conforms to the shape of the dummy's pelvis and thighs. Thus, only one lap shield is needed.

[39] See ex parte memorandum in Docket No. NHTSA–2010–0158.

[40] Docket No. NHTSA–2007–0048–0008, page 7.

[41] There is also disparate messaging to consumers that needs to be addressed. Some CRS manufacturers of harness-equipped CRSs that are recommended for children weighing up to 65 lb, explicitly instruct the consumer to use the vehicle seat belt rather than the LATCH lower anchorages with a child that weighs more than approximately 50 lb. However, some CRS manufacturers do not prohibit the use of LATCH for CRS installation even when used by children weighing 65–80 lb. Vehicle manufacturers are largely silent about the recommended child weight limit for LATCH installation. Some vehicle models specify in the owner's manual a child weight limit of 40 to 48 lb for LATCH installation, while a few models specify

Comments

The proposal that the agency will not assess the CRS using LATCH when conducting compliance tests of CRSs with the 10-year-old dummy was generally supported by the commenters. In opposition was Sunshine Kids (SSK), which believed that the HIII–10C should be used to test the LATCH system of a CRS that has a stated capacity above 65 lb. SSK believed that consumers will use the LATCH system even if there is a label with a stated weight limit. SSK supported a certain dynamic approach that would enable CRS manufacturers to produce harness-equipped CRS for children up to 80 lb. JPMA also expressed a preference to use, in the future, a ''dynamic test to define the labeling required on the CRS, if any, and define the testing for installation with LATCH based on the LATCH use limit specified on the CRS.'' JPMA indicated that this approach is under development by an inter-industry working group.

There was widespread support for a label providing a weight limit as a means of providing needed information to the consumer. Many urged changes to the content of the labeling.[42] Safe Ride News urged NHTSA to consider that it must be the CRS manufacturer, not the vehicle manufacturer, that determines the LATCH limit for each car seat model, and CRS manufacturers should be required to determine such limits for all models. The Alliance and the Association of Global Automakers (Global Automakers) (formerly known as the Association of International Automobile Manufacturers (AIAM)) jointly urged the agency to adopt a requirement that CRS labels provide a maximum weight recommendation that is specific to each restraint model, based on the difference between 65 lb and the actual weight of the restraint.

Several consumer advocates believed that a label was needed also to address the different messages consumers receive from CRS and vehicle manufacturers on LATCH usage. There is consumer uncertainty about the strength of the LATCH anchors to withstand the forces of a CRS restraining an older child (i.e., how long before LATCH should no longer be used to attach the CRS and when the belts should be used instead). CU stated: ''whether or not the research demonstrates the ability of the LATCH anchors to withstand child masses greater than 65 pounds, a clear message needs to be provided to consumers as to what such limits are.''

The Alliance and many others were concerned that the proposed wording that referred to a 65-lb child weight limit did not adequately account for the weight of the CRS, and thus may be providing misinformation. The Alliance indicated that the 2010 SNPRM's discussion of the reasons for the 65-lb child weight limit did not recount accurately enough the agency's analysis in the FMVSS No. 225 rulemaking that supported the 15,000 N LATCH anchorage load requirement (response to petitions for reconsideration, June 27, 2003, 68 FR 38208, 38218). The commenter believed that, because both the terms ''child'' and ''child + CRS'' were used in the FMVSS No. 225 analyses, the 2010 SNPRM's reference to ''the child's weight of 65 lb'' alone was inaccurate since the LATCH load requirements were developed using a *combined* maximum ''child + CRS'' weight of 65 lb. The Alliance believed the label should refer to the combined weight.

The Alliance stated that referring to the combined weight would also accord with vehicle manufacturer recommendations to discontinue the use of LATCH when the child is in the 48-lb range. That is, it is assumed that the weight of the CRS is about 15 lb, so a child in the 48-lb range, plus the typical weight of the CRS (15 lb), leads to a combined weight of approximately 65 lb.

Child restraint manufacturers differed in their response to the proposal. JPMA expressed a preference for an approach that uses a dynamic test to define the labeling required on CRS, but recognized that such an approach is not developed at this time. Commenting on the labeling proposal, the commenter recommended limiting the use of the LATCH system to children weighing 48 lb or less, until the joint industry study is completed. JPMA explained that the 48-lb recommendation was based on a total mass of 65 lb attached to the LATCH anchorages, which includes the mass of the CRS. The commenter stated that the recommendation is supported by the agency's calculations for the FMVSS No. 225 load requirements, and is consistent with most LATCH use limits defined by vehicle manufacturers.

Evenflo referred to work underway by vehicle and CRS manufacturers seeking to determine the maximum force exerted on the lower anchors by an occupied CRS under severe crash conditions. According to the commenter, the intent is that CRSs ''exceeding this force threshold in laboratory testing be labeled accordingly so to alert caregivers to discontinue using the lower anchor system once the child reaches a specified mass, which will vary based on the specific design of the child restraint system.'' Evenflo stated that this would allow more flexibility for CRS manufacturers to offer CRSs with internal harnesses that can be used to higher weight limits when installed with the lower anchors. Evenflo acknowledged that ''[i]n the interim, a more conservative threshold based on occupant mass can be used,'' which NHTSA understands to refer to the proposed label. Evenflo suggested that the label(s) should include the alert symbol and warning caption on a contrasting background and should be placed at or near the location where the lower anchor system attaches to or enters the child restraint to better draw attention to it.

As noted above, Sunshine Kids (SSK) supported an alternative approach rather than the proposed approach. It suggested that, ''[u]sing the dynamic capacity for lower anchors and top tether is a more practical approach to determine the LATCH capacity of child restraints.'' SSK stated that this approach would require all child restraints to be tested to a structural validation test that would measure the lower anchor load using the largest stated occupant capacity of the CRS for the dummy in the test. SSK provided a research paper in which 12 kN was assumed as a safe dynamic load limit for the LATCH lower anchors in NCAP-type crash testing, when using a size-appropriate dummy for a particular CRS model. SSK stated: ''[L]oad limitation is designed into the structural assembly of the Radian [produced by SSK], effectively limiting the Lower Anchor loads to 12 KN for any ATD configuration under 35 mph 47 G sled pulse loads.'' The commenter believed that by requiring all CRSs to be tested under what the commenter believed to be a worst case loading, the consumer would be assured that the LATCH system and the CRS are designed around a maximum dynamic load that, the commenter believed, will not exceed the structural limits of the vehicle. SSK believed that this approach will allow the most freedom to design restraints that can fit large occupant weights and can work within the proposed dynamic limit of 12 kN for each lower anchor attachment in the vehicle.

a higher weight limit for LATCH installation of up to 50 lb child weight and permit tether anchor use for children weighing up to 60 lb. These differing weight limits have created confusion among consumers.

[42] These will be discussed below. Main points involved: the reference to the weight of the child alone versus the combined weight of child and CRS; distinguishing lower anchorage use from upper tether anchorage use; and allowing provision for securing booster seats so they do not become projectiles in a crash.

Britax requested the proposed warning language be revised to permit the use of LATCH anchors for belt-positioning seats equipped with LATCH. Britax stated that some CRS manufacturers recommend the use of LATCH with the boosters solely to secure the booster, to ensure that if unoccupied, the booster will not become a flying projectile (and injure other vehicle occupants) in a vehicle crash. (This suggestion was echoed by JPMA and the Alliance.) Britax added that the occupant of the belt-positioning seat is secured by the vehicle seat belts and those vehicle seat belts would bear the occupant load in a motor vehicle crash, so the child occupant in the booster seat does not load the LATCH anchors.

SafetyBeltSafe asked that the label permit the top tether anchorage to be used to a higher weight of child occupant than the lower LATCH anchorages. The commenter stated that vehicle manufacturers often state or imply that 40 lb is the top weight that is acceptable for tether anchor use, but that Transport Canada testing has tested heavy dummies in seats using tether anchors and lower anchors with no failures. In its comment, Safe Ride News pointed out that while lower anchors have a functional alternative in the form of seat belts, the tether system does not usually have an alternative method. Safe Ride News asked NHTSA to be mindful of extending the option of tether use whenever possible, since ''adding a tether to installation greatly increases the performance of a forward-facing car seat.'' The commenter encouraged NHTSA ''to be careful in any rulemaking regarding testing and labeling to be certain that it does not inadvertently discourage or unnecessarily limit tether use.''

That view about the benefits of using the tether anchor to higher weights than the lower LATCH anchorages have been echoed by other parties in the context of other CRS programs. On February 25, 2011, NHTSA published a document requesting comments on a CRS-to-vehicle fit program that the agency was considering establishing under NHTSA's New Car Assessment Program (NCAP).[43] Some commenters to that NCAP document suggested that the upper tether should be permitted for use with heavier/older children in harnessed CRSs since real world data indicates benefits of tether use and no adverse effects when used for heavier children. Some indicated that tether use should be permitted for children weighing up to 65 lb (child occupant weight alone, not combined with CRS).

Agency Response

All relevant issues raised by the commenters on the LATCH issue are addressed below.

1. The Label [44]

The agency believes that a label on the CRS with a clear and consistent message to consumers regarding lower LATCH anchorage use is an appropriate means of reducing the likelihood that CRSs are attached to the vehicle seat with lower LATCH anchorages when occupied by children too heavy for the lower LATCH anchors. This would help prevent lower LATCH anchor loads from exceeding their required strength level specified in FMVSS No. 225. Such consistent labeling will reduce confusion regarding LATCH use amongst parents and caregivers and result in reduced misuse.

2. Combined Weight

While the 2010 SNPRM proposed the label to have a 65-lb child weight limit, the agency agrees with the Alliance and others that the 65-lb weight limit should be the *combined* weight of the child and the weight of the CRS. In calculating the appropriate strength requirements of FMVSS No. 225, NHTSA based its calculations on an assumption that a combined weight of 65 lb (from the CRS + child) would be attached to the LATCH anchors (68 FR at 38218). This matter is of more significance today than before because CRSs have substantially increased in mass since the LATCH rulemaking, and children are riding in harnessed CRSs longer. At the time of the LATCH rulemaking, CRSs weighed on average about 15 lb and children were in harnessed CRSs until about age 4. Now, CRSs are heavier, with some weighing up to 30 lb, and there are harnessed CRSs marketed for children who weigh up to 80 lb.

3. Account for Weight of CRS

Similar to the Alliance, JPMA recommended that the label should state a weight limit for the child of 48 lb, rather than a child weight of 65 lb, to be more consistent with the analysis performed by the agency in setting the FMVSS No. 225 strength requirements. We concur with the commenter's view that the NPRM's reference to the child weight of 65 lb was not correct, the NPRM reference should have been to the combined weight of the CRS and the child. We note, though, that while having all CRSs refer to a single child weight of 48 lb has simplicity, there are some safety concerns with such an approach. Currently, there are some very heavy CRSs being produced, some weighing nearly 30 lb. If those very heavy CRSs had a label indicating that they could be used with LATCH with children up to 48 lb, the LATCH anchors could be overloaded in a crash (30 lb CRS+48 lb child).

Safe Ride News also raised concerns about a requirement that required all CRSs to reference a singular child weight. The commenter thought it would be confusing if there were, say, a manufacturer of a ''high-weight harness seat'' that intended its seat to only be used with LATCH with children up to 50 lb. If NHTSA required the CRS to be labeled with a warning against use with LATCH when the child reaches 65 lb, the consumer could be misled to believe the CRS can be used until the child reaches 65 lb. Safe Ride News believed that clear labeling regarding upper weight limits for each model is a better solution.

After considering all the comments on this issue, NHTSA has decided to modify the proposed label requirement, to take a more direct approach than referencing a single weight to be included on all CRS labels. As explained above, we are using combined weight (CRS + child) rather than child weight alone. The label will be unique to each CRS model equipped with an internal harness, for which the combined weight of CRS and the maximum recommended child weight for use with internal harness exceeds 65 lb. Such CRSs will have to be labeled with information instructing the consumer that the LATCH lower anchorages may be used to attach the CRS to the vehicle seat when restraining a child weighing *x* lb or less using the CRS's internal harness. The ''x'' value is 65 lb minus the weight of the CRS. The x value indicates the maximum weight of the child for which the LATCH lower anchorages can be used such that the combined weight (weight of CRS + child) does not exceed 65 lb. We believe that this approach is clearer to the consumer, because the caregiver is likely to know the weight of the child better than the ''combined'' weight of the CRS + child. The clear and direct information will reduce the risk that the consumer will keep the child attached to the vehicle via the LATCH lower anchorages beyond the design parameters of the LATCH system.

[43] 76 FR 10637, Docket NHTSA–2010–00062.

[44] The following requirements apply only to CRSs equipped with an internal harness to restrain the child and with components to attach to a LATCH system, and for which the combined weight of the CRS and the maximum recommended child weight for use with the internal harness exceeds 65 lb.

4. Top Tether

A significant portion of the harm to children resulting from motor vehicle crashes could be prevented by the tether. Accident data from NHTSA's NASS CDS data files from 1995–2007 indicate that 39 percent of AIS 2+ injuries to children 0–12 years of age restrained in rear seating positions in frontal crashes were to the head and face, with 60 percent of these injuries resulting from contact with the seat and back support. Sled test data indicates that use of the upper tether reduces head excursions of the occupant restrained in the CRS and therefore, reduces the likelihood of head impacts against the vehicle structure.[45]

Tethers provide much more secure attachment of child restraints compared to being attached by the seat belt only or lower LATCH anchors only. In particular, they provide more rigid attachment at the top part of the child restraint, so that the CRS can ''ride down'' the crash while the vehicle is crushing. This considerably reduces excursion of the child's head relative to the vehicle interior, so the head is far less likely to hit other parts of the vehicle interior—the most likely cause of serious injury to a properly restrained child. A study in New South Wales, Australia found that top tether use was extremely effective in reducing injuries to children in CRSs.[46]

CRSs are required by FMVSS No. 213 to meet a minimum head excursion limit (a 32-inch requirement) without use of the tether. CRSs must also meet an enhanced head excursion requirement (28-inch) where a tether may be used to meet the more stringent requirement. Some child passenger safety consumer advocates suggest that the risks associated with the tether not holding in a crash are small[47] and so the use of the top tether should not be limited by the weight of the child.

Although there are demonstrable benefits associated with a top tether, we are not convinced that tether use should be unlimited, i.e. that there need not be any weight restriction on use of the tether. Not enough is known about the consequences of not having any weight restriction on the use of the tether anchorage. Field data do not indicate any failure of tether anchors, likely because only few higher-weight rated harnessed-CRSs are in use by children weighing more than 50 lb. We believe that more field and research data are needed to determine reasonable limits for the combined child + CRS weight, to ensure that the tether anchor does not fail in most crash conditions, and to explore the consequences that may result from overloading the tether anchorage. The agency has initiated a research program to address weight limits for LATCH use, and the Alliance, JPMA, and Global Automakers also have been researching LATCH use weight limits. The agency will be able to better assess weight limits for the top tether after the research is complete. For now, the agency is not requiring a commensurate label on weight limits for use of the top tether.

4. Testing With the HIII–10C

We agree with the Alliance and others that the LATCH load requirements in FMVSS No. 225 (68 FR 38218) were developed to ensure that the vehicle LATCH anchorages would be able to withstand forces resulting from a 65 lb mass in a severe crash of a vehicle into a rigid barrier (peak CRS acceleration of 48.4 gs). Using the HIII–10C dummy (weighing almost 80 lb) to test the CRS using the lower LATCH attachments could exceed the assumptions behind the strength requirements of FMVSS No. 225. Accordingly, we believe that use of the ATD in such tests of the CRS would be unreasonable, since the LATCH system as a whole was not designed with such use in mind. Therefore, the agency will not attach CRSs using lower LATCH anchors in compliance tests when using the HIII–10C dummy. (See newly adopted paragraph S5(f) in the regulatory text.) However, as explained earlier, the top tether is used for meeting the enhanced head excursion requirements in FMVSS No. 213 and the agency will test harness equipped CRSs with and without tether attachment when using the HIII–10C dummy.

In coming to this position, we are mindful to view the LATCH system as a whole. It would not make sense to require CRSs to meet a LATCH performance requirement if vehicle manufacturers, for good reason, are not permitting the CRSs to be installed in their vehicles using LATCH. We also must be mindful that developments in CRS technologies must be compatible with vehicle technologies, and vice versa, when it comes to child passenger safety, since the interaction between CRSs and the vehicle in protecting occupants is crucial. (Incompatibilities between CRS and vehicle designs were the reasons NHTSA commenced the LATCH rulemaking which resulted in FMVSS No. 225.)

In response to SSK which wanted us to test CRSs with the HIII–10C when attached to LATCH in part due to concerns about consumer misuse, the label required by this final rule will reduce the likelihood of consumers misusing the LATCH lower anchorages to attach harness-equipped CRSs for which the LATCH system was not designed. This rule requires CRSs to provide information about lower LATCH use limits that is very specific to each CRS model. Consumers will be provided information on lower LATCH use limits that is clearer than ever. This clear instruction will facilitate the consumer's understanding—and that of any child seat fitting station technicians assisting them—of when they should transition from the LATCH system and reattach the CRS using the seat belt system.

Evenflo also expressed concern about misuse, but noted that, to date, it was unaware of any real world data to suggest that misuse of this type was an issue. The agency did not receive data or comments on this issue from any other commenters. The agency believes that the label required by the final rule to be on the CRS, which provides a clear and consistent message regarding lower LATCH use, improves the current situation where no information or inconsistent information is typically provided the consumer. The information will help ensure that CRSs are not attached using lower LATCH anchors to the vehicle seat when occupied by children of weights outside of the design parameters of the lower LATCH system.

As noted above, the agency also has initiated a research program to address various issues with LATCH, and will be examining the weight limit for LATCH use. NHTSA also is aware of the project of the Alliance, the JPMA, and the Global Automakers to determine LATCH use limits.[48] However, an alternative to specify LATCH weight limits based on a dynamic assessment, as suggested by JPMA, Sunshine Kids, and Evenflo, is not developed at this time and may not be available in the foreseeable future. In the absence of a viable dynamic test or other approach, the engineering calculations used in the

[45] Legault, F. Garndner, B., Vincent, A., ''The Effect of Top Tether Strap Configurations on Child Restraint Performance,'' Society of Automotive Engineers, SAE No. 973304, 1997. In addition, the quantifiable safety benefits that NHTSA estimated will accrue from the LATCH rulemaking was due to the tether.

[46] Paine M., Vertsonis, H., ''Surveys of Child Restraint Use in South Wales,'' 2001 ESV Conference, NHTSA, 2001, *http://www-nrd.nhtsa.dot.gov/pdf/nrd-01/esv/esv17/proceed/00237.pdf.*

[47] Comment from Safe Ride News on ''Open Letter to the Curriculum Committee: Tethers Need Special Attention in Next Update,'' http://saferidenews.com/srndnn/srndnn/CPSTsProfessionals/EditorialsfromSafeRideNews/OpenLettertotheNCPSBCurriculumCommittee/tabid/281/Default.aspx.

[48] This work has been on-going since mid-2006.

FMVSS No. 225 rulemaking, *supra,* to determine the LATCH load limits are appropriate.

The agency disagrees with the suggestion of JPMA, Evenflo, SSK, and Safe Ride News that CRS manufacturers should have the sole responsibility of determining the maximum weight limit for LATCH usage when this limit exceeds a combined weight of 65 lb. While the agency does not want to inhibit innovation, the agency believes that more research needs to be conducted in order to allow a higher weight limit for lower LATCH anchor use than the anchorage strength requirement in FMVSS No. 225 when compatibilities between the CRS and the vehicle are at issue.

Although SSK has stated that it has developed CRSs with load limiters that result in reduced lower LATCH anchor loads in sled tests, we know that crash pulse, the geometry and location of the vehicle anchors, the weight of the child and the CRS, and the unique design of the CRS are some of the factors affecting the anchor loads and we do not have enough information to conclude that these CRSs will keep anchor loads below the anchor strength of the vehicle in all configurations and uses in vehicles.[49] The agency believes that a well-considered assessment of these new CRSs would likely entail developing new procedures and requirements for this type of CRS. Such a change in the standard is out of the scope and timeframe of this rulemaking.[50]

The agency will continue to address various outstanding issues with LATCH in a research program we initiated in 2011. The agency will also examine closely the results from the ongoing research efforts by the industry working group to decide LATCH issues in the future, as appropriate.[51]

Under this final rule, harness-equipped CRSs, for which the combined weight of the CRS and the maximum recommended child weight for internal harness use exceeds 65 lb, will not be attached to the standard seat assembly using lower LATCH anchors when tested with a dummy whose weight is greater than the manufacturer-recommended child weight limit for LATCH use. (See S5(f) of the regulatory text.) For example, a harness-equipped CRS weighing 15 lb and recommended for children weighing up to 65 lb, will be attached to the standard seat with a lap belt when tested with the weighted 6-year old dummy since the ATD weighs 65 lb. The weight of the ATD will be greater than the manufacturer-recommended child weight for LATCH use (under this final rule, the label will indicate that the CRS may be used with LATCH lower anchorages up to a child weight of 50 lb (65 lb − 15 lb = 50 lb). On the other hand, when tested with the HIII–6C dummy (which weighs 48 lb), the CRS will be tested separately with the lap belt attachment and with the LATCH attachment.

6. Boosters

In response to Britax and the JPMA, we agree that a child in a belt-positioning booster seat is restrained by the vehicle seat belt and that the LATCH lower anchors will not be excessively loaded if the booster happens to have LATCH attachments. The agency is not aware of any information indicating the use of belt-positioning seats with LATCH is a risk. Therefore, we are excluding belt-positioning seats from the LATCH maximum recommended weight label.

7. Other

1. In response to Evenflo's suggestion to include an alert symbol and warning caption on a contrasting background on the label and to place the label at or near the location where the lower anchor system attaches to or enters the child restraint, this final rule specifies standardized language that should appear on the label and instruction manual of each CRS. The inclusion of the new language on the label will modify the current section S5.5.2(g)(1)(ii) regarding LATCH usage. This label is specified to have a capitalized statement ''WARNING! DEATH or SERIOUS INJURY can occur'' according to S5.5.2(g)(1) and a yellow heading area with the word ''warning'' and the alert symbol in black according to S5.5.2(k)(3)(1). With regard to location, FMVSS No. 213 already specifies the recommended locations for labels which are meant to be visible to the user.

2. In response to a comment from Advocates, we disagree with the suggestion to state on the label that LATCH is the preferred method of CRS attachment for children. LATCH was promulgated to simplify CRS installation and to reduce the continued high incidence of misuse and incorrect installation of child safety seats. However, not all vehicles in the current fleet are equipped with LATCH and not all seating positions in a vehicle are equipped with full LATCH systems. Therefore, seat belts are still used by caregivers to install CRSs in some seating positions. We believe that properly-installed CRSs provide high levels of safety whether installed using LATCH or the vehicle seat belts, and making the suggested statement on the label is unsupported.

f. Lead Time

As proposed in the 2005 SNPRM, this final rule is effective two years after the date of publication of this final rule, meaning that CRSs manufactured on or after that 2-year date are required to meet the requirements of this final rule. Optional early compliance with the requirements is permitted. We believe there is good cause for providing two as opposed to one-year for the effective date. CRS manufacturers will have to assess their products' conformance to FMVSS No. 213 when tested with the new ATD, and will have to gear up to meet new labeling and other requirements as well.

In its comment on the 2005 NPRM, Graco had referred to the spikes observed in the dummy's HIC measurements and suggested that three years of lead time should be provided to allow manufacturers time to gain experience with the HIII–10C dummy, and to make any necessary product design changes. Since this final rule is not adopting the HIC requirement, we believe Graco's concerns about needing time to work with HIC are addressed.

Dorel commented in 2005 expressing concerns about an unavailability of the HIII–10C. We believe many manufacturers are already testing with the HIII–10C dummy and that the final

[49] The April 11, 2011 joint comment from the Alliance and Global Automakers (p. 3) stated that it would support a provision in FMVSS No. 213 that would allow CRS manufacturers to certify their CRSs to a higher maximum weight rating (child+CRS greater than 65 lb) in certain circumstances, with the CRS attached using LATCH or with LATCH+belts simultaneously. The comment stated ''This certification could be based on [an] FMVSS 213-type sled test with modifications to the pulse, test buck or other aspects of the FMVSS 213 test as appropriate for this purpose. In the absence of such certification, testing of restraints that are intended to accommodate larger children (CRS+child weighing more than 65 pounds) should not be tested under FMVSS [No.] 213 using the LATCH system.'' This comment indicates that determining that a CRS is indeed compatible with LATCH in a range of vehicles, crash situations, and CRS use conditions involves a complex evaluation of the factors we mentioned and perhaps more.

[50] The risk of allowing such CRSs at this time when not enough is known about the compatibility factors is the increased risk of anchorage failure in a crash, which can be catastrophic to the child occupant. The risk of catastrophic failure can be avoided by having CRSs for heavier children labeled with an instruction to the consumer to use the vehicle seat belt system when the child attains a certain weight. Seat belts are a readily available, safe alternative for the consumer to use.

[51] The April 11, 2011 joint comment from the Alliance and Global Automakers presented certain scenarios (pp. 2–3) and asked NHTSA to address them in developing consumer labeling and FMVSS No. 213 testing protocols. For the most part, these comments are beyond the scope of this rulemaking.

version of the HIII–10C dummy is very similar to that currently available. This issue is also discussed in the accompanying 49 CFR part 572 final rule.

Graco was concerned about having additional lead time to get adjusted to testing with the HIII–6C. We believe that needing more time to adjust to this ATD is no longer an issue as the agency has permitted manufacturers the choice of NHTSA testing their child restraints with either the H2–6C dummy or the HIII–6C dummy until further notice.

g. Mass Limit

The NPRM requested comment on eliminating the 4.4 kg mass limit for belt-positioning boosters in S5.4.3.2, *Direct restraint,* of FMVSS No. 213. That section states: ''Except for a child restraint system whose mass is less than 4.4 kg, * * * each Type I and lap portion of a Type II vehicle belt that is used to attach the system to the vehicle shall, when tested in accordance with S6.1, impose no loads on the child that result from the mass of the system[.]'' NHTSA sought the amendment because the agency announced in 2003 that it would not enforce the requirement of S5.4.3.2 against belt-positioning seats until further notice. (Letter to John Stipancich; April 11, 2003; Docket No. NHTSA 2003–15005–1.) We believed that it did not make sense to have a requirement in the standard that the agency was not going to enforce. However, in place of the 4.4 kg mass limit, NHTSA was considering whether to propose a chest deflection limit. The agency's concern was about belt-positioning seats over-compressing the child's chest between a bulky booster seat back and the shoulder belt in a crash.

In the NPRM, NHTSA presented data from VRTC tests of the HIII–10C [52] with belt-positioning seats of different mass. The VRTC tests explored whether more massive booster seats caused excessive belt forces. Data from the tests, while limited, did not demonstrate a correlation between seat mass and belt force.

VRTC also examined the relationship between seat mass and the measured chest deflection of an HIII–10C test dummy. The data showed that the heaviest booster tested in the agency's limited test series resulted in the highest measured chest deflection with the HIII–10C test dummy. However, the second heaviest booster resulted in the lowest measured chest deflection.

NHTSA sought comments on a chest deflection limit.

Comments

Britax and JPMA concurred with eliminating the 4.4 kg mass limit. On the other hand, Graco stated that there are insufficient injury data at this time that would support the elimination of the 4.4 kg mass limit for belt-positioning seats. No commenter provided data to augment the VRTC test data.

Britax, Evenflo, and Graco stated that the chest deflection criterion needed further study before being considered for adoption as a performance criterion in FMVSS No. 213. Britax stated that it was important to adopt chest deflection performance criteria only after the biomechanics community has agreed on reasonable limits. Evenflo stated that, to propose the inclusion of a chest deflection requirement in FMVSS No. 213, the interaction between the booster seat mass and dummy response should be better understood.

Agency Response

The agency has decided to amend S5.4.3.2 to exclude belt-positioning seats from the requirement, for the reasons provided in the NPRM. Since the agency is not enforcing the requirement against belt-positioning seats, it does not make sense to retain the requirement. The requirement is removed from FMVSS No. 213 for those CRSs.

At this time, we are not proposing a chest deflection limit to address the risk that a massive belt-positioning seat could overload a child's chest. We have studied the video footage of the VRTC tests of the six belt-positioning seats discussed in the 2005 NPRM and believe there is a possibility that the design of the belt-positioning seat, including mass distribution, flexibility, vehicle seat belt routing and geometry, could have more of an influence on the dummy's chest deflection than the mass of the belt-positioning seat.

We observed that, in a frontal impact sled test of a high back belt-positioning seat, there is initially little relative motion between the dummy and the belt-positioning seat on which it is positioned.[53] As the dummy moves forward and interacts with the lap/shoulder belt, it begins to decelerate while the belt-positioning seat may continue its forward motion (since it is not attached to the sled bench seat, its forward motion is only restricted by frictional forces). Later in the simulated crash event, the seat back of the belt-positioning seat may interact with the dummy's back, whose forward motion is restricted by the lap/shoulder belt.

It is this stage in the event where there may be a potential for the seatback of the belt-positioning seat to load the dummy's back and thereby result in increased loading of the shoulder belt on the dummy's chest. If the seatback of the belt-positioning seat loads the dummy during the time of maximum upper torso excursion when the chest deflection is highest, this seatback interaction with the dummy may result in elevated dummy chest deflection.

We observed through our testing, however, that the different belt-positioning seats loaded the ATD differently. The Britax Bodyguard (Test #9498), which has a mass of 5.98 kg, resulted in the lowest chest deflection of the six belt-positioning seat models tested. The video showed that the back of the belt-positioning seat moved together with the dummy and bent forward following the dummy's back and head movement. This particular design showed a lot of flexibility, and due to the low chest deflection measured by the ATD, we infer that the belt-positioning seatback did not contribute or contributed minimally to the loading of the dummy's chest by the belts.

The Century Next Step (4.28 kg) (Test #9505), Cosco Voyager (3.09 kg) (Test #9493) and Graco Grand Cargo (3.44 kg) (Test #9496) showed that at the time of maximum forward excursion, which coincided with the time of peak belt loading, the belt-positioning seatback was not in contact with the dummy's back. We can deduce that the belt-positioning seatback was not contributing to the loading of the chest at the time of maximum belt loading.

On the other hand, the kinematics of the Century Breverra (4.25 kg) (Test #9495) and Recaro Young Start (8.87 kg) (Test #9497) were less conclusive as the back of the belt-positioning seats appeared to be in contact with the dummy's back at the time of maximum forward excursion. However, it is not clear from the test data if this contact resulted in additional loading to the dummy's chest. The relevant test videos are available on NHTSA's Vehicle Crash Test Database [54] and may be accessed by identifying the test numbers reported in this section.

Our examination leads us to believe that belt-positioning seats can be made to reduce the effect of belt loading of the child's chest. The agency also believes

[52] ''Hybrid III 10-Year-Old Dummy (HIII–10C) Injury Criteria Development,'' supra.

[53] The scenario described here is that when using a deceleration sled system. The sled system only simulates forward movement as described in this paragraph.

[54] *http://wwwnrd.nhtsa.dot.gov/database/aspx/vehdb/querytesttable.aspx.*

that because the loading of the seatback of the belt-positioning seat on the dummy occurs during the rebound phase, after the maximum belt loading, it appears that the risk of chest injury due to the mass of a seat back are lessened. Accordingly, we are excluding belt-positioning seats from S5.4.3.2 altogether.[55]

We recognize that the agency's test data represent a small sample of the variety of belt-positioning seats on the market. We are also concerned about future belt-positioning seats and how they might increase in mass to accommodate larger children. Accordingly, the agency will continue to monitor and collect data on the effect of belt-positioning seat mass on dummy responses.

h. Miscellaneous Issues

1. Housekeeping

This final rule amends S10.2.1 of FMVSS No. 213 to add reference to the 12-month-old test dummy in the heading of that section and to remove reference in the section to the 9-month-old ATD, which is no longer used in compliance tests. References to the 9-month-old ATD are also removed from other sections of the standard. This final rule also removes and reserves S5.2.3.2 and S6.3 (specifying head impact protection requirements for infant restraints manufactured before August 1, 2005) since those sections are obsolete.

2. Belt Fit

For several reasons, the agency did not propose belt fit requirements in this rulemaking. In the 2005 NPRM, NHTSA considered performance requirements for seat belt fit for booster seats or for belt guidance devices, but determined that existing data did not demonstrate that small differences in belt fit resulting from various booster seats translated into associated improvements in the dynamic performance of a belt system in a crash (70 FR at 51726). The agency added that the point at which belt fit degrades the performance of the belts from the point of ''acceptable'' to ''unacceptable'' was not determined.[56] (*Id.*) NHTSA also determined that previous static belt fit studies demonstrated variation in fit could be attributed to the interaction between vehicle designs and the CRSs (i.e., some vehicle-to-booster seat combinations were not as good as others and some booster seats made the belts fit the child dummies better in some vehicles than in others).[57] (*Id.*)

Later, in the 2010 SNPRM, in the context of discussing the UMTRI positioning procedure, we mentioned that we had made observations of UMTRI's belt fit criteria when we were working with the HIII–6C and HIII–10C dummies. The agency stated that the variance and range in repeated measurements, especially for shoulder belt fit, was unacceptably high (75 FR at 71656). The results suggested that the belt-positioning procedure can be influenced by the operator.

Several commenters submitted views in response to these discussions. In response to the 2005 NPRM, IIHS, PC and Advocates expressed support for NHTSA establishing criteria for safety belt fit for booster seats. Conversely, JPMA believed that belt fit criteria should not be included at this time. In response to the 2010 SNPRM, IIHS and UMTRI stated that NHTSA's repeatability and reproducibility concerns were associated with differences in the dummy jackets and friction issues between the belt and the dummy's chest. They stated that the procedure for measuring belt fit has been improved and the repeatability and reproducibility issues have been addressed.

Agency Response: The agency has not proposed belt fit requirements for the reasons explained in the previous rulemaking documents. We are not proceeding with a belt fit proposal at this time. We will keep an open mind to evaluating the merits of static belt fit criteria in the future. Among other issues, we will consider for future work whether belt fit could or should be measured statically. Data indicate[58] that the HIII–10C submarines like a human child. The dummy appears to have potential as an appropriate device for use in assessing seat belt syndrome in the event that we develop a sufficiently biofidelic abdomen that has a means to measure compression.

3. Shoe Size

This final rule amends S9.1(f) of FMVSS No. 213 to amend the range of shoe sizes specified for the Hybrid III 6-year-old dummy, Hybrid III 6-year-old weighted dummy, and the Hybrid III 10-year-old dummy.

4. Preemption Language

The American Association for Justice (AAJ) comments to the 2008 SNPRM objected to the preamble's discussion of the preemptive effect of the rule. NHTSA's June 14, 2010 final rule on FMVSS No. 305, ''Electric-powered vehicles; electrolyte spillage and electrical shock protection,'' has already responded to AAJ's concerns about this issue. See, 75 FR 33515, at 33524–33525.

V. Rulemaking Analyses and Notices

Executive Order (E.O.) 12866, E.O. 13563 and DOT Regulatory Policies and Procedures

This rulemaking action has considered the impact of this regulatory action under E.O. 12866 and E.O. 13563 and the Department of Transportation's (DOT) regulatory policies and procedures. This rulemaking action was not reviewed by the Office of Management and Budget under E.O. 12866. The rulemaking has also been determined not to be significant under DOT's regulatory policies and procedures (44 FR 11034, February 26, 1979).

This final rule adopts use of a new test dummy in agency tests of child restraints. The benefits cannot be quantified. However, assuring that child restraints can meet the FMVSS No. 213 requirements when tested with a 10-year-old child test dummy should be beneficial. All child restraints tested by the agency with the HIII–10C met the performance requirements of this final rule, so costs will be minimal.

Regulatory Flexibility Act

Pursuant to the Regulatory Flexibility Act (5 U.S.C. 601 et seq., as amended by the Small Business Regulatory Enforcement Fairness Act (SBREFA) of 1996), whenever an agency is required to publish a notice for any proposed or final rule, it must prepare and make available for public comment a regulatory flexibility analysis that describes the effect of the rule on small entities (i.e., small businesses, small organizations, and small governmental

[55] S5.4.3.2 of FMVSS No. 213 limits the force that may be imposed on a child by a belt resulting from the mass of the CRS. While we are not aware of any non belt-positioning CRSs that can apply such loads through the belts due to its mass, this requirement prevents such future designs. Therefore, the agency believes there is a need to retain S5.4.3.2 for non-belt-positioning seats.

[56] NHTSA also stated that, although we believe that belts are better positioned over bony structure of the body than over soft tissue, how much variation from the optimal placement of the belt should be permitted by a performance standard for the fit to be considered ''passing'' is unknown. 70 FR 51727.

[57] Such variability makes challenging the meaningfulness of a belt fit assessment that only uses a standard FMVSS No. 213-style bench seat. Further, even when using the same booster and the same vehicle seat, the belt fitting protocols that we assessed lacked sufficient repeatability and reproducibility for regulatory purposes.

[58] Reed, M., Klinich MA, Ebert-Hamilton, S., Klinich, K., Manary, M., Rupp, J., ''Assessing Child Belt Fit, Volume II: Effects of Restraint Configuration, Booster Seat Designs, Seating Procedure, and Belt Fit on the Dynamic Response of the Hybrid III 10 YO ATD in Sled Tests,'' September 2008, UMTRI–2008–49–2.

jurisdictions). The Small Business Administration's regulations at 13 CFR part 121 define a small business, in part, as a business entity ''which operates primarily within the United States.'' (13 CFR § 121.105(a)). No regulatory flexibility analysis is required if the head of an agency certifies that the rule will not have a significant economic impact on a substantial number of small entities. The SBREFA amended the Regulatory Flexibility Act to require Federal agencies to provide a statement of the factual basis for certifying that a rule will not have a significant economic impact on a substantial number of small entities.

NHTSA has considered the effects of this rulemaking action under the Regulatory Flexibility Act. I hereby certify that this final rule will not have a significant economic impact on a substantial number of small entities.

NHTSA estimates there to be 20 manufacturers of child restraints, eight or ten of which could be small businesses.

The certification responsibilities of manufacturers are generally not affected by this final rule. Manufacturers of child restraints currently must certify their products to the dynamic test of Standard No. 213. They typically provide the basis for those certifications by dynamically testing their products using child test dummies. The effect of this final rule on most child restraints will be to subject them to testing with a new dummy. All child restraints tested by the agency with the HIII–10C met the performance requirements adopted today, so costs will be minimal.

The labels and owner's manual of some child restraints will have to be revised to add a sentence on consumer information. The cost of revising the labels is minimal.

National Environmental Policy Act

NHTSA has analyzed this rulemaking action for the purposes of the National Environmental Policy Act. The agency has determined that implementation of this action would not have any significant impact on the quality of the human environment.

Executive Order 13132 (Federalism)

NHTSA has examined this final rule pursuant to Executive Order 13132 (64 FR 43255, August 10, 1999) and concluded that no additional consultation with States, local governments or their representatives is mandated beyond the rulemaking process. The agency has concluded that the rulemaking would not have sufficient federalism implications to warrant consultation with State and local officials or the preparation of a federalism summary impact statement. The final rule would not have ''substantial direct effects on the States, on the relationship between the national government and the States, or on the distribution of power and responsibilities among the various levels of government.''

NHTSA rules can preempt in two ways. First, the National Traffic and Motor Vehicle Safety Act contains an express preemption provision: When a motor vehicle safety standard is in effect under this chapter, a State or a political subdivision of a State may prescribe or continue in effect a standard applicable to the same aspect of performance of a motor vehicle or motor vehicle equipment only if the standard is identical to the standard prescribed under this chapter. 49 U.S.C. 30103(b)(1). It is this statutory command by Congress that preempts any non-identical State legislative and administrative law addressing the same aspect of performance.

The express preemption provision described above is subject to a savings clause under which ''[c]ompliance with a motor vehicle safety standard prescribed under this chapter does not exempt a person from liability at common law.'' 49 U.S.C. 30103(e). Pursuant to this provision, State common law tort causes of action against motor vehicle manufacturers that might otherwise be preempted by the express preemption provision are generally preserved. However, the Supreme Court has recognized the possibility, in some instances, of implied preemption of such State common law tort causes of action by virtue of NHTSA's rules, even if not expressly preempted. This second way that NHTSA rules can preempt is dependent upon there being an actual conflict between an FMVSS and the higher standard that would effectively be imposed on motor vehicle manufacturers if someone obtained a State common law tort judgment against the manufacturer, notwithstanding the manufacturer's compliance with the NHTSA standard. Because most NHTSA standards established by an FMVSS are minimum standards, a State common law tort cause of action that seeks to impose a higher standard on motor vehicle manufacturers will generally not be preempted. However, if and when such a conflict does exist—for example, when the standard at issue is both a minimum and a maximum standard—the State common law tort cause of action is impliedly preempted. See *Geier* v. *American Honda Motor Co.,* 529 U.S. 861 (2000).

Pursuant to Executive Order 13132 and 12988, NHTSA has considered whether this rule could or should preempt State common law causes of action. The agency's ability to announce its conclusion regarding the preemptive effect of one of its rules reduces the likelihood that preemption will be an issue in any subsequent tort litigation.

To this end, the agency has examined the nature (e.g., the language and structure of the regulatory text) and objectives of this rule and finds that this rule, like many NHTSA rules, prescribes only a minimum safety standard. As such, NHTSA does not intend that this rule preempt state tort law that would effectively impose a higher standard on motor vehicle manufacturers than that established by this rule. Establishment of a higher standard by means of State tort law would not conflict with the minimum standard announced here. Without any conflict, there could not be any implied preemption of a State common law tort cause of action.

Executive Order 12988 (Civil Justice Reform)

With respect to the review of the promulgation of a new regulation, section 3(b) of Executive Order 12988, ''Civil Justice Reform'' (61 FR 4729, February 7, 1996) requires that Executive agencies make every reasonable effort to ensure that the regulation: (1) Clearly specifies the preemptive effect; (2) clearly specifies the effect on existing Federal law or regulation; (3) provides a clear legal standard for affected conduct, while promoting simplification and burden reduction; (4) clearly specifies the retroactive effect, if any; (5) adequately defines key terms; and (6) addresses other important issues affecting clarity and general draftsmanship under any guidelines issued by the Attorney General. This document is consistent with that requirement.

Pursuant to this Order, NHTSA notes as follows. The preemptive effect of this rule is discussed above. NHTSA notes further that there is no requirement that individuals submit a petition for reconsideration or pursue other administrative proceeding before they may file suit in court.

Paperwork Reduction Act

Under the Paperwork Reduction Act of 1995, a person is not required to respond to a collection of information by a Federal agency unless the collection displays a valid OMB control number. Before seeking OMB approval, Federal agencies must provide a 60-day public comment period and otherwise consult with members of the public and

affected agencies concerning each collection of information requirement. NHTSA believes the labeling requirement for the LATCH anchorages will result in a collection of information burden on child restraint system manufacturers. We are providing a 60-day comment period on reporting burdens and other matters associated with the labeling requirements.

Under the Paperwork Reduction Act of 1995, before an agency submits a proposed collection of information to OMB for approval, it must first publish a document in the **Federal Register** providing a 60-day comment period and otherwise consult with members of the public and affected agencies concerning each proposed collection of information. The OMB has promulgated regulations describing what must be included in such a document. Under OMB's regulation (at 5 CFR 1320.8(d)), an agency must ask for public comment on the following:

Whether the proposed collection of information is necessary for the proper performance of the functions of the agency, including whether the information will have practical utility;

The accuracy of the agency's estimate of the burden of the proposed collection of information, including the validity of the methodology and assumptions used;

How to enhance the quality, utility, and clarity of the information to be collected;

How to minimize the burden of the collection of information on those who are to respond, including the use of appropriate automated, electronic, mechanical, or other technological collection techniques or other forms of information technology, e.g. permitting electronic submission of responses.

In compliance with these requirements, NHTSA asks for public comments on the following collection of information:

Title: ''Consolidated Child Restraint System Registration, Labeling and Defect Notifications.'' *OMB Control Number:* 2127–0576.

Requested Expiration Date of Approval: Three years from the approval date.

Type of Request: Label revision of a currently approved collection.

Affected Public: Business, Individuals and Households.

Summary of the Collection of Information: This rulemaking adds a sentence to the printed instructions and labeling of certain child restraint systems (those that have internal harnesses, and that are recommended for older children). Currently, child restraint manufacturers are required to provide printed instructions with step-by-step information on how the restraint is to be used. Without proper use, the effectiveness of these systems is greatly diminished. Each child restraint system must also have a permanent label.[59] A permanently attached label gives ''quicklook'' information on whether the restraint meets the safety requirements, recommended installation and use, and warnings against misuse. The requested revision is to add a sentence to the existing instructions brochure and labeling that will inform the consumer that the lower anchors of a LATCH system may be used up to a combined weight of child and harnessed-child restraint of 65 lb. The purpose of this label is to reduce consumer confusion about using LATCH, and to assure that the lower anchors will be able to withstand the forces generated by the child and CRS in virtually all crashes.

Under this rule, child restraint systems equipped with internal harnesses to restrain the child and with components to attach to a child restraint anchorage system and for which the combined weight of the child restraint system and the maximum recommended child weight for use with internal harnesses exceeds 65 pounds, will be required to be labeled with the following statement: ''Do not use the lower anchors of the child restraint anchorage system (LATCH system) to attach this child restraint when restraining a child weighing more than __*__ [*where * is the recommended weight value in English and metric units such that the sum of the recommended weight value and the weight of the child restraint system does not exceed 65 pounds (29.5 kg)*] with the internal harnesses of the child restraint.''

NHTSA anticipates a change to the hour burden or costs associated with the revised child restraint labels and written instructions. Child restraint manufacturers produce, on average, a total of approximately 4,500,000 child restraints per year. The label would apply to approximately 50 percent of the total annual production (2,250,000 units). The hour burden associated with the revised label consist of the child restraint manufacturer: (1) Determining the maximum allowable child weight when using the lower LATCH anchor attachments as a means of installation by subtracting the weight of the child restraint from 65 pounds and (2) adding this information on an existing label and instruction manual. We estimate 2 seconds of additional burden per child restraint for the determination of the maximum allowable weight and the addition of the information on the existing label and instruction manual (2 sec × 2,250,000 units = 4,500,000 seconds = 1,250 hours).

Estimated Additional Annual Burden: 1,250 Hours

Comments are invited on: Whether the proposed collection of information is necessary for the proper performance of the functions of the Department, including whether the information will have practical utility; the accuracy of the Department's estimate of the burden of the proposed information collection; ways to enhance the quality, utility and clarity of the information to be collected; and ways to minimize the burden of the collection of information on respondents, including the use of automated collection techniques or other forms of information technology.

You may submit comments (identified by the DOT Docket ID Number above) by any of the following methods: Federal eRulemaking Portal: Go to *http://www.regulations.gov.* Follow the online instructions for submitting comments. Mail: Docket Management Facility: U.S. Department of Transportation, 1200 New Jersey Avenue SE., West Building Ground Floor, Room W12–140, Washington, DC 20590–0001. Hand Delivery or Courier: West Building Ground Floor, Room W12–140, 1200 New Jersey Avenue SE., Washington, DC, 20590–0001 between 9 a.m. and 5 p.m. ET, Monday through Friday, except Federal holidays. Fax: 202–493–2251. Regardless of how you submit your comments, you should mention the docket number of this document. You may call the Docket at (202) 366–9324.

Note that all comments received will be posted without change to *http://www.regulations.gov,* including any personal information provided. Anyone is able to search the electronic form of all comments received into any of our dockets by the name of the individual submitting the comment (or signing the comment, if submitted on behalf of an association, business, labor union, etc.). You may review DOT's complete Privacy Act Statement in the **Federal Register** published on April 11, 2000 (65 FR 19477–78).

National Technology Transfer and Advancement Act

Section 12(d) of the National Technology Transfer and Advancement Act of 1995 (NTTAA), Public Law 104–113, section 12(d) (15 U.S.C. 272)

[59] FMVSS No. 213 also requires child restraint manufacturers to provide owner-registration cards and to keep records relating to owner registration information, so that owners can be notified about noncompliance or defect recall campaigns. These owner registration requirements are not affected by this rulemaking.

directs NHTSA to use voluntary consensus standards in its regulatory activities unless doing so would be inconsistent with applicable law or otherwise impractical. Voluntary consensus standards are technical standards (e.g., materials specifications, test methods, sampling procedures, and business practices) that are developed or adopted by voluntary consensus standards bodies, such as the Society of Automotive Engineers (SAE). The NTTAA directs the agency to provide Congress, through the OMB, explanations when we decide not to use available and applicable voluntary consensus standards.

After carefully reviewing the available information, NHTSA has determined that there are no voluntary consensus standards relevant to this rulemaking, except this rule incorporates by reference an American Society for Testing and Materials standard for testing foam materials.

Unfunded Mandates Reform Act

Section 202 of the Unfunded Mandates Reform Act of 1995 (UMRA) requires Federal agencies to prepare a written assessment of the costs, benefits, and other effects of proposed or final rules that include a Federal mandate likely to result in the expenditure by State, local or tribal governments, in the aggregate, or by the private sector, of more than $100 million in any one year (adjusted for inflation with base year of 1995). This final rule would not result in the expenditure by State, local, or tribal governments, in the aggregate, or by the private sector of more than $100 million annually.

Executive Order 13045

Executive Order 13045 (62 FR 19885, April 23, 1997) applies to any rule that: (1) is determined to be ''economically significant'' as defined under E.O. 12866, and (2) concerns an environmental, health, or safety risk that NHTSA has reason to believe may have a disproportionate effect on children. This rulemaking is not subject to the Executive Order because it is not economically significant as defined in E.O. 12866.

Executive Order 13211

Executive Order 13211 (66 FR 28355, May 18, 2001) applies to any rulemaking that: (1) is determined to be economically significant as defined under E.O. 12866, and is likely to have a significantly adverse effect on the supply of, distribution of, or use of energy; or (2) that is designated by the Administrator of the Office of Information and Regulatory Affairs as a significant energy action. This rulemaking is not subject to E.O. 13211.

Plain Language

The Plain Language Writing Act of 2010 (Pub. L. 111–274) and Executive Order 12866 require each agency to write all rules in plain language. Application of the principles of plain language includes consideration of the following questions:

—Have we organized the material to suit the public's needs?

—Are the requirements in the rule clearly stated?

—Does the rule contain technical language or jargon that is not clear?

—Would a different format (grouping and order of sections, use of headings, paragraphing) make the rule easier to understand?

—Would more (but shorter) sections be better?

—Could we improve clarity by adding tables, lists, or diagrams?

—What else could we do to make this rulemaking easier to understand?

If you have any responses to these questions, please send them to NHTSA at the **ADDRESSES** section in the heading of this final rule.

Regulation Identifier Number (RIN)

The Department of Transportation assigns a regulation identifier number (RIN) to each regulatory action listed in the Unified Agenda of Federal Regulations. The Regulatory Information Service Center publishes the Unified Agenda in April and October of each year. You may use the RIN contained in the heading at the beginning of this document to find this action in the Unified Agenda. This rulemaking originally had the RIN 2127–AJ44. This final rule has a new RIN because a September 9, 2011 final rule on one of the issues of the rulemaking was considered to have completed action on RIN 2127–AJ44.

Privacy Act

Anyone is able to search the electronic form of all material received into any of our dockets, including petitions for reconsideration of this rule (a copy of which will be placed in the docket), by the name of the individual submitting the comment (or signing the comment, if submitted on behalf of an association, business, labor union, etc.). You may review DOT's complete Privacy Act Statement in the **Federal Register** published on April 11, 2000 (65 FR 19477 at 19478).

List of Subjects in 49 CFR Part 571

Incorporation by reference, Labeling, Motor vehicle safety, Reporting and recordkeeping requirements, Tires.

In consideration of the foregoing, NHTSA amends 49 CFR part 571 as follows:

PART 571—FEDERAL MOTOR VEHICLE SAFETY STANDARDS

■ 1. The authority for part 571 continues to read as follows:

Authority: 49 U.S.C. 322, 30111, 30115, 30117 and 30166; delegation of authority at 49 CFR 1.50.

■ 2. Section 571.5 is amended by redesignating paragraphs (d)(16) through (d)(37) as paragraphs (d)(17) through (d)(38) and adding new paragraph (d)(16), to read as follows:

§ 571.5 Matter incorporated by reference.

* * * * *

(d) * * *

(16) ASTM D1056–07, ''Standard Specification for Flexible Cellular Materials—Sponge or Expanded Rubber,'' approved March 1, 2007, into § 571.213.

* * * * *

■ 3. Section 571.213 is amended by:

■ a. Revising the definition of ''child restraint system'' in S4;

■ b. Adding S5(e) and (f);

■ c. Revising the introductory text of S5.2.1.2;

■ d. Removing and reserving S5.2.3;

■ e. Revising the introductory text of S5.4.3.2;

■ f. Revising S5.5.2(g)(1)(ii);

■ g. Adding S5.6.1.12;

■ h. Revising S6.1.1(d), S6.1.2(a)(1)(ii), S6.1.2(d)(2)(i) and (ii), and S6.2.3;

■ i. Removing and reserving S6.3 and S7.1.1;

■ j. Revising S7.1.2(d) and (e) and adding S7.1.2(f);

■ k. Removing and reserving S9.1(b);

■ l. Revising S9.1(f), S9.3.1, S9.3.2, and the introductory text of S10.2.1;

■ m. Removing and reserving S10.2.1(a) and (b)(1);

■ n. Revising the first sentence of S10.2.1(b)(2), the introductory text of S10.2.1(c)(1)(i), and the introductory text of S10.2.2;

■ o. Adding S10.2.3; and,

■ p. Adding Figures 13, 14a, and 14b.

The revisions and additions read as follows:

§ 571.213 Child restraint systems.

* * * * *

S4. *Definitions.*

* * * * *

Child restraint system means any device, except Type I or Type II seat

belts, designed for use in a motor vehicle or aircraft to restrain, seat, or position children who weigh 36 kilograms (kg) (80 lb) or less.

* * * * *

S5 * * *

(e) Each child restraint system tested with a part 572 subpart T dummy need not meet S5.1.2.1(a).

(f) Each child restraint system that is equipped with an internal harness to restrain the child need not meet this standard when attached to the lower anchors of the child restraint anchorage system, when tested with a test dummy of a weight that results in the combined weight of the child restraint system and the test dummy to exceed 65 pounds. Such a child restraint must meet this standard when tested using its internal harnesses to restrain such a test dummy while attached to the standard seat assembly using the belt system.

* * * * *

S5.2.1.2 The applicability of the requirements of S5.2.1.1 to a front-facing child restraint, and the conformance of any child restraint other than a car bed to those requirements, is determined using the largest of the test dummies specified in S7 for use in testing that restraint, provided that the 6-year-old dummy described in subpart I or subpart N of part 572 of this title and the 10-year-old dummy described in subpart T of part 572 of this title, are not used to determine the applicability of or compliance with S5.2.1.1. A front facing child restraint system is not required to comply with S5.2.1.1 if the target point on either side of the dummy's head is below a horizontal plane tangent to the top of—* * *

* * * * *

S5.4.3.2 *Direct restraint.* Except for belt-positioning seats, each belt that is part of a child restraint system and that is designed to restrain a child using the system and to attach the system to the vehicle, and each Type I and lap portion of a Type II vehicle belt that is used to attach the system to the vehicle shall, when tested in accordance with S6.1, impose no loads on the child that result from the mass of the system, or—

* * * * *

S5.5.2 * * *

(g)(1) * * *

(ii) ''Secure this child restraint with the vehicle's child restraint anchorage system, if available, or with a vehicle belt.'' [For car beds, harnesses, and belt-positioning seats, the first part of the statement regarding attachment by the child restraint anchorage system (LATCH system) is optional. For belt-positioning seats, the second part of the statement regarding attachment by the vehicle belt does not apply.] Child restraint systems equipped with internal harnesses to restrain the child and with components to attach to a child restraint anchorage system and for which the combined weight of the child restraint system and the maximum recommended child weight for use with internal harnesses exceeds 65 pounds, must be labeled with the following statement: ''Do not use the lower anchors of the child restraint anchorage system (LATCH system) to attach this child restraint when restraining a child weighing more than ____*____ [*insert a recommended weight value in English and metric units such that the sum of the recommended weight value and the weight of the child restraint system does not exceed 65 pounds (29.5 kg)] with the internal harnesses of the child restraint.''

* * * * *

S5.6.1.12 The instructions for child restraint systems equipped with an internal harness to restrain the child and with components to attach to a child restraint anchorage system, and for which the combined weight of the child restraint system and the maximum recommended child weight for use with internal harnesses exceeds 65 pounds, must include the following statement: ''Do not use the lower anchors of the child restraint anchorage system (LATCH system) to attach this child restraint when restraining a child weighing more than ____*____ [*insert a recommended weight value in English and metric units such that the sum of the recommended weight value and the weight of the child restraint system does not exceed 65 pounds (29.5 kg)] with the internal harnesses of the child restraint.''

S6.1.1 *Test conditions.*

* * * * *

(d)(1) When using the test dummy specified in 49 CFR part 572, subparts I and K, performance tests under S6.1 are conducted at any ambient temperature from 19 °C to 26 °C and at any relative humidity from 10 percent to 70 percent.

(2) When using the test dummies specified in 49 CFR part 572, subparts N, P, R or T, performance tests under S6.1 are conducted at any ambient temperature from 20.6 °C to 22.2 °C and at any relative humidity from 10 percent to 70 percent.

* * * * *

S6.1.2 * * *

(a) * * *

(1) * * *

(ii) *Belt-positioning seats.* A belt-positioning seat is attached to either outboard seating position of the standard seat assembly in accordance with the manufacturer's instructions provided with the system pursuant to S5.6.1 using only the standard vehicle lap and shoulder belt and no tether (or any other supplemental device). Place the belt-positioning seat on the standard seat assembly such that the center plane of the belt-positioning seat is parallel and aligned to the center plane of the outboard seating positions on the standard seat assembly and the base of the belt-positioning seat is flat on the standard seat assembly cushion. Move the belt-positioning seat rearward on the standard seat assembly until some part of the belt-positioning seat touches the standard seat assembly back. Keep the belt-positioning seat and the seating position center plane aligned as much as possible. Apply 133 N (30 pounds) of force to the front of the belt-positioning seat rearward into the standard seat assembly and release.

* * * * *

(d) * * *

(2) * * *

(i) The lap portion of Type II belt systems used to restrain the dummy is tightened to a tension of not less than 9 N (2 pounds) and not more than 18 N (4 pounds).

(ii) The shoulder portion of Type II belt systems used to restrain the dummy is tightened to a tension of not less than 9 N (2 pounds) and not more than 18 N (4 pounds).

* * * * *

S6.2.3 Pull the sling tied to the dummy restrained in the child restraint system and apply the following force: 50 N for a system tested with a newborn dummy (49 CFR part 572, subpart K); 90 N for a system tested with a 12-month-old dummy (49 CFR part 572, subpart R); 200 N for a system tested with a 3-year-old dummy (49 CFR part 572, subpart P); 270 N for a system tested with a 6-year-old dummy (49 CFR part 572, subpart N or I); 350 N for a system tested with a weighted 6-year-old dummy (49 CFR part 572, subpart S); or 437 N for a system tested with a 10-year-old dummy (49 CFR part 572, subpart T). The force is applied in the manner illustrated in Figure 4 and as follows:

(a) *Add-on Child Restraints.* For an add-on child restraint other than a car bed, apply the specified force by pulling the sling horizontally and parallel to the SORL of the standard seat assembly. For a car bed, apply the force by pulling the sling vertically.

(b) *Built-in Child Restraints.* For a built-in child restraint other than a car bed, apply the force by pulling the sling parallel to the longitudinal centerline of the specific vehicle shell or the specific

vehicle. In the case of a car bed, apply the force by pulling the sling vertically.

* * * * *

S7.1.2 * * *

* * * * *

(d) A child restraint that is recommended by its manufacturer in accordance with S5.5 for use either by children in a specified mass range that includes any children having a mass greater than 18 kg (40 lb) but not greater than 22.7 (50 lb), or by children in a specified height range that includes any children whose height is greater than 1100 mm but not greater than 1250 mm is tested with a 49 CFR part 572, subpart N dummy (Hybrid III 6-year-old dummy).

(e) A child restraint that is recommended by its manufacturer in accordance with S5.5 for use either by children in a specified mass range that includes any children having a mass greater than 22.7 kg (50 lb) but not greater than 30 kg (65 lb) or by children in a specified height range that includes any children whose height is greater than 1100 mm but not greater than 1250 mm is tested with a 49 CFR part 572, subpart N dummy (Hybrid III 6-year-old dummy) and with a part 572, subpart S dummy (Hybrid III 6-year-old weighted dummy).

(f) A child restraint that is recommended by its manufacturer in accordance with S5.5 for use either by children in a specified mass range that includes any children having a mass greater than 30 kg (65 lb) or by children in a specified height range that includes any children whose height is greater than 1250 mm is tested with a 49 CFR part 572, subpart T dummy (Hybrid III 10-year-old dummy).

* * * * *

S9.1 Type of clothing.

* * * * *

(f) *Hybrid III 6-year-old dummy (49 CFR Part 572, Subpart N) and Hybrid III 6-year-old weighted dummy (49 CFR Part 572, Subpart S), and Hybrid III 10-year-old dummy (49 CFR part 572, subpart T).* When used in testing under this standard, the dummies specified in 49 CFR part 572, Subparts N and S, are clothed as specified in Subpart N and with child or youth size 13 M sneakers weighing not more than 0.45 kg each. When used in testing under this standard, the dummy specified in 49 CFR part 572, Subpart T, is clothed as specified in Subpart T and with youth size 3 sneakers weighing not more than 0.6 kg each.

* * * * *

S9.3.1 When using the test dummies conforming to part 572 C, I, or K, prepare the dummies as specified in this paragraph. Before being used in testing under this standard, dummies must be conditioned at any ambient temperature from 19 °C to 25.5 °C and at any relative humidity from 10 percent to 70 percent, for at least 4 hours.

S9.3.2 When using the test dummies conforming to part 572 subparts N, P, R, S or T, prepare the dummies as specified in this paragraph. Before being used in testing under this standard, dummies must be conditioned at any ambient temperature from 20.6° to 22.2°C and at any relative humidity from 10 percent to 70 percent, for at least 4 hours.

* * * * *

S10.2.1 *Newborn dummy and 12-month-old dummy.* Position the test dummy according to the instructions for child positioning that the manufacturer provided with the system under S5.6.1 or S5.6.2, while conforming to the following:

(b) * * *

(2) When testing rear-facing child restraint systems, place the newborn, or 12-month-old dummy in the child restraint system so that the back of the dummy torso contacts the back support surface of the system. * * *

* * * * *

(c)(1)(i) When testing forward-facing child restraint systems, extend the arms of the 12-month old test dummy as far as possible in the upward vertical direction. Extend the legs of the 12-month-old test dummy as far as possible in the forward horizontal direction, with the dummy feet perpendicular to the centerline of the lower legs. Using a flat square surface with an area of 2,580 square mm, apply a force of 178 N, perpendicular to:

* * * * *

S10.2.2 *Other dummies generally.* When using: (1) the Hybrid III 3-year-old (part 572, subpart P), Hybrid II 6-year-old (part 572, subpart I), and Hybrid III weighted 6-year-old (part 572, subpart S) in child restraint systems including belt-positioning seats; (2) the Hybrid III 6-year-old (part 572, subpart N) and the Hybrid III 10-year-old (part 572, subpart T) in child restraint systems other than belt-positioning seats, position the dummy in accordance with S5.6.1 or S5.6.2, while conforming to the following:

* * * * *

S10.2.3 *Hybrid III 6-year-old in belt-positioning seats and Hybrid III 10-year-old in belt-positioning seats.* When using the Hybrid III 6-year-old (part 572, subpart N) or the Hybrid III 10-year-old (part 572, subpart T) in belt-positioning seats, position the dummy in accordance with S5.6.1 or S5.6.2, while conforming to the following:

(a) *Prepare the dummy.* (1) When using the Hybrid III 10-year-old dummy, prepare the dummy according to the following:

(i) Set the dummy's neck angle at the SP–16 setting (''SP'' means standard procedure), see Figure 14a.

(ii) Set the dummy's lumbar angle at the SP–12 setting, see Figure 14b. This is done by aligning the notch on the lumbar adjustment bracket with the SP–12 notch on the lumbar attachment.

(iii) Adjust the limb joints to 1–2 g while the torso is in the seated position.

(iv) Apply double-sided tape to the surface of a lap shield, which is a piece of translucent silicone rubber 3 mm ±0.5 mm thick (50A durometer) cut to the dimensions specified in Figure 13. Place the lap shield on the pelvis of the dummy. Align the top of the lap shield with the superior anterior edge of the pelvis skin. Attach the lap shield to the dummy.

(v) Apply double-sided tape to one side of a pelvis positioning pad, which is a 125 × 95 × 20 mm (+/ − 2 mm tolerance in each of the three dimensions) piece of closed cell (Type 2 according to ASTM D–1056–07) (incorporated by reference; see § 571.5) foam or rubber cut from material having the following specifications: compression resistance between 9 to 17 psi in a compression-deflection test specified in ASTM D–1056–07 (incorporated by reference; see § 571.5), and a density of 7 to 12.5 lb/ft^3. Center the long axis of the pad on the posterior of the pelvis with the top edge of the foam aligned with the superior edge of the pelvis skin. Attach the pelvis positioning pad to the dummy.

(vi) Dress and prepare the dummy according to S9.

(2) When using the Hybrid III 6-year-old dummy, prepare the dummy according to the following:

(i) If necessary, adjust the limb joints to 1–2 g while the torso is in the seated position.

(ii) Apply double-sided tape to the surface of a lap shield, which is a piece of translucent silicone rubber 3 mm thick ±0.5 mm thick (50A durometer) cut to the dimensions specified in Figure 13. Place the lap shield on the pelvis of the dummy. Align the top of the lap shield with the superior anterior edge of the pelvis skin. Attach the lap shield to the dummy.

(iii) Dress and prepare the dummy according to S9.

(b) Position the belt-positioning seat according to S6.1.2(a)(1)(ii).

(c) Position the dummy in the belt-positioning seat.

(1) Place the dummy on the seat cushion of the belt-positioning seat such that the plane of the posterior pelvis is parallel to the plane of the seat back of the belt-positioning seat, standard seat assembly or vehicle seat back, but not touching. Pick up and move the dummy rearward, maintaining the parallel planes, until the pelvis positioning pad, if used, or the pelvis or back of the dummy and the back of the belt-positioning seat or the back of the standard seat assembly, are in minimal contact.

(2) Straighten and align the arm segments horizontally, then rotate the arms upward at the shoulder as far as possible without contacting the belt-positioning seat. Straighten and align the legs horizontally and extend the lower legs as far as possible in the forward horizontal direction, with the feet perpendicular to the centerline of the lower legs.

(3) Using a flat square surface with an area of 2580 square millimeters, apply a force of 178 N (40 lb) first against the dummy crotch and then against the dummy thorax on the midsagittal plane of the dummy, perpendicular to:

(i) The plane of the back of the belt-positioning seat, in the case of a belt-positioning seat with a back, or,

(ii) The plane of the back of the standard seat assembly or vehicle seat, in the case of a backless belt-positioning seat or built-in booster.

(4) Rotate the arms of the dummy down so that they are perpendicular to the torso.

(5) Bend the knees until the back of the lower legs are in minimal contact with the belt-positioning seat, standard seat assembly or vehicle seat. Position the legs such that the outer edges of the knees are 180 +/− 10 mm apart for the Hybrid III 6-year-old dummy and 220 +/− 10 mm apart for the Hybrid III 10-year-old dummy. Position the feet such that the soles are perpendicular to the centerline of the lower legs. In the case of a belt-positioning seat with a back, adjust the dummy so that the shoulders are parallel to a line connecting the shoulder belt guides. This can be accomplished by leaning the torso such that the dummy's head and neck are centered on the backrest components of the belt-positioning seat. In case of a backless child restraint, adjust the dummy's torso so that the head is as close to laterally level as possible.

(d) *Apply the belt.* Attach the vehicle belts and tighten them as specified in S6.1.2.

(e) *Dummy final positioning.* (1) Check the leg, feet, thorax and head positions and make any necessary adjustments to achieve the positions described in S10.2.3(c)(5). Position the legs, if necessary, so that the leg placement does not inhibit thorax movement in tests conducted under S6.

(2) Rotate each dummy arm downwards in the plane parallel to the dummy's midsagittal plane until the arm contacts a surface of the child restraint system or the standard seat assembly, in the case of an add-on system, or the specific vehicle shell or specific vehicle, in the case of a built-in system, as appropriate. Position the arms, if necessary, so that the arm placement does not inhibit torso or head movement in tests conducted under S6.

* * * * *

BILLING CODE 4910–59–P

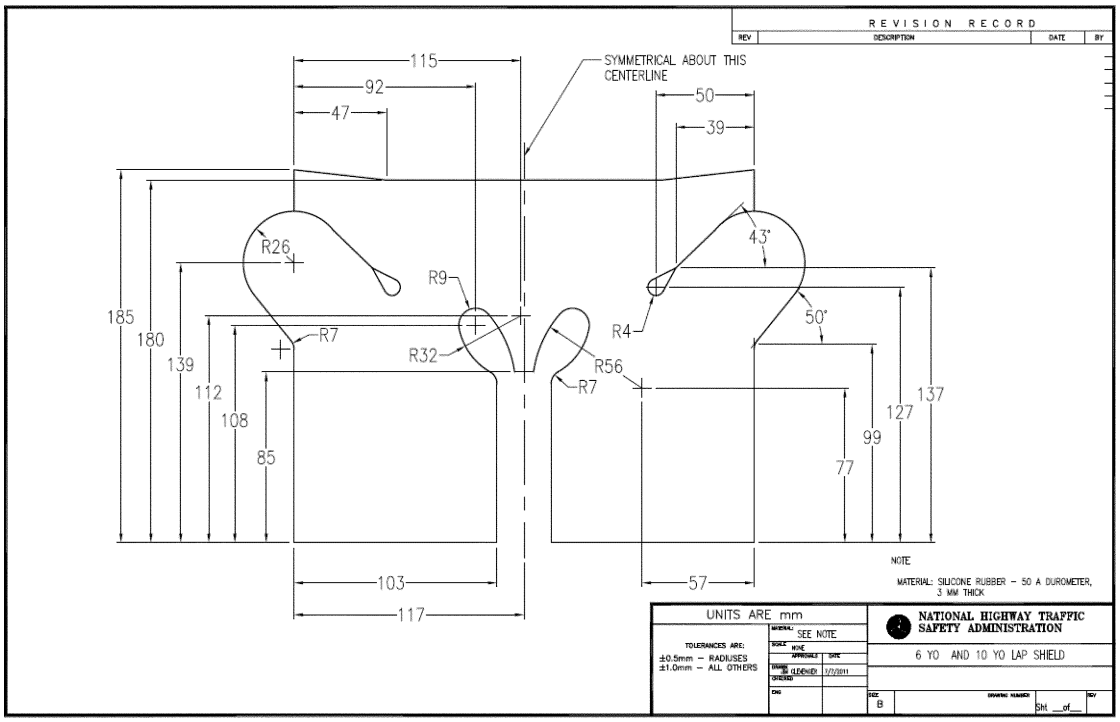

Figure 13 – Lap Shield

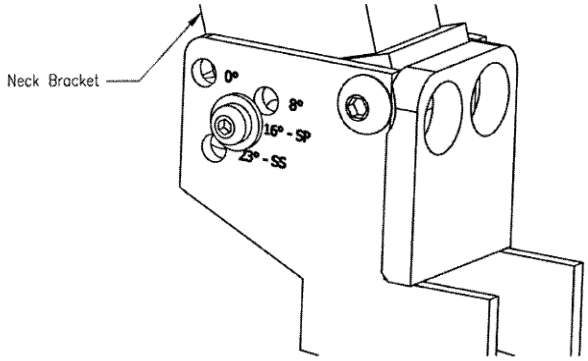

Figure 14a. HIII-10C Dummy Neck Angle Setting is SP-16 Degrees

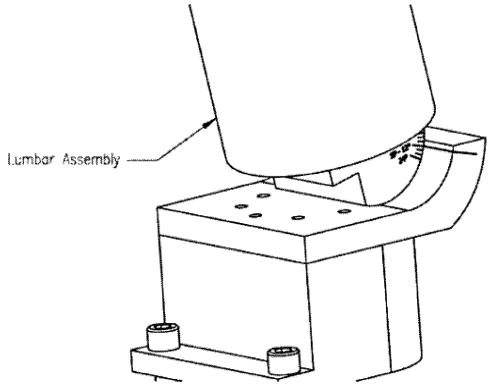

Figure 14b. HIII-10C Dummy Lumbar Angle Setting is SP-12 Degrees

Issued on: February 16, 2012.

David L. Strickland,

Administrator.

[FR Doc. 2012–4134 Filed 2–21–12; 11:15 am]

BILLING CODE 4910–59–C

DEPARTMENT OF TRANSPORTATION

National Highway Traffic Safety Administration

49 CFR Part 572

[Docket No. NHTSA–2011–0175]

RIN 2127–AJ49

Hybrid III 10-Year-Old Child Test Dummy

AGENCY: National Highway Traffic Safety Administration (NHTSA), Department of Transportation (DOT).

ACTION: Final rule.

SUMMARY: This final rule establishes regulations setting forth specifications and qualification requirements for a Hybrid III 10-year-old size child test dummy (HIII–10C). In a companion document published elsewhere in this issue of the **Federal Register**, NHTSA is adopting use of the dummy to test child restraints recommended for children weighing more than 65 pounds (lb) for compliance with the Federal motor vehicle safety standard for child restraint systems. The HIII–10C dummy enables NHTSA to assess the performance of child restraint systems in restraining children in the 8- to 12-year-old age range.

DATES: *Effective date:* April 27, 2012. The incorporation by reference of the publications listed in the rule has been approved by the Director of the Federal Register as of April 27, 2012.

If you wish to petition for reconsideration of this rule, your petition must be received by April 12, 2012.

ADDRESSES: If you wish to petition for reconsideration of this rule, you should refer in your petition to the docket number of this document and submit your petition to: Administrator, National Highway Traffic Safety Administration, 1200 New Jersey Avenue SE., West Building, Washington, DC 20590. For more information, see Section V, Rulemaking Analyses and Notices.

FOR FURTHER INFORMATION CONTACT: For non-legal issues, you may call Peter Martin, NHTSA Office of Crashworthiness Standards (telephone 202–366–5668) (fax 202–493–2990). For legal issues, you may call Deirdre Fujita, NHTSA Office of Chief Counsel (telephone 202–366–2992) (fax 202–366–3820). The mailing address for these officials is the National Highway Traffic Safety Administration, 1200 New Jersey Avenue SE., Washington, DC 20590.

SUPPLEMENTARY INFORMATION: *Petitions for reconsideration of this rule:* The petition will be placed in the docket. Anyone is able to search the electronic form of all documents received into any of our dockets by the name of the individual submitting the comment (or signing the comment, if submitted on behalf of an association, business, labor

union, etc.). You may review DOT's complete Privacy Act Statement in the **Federal Register** published on April 11, 2000 (Volume 65, Number 70; Pages 19477–78).

Table of Contents

I. Executive Summary
II. Background
a. 2005 NPRM
b. Developments Since 2005
c. Summary of Decision
III. Summary of Comments
IV. Response to Comments
a. Functionality of the HIII–10C as a Part 572 ATD
1. Chin-to-Chest Contact
2. Shock Emanating From Shoulder and Neck
i. Shoulder Revision
ii. Lower Neck Revision
3. Stiffness of Vinyl Insert
4. Dummy Availability
b. Durability of the HIII–10C
1. Proximal Femur
2. Bib Assembly
3. Shoulder Rotation Stop Screws
4. Agency Part Replacement Records
i. Pelvis Helicoil Insert
ii. Neck and Ribcage Replacement
iii. Other Replacements
5. Durability Summary
c. Qualification Procedures and Requirements
1. Response Corridors
i. Head
ii. Neck
iii. Thorax
iv. Torso Flexion
v. Knee Impact
2. Summary of Qualification Requirements
3. Impact Probes
4. Instrumentation
i. Rotary Potentiometers
ii. Sternum Displacement
d. Technical Data Package
1. Changes to the Engineering Drawings and PADI
2. Organization of Materials
i. Searchable Text
ii. Order of Engineering Drawings
iii. Part Quantity Specification
iv. Part Numbering Scheme
3. Specifications for Soft Parts
4. Use of 3D Computer Renderings
e. Other
1. Labeling the Dummy as a ''Ten Year Old''
2. Best Practices for Belt Routing
3. Abdominal Injury Correlates
4. Repeatability in Systems Testing
f. Dummy Development Efforts
1. Hybrid III Child Dummy Revisions—Abdomen and Pelvis
2. Pediatric Research
3. Status of HIC
V. Rulemaking Analyses and Notices

I. Executive Summary

The agency has determined that the HIII–10C dummy, configured as described in this document, is a suitable and useful test device for quantitative assessment of child restraint systems (CRSs) and other safety devices for older children. The dummy, with a weight of 35.2 kilograms (kg) (77.6 pounds (lb)) and sitting height of 71 centimeters (28 inches), is ideally suited to test the upper load and height limits of safety restraints for children.

The dummy is specified by this rule by a technical data package (TDP) consisting of a set of engineering drawings, a parts list, and a set of procedures for assembly, disassembly, and inspection (PADI) of the dummy. Additionally, this rule amends 49 CFR part 572 to specify qualification requirements for the dummy, to assure that the HIII–10C responses are within established performance corridors, and further ensure the uniformity of dummy assembly, structural integrity, consistency of response and adequacy of instrumentation. The TDP and qualification requirements assure that HIII–10C dummies are uniform in their design, construction and kinematics.

The drawings and the PADI for the HIII–10C are available for examination in the docket for this final rule. Technical reports and other materials pertaining to this final rule have also been placed in the docket for this final rule.

The notice of proposed rulemaking (NPRM) on which this final rule is based was published July 13, 2005 (70 FR 40281).

The agency is concurrently publishing in this issue of the **Federal Register** a final rule to amend Federal Motor Vehicle Safety Standard (FMVSS) No. 213, ''Child restraint systems'' (49 CFR 571.213), to adopt use of the HIII–10C dummy in agency compliance tests of CRSs. (RIN 2127–AL10, formerly RIN 2127–AJ44.)

The final rules bring to a close NHTSA's work on Public Law 107–318, 116 Stat. 2772 (''Anton's Law''), which contained provisions for NHTSA to develop and evaluate a test dummy that represents a 10-year-old child for use in testing CRSs. Public Law 107–318 required us to initiate rulemaking on the Anthropomorphic Test Device (ATD), a mandate we satisfied in 2005 when we published an NPRM to adopt the HIII–10C into FMVSS No. 213.[1]

When we published the 2005 proposal to include the dummy in FMVSS No. 213, we proposed that booster seats must conform to several new requirements based on HIII–10C measurements, including a head injury criterion (HIC). As part of our assessment, we demonstrated in our pre-proposal testing that, while most CRSs conformed to the new requirements, there were some failures, including those where HIC was exceeded. However, during extensive post-NPRM booster seat testing, inconsistencies in the test protocol revealed variability in the kinematics and measurements of the HIII–10C. In particular, the agency discovered that a slight perturbation in the test protocol could create a large change in HIC. The variability in HIC measurements is attributable to a design feature unique to the HIII–10C in which chin-to-chest contact during the impact event can be excessively hard, but not easily controlled through CRS design.

Subsequently, the agency devoted substantial rulemaking and research efforts to try to address test variability. The August 31, 2005 (FMVSS No. 213) NPRM was followed by a supplemental NPRM (SNPRM) published in 2008[2] and an SNPRM published in 2010.[3] Throughout the rulemaking proceeding, NHTSA informed the public of its research findings, concerns and ideas about using the HIII–10C in FMVSS No. 213, and in turn learned from comments from research organizations, consumer groups, CRS, vehicle, and ATD manufacturers, and others. Considerable effort was devoted to revising the test protocol to eliminate variability in HIC.

The endeavor has led to a new dummy positioning procedure that improves test repeatability with no substantial change to the HIII–10C. The agency has determined that the HIII–10C is an important ATD that will enhance our ability to assess the performance of CRSs and other occupant protection systems in protecting children.[4] In the accompanying FMVSS No. 213 final rule published today, we adopt the HIII–10C into FMVSS No. 213, but due to the recurrence of hard chin-to-chest

[1] 70 FR 51720 (August 31, 2005). Among other matters, Public Law 107–318 directed NHTSA to evaluate an anthropomorphic test device (ATD) that simulates a 10-year-old child for use in testing CRSs and to initiate a rulemaking proceeding for the adoption of the ATD. NHTSA addressed other provisions of Public Law 107–318 in earlier agency actions. These actions are discussed in the preamble of the August 31, 2005 NPRM.

[2] 73 FR 3901 (January 23, 2008). This SNPRM proposed a seating procedure for the HIII–10C to minimize the chin-to-chest impacts. Commenters were generally unsupportive of the procedure.

[3] 75 FR 71648 (November 24, 2010). This second SNPRM proposed an alternative seating procedure for the ATD.

[4] The HIII–10C represents children of a size heretofore not represented by the ATDs used in NHTSA regulations. The child ATDs in 49 CFR part 572 that NHTSA uses for testing CRSs are ATDs representing a newborn infant, a 12-month-old, a 3-year-old, a 6-year-old, and a weighted 6-year-old. In 49 CFR part 572, there is also specified a 5th percentile adult female ATD, which is approximately the size of a 12-year-old.

contacts, we will not adopt HIC as an FMVSS No. 213 injury criterion.

The agency has thus decided that the HIII–10C is a suitable device for use in FMVSS No. 213. The HIII–10C test dummy will provide an enhanced assessment of child restraint performance, and is worthy of adoption into 49 CFR part 572 as implemented by this final rule.

II. Background

a. 2005 NPRM

In July 2005, NHTSA issued an NPRM proposing specifications and certification requirements for a new test dummy representative of a 10-year-old child (70 FR 40281, July 13, 2005). The dummy was proposed to be included among the descriptions of anthropomorphic test devices in 49 CFR part 572, so that it could be called out for use in FMVSS test procedures and other regulations. Concurrently, NHTSA proposed to use the new dummy to assess CRSs recommended for older children under FMVSS No. 213 (70 FR 51720, August 31, 2005). These two NPRMs are referred to herein as the Part 572 NPRM and the FMVSS No. 213 NPRM, respectively.

b. Developments Since 2005

Additional rulemaking notices. Since the two NPRMs were published in 2005, the agency issued two supplemental NPRMs that dealt with the unrealistic ''chin-to-chest'' condition that occurred when the HIII–10C was used in the FMVSS No. 213 sled test environment. This condition was first observed in agency tests that led up to the 2005 NPRMs. In several of the tests, as the HIII–10C's head flung forward, the neck flexed to the point where the dummy's chin came into hard contact with its upper thorax. This chin-to-chest contact at times produced elevated head accelerations. However, in the testing that led up to the 2005 NPRMs, we did not foresee a problem with the chin-to-chest contact because the majority of booster seats tested met the FMVSS No. 213 head injury criterion (HIC) limit of 1000.[5]

Commenters to both NPRMs of 2005 also observed hard chin-to-chest contact in their own tests. Some commenters (Dorel Juvenile Group (Dorel), Graco Children's Products (Graco)) expressed concerns the chin-to-chest contact was an indication of poor spine biofidelity and urged NHTSA to undertake additional testing of the HIII–10C to ensure that the test dummy is appropriate for use in FMVSS No. 213 testing.

[5] 70 FR at 51724.

Following these comments, NHTSA conducted further testing of the HIII–10C to investigate the chin-to-chest contact. We concurred with the commenters that the hard chin-to-chest contact exhibited by the HIII–10C in sled tests was an undesirable occurrence. The hard contact was unrealistic, as real-world accident data indicated that children do not sustain head injuries in that manner. The chin-to-chest contact is much less prevalent in the kinematics of actual children because the child's spine is more flexible than that of the ATD. The added flexibility of a child's spine allows greater forward translation and rotation of the head. When chin-to-chest contact occurs in children, it does not produce as hard of a contact as the dummy and does not result in severe injuries. Moreover, we found that HIC values produced by the HIII–10C were highly variable when chin-to-chest contact occurs, as the dummy was not designed to achieve repeatable or reproducible responses under this condition.

In consideration of the likelihood of unreasonably high HIC values, the agency issued the 2008 SNPRM that mitigated chin-to-chest contact by specifying a posture that was about 10 degrees more upright than the HIII–10C positioned in a CRS under the original NPRM (73 FR 3901). However, this proposal was widely criticized in comments to the SNPRM. Some commenters believed that the upright positioning procedure was unrealistic because it did not reflect the way children actually sit in booster seats. Some also indicated that a belt routing system or harness designed for an upright ATD may introduce unwanted belt slack when applied to a fully reclined child. They believed this could add to head excursion and preclude a CRS from performing its primary function of properly positioning a vehicle's seat belt to a child occupant. Additionally, some commenters found the procedure to be cumbersome and difficult to follow.

Following a test program conducted in response to these comments, on November 24, 2010 the agency issued a second SNPRM for positioning the HIII–10C (75 FR 71648). The 2010 SNPRM replaced the proposal for the upright positioning procedure with a procedure developed by the University of Michigan Transportation Research Institute (UMTRI). The UMTRI procedure emphasizes fitting the dummy to the CRS rather than achieving a specific dummy posture. In trial tests run by the agency using the UMTRI procedure, we found the repeatability of all test measurements to be greatly improved relative to those observed under the seating procedures we had proposed previously. Because the UMTRI procedure typically results in an ATD posture similar to that associated with the seating procedure used in the original NPRM of 2005, chin-to-chest contact continued to occur. Thus, we proposed using the UMTRI procedure when positioning the HIII–10C in FMVSS No. 213 tests, but proposed that HIC would not be used as a performance criterion in FMVSS No. 213 when using the HIII–10C.

Supplemental testing. Since the NPRMs of 2005, the agency has used the HIII–10C in about two hundred sled tests to support the FMVSS No. 213 SNPRMs, to address the comments to the Part 572 NPRM, and to arrive at the final configuration of the dummy. We have acquired four additional HIII–10C units to add to our repeatability and reproducibility assessment. In this period since 2005, we have made a comprehensive assessment of the ATD to examine the many issues brought up in comments received on the four rulemaking proposals.

The test results permitted us to examine and evaluate the consistency of the data and adequacy of the dummy in a broad range of CRSs available in the market. Of the approximately 80 models of booster seats manufactured since 2006,[6] twenty seats from eight different manufacturers have been tested with the HIII–10C since the Part 572 NPRM. Another fourteen seat models manufactured prior to 2006 have also been tested. This spectrum represents a good cross-section of the booster seat market and demonstrates well the utility of the HIII–10C under all installations.

Utility of the HIII–10C. Our supplementary testing has reaffirmed that the HIII–10C is a meaningful ATD for use in FMVSS No. 213 and merits incorporation into 49 CFR part 572 even without NHTSA's use of HIC as an FMVSS No. 213 pass/fail criterion. Additional qualification data obtained since 2005 has confirmed the high level of repeatability and reproducibility that was demonstrated in the NPRM on a limited data set.[7] As reported in this

[6] To assist consumers in deciding which CRS to purchase, NHTSA provides ease of use ratings for child seats. We attempt to select and rate all seats on the market. Currently, we provide about 80 ratings of seats designed for children weighing 36.3 kg (80 lb) or more and manufactured since 2006. There are 23 different manufacturers represented in our selection of seats.

[7] Except to the extent discussed in this document regarding chin-to-chest contact, NHTSA confirms the NPRM's discussion of the findings that the HIII–10C is a biofidelic ATD that produces repeatable and reproducible results. A detailed discussion of

Continued

preamble, the qualification corridors indicate outstanding dummy repeatability and reproducibility. Throughout the entire test experience, the HIII–10C has proven to be a durable test instrument.

The additional data also confirms the qualification of HIII–10C-based injury metrics. Other than HIC, all other dummy-based measurements used in FMVSS No. 213—head excursion, knee excursion, and chest acceleration—have proven to be sound metrics appropriate for CRS testing. A NHTSA-sponsored study published in 2008 found the head excursion of the HIII–10C to be very similar to a human subject in matched pair tests.[8] Also, the agency has observed a strong correlation between knee excursion and submarining in child dummies. As such, knee excursion correlates indirectly with abdominal injuries. The limit on knee excursion prevents CRS manufacturers from controlling head excursion by designing their restraints so that children submarine in a crash.

The limit on chest acceleration ensures that a CRS provides a child with sufficient ''ride down'' or absorption of crash forces over a period of time in a manner that avoids injury. The revisions to the HIII–10C described in this preamble assure that the chest acceleration measurements are devoid of any signal irregularities. The HIII–10C will also be used in FMVSS No. 213 to assess the structural integrity of CRSs for older children.

Recent agency studies have also demonstrated that the HIII–10C has sufficient biofidelity to be used in possible belt fit programs. Our research has found lap and shoulder belts to fit the HIII–10C much like they do a human.[9] The dummy was found to sit in a seat like a human child and don the belt like a human child.

The agency has also recently completed studies on the HIII–10C's utility and biofidelity in assessing submarining and abdominal injury.[10] In summary, we have found the HIII–10C to be sufficiently biofidelic to mimic the kinematics of a belted human child. The dummy was found to be sensitive to a range of lap belt and torso belt anchorage configurations and its propensity to submarine was consistent with that of a belted child. Given these positive results, the agency is pursuing the development of an HIII–10C modification consisting of an abdominal insert that measures abdominal deformation, thus providing a direct assessment of injury risk.

c. Summary of Decision

The data available since 2005 support a decision that the HIII–10C is a suitable device for use in FMVSS No. 213. Adopting the HIII–10C in 49 CFR part 572 enables NHTSA to expand the applicability of FMVSS No. 213 to CRSs that are recommended for children over the current 35.2 kg (65 lb) weight limit in a meaningful way. There has been considerable interest over the years in expanding the applicability of FMVSS No. 213 to increase the likelihood that child restraints for older children (e.g., booster seats) will perform adequately in a crash. This interest goes hand-in-hand with efforts to prolong CRS use among children who have outgrown their child safety seat, but who cannot adequately fit a vehicle's lap and shoulder belt system. Adopting the HIII–10C into 49 CFR part 572 enhances NHTSA's ability to reduce unreasonable risks of traffic crashes to older children.

III. Summary of Comments

We received comments on the Part 572 NPRM from: The American Academy of Pediatrics (AAP), Children's Hospital of Philadelphia (CHOP), Advocates for Highway and Auto Safety (Advocates), Dorel, Chrysler, the Alliance of Automobile Manufacturers [11] (Alliance), and a joint submission from ATD manufacturers First Technology Safety Systems (FTSS) and Denton ATD (Denton) (FTSS/Denton).[12] Some of the comments on the FMVSS No. 213 SNPRMs raised issues pertaining to the Part 572 rulemaking, which we discuss in this document as appropriate. Additional organizations commenting on the FMVSS No. 213 rulemaking include Graco, the Juvenile Product Manufacturers Association (JPMA), and Consumers Union.

Commenters were very supportive of the idea of incorporating an ATD representing children in the 8- to 12-year-old age range. There was general support for the HIII–10C's incorporation into Part 572, but as indicated above, concerns were raised about the chin-to-chest contact. Dorel expressed opposition to the adoption of the HIII–10C, citing concerns about the ATD's biofidelity, durability, and compatibility with the FMVSS No. 213 test environment. Some comments suggested adjustments and clarifications to the Part 572 proposed regulatory text, to improve the procedures for qualifying an ATD and the performance assessments.

The following major categories of issues were raised: (a) Functionality of the HIII–10C as a Part 572 ATD; (b) durability of the ATD; (c) qualification procedures and requirements; (d) the TDP (the engineering drawings and PADI); (e) other issues (clarifying agency statements in the preamble); and (f) dummy development efforts. Each of these areas is discussed below.

IV. Response to Comments

a. Functionality of the HIII–10C as a Part 572 ATD

1. Chin-to-Chest Contact

As described earlier in this preamble, the agency received many comments regarding the undesirable chin-to-chest contact exhibited by the HIII–10C, which is related to the biofidelity of the HIII–10C's spine. Dorel, the Alliance and others reported chin-to-chest contact during normal use of the dummy, which was believed to be brought on by an overly stiff thoracic spine relative to human children.

We agree that the hard chin-to-chest contact in FMVSS No. 213 sled tests is an undesirable characteristic of the HIII–10C. Chin-to-chest contact has also been observed in tests run by the agency. In most cases, the time interval producing the highest calculation of HIC enveloped the instant when chin-to-chest contact occurred, including cases where head acceleration was very high. In other words, chin-to-chest contact often caused HIC to exceed the injury assessment reference value (HIC_{36} = 1000).

The design of the neck-to-thorax joint in the HIII–10C differs from other dummies in the Hybrid III family. In the other dummies, the neck is off-set or

the HIII–10C's biofidelity can be found in the NPRM, see 70 FR at 40284. The repeatability and reproducibility of the HII–10C is discussed in the NPRM at 70 FR at 40285. Commenters did not disagree with these aspects of the dummy, except as discussed in this document regarding the chin-to-chest contact.

[8] Ash, JH, Sherwood, CP, Abdelilah, Y, Crandall, JR, Parent, DP, Kallieris, D., ''Comparison of Anthropomorphic Test Dummies with a Pediatric Cadaver Restrained by a Three-point Belt in Frontal Sled Tests,'' Proceedings of the 21st International Technical Conference on the Enhanced Safety of Vehicles, June 2009.

[9] Reed, M., Ebert-Hamilton, S., Klinich, K., Manary, M., Rupp, J., ''Assessing Child Belt Fit, Volume I: Effects of Vehicle Seat and Belt Geometry on Belt Fit,'' UMTRI Report No. UMTRI–2008–49–1, University of Michigan, Ann Arbor, MI, September 2008.

[10] Reed, M., Ebert-Hamilton, S., Klinich, K., Manary, M., Rupp, J., ''Assessing Child Belt Fit, Volume II: Effect of Restraint Configuration, Booster Seat Designs, Seating Procedure, and Belt Fit on the Dynamic Response of the Hybrid III 10-year-old ATD in Sled Tests,'' UMTRI Report No. UMTRI–2008–49–2, University of Michigan, Ann Arbor, MI, September 2008.

[11] At the date of the October 3, 2005 comment, the Alliance consisted of: BMW Group, DaimlerChrysler; Ford Motor Company; General Motors; Mazda; Mitsubishi Motors; Porsche; Toyota; and Volkswagen.

[12] In 2010, FTSS and Denton announced that they have merged into one company, Humanetics, Inc.

cantilevered anterior to the thorax, which is not optimal anthropometrically. In the HIII–10C, the upper part of the thorax spine structure has been designed such that the neck-to-thorax joint is an in-line connection following more closely the anthropometry of a human. The lower neck bracket described earlier serves at the neck-to-thorax joint.

The downside to the improved anthropometry is that it creates a ''hard spot'' during chin-to-chest contact. The stiff lower neck bracket is where the chin comes into contact with the chest and where only a thin layer of soft flesh material offers any buffer. Beyond a few millimeters of flesh material compression, chin-to-chest contact forces—and head accelerations—increase exponentially. As a result, a small deviation in head motion causes a very large change in head acceleration and HIC. The change is difficult to control and may be in conflict with good CRS design. In some cases, HIC scores have been shown to improve when the torso belt fit is degraded.[13] Since chin contact to the thorax is not a natural brain injury path in actual children, any such attempt to lessen HIC through booster seat design may compromise the overall safety performance of the seat.

Due to the non-biofidelic chin-to-chest contact, we have decided not to require CRSs to meet the HIC criterion when tested with the HIII–10C in the compliance of FMVSS No. 213, as announced in the FMVSS No. 213 final rule published today. When we followed the UMTRI seating procedure adopted in the final rule for FMVSS No. 213, we found that the seating procedure reduces HIC variability in repeat tests of the same booster seat, including those in which hard chin-to-chest contact occurs. However, hard chin-to-chest contact was still observed in many agency tests. Mitigating this effect altogether, as recommended in comments by Dorel, would require a major redesign of the entire thorax and spine, which is not feasible. Instead, the agency is concentrating efforts on developing an entirely new pediatric dummy for future use, as discussed later in this preamble.

Nonetheless, we did make minor changes to the HIII–10C to mitigate some of the effects of the chin-to-chest contact in accordance with a recent agency study.[14] This Part 572 final rule specifies the thickness of the HIII–10C's chin flesh in the inferior-superior direction. The new specification is aimed at lessening the variability of head accelerations among different dummies when chin-to-chest contact does occur.

The chin flesh specification improves the functionality of the HIII–10C as an ATD, even though we have decided not to use HIC as an FMVSS No. 213 pass/fail criterion when using the dummy. HIC may continue to be measured in FMVSS No. 213 tests with the HIII–10C for research purposes, and could be used as a performance metric in other NHTSA programs (e.g., out-of-position (OOP) air bag tests, New Car Assessment Programs). Standardizing the thickness of the chin will improve the repeatability of the HIC measurements from different dummies when chin-to-chest contact occurs. Hard chin-to-chest contact may be a concern to researchers investigating the whipping actions of the head. The chin specification will better enable them to compare HIC measurements in tests with different dummies.[15]

2. Shock Emanating From Shoulder and Neck

Chrysler[16] and Graco were concerned that spikes or ''noise'' is present in the signal traces of accelerometers and load cells in the head and upper torso of the HIII–10C. In evaluating these comments, we determined that the presence of these spikes has no consequence on the use of the HIII–10C as a regulatory tool as specified in the final rule for FMVSS No. 213. The only instruments within the HIII–10C that will be used in FMVSS No. 213 are accelerometers arranged triaxially at the center of gravity (CG) of the chest. In all agency tests in which these spikes appeared in the accelerometer signals, they were removed by the signal processing algorithms used to compute the chest acceleration criterion.[17]

The routines used to compute chest G's include a standard SAE International (SAE) Channel Frequency Class (CFC) 180 filter and a 3 millisecond (ms) clip.[18] The 3 ms clip originated in 1970 for use in FMVSS No. 208, ''Occupant crash protection,'' in recognition that such spikes are insignificant as injury contributors (35 FR 14941). The spikes in the data of the HIII–10C were caused by two sources other than by chin-to-chest contact: part-to-part contact between components of the shoulder assembly, and a loose fitting neck cable that interfered with the lower neck load cell. Spikes emanating from the shoulder and neck of the HIII–10C were not always completely removed by CFC180 filtering of the chest acceleration signals, but once they were ''clipped'' by the 3 ms algorithm, they had no measureable effect on the computation of chest G's. Moreover, in most cases the time interval containing the peak acceleration identified by the algorithm did not contain the spike, which usually occurred later in the event. Thus, the injury reference measures for the HIII–10C's immediate use in FMVSS No. 213 (chest acceleration, head and knee excursion) are not affected by this condition.

The shock emanating from the shoulder and neck is benign in terms of its effect on the dummy itself (the acceleration spikes are no greater than 150 G's). It does not affect the kinematics of the dummy in any way (i.e., the head trajectory and knee excursion are unaffected). The magnitude of the spikes is well within the typical operating range of +/− 2000 G's for the specified accelerometers, so shock damage to the instruments is unlikely.

Nonetheless, although the shocks do not influence the outcomes of FMVSS No. 213 tests, we made the following simple modifications to the HIII–10C's shoulder and neck to lessen the shock effect. Improving the ATD in this manner assures that the dummy is better suited for possible future uses in tests where computations for head injury assessments based on head accelerometer signals are more sensitive to the condition (e.g., OOP air bag tests).[19]

i. Shoulder Revision

The TDP of this final rule modifies the shoulder design of the HIII–10C.

Similar to a human, the shoulder of the HIII–10C provides the load bearing surface for the shoulder belt. On the dummy, the part that provides this surface is a one-piece aluminum casting that is connected to the spine via a yoke that extends laterally from the spine. The yoke-to-shoulder connection is a

[13] 2008 UMTRI Vol. 2 Report

[14] Stammen, J., Bolte, J., Shaw, J., ''Biomechanical Impact Response of the Human Chin and Manubrium,'' Annals of Biomedical Engineering (2011, in press).

[15] Because we are measuring HIC for research purposes, this final rule adopts the proposed qualification test for the HIII–10C head measurements.

[16] Docket No. NHTSA–2005–21247–0016.

[17] The chest acceleration criterion specified in FMVSS No. 213 is 60 G's.

[18] The 3 ms clip truncates the peak acceleration portion of a continuous signal having a duration less than 3 milliseconds.

[19] The computation of HIC applies a higher signal filter class (CFC 1000 vs. CFC 180) and does not impose a 3 ms clip. The revisions do not affect the assessment of CRSs with regard to FMVSS No. 213, so this change will not delay the incorporation of the HIII–10C into Part 572.

pivot which provides medial-lateral movement (i.e., pivoting about the z-axis) in a direction that is dependent upon the position of the shoulder belt. If the belt lies close to the neck, the shoulder will pivot inward; if it is on the edge of the shoulder it will pivot outward. The piece of the shoulder casting that contains the pivot hole has a finger-like protrusion. As the shoulder pivots, the finger acts as a cam by compressing a rubber pad that is glued within the yoke. This provides resistance to the z-axis pivoting.

Compared to Hybrid III adult dummies, the shoulder design of the HIII–10C is anthropometrically improved. For the adult dummies, the shoulder is an assembly of two halves that are joined medially-laterally. The mid-joint provides the z-axis pivoting for each half. By eliminating the mid-joint, the HIII–10C is able to provide a more biofidelic interaction with the shoulder belt during a dynamic event. Because it is made from one part instead of two, the HIII–10C shoulder was able to be designed with a sloped, uniform shoulder belt bearing surface.

The improved design of the HIII–10C is made possible by the new configuration of the upper thorax in which the offset of the neck has been eliminated. The HIII–10C shoulder design allows more realistic movement of the belt along the shoulder during a dynamic event. Furthermore, since the surface that bears the load of the shoulder belt is a one-piece casting, the designers of the dummy were able to build in a shoulder load cell. Although it is not currently used for regulatory purposes, the load cell is very useful in research and development activities to study belt load distributions across the torso.

Notwithstanding its simpler design, the new shoulder has had problems over the years. In early versions of the design (pre-NPRM), the shoulder had a tendency to over-pivot to the point where the finger protrusion was bottoming out the rubber pad. In the 2001–2002 timeframe, the shoulder went through two design revisions in an attempt to rectify the situation by relocating the shoulder pivot hole and trimming the yoke.

As indicated by the Graco and Chrysler comments, the Part 572 NPRM version of the shoulder could still be improved. Before the finger bottoms out the pad, metal-to-metal contact occurs between the yoke and the shoulder in one or more places. Shock from this contact appears as short-duration spikes of up to 150 G's in the signals of accelerometers closest to the shoulder. Spikes of a lesser extent also appear in neck load cell signals. Chrysler ran sled tests to identify the shoulder-yoke contact points by means of transfer paint, and reported these results to the agency.[20]

To address the spikes, as reflected in the TDP for this final rule, we have revised the shoulder and yoke assembly to lessen the effect of the two parts bottoming out against each other. More clearance has been created for the shoulder to move by reconfiguring the shoulder casting and the yoke assembly by making them both narrower. This modification does not affect the biofidelity of the ATD or the reproducibility or repeatability of the responses because the neck response and sled kinematics were not affected by the shoulder revisions.

Complete details of the modifications are described in an agency technical report that may be found in the docket for this final rule.[21]

ii. Lower Neck Revision

This final rule makes simple modifications to the HIII–10C's lower neck load cell and fasteners associated with the neck safety cable to lessen the shock effect.

The safety cable of the HIII–10C neck is common to all ATDs in Part 572. It is a steel wire rope that runs through the center of the molded neck to prevent total separation of the head from the torso under an extreme test condition. The rope is fitted with swages at both ends: a ball-end at the superior end and a threaded stud-end at the inferior end. The ball-end is larger than the diameter of the neck's through-hole to prevent it from passing through the neck. On the inferior end, a nut is used to tighten the threaded swage, which places the cable under tension and the molded neck under compression. A secondary jam nut serves as a lock. According to the NPRM and final rule specifications, the nut should be tightening to a torque setting of 8 +/− 2 inch-pounds (in-lbs) before each test.

The entire neck assembly is joined to the spine by means of a specialized bracket that allows the neck to be set at different forward tilt angles. A through-hole runs through the center of this bracket allowing access to the end fitting of the wire rope so that it may be tightened without removing the bracket from the neck. In lieu of the bracket, an optional part is available for the HIII–10C containing a lower neck load cell. It has the same general configuration as the un-instrumented bracket, except the through hole has a smaller bore.

Shock emanating from the neck has been observed when either the bracket or an optional part containing a lower neck load cell is used. (The load cell is not needed in tests carried out under FMVSS No. 213.) When the neck goes into extreme flexion (a 90 degree bend is specified in the qualification test), the center cable is not sufficiently taut to prevent its movement within the center channel of the neck. As a result, the steel washer and nuts on the threaded swage move within the free space provided by the center hole and can come into contact with the inner walls of the through-hole. To mitigate this condition, the washer has been changed from steel to nylon. Also, the lower neck load cell and its structural replacement have been revised since the Part 572 NPRM. For each of these two parts, a sleeve made of soft, dampening material is now used to line the through-hole and prevent rattling of the nuts. The load cell revision also carries over the capacities specified in the NPRM which were increased for some channels where data was truncated in pre-NPRM agency tests using a previous load cell.[22]

In a related problem, a premature wear problem has been observed in the agency's HIII–10C units and reported in comments provided by Dorel. The molded neck itself has two polymeric bushings, one at each end of the neck, through which the cable passes. The bushings prevent the steel rope from abrading the internal through-hole of the neck. However, the aforementioned cable movement tends to abrade the neck channel and chafe the lower polymeric cable bushing.

To avoid problems such as those noted by Dorel, the polymeric bushing should be inspected on a periodic basis. The bushing is an inexpensive part that may be readily inspected and replaced during the course of running the neck qualification tests. We note that setting the neck cable to the proper torque is key to the longevity of the bushing. The torque setting is also critical to passing the qualification requirement for the neck. In addition, we also found that the torque setting of the neck cable nut significantly affects the head excursion and the upper neck moment within the sagittal plane (about the y-axis).

We also found that, when left unchecked, the threaded stud-end could wear through the plastic collar and chafe the outer aluminum disc of the

[20] Id.

[21] "Revisions to the HIII–10C Technical Data Package," NHTSA, August 2011.

[22] The revised load cell is a six-axis load cell. Maximum load capacities and several other load cell specifications are given on Drawing SA572–40 in the TDP.

molded neck after extended use. When the neck goes into extreme flexion, a chafed bushing can partially work its way out of the center through hole of the molded neck. This allows the wire rope to rub directly against the aluminum end plate of the neck, sending shock through the entire spine, which appears as noise in the signals of nearby sensors.

As described earlier, the signal noise emanating from the neck has no consequence on the use of the HIII–10C in FMVSS No. 213 because the noise is removed by signal processing algorithms. Nonetheless, the agency has implemented simple revisions to mitigate any shock emanating from the shoulder and lower neck. In addition to revising the lower neck load cell to preclude rattling, we have taken steps to lessen the effects of the chafing. A new bushing has been specified in the TDP with an increase to the flange thickness and with a smaller inner diameter, which reduces the clearance of the wire rope. The inner diameter of the cable washer has also been decreased to prevent it from sliding. Details of the new load cell, bushing, and washer, along with their effects, are reported in NHTSA's technical report, ''Revisions to the HIII–10C Technical Data Package,'' August 2011.

3. Stiffness of Vinyl Insert

Dorel indicated in its comments that it was having difficulty meeting the torso flexion test because the vinyl abdominal inserts it used were too stiff or too soft. Dorel had to mix and match inserts and lumbar flex joints in an attempt to pass the test. The commenter was concerned that the manufacturing variability for the inserts is too wide.

The agency has revised the specification of the abdominal insert by adding new dimensional requirements that improve manufacturing consistency and fit. The agency has also revised the PADI to include a section on how to position the abdominal insert within the pelvis cavity when running the torso flexion test. The specified setting of the insert governs its interaction with the chest jacket, lumbar spine, and ribcage, all of which influences the outcome of the torso flexion test. In agency tests, the new insert setting provided sufficient instruction to successfully carry out the torso flexion tests without having to mix or match inserts.

4. Dummy Availability

In its 2005 comments, Dorel claimed that no dummies were available on the market prior to the NPRMs of 2005 that satisfied the proposed Part 572 specifications. It listed nine changes to its version of the dummy relative to the version specified by the Part 572 NPRM of 2005. Thus, Dorel claimed that it was not given adequate opportunity to evaluate the proposed dummy.

We see no merit to delaying the final rule to either FMVSS No. 213 or Part 572 on the basis of HIII–10C availability. Several years have passed since the NPRMs were published in 2005, during which two additional NPRMs have been published on the use of the HIII–10C in FMVSS No. 213. This has provided commenters with ample time and opportunity to acquire, test, and submit comments to the docket about the HIII–10C. We note that in Dorel's comments to the SNPRM of 2008, it did not discuss any specifics on the HIII–10C other than those already provided in 2005 and addressed herein.

b. Durability of the HIII–10C

In its comments, Dorel reported on observed durability problems and breakage of the HIII–10C in its sled tests. No other commenters noted any problems related to these observations or any other damage.

As described earlier in this preamble, the agency has expanded our dataset of HIII–10C sled tests by about 200 tests and many more qualification tests since the NPRMs were published in 2005. In the whole of this extensive test regimen, the agency has studied many aspects of the dummy's performance including its functionality and durability. We have not observed any significant functionality or durability problems that would preclude the use of the HIII–10C use in FMVSS No. 213 or any other standardized test.

Each problem raised by Dorel is discussed below. Also included is a discussion of our own part replacement records assembled during the course of our post-NPRM evaluation of the dummy. No further changes to the dummy have been implemented as a result of these observations.

1. Proximal Femur

Dorel reported a broken casting in one of its HIII–10C units representing the proximal femur. Although Dorel did not describe how the failure occurred, we assume it was brought on by the ''flailing legs'' seen in FMVSS No. 213 tests. During the impact event, the lap belt retains the pelvis, while the legs spring forward placing a tensile load on the joint connecting the legs to the pelvis.

We had observed this type of failure in testing of an earlier, pre-NPRM version of the dummy. Since then, the dummy part representing the proximal femur was redesigned to eliminate the fracture problem. The part is now made of 4140 steel rather than C954 aluminum bronze, and a sharp corner stress riser has been rounded. In the photographs provided by Dorel, it appears that its failed unit had the older aluminum bronze casting. The new design was incorporated into the Part 572 NPRM version of the dummy and is specified in the version described in this final rule.

The femur has held up in all agency tests since the change was implemented to the pre-NPRM version. No further change to the dummy is necessary.

2. Bib Assembly

Dorel provided a picture of a torn bib assembly, without further discussion, in its response to the Part 572 NPRM. The extent of the testing to produce this damage was not described.

The agency has not encountered any instances of torn bib assemblies in our extensive testing experience with the HIII–10C, but we have seen occasional abrasions on some bib assemblies of other Part 572 dummies. They were caused by the shoulder belt pressing against and eventually rubbing through the chest jacket during multiple severe test exposures. This may have been the case for Dorel, based on its general comment that it had performed ''65 dynamic sled tests run at DJG [Dorel Juvenile Group] to the new [FMVSS No.] 213 standard bench and pulse using the HIII–10C dummy,'' in addition to other dynamic sled tests conducted at a contract laboratory. Given that the tear is likely caused by excessive wear-and-tear, the agency has not revised the bib assembly.

3. Shoulder Rotation Stop Screws

The arm of the HIII–10C is connected to the shoulder through a yoke that acts as a two degree of freedom joint which allows the arm to flex, extend, and rotate axially. Affixed to the yoke is a protrusion, or ''shoulder rotation stop,'' that limits the range of motion of the shoulder in axial rotation (i.e., it cannot complete a 360 degree circuit). So, when the arms of the HIII–10C flail forward and extend during a dynamic test, the stops prevent the arms from rotating all the way up and around behind the body.

Dorel provided photos showing that the screws holding the rotation stop in place in its HIII–10C unit had sheared off. Dorel stated that it repaired the part by welding the stop into place, but the commenter provided no further discussion.

The agency has not experienced this type of failure in any of our tests of the HIII–10C, and we do not know the

circumstances that led to the failure in the Dorel unit. In the absence of information that a problem exists or that it is recurring, we find no need to change the HIII–10C with regard to the shoulder stop.

4. Agency Part Replacement Records

Since the NPRMs of 2005, NHTSA has continued to monitor the durability of the HIII–10C, as we do routinely with all of our ATDs. A summary of our records is provided below. In general, a part within a dummy is replaced for one of two reasons: Because it was damaged during a test or because it has become worn and unserviceable after extensive use. As described below, our experience indicates that all part replacements were made under the latter circumstance. The records thus show good durability of the HIII–10C.

i. Pelvis Helicoil Insert

Throughout our post-NPRM testing experience of about 200 sled tests, the agency observed only one instance of a part failure that appeared to have affected the outcome of the test. This failure was brought on by flailing legs, which caused the femur to separate from the pelvis due to the failure of a helicoil.[23] ''Helicoil'' is the product name of a steel fastener that provides positive thread locking into soft metals like aluminum or bronze.

Three helicoils are inserted into the HIII–10C's aluminum pelvis casting so that the flange that retains the proximal head of the femur may be bolted directly to the casting. After one of our tests, we noticed that the flange had separated from the pelvis. Upon closer inspection, we found that a helicoil had disengaged from the pelvis. This failure has not recurred. Moreover, a helicoil failure is typically gradual as its threads loosen from the base material over time. A thorough pre-test inspection can usually spot helicoil looseness so that repairs may be made, thus mitigating the likelihood of a test failure. Therefore, a revision to the flange fastening system is unnecessary.

ii. Neck and Ribcage Replacement

Like all ATDs in the Hybrid III family of dummies, the deformable parts of the HIII–10C have the shortest service lives. The two most often replaced parts on the HIII–10C are the ribcage and the molded neck. Worn ribs are usually detectable by examining them for overly gouged or delaminated damping material. Unserviceable molded neck assemblies are not noticeable by visual inspection, with the exception of chafed cable bushings as described earlier.

The conditions of the ribs and neck are monitored directly through the Part 572 qualification procedures. In our experiences with the HIII–10C, the decision to remove a rib set or neck from service has always been made during pre-test qualification procedures when the thorax impact or the neck flexion/extension test qualifications cannot be met after a few trials. The typical service life for HIII–10C rib sets and neck assemblies alike are about thirty sled tests. We have not had a situation where failure occurred during a sled test of any kind.

iii. Other Replacements

According to our records, flesh materials—particularly the chest flesh—are the only other parts that have been replaced on a recurring basis. As with flesh materials of all ATDs, those of the HIII–10C are replaced periodically as they become aged, abraded, or torn. Deterioration of these parts is easy to identify so that they may be repaired or replaced well before they deteriorate to the point where their condition may affect test results. They are also relatively inexpensive (chest flesh is the highest priced flesh material item: $650) and easy to service.

5. Durability Summary

Given the record of low maintenance to our own HIII–10C units and the relatively few complaints noted by commenters, we consider the dummy to be highly suitable for use in FMVSS No. 213 in terms of its durability. Our records indicate that there have been relatively few instances of HIII–10C part replacements of any sort. When we have replaced parts, it has always been due to extensive service, not a sudden failure. Replacement of worn parts constitutes preventative maintenance that, when scheduled at regular intervals, will help to ensure valid test results.

c. Qualification Procedures and Requirements

Qualification procedures for the HIII–10C are basically the same as those proposed in the Part 572 NPRM, though some of the response corridors have been modified in consideration of additional qualification test data accumulated by the agency during our post-NPRM test experience. We also considered in our analysis a large qualification test dataset provided by the Alliance, amassed by members of the SAE International (SAE) Dummy Testing Equipment Subcommittee (DTESC). The much larger data set now allows us to base the setting of the corridors on an enhanced statistical analysis, providing even better assurance that the mean and the dispersion of the responses are representative of the dummies that the users will have to work with in the field.

Comments provided by the Alliance and echoed by FTSS/Denton recommended several changes to the performance corridors for the HIII–10C. In most instances, the commenters recommended changes that were specified by the DTESC based on a large dataset of qualification test results provided by participating organizations, including Chrysler, Ford, and General Motors, FTSS/Denton, Delphi, MGA, and TRW. The Alliance also recommended changes to the specification for impact probes and dummy instrumentation. The comments and our response thereto are discussed below.

1. Response Corridors

The corridors suggested by the Alliance are based on a range of 98 to 275 qualification tests per body segment from about 25 dummies. The Part 572 NPRM corridors were based on a range of 6 to 28 qualification tests per component performed on 2 dummies. Post-NPRM data accumulated by the agency contained qualification results from an additional 4 HIII–10C units.

The agency analyzed the data submitted by the Alliance and found that the suggested corridors and the coefficients of variation (CVs) were generally in good agreement with agency data. This good correspondence lent confidence that the data were of sufficient quality to be considered with agency data towards the establishment of performance corridors. The advantage of a larger sample size is that it allows for consideration of such factors as lab-to-lab, operator-to-operator, and dummy-to-dummy variability.

Upon consideration of the larger dataset, we found that our original corridors proposed in the Part 572 NPRM needed only fine-tuning. Summaries of the changes to each body region are given below. Full details of our analyses are contained in the technical report, ''Development of Qualification Performance Specifications for the HIII–10C Crash Test Dummy,'' December 2011, which has been placed in the docket for this final rule.

i. Head

The head qualification test consists of dropping the head onto a rigid surface from a height of 376 millimeters (mm)

[23] This was not the proximal femur casting part reported by Dorel.

(14.8 inch (in.)). Since the HIII–10C head is a Hybrid III 5th percentile adult female (HIII–5F) head, the same test procedure is specified as in 49 CFR part 572, Subpart O, which contains the specification for the HIII–5F ATD. The head drop is designed for the forehead to impact a flat, rigid surface at the midsagittal plane. The head response limit in these impacts is specified between 250 and 300 G's as proposed in the NPRM. No change was necessary to these limits, as the majority of data fit well and is well centered within the corridors.

ii. Neck

The head and neck assembly and the test procedures are the same as proposed in the Part 572 NPRM. The neck is evaluated for flexion and extension kinematics similar to that defined in 49 CFR part 572, Figure 15 and Figure 21. The head-neck assembly is mounted to the bottom of a pendulum that is being decelerated from a speed of 6.1 meter/sec (m/s) (20 feet/sec (ft/s)) for flexion and 5.03 m/s (16.5 ft/s) for extension at velocity reduction rates indicated in Table 1. The only difference between the final rule and the Part 572 NPRM is a corrected reduction in velocity specification at 10 ms for neck extension, changing from 1.59–1.89 ft/s to 1.49–1.89 ft/s. (The metric specification was correct.) The 1.59 ft/s specification reflected a typographical error.

TABLE 1—NECK REDUCTION IN IMPACT VELOCITY FROM INITIAL IMPACT IN FLEXION AND EXTENSION

Body region	Reduction in impact velocity from initial impact			
Neck (flexion)	Final rule		NPRM	
	ft/s	m/s	ft/s	m/s
at 10ms	1.64–2.04	5.38–6.69	1.64–2.04	5.38–6.69
at 20ms	3.04–4.04	9.97–13.25	3.04–4.04	9.97–13.25
at 30ms	4.45–5.65	14.60–18.53	4.45–5.65	14.60–18.53
Neck (Extension)	ft/s	m/s	ft/s	m/s
at 10ms	1.49–1.89	4.89–6.20	1.59–1.89	4.89–6.20
at 20ms	2.88–3.68	9.45–12.07	2.88–3.68	9.45–12.07
at 30ms	4.20–5.20	13.78–17.06	4.20–5.20	13.78–17.06

Neck flexion. The final rule performance corridors for maximum D-plane rotation of the head and moment decay time were revised from those proposed in the Part 572 NPRM. Even though the width of the D-plane rotation corridor remained unchanged, additional agency data and comments by the Alliance supported a statistically justifiable shift of the range upward from 74–88 degrees to 76–90 degrees (the Alliance recommended a 76.5–88.5 degree range). The corridor for moment decay time was adjusted to a slightly narrower range from 85–105 ms to 86–105 ms in the final rule. The combined NHTSA–Alliance data did not justify the selection of a narrower corridor suggested by the Alliance at 91–101 ms. In light of the good fit of the new qualification data within the previously established limits, the peak moment range within the rotation corridor remains unchanged from that proposed in the NPRM at 50–62 ms. The Alliance did not comment on this item.

Neck extension. All three neck extension performance corridors in this qualification test were adjusted slightly from those proposed in the Part 572 NPRM. The adjustments were needed to account for data received from the Alliance and the additional data generated in agency tests. The maximum D-plane rotation corridor was widened and shifted downward from 99–114 degrees proposed in the NPRM to 96–115 degrees for the final rule. The limits suggested by the Alliance were also 96–115 degrees.

Also, based on the additional data, in the final rule the corridor for peak occipital-condyle moment during the maximum rotation interval is revised to (−46)–(−37) Newton-meters (N-m), as compared to (−47)–(−35) N-m proposed in the NPRM, and (−47)–(−36) N-m recommended by the Alliance. The final rule specifies a moment decay time of 100–116 ms, as compared to 100–120 ms proposed in the NPRM, and 100–114 ms recommended by the Alliance.

iii. Thorax

The thorax qualification procedure is the same as that proposed in the Part 572 NPRM. It specifies a 6.0 m/s (19.7 ft/s) frontal impact within the midsagittal plane by a 6.89 kg (15.2 lb) round faced 121 millimeter (mm) (4.76 in) diameter probe into the mid-sternum of a seated dummy. Thorax impact responses are specified as the maximum sternum displacement, the maximum probe force at the time of maximum sternum displacement, the maximum probe force when the sternum displacement is between 20 mm and the lower bound of maximum displacement, and the internal hysteresis percentage between loading and unloading curves.

The NPRM proposed chest deflection limits of 40.5–48.5 mm, while the Alliance recommended 38.5–48.5 mm. Upon consideration of the full dataset, our analysis has led us to set the limits at 37–46 mm for the final rule. This downward shift was necessitated by a stiffer response seen in the most recent data in both NHTSA testing and in results submitted by the Alliance.

In light of the modified maximum chest deflection corridor, the limits of the peak probe force at maximum deflection and the peak probe force in the deflection transition zone (prior to the rib deflection reaching the lower corridor limit) were raised correspondingly. The former was changed from 1.83–2.33 kN in the NPRM to 2.0–2.45 kN in the final rule, while the latter was changed from <2.33kN in the NPRM to <2.52 kN in the final rule. Comparable Alliance recommendations were 1.95–2.45 kN for peak force at maximum deflection and <2.45 kN in the transition zone. Limits for hysteresis proposed in the NPRM were well-supported by the data and remained unchanged at 69–85 percent.

iv. Torso Flexion

The torso flexion test involves the determination of bending resistance of the upright seated dummy's lumbar spine/mid-torso area when the upper torso is quasi-statically flexed from its upright seated posture by 35 degrees relative to a lower torso. The resistance to bending is defined as the highest load

encountered during the bending process.

The final rule specifies a resistance of 180 to 250 N compared to that in the NPRM of 190–240 N. The adjustment was made in response to Alliance comments recommending a range of 178–249 N. The final rule limits are in near agreement with the Alliance recommendation, and are well supported by the combined Alliance-NHTSA data set. The final rule also specifies that upon removal of the flexion force the torso, the torso is required to return to within 8 degrees of its initial position. This is the same requirement that was proposed in the NPRM. Commenters did not recommend a revision to this requirement.

v. Knee Impact

The knee impact test is the same as that proposed in the Part 572 NPRM, consisting of a 2.1 m/s (6.9 ft/s) impact by a 1.91 kg (4.21 lb) flat-faced 76.2 mm (3.0 in.) diameter rigid probe into the knee of a HIII–10C leg assembly (including the tibia and foot), where the distal end of the femur is mounted rigidly to a reaction mass. For the final rule, the corridor for the force applied to the knee by the impactor is specified to be between 2.6 and 3.2 kN, as compared to 2.56 to 3.14 kN in the NPRM. The final rule specification is in agreement with recommendations made by the Alliance.

2. Summary of Qualification Requirements

A summary of performance specifications for the entire dummy, including those proposed in the Part 572 NPRM and those advocated by the Alliance, is provided in Table 2. Based on our analysis, the agency data were found in most instances to be in reasonably good agreement with the corridors suggested by the Alliance corridors. For measurements where our analysis of the data did not justify setting the corridors at Alliance recommendations, we searched for the best justifiable accommodation of both datasets within the limits of the biofidelity data.

As a general rule, performance corridors were set around ± 3 standard deviations from the mean for measurements with a CV<3 percent, at ± 2 standard deviations from the mean for measurements with a CV from 3 to 5 percent, and at ± 10 percent from the mean for measurements with a CV from 5 to 10 percent.

Table 2 indicates that all of the data leading to CVs for the final rule are within the 10 percent limit. Accordingly, all of the dummy based measurements related to their projected use as Injury Assessment Reference Values (IARVs) meet the requirements for inclusion into Part 572.

TABLE 2—FINAL RULE QUALIFICATION CORRIDORS AND COMPARISON WITH NPRM AND ALLIANCE RECOMMENDATIONS

Test	Response measurement or test parameter	Final rule corridor	NPRM corridor	Alliance suggested corridor	Full alliance/NHTSA dataset		
					Mean	S.D.	%CV
Head drop	Acceleration (g)	250–300	250–300	250–300	271	11.6	4.29
Neck pendulum, flexion.	Max D-plane rotation (deg)	76–90	74–88	76.5–88.5	83.05	3.28	3.95
	Peak O–C moment (N-m)	50–62	50–62	n/a	55.38	3.30	5.96
	Moment decay time to 10 N-m (ms)	86–105	85–105	91–101	96.63	3.88	4.01
Neck pendulum, extension.	Max D-Plane rotation (deg)	96–115	99–114	96–115	105.4	4.35	4.12
	Peak O–C moment (N-m)	(−46)–(−37)	(−47)–(−35)	(−47)–(−36)	−41.8	2.37	5.67
	Moment decay to –10 N-m (ms)	100–116	100–120	100–114	107.2	3.17	2.95
Thorax pendulum impact.	Sternum displacement (mm)	37–46	40.5–48.5	38.5–48.5	41.3	2.1	5.04
	Peak probe force defining the displacement corridor (kN).	2.0–2.45	1.83–2.33	1.95–2.45	2.227	0.113	5.06
	Peak probe force during the time when sternum displ. is 20 to 40.5 mm (kN).	<2.52	<2.33	<2.45	2.287	0.154	6.74
	Thorax hysteresis	69–85%	69–85%	69–85%	80.3	2.3	2.91
Torso flexion	Peak force at 35 deg from vertical (N)	180–250	190–240	178–249	213.3	18.7	8.8
	Return angle (degrees)	< 8, > −8	< 8, > −8	.....	5.2	1.7	note 1
Knee impact	Peak force (kN)	2.6–3.2	2.56–3.14	2.60–3.20	2.92	0.157	5.37

(1) The %CV does not apply to this measurement since the nominal requirement of zero degrees renders a %CV of infinite magnitude.

3. Impact Probes

For the dummies specified in Part 572 before 2000, impact probes used in qualification testing were assumed to take the form of a nearly perfect cylinder that could be specified by a material, weight, and diameter. In practice, a perfectly cylindrical probe is rare. Also, the addition of several new child dummies to 49 CFR part 572 called for a new assortment of lighter probes that were even more difficult to design in a pure cylindrical form due to their low weight. This created a situation where testing laboratories maintained a limited assortment of probe bodies, and then attained the proper probe characteristics by interchanging probe faces.

Beginning with our final rule for the Hybrid III 6-year-old child dummy (HIII–6C) in January 2000, the agency began to specify the minimum mass moment of inertia (MOI) and free air resonance for the various probes used in Part 572 qualification testing. This assured that vibratory effects were not present and that various probe configurations did not introduce differences in dummy response due to probe shape variations. At the same time, laboratories retained ample latitude to design impact probes. For the HIII–10C, the Part 572 NPRM specified a minimum mass moment of inertia as well.

In its comment, the Alliance took issue with our proposed specifications. It pointed out that the minimum thorax and knee pendulum mass moments of inertia as proposed in the NPRM at 2,040 kg-cm^2 and 140 kg-cm^2, respectively, were higher than those recommended by the SAE Hybrid III Dummy Family Task Group. In its comments, the Alliance included thorax and knee qualification data collected from multiple test facilities indicating minimal performance differences in qualification tests despite a variety of

test probes with different MOIs. It recommended that we revise our minimum specification to 1,463 kg-cm² for the thorax probe and 117 kg-cm² for the knee probe, as was called out in the original SAE specification of the dummy.

In our analysis of Alliance data, we examined round-robin tests performed on the same knee (or thorax) to isolate the effect of the different probe MOI on the response of that part. By only considering these tests, we eliminated the possibility that dummy reproducibility would confound the response data. Also, we only considered data from the sources where MOIs were known. Though it submitted test data from several laboratories, the Alliance provided probe MOIs from just three sources.

In comparing qualification test data using the Alliance probes with the lowest MOIs against data using our own probes, we found peak force measurements to be consistently lower with the Alliance probes. We note that the Alliance knee probe with the lowest MOI was still above our lower limit (152 kg-cm² vs. 140 kg-cm²), and the Alliance thorax probe with the lowest MOI was only narrowly under our limit (1,960 kg-cm² vs. 2,040 kg-cm²). Given the trend towards lower force response with lower MOIs and that the majority of Alliance probes are already within our MOI specification, the agency will not revise the probe specifications.

4. Instrumentation

i. Rotary Potentiometers

The Alliance pointed out an omission to the filter specification for rotary potentiometers that are typically used in the neck flexion and extension qualification tests. The potentiometers are used to measure the rotation of the head relative to the pendulum. The agency inadvertently overlooked the filter call-out in the Part 572 NPRM. We have revised the specification to include a 60 CFC call-out as was recommended by the Alliance. This call-out is consistent with SAE J211 and that of other Part 572 ATD specifications.

ii. Sternum Displacement

The Alliance pointed out that the CFC 180 filter specification for sternum displacement was not consistent with the SAE Recommended Practice J211, Rev. Mar 95, ''Instrumentation for Impact Tests—Part 1—Electronic Instrumentation,'' (SAE J211). It noted that Hybrid III dummies specified in 49 CFR part 572 subparts N (HIII–6C) and O (HIII–5F) call for the use of a CFC 600 filter for sternum displacement. This was a mistake in the Part 572 NPRM. We have revised the final rule to specify a CFC 600 filter for sternum displacement potentiometer signals.

d. Technical Data Package

The HIII–10C as specified herein is essentially the same as that defined in the Part 572 NPRM. A few minor revisions to the TDP have come about as a result of our experiences during extensive use of multiple HIII–10C dummies in the post-NPRM tests of booster seats. The revisions were corrective in nature; they do not affect the response of the dummy other than to remove unwanted artifacts. These include changes associated with improved functionality to the shoulder, neck cable bushing, and chin as described earlier. In addition, several typographical errors and other mistakes in print were uncovered. Comments associated with the TDP are discussed below.

1. Changes to the Engineering Drawings and PADI

FTSS/Denton requested a number of changes to the engineering drawings and PADI. These requests were echoed by the Alliance. For the most part, we agree with FTSS/Denton's requests and we have revised the TDP accordingly. The revisions are all aimed at manufacturing, machining, assembly, and inspection of dummy parts. They fell into four categories: errors, dimensioning changes, clarifications expressed in notes, and changes associated with the introduction of new part numbers.

Errors consisted of misnumberings, typographical errors, and other mistakes in print.

An example of a dimension change can be seen on the Shoulder Yoke Assembly, drawing 420–3430. For this part, the yoke was widened by 0.003 inches. This minor change provides the proper clearance needed to account for tolerance stack up so that the arm may always be attached to the shoulder without force-fitting.

An example of a clarifying revision is the added set of dimensions placed on sheet 3 of drawing 420–0000, Complete Assembly, HIII–10C. These reference dimensions indicate the location of safety belt plateaus on the dummy's shoulder and pelvis. They are useful when inspecting the dummy in accordance with the instructions provided in the PADI and when conducting the torso flexion qualification test. This additional information does not alter the dummy's design or its construction.

In the TDP proposed in the Part 572 NPRM, many parts were identified with part numbers associated with other ATDs. In the final drawing package we assigned new part numbers to these parts, using the HIII–10C's ''420'' prefix, to identify these as HIII–10C parts. This was strictly a documentation change to better identify HIII–10C parts and did not affect the construction of the dummy in any way. However, it did generate many drawing revisions since many of the newly assigned part numbers are referenced on many HIII–10C drawings.

None of the revisions affect the performance of the HIII–10C in qualification testing or in FMVSS No. 213. Therefore, they are not discussed exhaustively in this document. A full accounting of the revisions can be found in the supplementary technical report cited earlier, ''Revisions to the HIII–10C Technical Data Package,'' NHTSA, August 2011.

2. Organization of Materials

i. Searchable Text

FTSS/Denton and the Alliance recommended that the part numbers be searchable in electronic PDF drawing files. The agency concurs that it would be an improvement for text to be searchable in the electronic PDF drawing files to facilitate use. Accordingly, the agency has converted the drawing files to an electronic format with searchable text capability. A searchable text is now available in the electronic drawing files.

ii. Order of Engineering Drawings

FTSS/Denton and the Alliance recommended that the drawing package be arranged into ascending order by part number. We disagree. We believe that the drawing package should be left in segment order to be able to quickly identify parts belonging to a particular segment cluster. Moreover, the numbering system should be consistent with the PADI to facilitate inspection and service of the dummy. Given that the drawing package is electronically searchable, it will be an easy matter for users to search for drawings and order them in the manner they prefer. Accordingly, the HIII–10C drawing package remains ordered by body segment (as proposed in the Part 572 NPRM).

iii. Part Quantity Specification

The HIII–10C parts list is arranged such that each assembly is listed together with its associated parts. In many instances the same part (such as a fastener) is used on multiple assemblies and is thus listed more than

once on the parts list. The parts list proposed in the Part 572 NPRM only identifies how many times a part is used on the assembly immediately preceding it on the list, not the entire dummy. FTSS/Denton and the Alliance recommend that the parts list should include a column giving the total quantity of that part in the dummy the first time it appears on the list. The agency agrees that such information would be useful for procurement of parts and servicing of the dummy. Accordingly, a column has been added in the parts list showing the total number of times a part appears in the dummy.

iv. Part Numbering Scheme

A number of HIII–10C dummy parts are common with parts of other dummies. For example, the HIII–10C has the same head as the HIII 5th female, but the TDP's for each dummy have their own numbering scheme with different part numbers for the head. FTSS/Denton commented that it believes the same part numbers should be used for identical parts. This comment was echoed by the Alliance.

The agency has not revised our part numbering scheme as recommended by FTSS/Denton. If the same part numbers were used, substantial documentation problems could be encountered. A revision to the design of a shared part may be needed for one dummy, but detrimental to the function of another dummy. A distinct numbering system, by cross-referencing the shared part numbers, poses no such problems.

The main benefits of using identical part numbers are related to part inventory control and sequencing of production processes. For dummy manufacturers like FTSS/Denton, the economics of production may be aided by a numbering scheme that identifies common parts so that batch processing of identical parts could be scheduled readily. However, we believe that interested parties can realize these advantages easily enough by developing their own internal part numbering scheme as they see fit. This may be cross-referenced against the HIII–10C TDP without resorting to a common part numbering scheme for Part 572.

3. Specifications for Soft Parts

The Alliance and FTSS/Denton recommended that the agency and industry work together to define dimensions that are critical to controlling performance of the vinyl, rubber, and other deformable parts and to identify suitable measurement jigs and part tolerances. The Alliance cited the jacket of the 49 CFR part 572 subpart O Hybrid III 5th percentile adult female dummy as an example of unwanted reproducibility variations among dummy manufacturers. FTSS/Denton requested further that the agency work directly with them to set longevity specifications for the useful life of deformable parts. Citing customer dissatisfaction, FTSS/Denton was concerned that vinyl and rubber ATD components typically shrink or change shape over time.

We do not believe it is feasible or practical for NHTSA to undertake the work suggested by the commenters at this time, nor is it necessary for the HIII–10C. The HIII–10C was developed cooperatively under the direction of the SAE Hybrid III Dummy Family Task Force to limit the variability of parts. At the time, FTSS and Denton collaborated jointly on the design. SAE provided the general specifications, and the two manufacturers shared the responsibility of designing the hardware and producing the prototypes. The cooperation assured that variations in reproducibility were avoided.

Even before the companies merged, HIII–10C parts built by FTSS and Denton had a good record of reproducibility and interchangeability, as highlighted in the Part 572 NPRM. Now that the two companies have merged, HIII–10C vinyl and rubber parts can be created from a common set of molds, thus precluding any variability in the form and fit of soft parts. As for longevity, the decision on when to replace worn HIII–10C parts should be based on conformity to part specifications and qualification testing.

4. Use of 3D Computer Renderings

The Part 572 NPRM mentioned that ''three-dimensional engineering aids are available from the NHTSA Web site for complex dummy part dimensions. While these aids are not part of this specification, they can be used by the public for reference purposes.'' These aids take the form of computer-aided design (CAD) files that appear as three-dimensional (3D) renderings of various parts. They were received by NHTSA from the SAE Hybrid III Dummy Family Task Group in 2004 at the time we received the two-dimensional (2D) engineering drawings.[24] The Alliance commented that it believes that the 3D renderings should be formally entered into Part 572 to specify the HIII–10C.

Although we see much merit to 3D renderings, we will not implement the suggestion to enter them into Part 572. We understand that all contemporary ATD designs originate using CAD tools which are valuable assets to designers and researchers. Within NHTSA, CAD files of ATDs have been used in our research activities to construct finite element models to simulate dummies in dynamic events. We have also used them to investigate possible ATD design modifications and to study static interactions with seat belts and vehicle interiors.

However, 3D CAD renderings are not currently used for regulatory purposes in Part 572. As applied within our research activities, a 3D computer rendering is akin to an actual part. But the part alone—without dimensions or any other information—cannot be used to specify itself. Part specifications communicate information on how to fabricate and verify the part. This is done by applying dimensions and tolerances to parts, along with information on material, surface finish, and other features required by the specification-holder. The most objective way to convey this information is to render the part on a standard 2D engineering drawing, showing multiple views of the part when necessary. Drawing standards have long been developed to systematically and unambiguously convey this information, as reflected in Part 572 engineering drawings of ATDs. Thus, the 2D drawings ultimately serve to specify ATD parts.

Neither the Alliance nor FTSS/Denton (the originator of the 3D renderings) has proposed a systematic and unambiguous means by which the 3D renderings may be used to specify ATDs. Until such a means is devised, we will not include them in 49 CFR part 572 to specify the HIII–10C. Our basis for acceptance of the dummy will continue to be conformance to 2D drawings, together with the qualification test requirements in Part 572.

We continue to believe that 3D renderings serve as very helpful engineering aids as described in the NPRM and hold promise in specifying ATD parts. However, in the case of the 3D renderings of the HIII–10C received from the SAE Hybrid III Dummy Family Task Group, the agency will not post the CAD files on our Web site. Upon further review of these renderings, we have found many instances where they do not conform to the 2D specifications shown on drawings. Since we cannot vouch for their accuracy, we decline to post them.

[24] Two sets of 3D renderings were received: one originating from FTSS and the other from Denton before the merger of the two companies into Humanetics.

e. Other

In response to some of the comments, this section clarifies or explains some of the statements in the preamble of the Part 572 NPRM. These clarifications do not affect the regulatory text or TDP specifying the HIII–10C for incorporation into Part 572.

1. Labeling the Dummy as a ''Ten Year Old''

As noted earlier in this preamble, among the ATDs described in 49 CFR part 572, the HIII–10C successfully fills the size gap between the existing HIII–6C and the Hybrid III 5th percentile adult female dummy. The majority of the commenters were supportive of the use of the HIII–10C. However, AAP noted that the height and weight of the HIII–10C do not correspond to an average 10-year-old child as indicated by growth charts published by the Center for Disease Control (CDC). AAP stated that, according to growth charts from 2000, the HIII–10C falls into the 50th–75th percentile in weight, but at 130 centimeters (cm) tall, it is only in the 5th–10th percentile in standing height. AAP believed that these proportions do not represent any average human child and may better represent a nine-year-old child than a ten-year-old. This comment was echoed by Advocates. Although neither organization objected to the use of the dummy in the FMVSS, both apparently believe that the discrepancy in the proportions of the HIII–10C may confuse or mislead the general public on the applicability of booster seats. Thus, both organizations believe the agency should explain how we defined ''ten-year-old'' as it relates to human children and the description of the HIII–10C.

Agency response. The target design for the HIII–10C dummy was an ATD that was suitable for assessing CRSs rated for children weighing about 36.3 kg (80 lb). At 35.4 kg (78 lb), the HIII–10C fulfills this objective. As such, the design intent of the dummy was not to conform rigorously to the anthropometry of a child of a particular age, weight, or height percentile. Furthermore, the sitting height—not the standing height—is of primary importance when evaluating booster seats because the overlay of the seat belt system onto the dummy is depended on its seated posture. As pointed out by AAP, the sitting height of the HIII–10C falls into the same growth chart range for sitting height as it does for weight.

Nevertheless, the agency believes that the proportions of the HIII–10C are more consistent with an average 10-year-old than indicated by AAP's comments. Characteristic dimensions and segment weights of the HIII–10C are based on the anthropometry of the average 10-year-old as identified by Mertz et al.,[25] to which the dummy is shown to match closely.

Moreover, we note that our declared standing height of 130 cm is only an approximation, not a direct measurement. The HIII–10C has no one-to-one correspondence with the heights shown on CDC growth charts. The CDC reference for standing height is one that is taken when subjects are maximally erect. Like all full ATDs in Part 572, the HIII–10C is a sitting dummy. Since it cannot be placed in a standing position, its ''standing height'' cannot be measured directly. Instead, it is approximated by summing the lengths of its body segments. However, since the dummy is constructed to represent a reclined and supported seated posture, not an erect posture, the summed lengths underestimate the CDC standing height. This means that if an actual child with sitting dimensions equal to those of the HIII–10C stood in a maximally erect posture, his/her height would probably be greater than 130 cm.

2. Best Practices for Belt Routing

In citing a 2005 paper by Tylko and Dalmotas,[26] the Alliance observed that the chest deflection of the HIII–10C in the booster seat was higher than it was when it was used without the booster seat. In the non-booster test, the belt was routed close to the neck where that the dummy's central sternal potentiometer was not sensitive to high belt loading. (This insensitivity is common to all ATDs in the Hybrid III family of dummies.) The Alliance has asked the agency to raise awareness of this issue so that the positive effects of booster seats are not mistakenly maligned.

Agency response. As a point of clarification, we note that an injury criterion based on chest deflection is not included in FMVSS No. 213. Further, we also note that the authors of the study make the point that limiting the analysis to chest responses could lead to false conclusions, and that multiple injury metrics should be used, not just chest deflection.

The agency agrees that low chest deflections alone are not always a good indicator of a safe condition. Low deflections often accompany cases of submarining and high knee excursion. Low chest deflections can also occur when the belt migrates laterally off the shoulder so that the thorax is not held back and head excursion is exceedingly high. This exemplifies why multiple injury metrics are usually needed to evaluate a safety system. For FMVSS No. 213, we assess booster seats by evaluating the HIII–10C's chest acceleration, head excursion, and knee excursion concurrently. The agency does not believe that either FMVSS No. 213 or the HIII–10C promotes a poor booster seat design in which the shoulder belt is routed close to the neck. As discussed in this rulemaking, we have found that the HIII–10C dummy adequately distinguishes good vs. bad belt routing in the CRS test environment.

3. Abdominal Injury Correlates

The August 31, 2005 NPRM on FMVSS No. 213 discussed NHTSA's work developing abdominal injury criteria for the HIII–10C, including our work on the ''abdominal injury ratio'' (AIR), which uses impulse calculations from the iliac compressive and lumbar shear forces to identify dummy kinematics associated with submarining. A high AIR value occurs with diminished iliac loads in the presence of high lumbar shear loads. This indicates that the belt may have slipped off the iliac and the dummy may have submarined. Thus, greater AIR values correlate indirectly to abdominal injuries.

In comments to the Part 572 NPRM, Advocates requested that the agency implement AIR until such time as an alternative abdominal injury measure has been established.

Agency response. AIR was not proposed in the FMVSS No. 213 NPRM or SNPRMs due to limited data and is not included in the final rule. We note that AIR is empirical; it is not founded upon the biomechanics of injury. (I.e., reduced iliac loads do not cause abdominal injuries. They only identify instances where a belt may have slipped into the abdomen of the dummy, which may or may not lead to injury.) If the AIR criterion were to be imposed, CRS manufacturers could maximize iliac loads to achieve a good AIR score. We have concerns about criteria that encourage high loads of any sort, as this could potentially increase injury risk in another body region or produce some other unexpected consequence.

For immediate use now, the agency has adopted the use of a correlate to abdominal injuries, i.e., knee excursion. The final rule for FMVSS No. 213 imposes limits on knee excursion and

[25] Mertz HJ, Jarrett K, Moss S, Salloum M, ZhaoY, The Hybrid III 10-Year-Old Dummy, Stapp Car Crash Journal, Vol. 45, November 2001.

[26] Tylko S, Dalmotas D (2005), ''Protection of Rear Seat Occupants in Frontal Crashes,'' Proceedings of the 19th International Technical Conference on the Enhanced Safety of Vehicles Conference, Paper No. 05–258.

head excursion for the HIII–10C. The limit on knee excursion prevents restraint manufacturers from controlling head excursion by designing their restraints so that children submarine excessively during a crash. The agency has observed a strong correlation between knee excursion and submarining in the child dummies.[27] Ultimately, a direct biomechanically-based measure of abdominal deformation provides the best means to assess abdominal injuries. Our research plan for the HIII–10C includes developing a pelvis and abdominal modification that will provide such a measurement.

4. Repeatability in Systems Testing

In the Part 572 NPRM, the agency reported on a series of repeatability tests using a dynamic sled. The tests were carried out using a specialized booster seat designed for repeated use. Dorel commented that they cannot follow this protocol when certifying its own seats. Dorel also commented that our repeatability tests seemed to assure a best-case outcome in terms of dummy injury metrics.

Agency response. Dorel may have misconstrued our reporting of these tests as a mandate for additional procedures necessary to qualify the HIII–10C and certify booster seats. This was not our intent. The series of tests were not directly applicable to compliance testing of booster seats. The purpose of the sled tests was to evaluate the repeatability and durability of the HIII–10C dummy kinematics in a pulse approaching FMVSS No. 213 severity. The tests were not to create a best-case scenario for injury reference values. We chose to use a rigid bench seat in conjunction with a limited number of CRS models to minimize the effects of set-up related variables which otherwise could interfere with the assessment of the dummy's own true consistency.

f. Dummy Development Efforts

1. Hybrid III Child Dummy Revisions—Abdomen and Pelvis

Citing the significance of abdominal injuries in children and the lack of instrumentation in the HIII–10C, both CHOP and Advocates urged the agency to redouble our efforts to come up with an appropriate means to assess abdominal injuries with the dummy. Dorel, AAP, and UMTRI also commented on importance of assessing abdominal injuries.

Since the NPRMs of 2005, NHTSA has been actively involved in two principal research efforts aimed at improving abdominal injury assessment in Hybrid III child ATDs. The two efforts focus on the development of a biofidelic, instrumented abdomen along with an appropriately proportioned pelvis.

One effort involves a concept for a fluid-filled abdomen that was reported in 2001.[28] Since then, it has been developed into a silicone shell filled with silicone gel with instrumentation to measure deformation. The shell takes the form of an insert that fills the abdominal cavity of the HIII–6C. The abdominal insert has proven to be reasonably biofidelic when compared with the response of an age-matched animal surrogate.[29] The other effort involves the modification of a standard HIII–6C pelvis to more closely reflect child anthropometry based on data collected by UMTRI on child participants.[30]

NHTSA has also begun work with an SAE working group devoted to integrating abdomen and pelvis technology into the HIII–6C (the SAE dummy abdomen pelvis round robin (DAPRR) working group (August 2008)). In DAPRR, NHTSA is facilitating the development of prototype pelves using UMTRI design criteria [31] to develop a biofidelic retrofit package suitable for assessing pediatric abdominal injuries. Round-robin testing of the prototypes is planned for 2012. The HIII–6C is the primary target of the developing modifications given the greater use rates of six-year-olds vs. ten-year-olds in child restraint systems regulated by FMVSS No. 213. The new pelvis and abdomen designs could possibly be transitioned to the ten-year-old size through dimensional scaling and considerations for biomechanical response differences.

2. Pediatric Research

CHOP, AAP, and Advocates have asked the agency to intensify our research efforts in child biomechanics in general. Many noted that current pediatric crash test dummies have been developed based on biofidelity requirements that were scaled from adult response data.

Since the NPRMs of 2005, the agency has been engaged in several activities aimed at new child specific biofidelity requirements for use in the development of new frontal impact child dummies. These are summarized below and discussed more fully in NHTSA's Biomechanics Research Plan, 2011–2015.[32]

Child anthropometry. In order to properly assess a child's interaction with a booster seat and belt system, we are building a child anthropometry database by collecting whole-body laser scans of 3-, 6- and 10-year-old age ranges in automotive seating positions.

Biomechanical response. We have several projects focused on getting response data that is unique to the pediatric human and not scaled from adult data. For example, to better understand the deformation characteristics of a pediatric thorax, we are collecting force versus deflection data during cardiopulmonary resuscitation of pediatric hospital patients. Additionally, we are collecting data from sled tests of pediatric age-matched surrogates that are being used to quantify thoracic response and spinal kinematics.

Biomechanics of injury. We are studying the relationship between local brain tissue strain and axonal injury in a prepubescent human. This has potential to be used for the basis of new brain injury criteria for children.

Child dummy development. The agency has begun assessing current child ATDs (including those in the Hybrid III family as well as the Q-series) against new pediatric response data. Our first consideration is the need for developing an all-new 6-year-old ATD versus enhancement of the existing HIII–6C. Thereafter, we will consider the need for an advanced 10-year-old ATD.

3. Status of HIC

Advocates have asked the agency to work expeditiously to reinstate a head injury criterion for the HIII–10C.

The agency is committed to resolving the problem that led to our decision to omit HIC as a criterion in FMVSS No.

[27] Klinich, K., Reed, M., Orton, N., Manary, M., Rupp, J., ''Optimizing Protection for Rear Seat Occupants: Assessing Booster Performance with Realistic Belt Geometry Using the Hybrid III 6YO ATD,'' UMTRI Report, University of Michigan, Ann Arbor, MI, March 2011.

[28] Rouhana et al. (2001), ''Development of a Reusable, Rate-sensitive Abdomen for the Hybrid III Family of Dummies,'' Stapp Car Crash Journal, V45.

[29] Kent R, Stacey S, Kindig M, Forman J, Woods W (2006), ''Biomechanical Response of the Pediatric Abdomen, Part 1: Development of an Experimental Model and Quantification of Structural Response to Dynamic Belt Loading,'' Stapp Car Crash Journal, V50, 2006–22–0001.

[30] Klinich, K et al. (2010), ''Development and Testing of a More Realistic Pelvis for the Hybrid III 6-Year-Old ATD,'' Traffic Injury Prevention, 11:606–612.

[31] Reed MP, Sochor MM, Rupp JD, Klinich KD, Manary MA (2009), ''Anthropometric Specification of Child Crash Dummy Pelves through Statistical Analysis of Skeletal Geometry,'' Journal of Biomechanics, V42: 1143–1145.

[32] NHTSA's Biomechanics Research Plan, 2011–2015, Report No. DOT HS 811 474, U.S. Department of Transportation, Washington DC, June 2011.

213 when testing with the HIII–10C. The problem, explained earlier, stems from ATD whole-body motions that induce a hard chin-to-chest contact, not HIC itself. We are working to improve the ATD's chin and sternum designs to mitigate this effect. As described under the heading of child biomechanics within the NHTSA Biomechanics Research Plan,[33] we are also working to attain a better understanding of pediatric body motions in order to engineer a biofidelic head response into an ATD. This includes efforts to characterize the flexibility of an adolescent thoracic spine and its effect on head excursion and upper neck loads. Furthermore, research is underway to better understand the interaction between the shoulder belt and clavicle and its effect on head motion. We are also examining the extent to which chin-to-chest contacts actually occur to children in booster seats in order to model the interaction correctly with a child ATD.

V. Rulemaking Analyses and Notices

Executive Order (E.O.) 12866, E.O. 13563 and DOT Regulatory Policies and Procedures

This rulemaking action has considered the impact of this regulatory action under E.O. 12866 and E.O.13563 and the Department of Transportation's (DOT) regulatory policies and procedures. This rulemaking action was not reviewed by the Office of Management and Budget under E.O. 12866. The rulemaking has also been determined not to be significant under DOT's regulatory policies and procedures (44 FR 11034, February 26, 1979).

There are benefits associated with this rulemaking but they cannot be quantified. The incorporation of the test dummy into 49 CFR part 572 will permit NHTSA to use the ATD in FMVSS No. 213 compliance testing of CRSs for children weighing over 65 lb. In addition, the availability of this dummy in a regulated format will benefit safety by providing a more suitable, stabilized, and objective test tool to the safety community for use in research and development of child passenger safety products.

Based on our dummy purchase contract with FTSS/Denton, the estimated cost of an uninstrumented HIII–10C dummy is approximately $35,000. Instruments necessary to qualify the dummy in accordance with Part 572 include 3 accelerometers for the head (about $500 apiece) and an upper neck load cell (about $10,000). The central sternal potentiometer, needed for the thorax qualification procedure, is included in the base cost of the dummy. For compliance testing, only three accelerometers are needed; they are located at the CG of the thorax rather than the head. All sensors required in compliance and certification procedures are common with other 49 CFR part 572 dummies, so the cost of those instruments may be defrayed to some extent for those who already own them. If the dummy is outfitted with all instrumentation up to its full capability, the total instrumentation cost is about $65,000 in addition to the cost of the dummy.

This document amends 49 CFR part 572 by adding design and performance specifications for a test dummy representative of a ten-year-old child that the agency will use in compliance tests of the Federal child restraint system safety standard, and may use for research purposes. This Part 572 rule does not impose any requirements on anyone. Businesses are affected only if they choose to manufacture or test with the dummy. Because the economic impacts of this final rule are minimal, no further regulatory evaluation is necessary.

Regulatory Flexibility Act

Pursuant to the Regulatory Flexibility Act (5 U.S.C. 601 et seq., as amended by the Small Business Regulatory Enforcement Fairness Act (SBREFA) of 1996), whenever an agency is required to publish a proposed or final rule, it must prepare and make available for public comment a regulatory flexibility analysis that describes the effect of the rule on small entities (i.e., small businesses, small organizations, and small governmental jurisdictions), unless the head of the agency certifies the rule will not have a significant economic impact on a substantial number of small entities. The Small Business Administration's regulations at 13 CFR part 121 define a small business, in part, as a business entity ''which operates primarily within the United States.'' (13 CFR 121.105(a)).

We have considered the effects of this rulemaking under the Regulatory Flexibility Act. I hereby certify that this rulemaking action will not have a significant economic impact on a substantial number of small entities. This action will not have a significant economic impact on a substantial number of small entities because the addition of the test dummy to Part 572 does not impose any requirements on anyone. NHTSA will not require anyone to manufacture the dummy or to test motor vehicles or motor vehicle equipment with it.

National Environmental Policy Act

NHTSA has analyzed this final rule for the purposes of the National Environmental Policy Act and determined that it will not have any significant impact on the quality of the human environment.

Executive Order 13045 and 12132 (Federalism)

Executive Order 13045 (62 FR 19885, April 23, 1997) applies to any rule that: (1) is determined to be ''economically significant'' as defined under E.O. 12866, and (2) concerns an environmental, health, or safety risk that NHTSA has reason to believe may have a disproportionate effect on children. If the regulatory action meets both criteria, we must evaluate the environmental health or safety effects of the planned rule on children, and explain why the planned regulation is preferable to other potentially effective and reasonably feasible alternatives considered by us.

This final rule is not subject to the Executive Order because it is not economically significant as defined in E.O. 12866.

NHTSA has examined this final rule pursuant to Executive Order 13132 (64 FR 43255, August 10, 1999) and concluded that no additional consultation with States, local governments or their representatives is mandated beyond the rulemaking process. The agency has concluded that the final rule does not have federalism implications because the rule does not have ''substantial direct effects on the States, on the relationship between the national government and the States, or on the distribution of power and responsibilities among the various levels of government.'' This rule will not impose any requirements on anyone. Businesses will be affected only if they choose to manufacture or test with the dummy.

Further, no consultation is needed to discuss the preemptive effect of this final rule. NHTSA's safety standards can have preemptive effect in two ways. This final rule amends 49 CFR part 572 and is not a safety standard.[34] This Part

[33] NHTSA's Biomechanics Research Plan, 2011–2015, Report No. DOT HS 811 474, U.S. Department of Transportation, Washington DC, June 2011, pp. 6–10.

[34] With respect to the safety standards, the National Traffic and Motor Vehicle Safety Act contains an express preemptive provision: ''When a motor vehicle safety standard is in effect under this chapter, a State or a political subdivision of a State may prescribe or continue in effect a standard applicable to the same aspect of performance of a motor vehicle or motor vehicle equipment only if the standard is identical to the standard prescribed

Continued

572 final rule does not impose any requirements on anyone.

Civil Justice Reform

With respect to the review of the promulgation of a new regulation, section 3(b) of Executive Order 12988, ''Civil Justice Reform'' (61 FR 4729, February 7, 1996) requires that Executive agencies make every reasonable effort to ensure that the regulation: (1) Clearly specifies the preemptive effect; (2) clearly specifies the effect on existing Federal law or regulation; (3) provides a clear legal standard for affected conduct, while promoting simplification and burden reduction; (4) clearly specifies the retroactive effect, if any; (5) adequately defines key terms; and (6) addresses other important issues affecting clarity and general draftsmanship under any guidelines issued by the Attorney General. This document is consistent with that requirement.

Pursuant to this Order, NHTSA notes as follows.

The issue of preemption is discussed above in connection with E.O. 13132. NHTSA notes further that there is no requirement that individuals submit a petition for reconsideration or pursue other administrative proceeding before they may file suit in court.

Paperwork Reduction Act

Under the Paperwork Reduction Act of 1995, a person is not required to respond to a collection of information by a Federal agency unless the collection displays a valid control number from the Office of Management and Budget (OMB). This rule will not have any requirements that are considered to be information collection requirements as defined by the OMB in 5 CFR part 1320.

National Technology Transfer and Advancement Act

Section 12(d) of the National Technology Transfer and Advancement Act of 1995 (NTTAA), Public Law 104–113, section 12(d) (15 U.S.C. 272) directs NHTSA to use voluntary consensus standards in its regulatory activities unless doing so would be inconsistent with applicable law or otherwise impractical. Voluntary consensus standards are technical standards (e.g., materials specifications, test methods, sampling procedures, and business practices) that are developed or adopted by voluntary consensus standards bodies. The NTTAA directs NHTSA to provide Congress, through OMB, explanations when the agency decides not to use available and applicable voluntary consensus standards.

The test dummy and qualification requirements are based on the work of the SAE Hybrid III Dummy Family Task Group (DFTG). Differences between the DFTG recommendations and this final rule are minor and are based on additional research performed by the agency and on comments to the NPRM.

The following voluntary consensus standards have been used in developing the HIII–10C dummy:

- SAE Recommended Practice J211, Rev. Mar 95, ''Instrumentation for Impact Tests—Part 1—Electronic Instrumentation''; and,
- SAE J1733 of 1994–12 ''Sign Convention for Vehicle Crash Testing.''

Unfunded Mandates Reform Act

Section 202 of the Unfunded Mandates Reform Act of 1995 (UMRA), Public Law 104–4, requires Federal agencies to prepare a written assessment of the costs, benefits, and other effects of proposed or final rules that include a Federal mandate likely to result in the expenditure by State, local, or tribal governments, in the aggregate, or by the private sector, of more than $100 million annually (adjusted for inflation with base year of 1995). Before promulgating a NHTSA rule for which a written statement is needed, section 205 of the UMRA generally requires the agency to identify and consider a reasonable number of regulatory alternatives and adopt the least costly, most cost-effective, or least burdensome alternative that achieves the objectives of the rule.

This final rule does not impose any unfunded mandates under the UMRA. This rule does not meet the definition of a Federal mandate because it does not impose requirements on anyone. It amends 49 CFR part 572 by adding design and performance specifications for a 10-year-old test dummy that the agency will use in FMVSS No. 213 and for research purposes. This final rule affects only those businesses that choose to manufacture or test with the dummy. It would not result in costs of $100 million or more to either State, local, or tribal governments, in the aggregate, or to the private sector.

Plain Language

Executive Order 12866 requires each agency to write all rules in plain language. Application of the principles of plain language includes consideration of the following questions:

—Has the agency organized the material to suit the public's needs?
—Are the requirements in the rule clearly stated?
—Does the rule contain technical language or jargon that is not clear?
—Would a different format (grouping and order of sections, use of headings, paragraphing) make the rule easier to understand?
—Would more (but shorter) sections be better?
—Could the agency improve clarity by adding tables, lists, or diagrams?
—What else could the agency do to make this rulemaking easier to understand?

If you have any responses to these questions, please send them to NHTSA.

Regulation Identifier Number

The Department of Transportation assigns a regulation identifier number (RIN) to each regulatory action listed in the Unified Agenda of Federal Regulations. The Regulatory Information Service Center publishes the Unified Agenda in April and October of each year. You may use the RIN contained in the heading at the beginning of this document to find this action in the Unified Agenda.

Petitions for Reconsideration of This Rule

The petition will be placed in the docket. Anyone is able to search the electronic form of all documents received into any of our dockets by the name of the individual submitting the comment (or signing the comment, if submitted on behalf of an association, business, labor union, etc.). You may review DOT's complete Privacy Act Statement in the **Federal Register** published on April 11, 2000 (Volume 65, Number 70; Pages 19477–78).

List of Subjects in 49 CFR Part 572

Motor vehicle safety, Incorporation by reference.

In consideration of the foregoing, NHTSA amends 49 CFR Part 572 as follows:

PART 572—ANTHROPOMORPHIC TEST DUMMIES

■ 1. The authority citation for Part 572 continues to read as follows:

Authority: 49 U.S.C. 322, 30111, 30115, 30117 and 30166; delegation of authority at 49 CFR 1.50.

---

under this chapter.'' 49 U.S.C. 30103(b)(1). Second, the Supreme Court has recognized the possibility of implied preemption: State requirements imposed on motor vehicle manufacturers, including sanctions imposed by State tort law, can stand as an obstacle to the accomplishment and execution of a NHTSA safety standard. When such a conflict exists, the Supremacy Clause of the Constitution makes the State requirements unenforceable. *See Geier* v. *American Honda Motor Co.,* 529 U.S. 861 (2000).

■ 2. 49 CFR Part 572 is amended by adding a new Subpart T consisting of 572.170—572.177 to read as follows:

Subpart T—Hybrid III 10-Year-Old Child Test Dummy (HIII–10C)

Sec.
572.170 Incorporation by reference.
572.171 General description.
572.172 Head assembly and test procedure.
572.173 Neck assembly and test procedure.
572.174 Thorax assembly and test procedure.
572.175 Upper and lower torso assemblies and torso flexion test procedure.
572.176 Knees and knee impact test procedure.
572.177 Test conditions and instrumentation.
Appendix—Figures to Subpart T of Part 572

§ 572.170 Incorporation by reference.

(a) Certain material is incorporated by reference (IBR) into this part with the approval of the Director of the Federal Register under 5 U.S.C. 552(a) and 1 CFR part 51. To enforce any edition other than that specified in this section, NHTSA must publish notice of change in the **Federal Register** and the material must be available to the public. All approved material is available for inspection at the Department of Transportation, Docket Operations, Room W12–140, telephone 202–366–9826, and is available from the sources listed below. The material is available in electronic format through Regulations.gov, call 1–877–378–5457 or go to *www.regulations.gov*. It is also available for inspection at the National Archives and Records Administration (NARA). For information on the availability of this material at NARA, call 202–741–6030 or go to *http://www.archives.gov/federal-register/cfr/ibr-locations.html.*

(b) NHTSA Technical Information Services, 1200 New Jersey Ave., SE., Washington, DC 20590, telephone 202–366–5965.

(1) A parts/drawing list entitled, ''Parts/Drawing List, Part 572 Subpart T, Hybrid III 10-Year-Old Child Test Dummy (HIII–10C), August 2011,'' IBR approved for § 572.171.

(2) A drawings and inspection package entitled, ''Parts List and Drawings, Part 572 Subpart T, Hybrid III 10-Year-Old Child Test Dummy (HIII–10C), August 2011,'' IBR approved for § 572.171, including:

(i) Drawing No. 420–0000, Complete Assembly HIII 10-year-old, IBR approved for §§ 572.171, 572.172, 572.173, 572.174, 572.176, and 572.177.

(ii) Drawing No. 420–1000, Head Assembly, IBR approved for § 572.171, § 572.172, § 572.173, and § 572.177.

(iii) Drawing No. 420–2000, Neck Assembly, IBR approved for §§ 572.171, 572.173, and 572.177.

(iv) Drawing No. 420–3000, Upper Torso Assembly, IBR approved for §§ 572.171, 572.174, 572.175, and 572.177.

(v) Drawing No. 420–4000, Lower Torso Assembly, IBR approved for §§ 572.171, 572.174, 572.175, and 572.177.

(vi) Drawing No. 420–5000–1, Complete Leg Assembly—left, IBR approved for §§ 572.171, 572.176, and 572.177.

(vii) Drawing No. 420–5000–2, Complete Leg Assembly—right, IBR approved for §§ 572.171, 572.176, and 572.177.

(viii) Drawing No. 420–7000–1, Complete Arm Assembly—left, IBR approved for § 572.171, and,

(ix) Drawing No. 420–7000–2, Complete Arm Assembly—right, IBR approved for § 572.171.

(3) A procedures manual entitled ''Procedures for Assembly, Disassembly and Inspection (PADI) of the Hybrid III 10-Year-Old Child Test Dummy (HIII–10C), August 2011''; IBR approved for §§ 572.171 and 572.177.

(c) SAE International, 400 Commonwealth Drive, Warrendale, PA 15096, call 1–877–606–7323.

(1) SAE Recommended Practice J211/1, Rev. Mar 95, ''Instrumentation for Impact Tests—Part 1—Electronic Instrumentation,'' IBR approved for § 572.177.

(2) SAE Information Report J1733 of 1994–12, ''Sign Convention for Vehicle Crash Testing,'' December 1994, IBR approved for § 572.177.

§ 572.171 General description.

(a) The Hybrid III 10-year-old Child Test Dummy (HIII–10C) is defined by drawings and specifications containing the following materials:

(1) The parts enlisted in ''Parts/Drawing List, Part 572 Subpart T, Hybrid III 10-Year-Old Child Test Dummy (HIII–10C), August 2011'' (incorporated by reference, see § 572.170),

(2) The engineering drawings and specifications contained in ''Parts List and Drawings, Part 572 Subpart T, Hybrid III 10-Year-Old Child Test Dummy (HIII–10C), August 2011,'' which includes the engineering drawings and specifications described in Drawing 420–0000, the titles of the assemblies of which are listed in Table A, and,

(3) A manual entitled ''Procedures for Assembly, Disassembly and Inspection (PADI) of the Hybrid III 10-Year-Old Child Test Dummy (HIII–10C), August 2011.''

TABLE A

Component assembly	Drawing No.
(i) Head Assembly	420–1000
(ii) Neck Assembly	420–2000
(iii) Upper Torso Assembly	420–3000
(iv) Lower Torso Assembly	420–4000
(v) Complete Leg Assembly—left	420–5000–1
(vi) Complete Leg Assembly—right	420–5000–2
(vii) Complete Arm Assembly—left	420–7000–1
(viii) Complete Arm Assembly—right	420–7000–2

(b) The structural properties of the dummy are such that the dummy conforms to this Subpart in every respect before use in any test.

§ 572.172 Head assembly and test procedure.

(a) The head assembly for this test consists of the complete head (drawing 420–1000), a six-axis neck transducer (drawing SA572–S11, included in drawing 420–0000), or its structural replacement (drawing 420–383X), and 3 accelerometers (drawing SA572–S4, included in drawing 420–0000) (all incorporated by reference, see § 572.170).

(b) When the head assembly is dropped from a height of 376.0 ± 1.0 mm (14.8 ± 0.04 in) in accordance with paragraph (c) of this section, the peak

resultant acceleration at the location of the accelerometers at the head CG may not be less than 250 G or more than 300 G. The resultant acceleration vs. time history curve shall be unimodal; oscillations occurring after the main pulse must be less than 10 percent of the peak resultant acceleration. The lateral acceleration shall not exceed 15 G (zero to peak).

(c) Head test procedure. The test procedure for the head is as follows:

(1) Soak the head assembly in a controlled environment at any temperature between 18.9 and 25.6 °C (66 and 78 °F) and a relative humidity from 10 to 70 percent for at least four hours prior to a test.

(2) Prior to the test, clean the impact surface of the skin and the impact plate surface with isopropyl alcohol, trichloroethane, or an equivalent. The skin of the head must be clean and dry for testing.

(3) Suspend and orient the head assembly as shown in Figure T1. The lowest point on the forehead must be 376.0 ± 1.0 mm (14.8 ± 0.04 in) from the impact surface. The 1.57 mm (0.062 in) diameter holes located on either side of the dummy's head shall be used to ensure that the head is level with respect to the impact surface.

(4) Drop the head assembly from the specified height by means that ensure a smooth, instant release onto a rigidly supported flat horizontal steel plate which is 50.8 mm (2 in) thick and 610 mm (24 in) square. The impact surface shall be clean, dry and have a micro finish of not less than 203.2×10^{-6} mm (8 micro inches) (RMS) and not more than 2032.0×10^{-6} mm (80 micro inches) (RMS).

(5) Allow at least 2 hours between successive tests on the same head.

§ 572.173 Neck assembly and test procedure.

(a) The neck assembly for the purposes of this test consists of the assembly of components shown in drawing 420–2000 (incorporated by reference, see § 572.170).

(b) When the head-neck assembly consisting of the head (drawing 420–1000), neck (drawing 420–2000), six-channel neck transducer (SA572–S11, included in drawing 420–0000), lower neck bracket assembly (drawing 420–2070), and either three uniaxial accelerometers (drawing SA572–S4, included in drawing 420–0000) or their mass equivalent installed in the head assembly as specified in drawing 420–1000 (all incorporated by reference, see § 572.170), is tested according to the test procedure in paragraph (c) of this section, it shall have the following characteristics:

(1) *Flexion.* (i) Plane D, referenced in Figure T2, shall rotate in the direction of preimpact flight with respect to the pendulum's longitudinal centerline between 76 degrees and 90 degrees. During the time interval while the rotation is within the specified corridor, the peak moment, measured by the neck transducer (drawing SA572–S11, included in drawing 420–0000) (incorporated by reference, see § 572.170), about the occipital condyles may not be less than 50 N-m (36.9 ft-lbf) and not more than 62 N-m (45.7 ft-lbf). The positive moment shall decay for the first time to 10 N-m (7.4 ft-lbf) between 86 ms and 105 ms after time zero.

(ii) The moment shall be calculated by the following formula: Moment (N-m) = $M_y - (0.01778) \times (F_x)$.

(iii) M_y is the moment about the y-axis in Newton-meters, F_x is the shear force measured by the neck transducer (drawing SA572–S11) in Newtons, and 0.01778 is the distance in meters from the load center of the neck transducer to the occipital condyle.

(2) *Extension.* (i) Plane D, referenced in Figure T3, shall rotate in the direction of preimpact flight with respect to the pendulum's longitudinal centerline between 96 degrees and 115 degrees. During the time interval while the rotation is within the specified corridor, the peak moment, measured by the neck transducer (drawing SA572–S11, included in drawing 420–0000) (incorporated by reference, see § 572.170), about the occipital condyles may not be more than −37 N-m (−27.3 ft-lbf) and not less than −46 N-m (−33.9 ft-lbf). The positive moment shall decay for the first time to −10 N-m (−7.4 ft-lbf) between 100 ms and 116 ms after time zero.

(ii) The moment shall be calculated by the following formula: Moment (N-m) = $M_y - (0.01778) \times (F_x)$.

(iii) M_y is the moment about the y-axis in Newton-meters, F_x is the shear force measured by the neck transducer (drawing SA572–S11, included in drawing 420–0000) (incorporated by reference, see § 572.170) in Newtons, and 0.01778 is the distance in meters from the load center of the neck transducer to the occipital condyle.

(3) Time zero is defined as the time of initial contact between the pendulum striker plate and the honeycomb material. All data channels shall be at the zero level at this time.

(c) *Test procedure.* The test procedure for the neck assembly is as follows:

(1) Soak the neck assembly in a controlled environment at any temperature between 20.6 and 22.2 °C (69 and 72 °F) and a relative humidity between 10 and 70 percent for at least four hours prior to a test.

(2) Torque the hex nut (drawing 420–2000, part 9000130) on the neck cable (drawing 420–2060) (both incorporated by reference, see § 572.170) to 0.9 ± 0.2 N-m (8 ± 2 in-lbf) before each test on the same neck.

(3) Mount the head-neck assembly, defined in paragraph (b) of this section, on the pendulum described in Figure 22 of 49 CFR part 572 so that the leading edge of the lower neck bracket coincides with the leading edge of the pendulum as shown in Figure T2 for flexion tests and Figure T3 for extension tests.

(4)(i) Release the pendulum and allow it to fall freely from a height to achieve an impact velocity of 6.1 ± 0.12 m/s (20.0 ± 0.4 ft/s) for flexion tests and 5.03 ± 0.12 m/s (16.50 ± 0.40 ft/s) for extension tests, measured by an accelerometer mounted on the pendulum as shown in Figure T2 at the instant of contact with the honeycomb.

(ii) Stop the pendulum from the initial velocity with an acceleration vs. time pulse that meets the velocity change as specified below. Integrate the pendulum acceleration data channel to obtain the velocity vs. time curve:

TABLE B—PENDULUM PULSE

Time (ms)	Flexion		Extension	
	M/s	ft/s	m/s	ft/s
10	1.64–2.04	5.38–6.69	1.49–1.89	4.89–6.20
20	3.04–4.04	9.97–13.25	2.88–3.68	9.45–12.07
30	4.45–5.65	14.60–18.53	4.20–5.20	13.78–17.06

§ 572.174 Thorax assembly and test procedure.

(a) The thorax consists of the part of the torso assembly designated as the upper torso (drawing 420–3000) (incorporated by reference, see § 572.170).

(b) When the anterior surface of the thorax of a completely assembled dummy (drawing 420–0000) (incorporated by reference, see § 572.170) is impacted by a test probe conforming to section 572.177 at 6.00 ± 0.12 m/s (22.0 ± 0.4 ft/s) according to the test procedure in paragraph (c) of this section:

(1) Maximum sternum displacement (compression) relative to the spine, measured with chest deflection transducer (drawing SA572–T4, included in drawing 420–0000) (incorporated by reference, see § 572.170), must be not less than 37 mm (1.46 in) and not more than 46 mm (1.81 in). Within this specified compression corridor, the peak force, measured by the impact probe as defined in section 572.177 and calculated in accordance with paragraph (b)(3) of this section, shall not be less than 2.0 kN (450 lbf) and not more than 2.45 kN (551 lbf). The peak force after 20 mm (0.79 in.) of sternum displacement but before reaching the minimum required 37 mm (1.46 in.) sternum displacement limit shall not exceed 2.52 kN (567 lbf).

(2) The internal hysteresis of the ribcage in each impact as determined by the plot of force vs. deflection in paragraph (a)(1) of this section shall be not less than 69 percent but not more than 85 percent. The hysteresis shall be calculated by determining the ratio of the area between the loading (from time zero to maximum deflection) and unloading portions (from maximum deflection to zero force) of the force deflection curve to the area under the loading portion of the curve.

(3) The force shall be calculated by the product of the impactor mass and its measured deceleration.

(c) *Test Procedure.* The test procedure for the thorax assembly is as follows:

(1) The dummy is clothed in a form fitting cotton stretch above-the-elbow sleeved shirt and above-the-knees pants. The weight of the shirt and pants shall not exceed 0.14 kg (0.30 lb) each.

(2) Torque the lumbar cable (drawing 420–4130) (incorporated by reference, see § 572.170) to 0.9 ± 0.2 N-m (8 ± 2 in-lbf) and set the lumbar adjustment angle to 12 degrees. Set the neck angle to 16 degrees.

(3) Soak the dummy in a controlled environment at any temperature between 20.6 and 22.2 °C (69 and 72 °F) and a relative humidity between 10 and 70 percent for at least four hours prior to a test.

(4) Seat and orient the dummy on a seating surface without back support as shown in Figure T4, with the limbs extended horizontally and forward, parallel to the midsagittal plane, the midsagittal plane vertical within ± 1 degree and the ribs level in the anterior-posterior and lateral directions within ± 0.5 degrees.

(5) Establish the impact point at the chest midsagittal plane so that the impact point of the longitudinal centerline of the probe coincides with the midsagittal plane of the dummy within ± 2.5 mm (0.1 in) and is 12.7 ± 1.1 mm (0.5 ± 0.04 in) below the horizontal-peripheral centerline of the No. 3 rib and is within 0.5 degrees of a horizontal line in the dummy's midsagittal plane.

(6) Impact the thorax with the test probe so that at the moment of contact the probe's longitudinal centerline falls within 2 degrees of a horizontal line in the dummy's midsagittal plane.

(7) Guide the test probe during impact so that there is no significant lateral, vertical, or rotational movement.

(8) No suspension hardware, suspension cables, or any other attachments to the probe, including the velocity vane, shall make contact with the dummy during the test.

§ 572.175 Upper and lower torso assemblies and torso flexion test procedure.

(a) The test objective is to determine the stiffness of the molded lumbar assembly (drawing 420–4100), abdominal insert (drawing 420–4300), and chest flesh assembly (drawing 420–3560) on resistance to articulation between the upper torso assembly (drawing 420–3000) and lower torso assembly (drawing 420–4000) (all incorporated by reference, see § 572.170).

(b) When the upper torso assembly of a seated dummy is subjected to a force continuously applied at the head to neck pivot pin level through a rigidly attached adaptor bracket as shown in Figure T5 according to the test procedure set out in paragraph (c) of this section:

(1) The lumbar spine-abdomen-chest flesh assembly shall flex by an amount that permits the upper torso assembly to translate in angular motion relative to the vertical transverse plane 35 ± 0.5 degrees at which time the force applied must be not less than 180 N (40.5 lbf) and not more than 250 N (56.2 lbf).

(2) Upon removal of the force, the torso assembly must return to within 8 degrees of its initial position.

(c) *Test Procedure.* The test procedure for the upper/lower torso assembly is as follows:

(1) Torque the lumbar cable (drawing 420–4130) (incorporated by reference, see § 572.170) to 0.9 ± 0.2 N-m (8 ± 2 in-lbf) and set the lumbar adjustment angle to 12 degrees. Set the neck angle to 16 degrees.

(2) Soak the dummy in a controlled environment at any temperature between 20.6 and 22.2 °C (69 and 72 °F) and a relative humidity between 10 and 70 percent for at least four hours prior to a test.

(3) Assemble the complete dummy (with or without the legs below the femurs) and attach to the fixture in a seated posture as shown in Figure T5.

(4) Secure the pelvis to the fixture at the pelvis instrument cavity rear face by threading four ¼-inch cap screws into the available threaded attachment holes. Tighten the mountings so that the test material is rigidly affixed to the test fixture and the pelvic-lumbar joining surface is 18 degrees from horizontal and the legs are parallel with the test fixture.

(5) Attach the loading adaptor bracket to the spine of the dummy as shown in Figure T5.

(6) Inspect and adjust, if necessary, the seating of the abdominal insert within the pelvis cavity and with respect to the chest flesh, assuring that the chest flesh provides uniform fit and overlap with respect to the outside surface of the pelvis flesh.

(7) Flex the dummy's upper torso three times between the vertical and until the torso reference frame, as shown in Figure T5, reaches 30 degrees from the vertical transverse plane. Bring the torso to vertical orientation and wait for 30 minutes before conducting the test. During the 30-minute waiting period, the dummy's upper torso shall be externally supported at or near its vertical orientation to prevent it from drooping.

(8) Remove all external support and wait two minutes. Measure the initial orientation angle of the torso reference plane of the seated, unsupported dummy as shown in Figure T5. The initial orientation angle may not exceed 20 degrees.

(9) Attach the pull cable and the load cell as shown in Figure T5.

(10) Apply a tension force in the midsagittal plane to the pull cable as shown in Figure T5 at any upper torso deflection rate between 0.5 and 1.5 degrees per second, until the angle reference plane is at 35 ± 0.5 degrees of flexion relative to the vertical transverse plane.

(11) Continue to apply a force sufficient to maintain 35 ± 0.5 degrees of flexion for
10 seconds, and record the highest applied force during the 10-second period.

(12) Release all force at the attachment bracket as rapidly as possible, and measure the return angle with respect to the initial angle reference plane as defined in paragraph (c)(7) of this section three minutes after the release.

§ 572.176 Knees and knee impact test procedure.

(a) The knee assembly for the purpose of this test is the part of the leg assembly shown in drawing 420–5000 (incorporated by reference, see § 572.170).

(b) When the knee assembly, consisting of lower upper leg assembly (420–5200), femur load transducer (SA572–S10, included in drawing 420–0000) or its structural replacement (420–5121), lower leg assembly (420–5300), ankle assembly (420–5400), and foot molded assembly (420–5500) (all incorporated by reference, see § 572.170) is tested according to the test procedure in subsection (c) of this section:

(1) The peak resistance force as measured with the test probe-mounted accelerometer must not be less than 2.6 kN (585 lbf) and not more than 3.2 kN (719 lbf).

(2) The force shall be calculated by the product of the impactor mass and its deceleration.

(c) *Test Procedure.* The test procedure for the knee assembly is as follows:

(1) Soak the knee assembly in a controlled environment at any temperature between 20.6 and 22.2 °C (69 and 72 °F) and a relative humidity between 10 and 70 percent for at least four hours prior to a test.

(2) Mount the test material and secure it to a rigid test fixture as shown in Figure T6. No part of the foot or tibia may contact any exterior surface.

(3) Align the test probe so that throughout its stroke and at contact with the knee it is within 2 degrees of horizontal and collinear with the longitudinal centerline of the femur.

(4) Guide the pendulum so that there is no significant lateral, vertical, or rotational movement at the time of initial contact between the impactor and the knee.

(5) The test probe velocity at the time of contact shall be 2.1 ± 0.03 m/s (6.9 ± 0.1 ft/s).

(6) No suspension hardware, suspension cables, or any other attachments to the probe, including the velocity vane, shall make contact with the dummy during the test.

§ 572.177 Test conditions and instrumentation.

(a) The following test equipment and instrumentation is needed for qualification as set forth in this subpart:

(1) The test probe for thoracic impacts is of rigid metallic construction, concentric in shape, and symmetric about its longitudinal axis. It has a mass of 6.89 ± 0.012 kg (15.2 ± 0.05 lb) and a minimum mass moment of inertia of 2040 kg-cm^2 (1.81 lbf-in-sec^2) in yaw and pitch about the CG. One-third (⅓) of the weight of the suspension cables and their attachments to the impact probe is included in the calculation of mass, and such components may not exceed five percent of the total weight of the test probe. The impacting end of the probe, perpendicular to and concentric with the longitudinal axis, is at least 25.4 mm (1.0 in) long, and has a flat, continuous, and non-deformable 121 ± 0.25 mm (4.76 ± 0.01 in) diameter face with a maximum edge radius of 12.7 mm (0.5 in). The probe's end opposite to the impact face has provisions for mounting of an accelerometer with its sensitive axis collinear with the longitudinal axis of the probe. No concentric portions of the impact probe may exceed the diameter of the impact face. The impact probe has a free air resonant frequency of not less than 1000 Hz, which may be determined using the procedure listed in the PADI (incorporated by reference, see § 572.170).

(2) The test probe for knee impacts is of rigid metallic construction, concentric in shape, and symmetric about its longitudinal axis. It has a mass of 1.91 ± 0.01 kg (4.21 ± 0.02 lb) and a minimum mass moment of inertia of 140 kg-cm^2 (0.124 lbf-in-sec^2) in yaw and pitch about the CG. One third (⅓) of the weight of the suspension cables and their attachments to the impact probe may be included in the calculation of mass, and such components may not exceed five percent of the total weight of the test probe. The impacting end of the probe, perpendicular to and concentric with the longitudinal axis, is at least 12.5 mm (0.5 in) long, and has a flat, continuous, and non-deformable 76.2 ± 0.2 mm (3.00 ± 0.01 in) diameter face with a maximum edge radius of 12.7 mm (0.5 in). The probe's end opposite to the impact face has provisions for mounting an accelerometer with its sensitive axis collinear with the longitudinal axis of the probe. No concentric portions of the impact probe may exceed the diameter of the impact face. The impact probe has a free air resonant frequency of not less than 1000 Hz, which may be determined using the procedure listed in the PADI (incorporated by reference, see § 572.170).

(3) Head accelerometers have dimensions, response characteristics, and sensitive mass locations specified in drawing SA572–S4 (included in drawing 420–0000) and are mounted in the head as shown in drawing 420–0000 (both incorporated by reference, see § 572.170), sheet 2 of 6.

(4) The upper neck force and moment transducer has the dimensions, response characteristics, and sensitive axis locations specified in drawing SA572–S11 (included in drawing 420–0000) and is mounted in the head-neck assembly as shown in drawing 420–0000 (both incorporated by reference, see § 572.170), sheet 2 of 6.

(5) The chest deflection transducer has the dimensions and response characteristics specified in drawing SA572–S50 (included in drawing 420–0000) and is mounted to the upper torso assembly as shown in drawing 420–0000 (both incorporated by reference, see § 572.170), sheet 2 of 6.

(b) The following instrumentation may be required for installation in the dummy for compliance testing. If so, it is installed during qualification procedures as described in this subpart:

(1) The thorax CG accelerometers have the dimensions, response characteristics, and sensitive mass locations specified in drawing SA572–S4 (included in drawing 420–0000) (incorporated by reference, see § 572.170) and are mounted in the torso assembly in a triaxial configuration within the spine box instrumentation cavity.

(2) The lower neck force and moment transducer has the dimensions, response characteristics, and sensitive axis locations specified in drawing SA572–S40 (included in drawing 420–0000) and is mounted to the neck assembly by replacing the lower neck mounting bracket 420–2070 as shown in drawing 420–2000 (all incorporated by reference, see § 572.170).

(3) The clavicle force transducers have the dimensions, response characteristics, and sensitive axis locations specified in drawing SA572–S41 (included in drawing 420–0000) and are mounted in the shoulder assembly as shown in drawing 420–3800 (both incorporated by reference, see § 572.170).

(4) The IR–Tracc chest deflection transducers have the dimensions and response characteristics specified in drawing SA572–S43 (included in drawing 420–0000) and are mounted to

the spine box assembly as shown in drawing 420–8000 (both incorporated by reference, see § 572.170).

(5) The spine and sternum accelerometers have the dimensions, response characteristics, and sensitive mass locations specified in drawing SA572–S4 (included in drawing 420–0000) and are mounted in the torso assembly in uniaxial fore-and-aft oriented configuration arranged as corresponding pairs in two locations each on the sternum and at the spine box of the upper torso assembly as shown in drawing 420–0000 (both incorporated by reference, see § 572.170), sheet 2 of 6.

(6) The lumbar spine force-moment transducer has the dimensions, response characteristics, and sensitive axis locations specified in drawing SA572–S12 (included in drawing 420–0000) and is mounted in the lower torso assembly as shown in drawing 420–4000 (both incorporated by reference, see § 572.170).

(7) The iliac force transducers have the dimensions and response characteristics specified in drawing SA572–S13 L and R (included in drawing 420–0000) and are mounted in the lower torso assembly as shown in drawing 420–4000 (both incorporated by reference, see § 572.170).

(8) The pelvis accelerometers have the dimensions, response characteristics, and sensitive mass locations specified in drawing SA572–S4 (included in drawing 420–0000) and are mounted in the torso assembly in triaxial configuration in the pelvis bone as shown in drawing 420–0000 (both incorporated by reference, see § 572.170), sheet 2 of 6.

(9) The femur force and moment transducers (SA572–S10, included in drawing 420–0000) have the dimensions, response characteristics, and sensitive axis locations specified in the appropriate drawing and are mounted in the upper leg assembly, replacing the femur load cell simulator (drawing 420–5121) as shown in drawing 420–5100 (all incorporated by reference, see § 572.170).

(10) The tilt sensors have the dimensions and response characteristics specified in drawing SA572–S42 (included in drawing 420–0000) and are mounted to the head, thorax, and pelvis assemblies as shown in drawing 420–0000 (both incorporated by reference, see § 572.170), sheet 2 of 6.

(c) The outputs of transducers installed in the dummy and in the test equipment specified by this part are to be recorded in individual data channels that conform to SAE Recommended Practice J211 (incorporated by reference, see § 572.170) except as noted, with channel frequency classes as follows:

(1) Pendulum acceleration, CFC 180,

(2) Pendulum D-plane rotation (if transducer is used), CFC 60,

(3) Torso flexion pulling force (if transducer is used), CFC 60,

(4) Head acceleration, CFC 1000,

(5) Neck forces, upper and lower, CFC 1000,

(6) Neck moments, upper and lower, CFC 600,

(7) Thorax CG acceleration, CFC 180,

(8) Sternum deflection, Class 600,

(9) Sternum and rib accelerations, Class 1000,

(10) Spine accelerations, CFC 180,

(11) Lumbar forces, CFC 1000,

(12) Lumbar moments, CFC 600,

(13) Shoulder forces, CFC 180,

(14) Pelvis accelerations, CFC 1000,

(15) Iliac forces, CFC 180,

(16) Femur and tibia forces, CFC 600,

(17) Femur and tibia moments, CFC 600.

(d) Coordinate signs for instrumentation polarity are to conform to SAE Information Report J1733 (incorporated by reference, see § 572.170).

(e) The mountings for sensing devices have no resonant frequency less than 3 times the frequency range of the applicable channel class.

(f) Limb joints are set at one G, barely restraining the weight of the limb when it is extended horizontally. The force needed to move a limb segment is not to exceed 2G throughout the range of limb motion.

(g) Performance tests of the same component, segment, assembly, or fully assembled dummy are separated in time by not less than 30 minutes unless otherwise noted.

(h) Surfaces of dummy components may not be painted except as specified in this subpart or in drawings subtended by this subpart.

Appendix—Figures to Subpart T of Part 572

BILLING CODE 4910–59–P

FIGURE T1
HEAD DROP TEST SET-UP SPECIFICATIONS

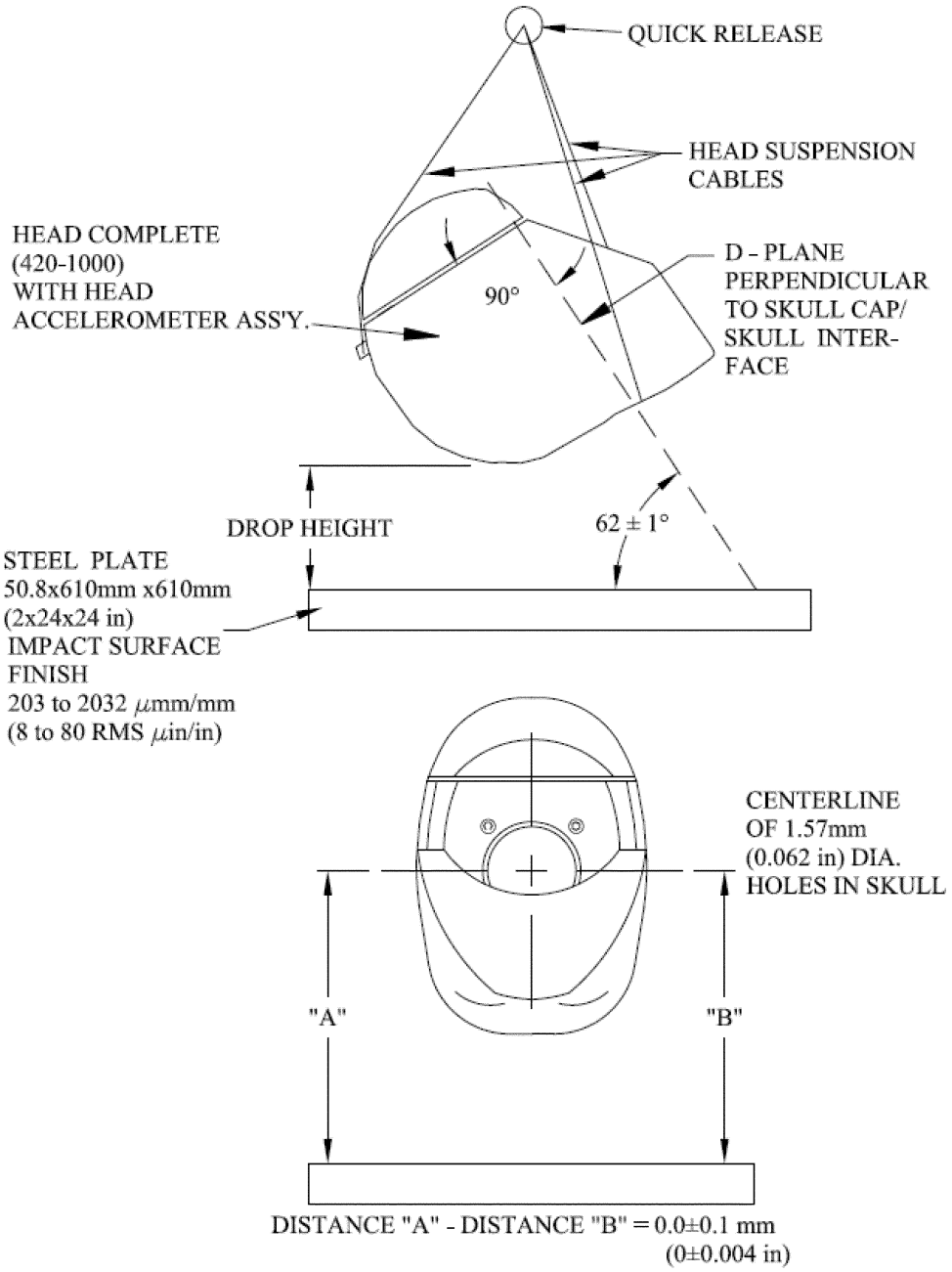

FIGURE T2
NECK FLEXION TEST SET-UP SPECIFICATIONS

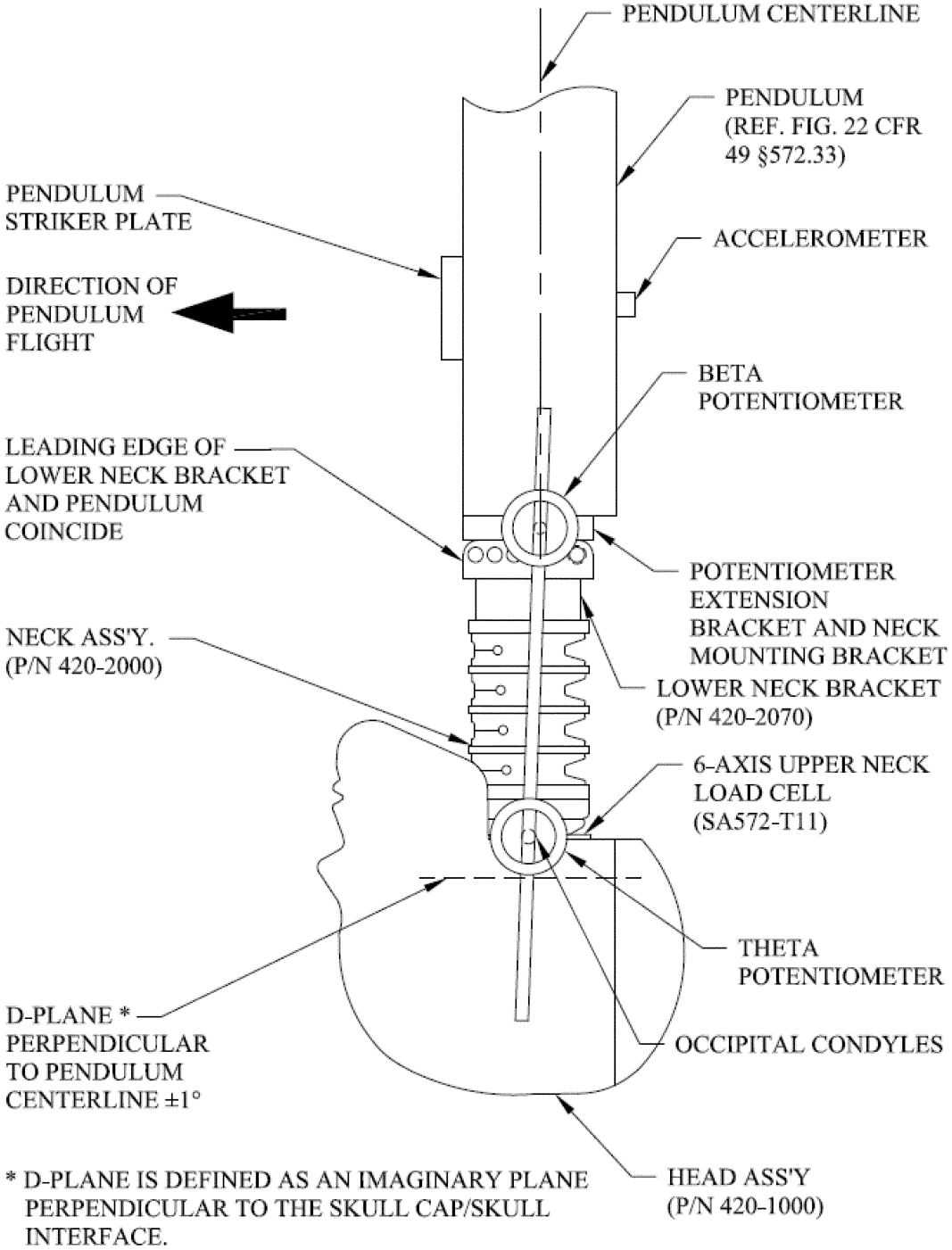

* D-PLANE IS DEFINED AS AN IMAGINARY PLANE PERPENDICULAR TO THE SKULL CAP/SKULL INTERFACE.

FIGURE T3
NECK EXTENSION TEST SET-UP SPECIFICATIONS

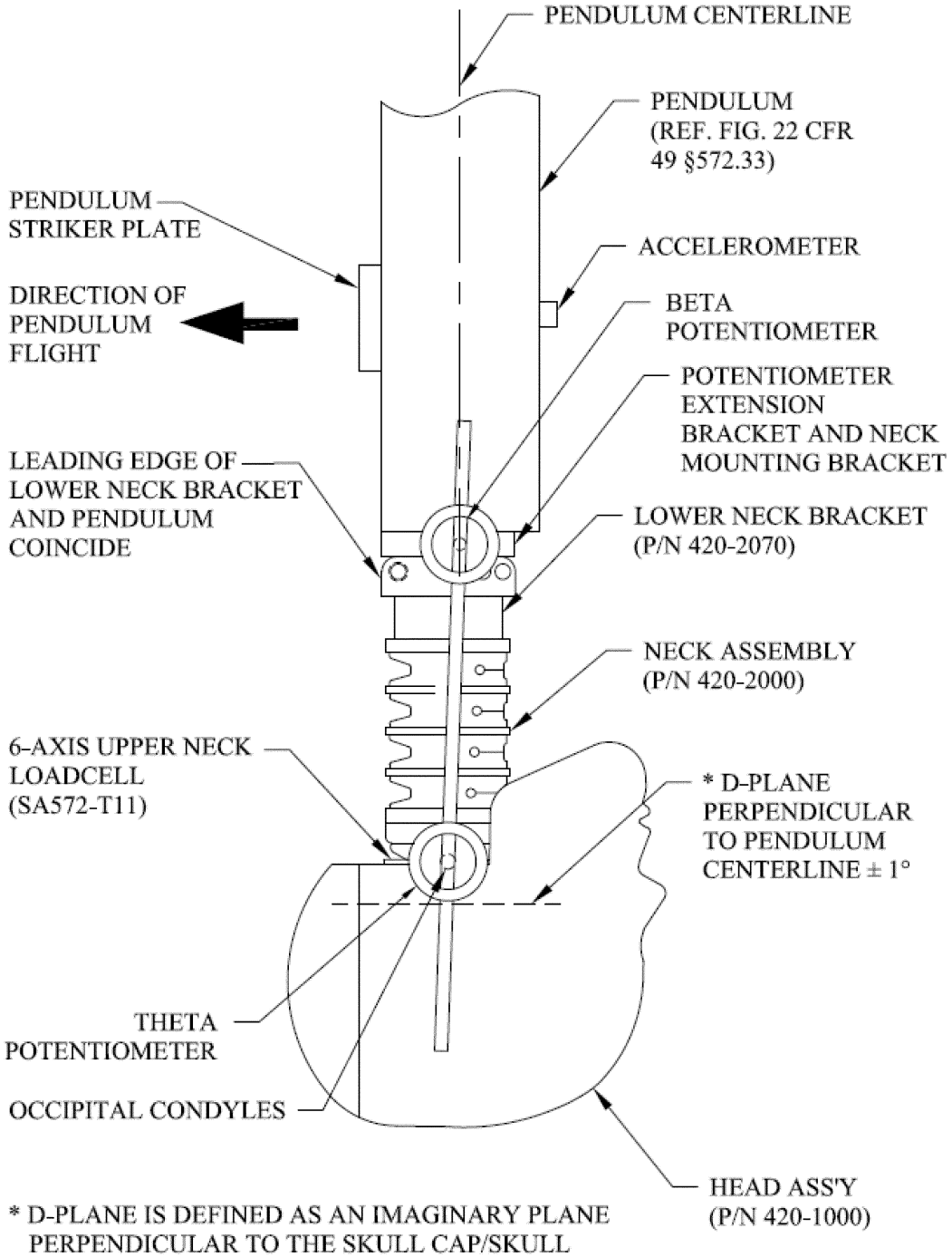

* D-PLANE IS DEFINED AS AN IMAGINARY PLANE PERPENDICULAR TO THE SKULL CAP/SKULL INTERFACE.

FIGURE T4
THORAX IMPACT TEST SET-UP SPECIFICATIONS

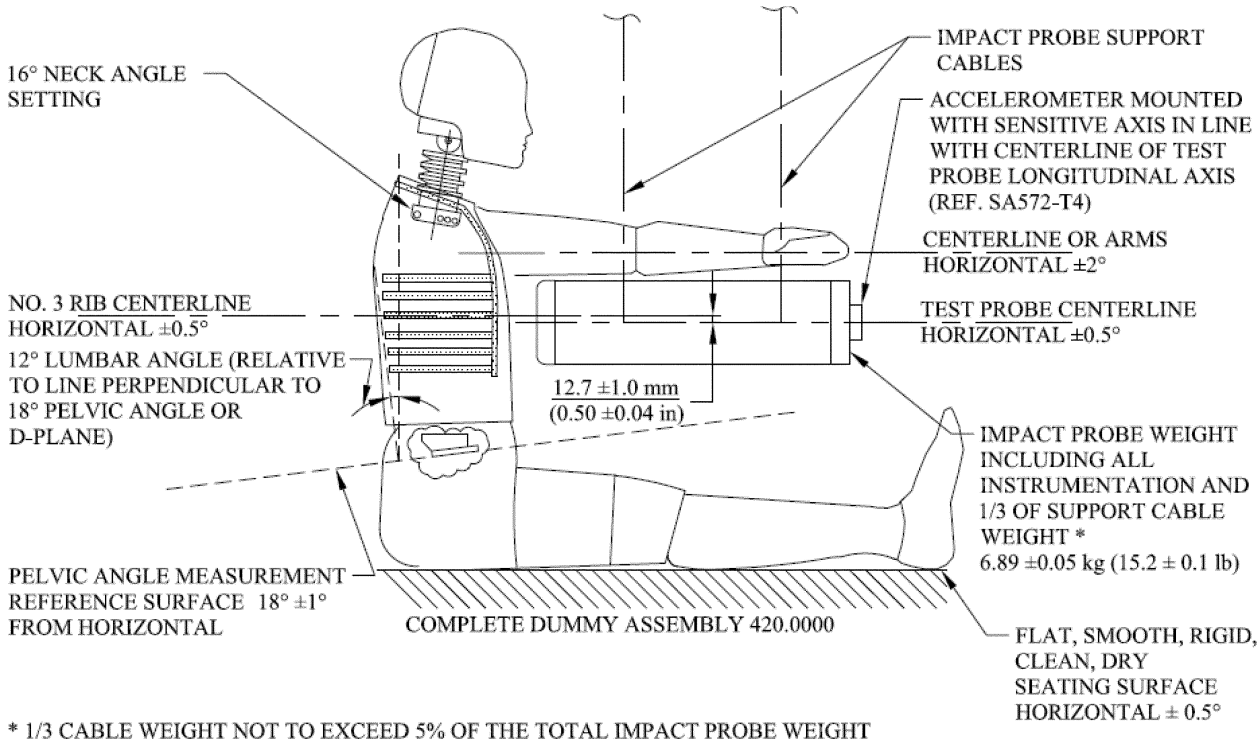

* 1/3 CABLE WEIGHT NOT TO EXCEED 5% OF THE TOTAL IMPACT PROBE WEIGHT

FIGURE T5
TORSO FLEXION TEST SETUP SPECIFICATIONS

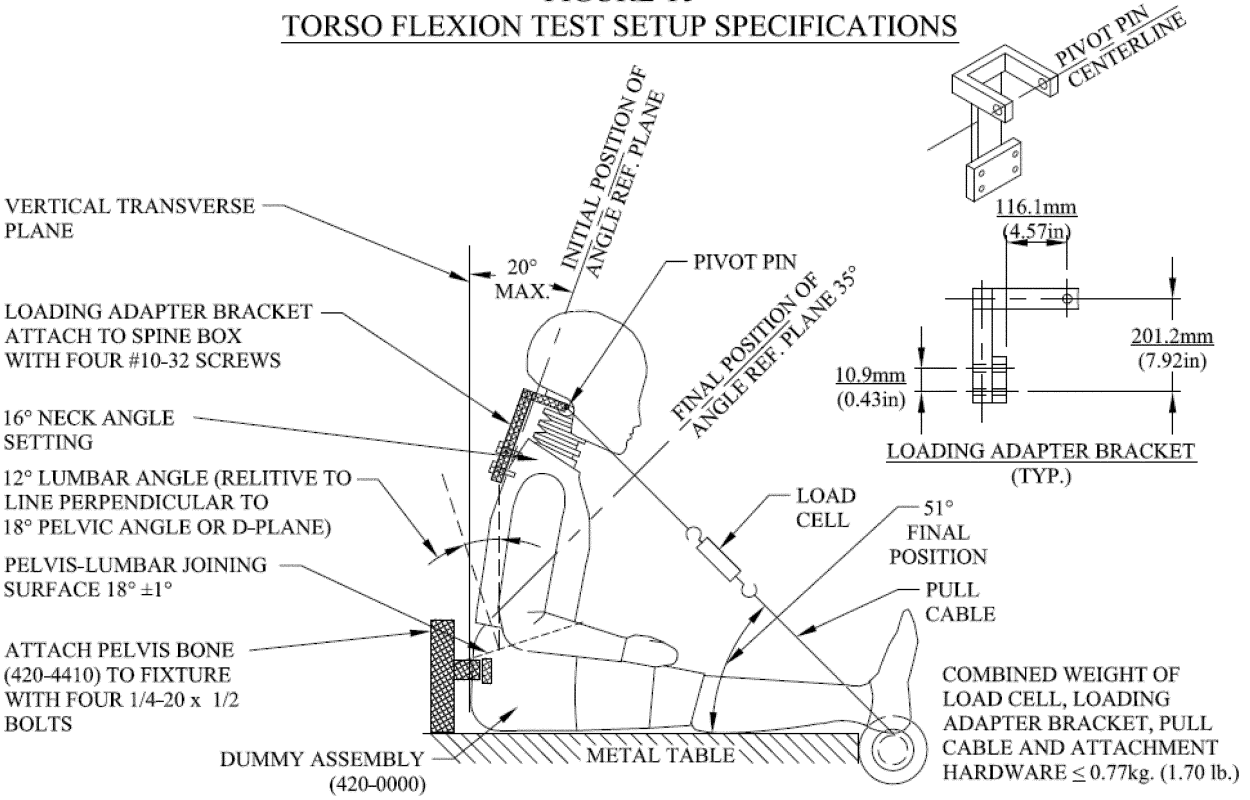

FIGURE T6
KNEE IMPACT TEST SET-UP SPECIFICATIONS

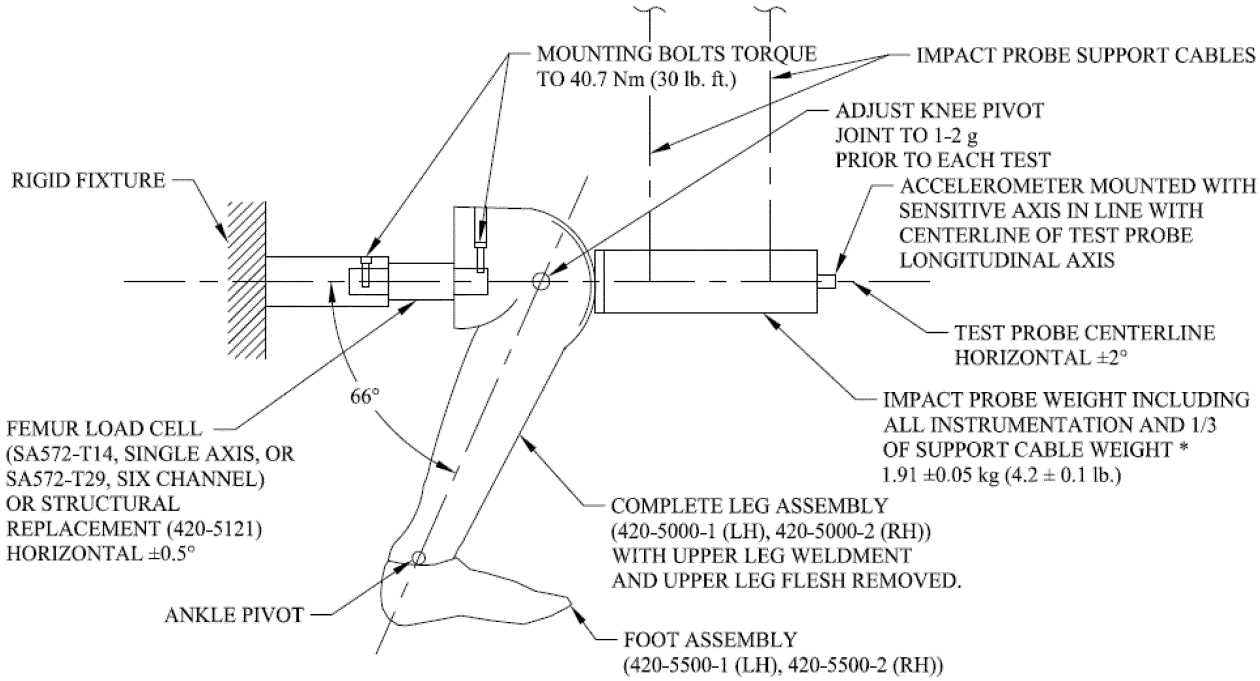

Issued on: February 16, 2012.

David L. Strickland,

Administrator.

[FR Doc. 2012–4129 Filed 2–21–12; 11:15 am]

BILLING CODE 4910–59–C

FEDERAL REGISTER

Vol. 77 Monday,

No. 38 February 27, 2012

Part III

Department of Health and Human Services

Centers for Medicare & Medicaid Services

42 CFR Part 431

Department of the Treasury

31 CFR Part 33

Department of Health and Human Services

45 CFR Part 155

Medicaid Program; Review and Approval Process for Section 1115 Demonstrations; Application, Review, and Reporting Process for Waivers for State Innovation; Final Rules

DEPARTMENT OF HEALTH AND HUMAN SERVICES

Centers for Medicare & Medicaid Services

42 CFR Part 431

[CMS–2325–F]

RIN 0938–AQ46

Medicaid Program; Review and Approval Process for Section 1115 Demonstrations

AGENCY: Centers for Medicare & Medicaid Services (CMS), HHS.

ACTION: Final rule.

SUMMARY: This final rule will implement provisions of section 10201(i) of the Patient Protection and Affordable Care Act of 2010 that set forth transparency and public notice procedures for experimental, pilot, and demonstration projects approved under section 1115 of the Social Security Act relating to Medicaid and the Children's Health Insurance Program (CHIP). This final rule will increase the degree to which information about Medicaid and CHIP demonstration applications and approved demonstration projects is publicly available and promote greater transparency in the review and approval of demonstrations. It will also codify existing statutory requirements pertaining to seeking advice from Indian health care providers and urban Indian organizations for section 1115 demonstration projects, and for the first time impose as regulatory requirements tribal consultation standards that were previously only published as guidance documents.

DATES: These regulations are effective on April 27, 2012.

FOR FURTHER INFORMATION CONTACT: Steven Rubio, (410) 786–1782; or Jessica Schubel, (410) 786–3032.

SUPPLEMENTARY INFORMATION:

I. Background

A. Section 1115 Demonstrations

1. Overview

Section 1115 of the Social Security Act (the Act) allows the Secretary of the Department of Health and Human Services (the Secretary) to waive selected provisions of section 1902 of the Act for experimental, pilot, or demonstration projects (demonstrations), and to provide Federal Financial Participation (FFP) for demonstration costs which would not otherwise be considered as expenditures under the Medicaid State plan, when the Secretary finds that the demonstrations are likely to assist in promoting the objectives of Medicaid. Section 2107(e) of the Act states that the waiver authorities in section 1115 of the Act apply to the Children's Health Insurance Program (CHIP) in title XXI of the Act in the same manner as they apply to the Medicaid program in title XIX of the Act.

States have used section 1115 demonstrations for different reasons. Some States have tested new approaches to providing coverage or improving the scope or quality of benefits in ways that would not otherwise be permitted under the statute. For example, some States have used section 1115 demonstrations to expand eligibility to individuals who would not otherwise qualify for benefits, or to establish innovative service delivery systems. Other demonstrations have constrained eligibility or benefits in ways not otherwise permitted by statute. For example, some demonstrations have provided for a more limited set of benefits than the statute requires for a specified population, implemented cost-sharing at levels that exceed statutory requirements, or included enrollment limits. Some demonstrations have involved financing approaches that are not contemplated in titles XIX or XXI of the Act.

As such, demonstrations can have a significant and varied impact on beneficiaries, providers, States, Tribes and local governments. They can also influence policy making at the State, Tribal and Federal level, by introducing new approaches that can be a model for other States and lead to programmatic changes nationwide. In light of the impact demonstration projects can have, the Congress has determined that the process by which States apply for and the Federal government reviews demonstrations should assure public input. From time to time that process has come under criticism. In recent years, the Congress, the Government Accountability Office (GAO), and the stakeholders representing a range of interests affected by the Medicaid and CHIP programs have raised concerns regarding the need for greater transparency in the submission, review, and approval of demonstration applications.

2. Prior Guidance Related to Public Notice

In the September 17, 2010 **Federal Register** (75 FR 56946), we published the ''Review and Approval Process for Section 1115 Medicaid Demonstrations'' proposed rule. In the September 17, 2010 proposed rule, we detailed the prior guidance that we have provided including the September 27, 1994 **Federal Register** notice entitled ''Medicaid Programs; Demonstration Proposals Pursuant to Section 1115(a) of the Social Security Act; Policies and Procedures''(59 FR 49249) that provided general principles and guidelines governing demonstration projects and provided for a public notice process that was designed to ensure that interested parties would have an opportunity to provide input into the design and review of a State demonstration application.

In 2002, we issued a letter to State Medicaid directors, State Medicaid Director Letter (SMDL) #02–007, to encourage States to facilitate public participation in the development of demonstration applications in an effort to ensure adherence to the public notice procedures outlined in the September 27, 1994 **Federal Register** notice.

In 2002, the GAO issued a report entitled ''Medicaid and SCHIP—Recent HHS Approvals of Demonstration Waiver Projects Raise Concerns,'' finding that HHS had not consistently followed its September 27, 1994 **Federal Register** notice process. GAO specifically noted that, since 1998, HHS had not complied with the **Federal Register** notice procedures. GAO recommended that the HHS Secretary provide for a public process that, at a minimum, included publishing notices of demonstrations in the **Federal Register** and a 30-day comment period.

In a subsequent 2007 report entitled ''Medicaid Demonstration Waivers: Lack of Opportunity for Public Input during the Federal Approval Process Still a Concern,'' the GAO examined demonstration projects in two States and found that HHS did not provide opportunity for public input at the Federal level during the Federal review process. It determined that the States that submitted the demonstration applications made efforts to obtain public input to comply with HHS' September 27, 1994 **Federal Register** notice, but that stakeholders in those States reported lacking access to information during the Federal review process about parts of the demonstration applications that had a significant impact on beneficiaries or having inadequate time to review and comment on the applications. GAO reiterated its longstanding concerns about the lack of public input into section 1115 demonstrations and restated its recommendation for a process that assures public input.

In a January 21, 2009 Memorandum to the Heads of Executive Departments and Agencies, President Obama established

the Federal government's commitment to transparency, participation, and collaboration. Noting that public input can promote efficiency, effectiveness, and accountability in government, the President committed Federal agencies to disseminating information quickly and accessibly, and to ensure increased opportunities for the public to participate in policymaking. The Memorandum required each Federal agency to establish an Open Government plan, and on April 7, 2010, HHS announced its plan to achieve transparency, participation, and collaboration. HHS is committed to timely and responsive administration of the Medicaid and CHIP programs and seeks to assure transparency, input, and collaboration, while also being mindful of the need to avoid duplicative processes and unnecessary administrative burdens and delays.

In May 2010, we met with more than 20 representatives of stakeholder organizations including organizations advocating on behalf of the elderly, people with disabilities and other low income populations, as well as organizations representing health care providers regarding transparency in the demonstration approval process. We also held a listening session open to officials from all 50 States, the District of Columbia, and U.S. Territories.

3. Guidance Related to Tribal Consultation and Seeking Advice From Indian Health Care Providers and Urban Indian Organizations

To foster greater notice and a meaningful opportunity for input, in 2000, the Administration issued Executive Order 13175 regarding ''Consultation and Coordination with Indian and Tribal governments.'' This Executive Order applies to the programs operated by the Federal government and, since States administer Medicaid and CHIP, we have issued guidance to States to conduct consultation with Tribes prior to implementing 1115 demonstration or 1915 waiver requests. Executive Order 13175 mandated the establishment of regular and meaningful consultation and collaboration with tribal officials in the development of Federal policies that have ''tribal implications,'' which are defined as policies or actions ''with substantial direct effects on one or more Indian tribes, on the relationship between the Federal Government and Indian tribes, or on the distribution of power and responsibilities between the Federal Government and Indian tribes.'' On November 5, 2009, President Obama issued a Memorandum for the Heads of Executive Departments and Agencies reiterating the importance of Executive Order 13175 and requiring a detailed plan for compliance with its provisions.

In July 2001, we issued a letter to State Medicaid Directors (SMDL #01–024) that provided direction to States to allow federally-recognized Tribes to participate in the planning and development of Medicaid and CHIP demonstration applications and extensions through a consultation process. The guidance encouraged States to provide information to tribal governments at least 60 days prior to implementation and to provide 30 days for tribes to comment on a State's planned demonstration request. The letter also articulated principles of consultation, such as respect for the sovereign rights of Tribes. In this final rule, we establish consultation procedures that allow States to meet simultaneously both the new statutory requirements pertaining to Indian health care providers and urban Indian organizations, as well as the new statutory requirements that pertain to the public at large under the Affordable Care Act.

4. Changes Made by the Recovery Act and the Affordable Care Act

Section 5006 of the American Recovery and Reinvestment Act of 2009 (Recovery Act) (Pub. L. 111–5, enacted on February 17, 2009), among other protections for Indian beneficiaries in Medicaid and CHIP, required States to seek advice from Indian health programs and urban Indian health organizations concerning Medicaid and CHIP policies before submitting a Medicaid or CHIP State plan amendment, demonstration request or application that would directly affect Indian health programs and urban Indian health organizations. This provision was effective July 1, 2009, and was summarized in a letter to State Medicaid Directors dated January 22, 2010 (SMDL # 10–001).

Section 10201(i) of the Patient Protection and Affordable Care Act of 2010 (Pub. L 111–148, enacted March 23, 2010) (the Affordable Care Act) amended section 1115 of the Act by adding a new subsection (d) to require the Secretary to issue regulations that would ensure the public has adequate opportunities to provide meaningful input into the development of State demonstration projects, as well as in the Federal review and approval of State demonstration applications and renewals. The Affordable Care Act also requires periodic evaluations and implementation reports to ensure that information on the outcomes of demonstration projects is available to the public.

Specifically, new section 1115(d) of the Act provides that these procedural requirements must include review standards pertaining to the goals of demonstration programs, the impact of the demonstration project on costs and coverage, and the plans of the State to ensure that the demonstration will comply with applicable requirements specified in title XIX and XXI of the Act. The statute requires the establishment of a process to provide for public notice and comment on the State level and at the Federal level once an application for a demonstration is received by the Secretary. These public notice and comment processes are meant to ensure a meaningful level of public input. The statute also requires the Secretary to implement reporting requirements for States with approved demonstrations, and to establish a process for the periodic evaluation of demonstration projects. Under section 1115(d)(3) of the Act, the Secretary is required to report annually to the Congress on actions taken for applications for demonstration projects.

In the September 17, 2010 proposed rule, we proposed to implement section 1115(d) of the Act to ensure transparency at each stage of the demonstration development and review process without interfering with the timely submission and review of demonstration proposals. We also proposed to codify the requirements of section 5006 of the Recovery Act that apply to demonstrations.

5. Findings Related to Section 1115 Demonstration Evaluations

We recognize the importance of public availability and understanding of information about the impact and operations of health insurance and health insurance programs, including Medicaid and CHIP. Because demonstration projects are approved to pilot or experiment with new approaches, it is particularly important to evaluate such projects and to share lessons learned. Demonstration evaluations can document policies that succeed or fail and the degree to which they do so informs decisions about the demonstration at issue, as well as the policy efforts of other States and at the Federal level. In particular, evaluations of the impact of demonstration program features that depart from the statutory requirements can inform future decisions with regard to new approaches to coverage and care.

More public involvement, understanding, and access to demonstration project evaluations will

also provide greater understanding of demonstration effectiveness, and compliance. Public involvement can benefit all aspects of the evaluation process, including the process for submission of evaluation designs, approval of demonstration evaluations, and the submission of evaluation reports. Therefore, we are, as part of this transparency rule, codifying our existing policies to ensure greater transparency, communication, and collaboration in the evaluation aspect of the section 1115 demonstration process.

II. Summary of the Provisions of the Proposed Rule and Analysis of and Responses to Public Comments

The September 17, 2010 proposed rule addressed the Affordable Care Act provisions requiring transparency in the process of developing and approving demonstrations. We received a total of 33 timely comments on the September 17, 2010 (75 FR 56946) proposed rule.

A. Basis and Purpose (§ 431.400)

To incorporate the policies and implement the statutory provisions described above, we proposed to add a new subpart G under 42 CFR part 431 to implement the provisions of section 1115(d) of the Act, as amended by section 10201 of the Affordable Care Act. Subpart G includes guidance related to the development of demonstration applications, public notice for States and the Department, monitoring, compliance, evaluation of demonstration projects, and the submission of reports to the Secretary.

We did not receive any comments opposing this new subpart, see no other reason to change our proposed additions, and therefore, we are finalizing these provisions subject to the changes described below.

B. Definitions (§ 431.404)

In § 431.404, we define the terms ''demonstration,'' ''Indian health program,'' ''public notice,'' and ''section 1332 waiver'' that are used in new subpart G under 42 CFR part 431.

We received the following comment concerning the proposed Definitions:

Comment: One commenter requested that CMS include the definition of ''Indian Health Program'' under the Indian Health Care Improvement Act (IHCIA).

Response: We have included the IHCIA definition of ''Indian Health Program'' in the final rule.

C. State Public Notice Process (§ 431.408)

We recognize that demonstrations can have a significant impact on beneficiaries, providers, and States. Demonstrations can also influence policy making at the State and Federal level, by testing new approaches that can be models for programmatic changes nationwide or in other States. For these reasons and under section 10201(i) of the Affordable Care Act, in § 431.408, we proposed to establish a process that promotes transparency, facilitates public involvement and input, and encourages sound decision-making as demonstration applications are designed at the State level. We are also mindful that States have developed their own State-specific procedures for public involvement in policy and program decision-making. Furthermore, Medicaid is a jointly administered Federal/State program. Accordingly, we have attempted to craft our requirements in ways that assure achievement of these statutory objectives while minimizing administrative burden.

We received the following comments concerning the proposed State public notice and comment period.

1. State Public Notice and Comment Period

Comment: While several commenters expressed support for the 30-day public notice period before the section 1115 demonstration application is submitted to CMS, many commenters stated that the period should be expanded to 45 or 60 days. One commenter suggested as an alternative providing a 60-day comment period for new demonstration applications and a 30-day comment period for extensions of existing demonstrations.

Response: One of the goals of this regulation is to balance the need for transparency with the need for timely development, review, and approval of demonstrations. While we appreciate the commenters' suggestions regarding the length of the State comment period, we believe that 30 days strikes an appropriate balance between providing for increased transparency and ensuring timely submission of demonstration applications. In addition, we note that the Administrative Procedure Act has for many decades used 30 days as the normal minimum length for comments on proposed Federal rules. Moreover, our standards are minimums and States may exceed them at their discretion.

Comment: One commenter expressed concern that 20 days is not enough time for States to hold hearings and then analyze and incorporate the comments raised at the hearing into the demonstration application.

Response: The timeframes included in the final rule are the minimum timeframes that the State must follow. Our intention was to provide the State with as much flexibility as possible during the public notice process while maintaining our goal of increased transparency and timely procession of applications.

Comment: One commenter was concerned as to how States should discuss differing opinions between a local chapter and the National chapter of a stakeholder association in the document of consultation activities under § 431.408(b).

Response: The State should include a summary of all comments aired in the consultation process, and may describe this type of situation in its report addressing the key issues raised in that process and how it took those comments into consideration, including comment on both sides of the issue, when finalizing its application. Neither Federal nor State governments are bound to follow public comments, but simply to consider them before making final decisions.

Comment: One commenter requested that the State produce a summary report on comments it received and how the comments influenced the content of the application, if at all.

Response: The information that the commenter wanted in a summary report was included in the proposed rule as part of the application submitted to CMS at § 431.412(a)(1)(viii). Since this application is publicly available, the commenter will have access to this information and an additional required report is unnecessary.

2. Statement of Public Notice and State Public Input Procedures

Comment: One commenter recommended that CMS revise the regulation to bring it into compliance with the cost-sharing provisions of the Medicaid Act, as amended by the Deficit Reduction Act (DRA) of 2005.

Response: This comment is beyond the scope of this rulemaking document, and therefore, we are not addressing it in this final rule.

Comment: One commenter recommended that CMS require the State to publish its public notice in both the State Register and local newspapers.

Response: By requiring the demonstration application and hearing notice to be posted on the main page of the State's Web site, we believe it is unnecessary to also require notice in both the State Administrative Register and newspapers with significant circulation. We have accordingly retained State discretion to choose either its Administrative Register or newspaper (or both) as vehicles to

provide public notice in addition to requiring notice on the main page of the State's Web site. We have also required States to use additional approaches, such as electronic mailing lists to provide public notice. Of course, it is likely that news media, other media, and advocacy organizations will use their own means to spread this information.

Comment: One commenter recommended that CMS require States to seek input from providers; similar to the tribal consultation requirement.

Response: While we understand the commenter's concern, we did not revise the language in this rule to require States to seek input from providers similar to the manner in which they conduct tribal consultation. There are specific requirements to seek advice from Indian health providers and urban Indian organizations outlined in the statute, and therefore, this rule needs to meet the statutory ARRA protections. Other providers will have an opportunity to offer their views in the process for public input along with other interested parties. The purpose of the public comment process is to provide all stakeholders an ample opportunity to comment.

Comment: Many commenters recommended that States be required to include a list of waiver and expenditure authorities in their applications, and requested that this list be included in the State's public notice as well.

Response: We are accepting this recommendation but we note that the public notice will not be considered deficient if the waivers and expenditure authorities granted to facilitate the demonstration are different than those the State contemplates. The actual waivers and expenditure authorities awarded will be based on CMS analysis of the waivers and expenditure authorities that are actually needed to accomplish demonstration objectives.

Comment: One commenter requested that CMS clarify that the financial analysis of changes to the demonstration requested by the State is for renewal applications only.

Response: We agree with this comment, and have included language to this effect in the final rule. The distinction was clear in the proposed § 431.412 and we have revised the final rule at § 431.408 to be consistent.

Comment: One commenter noted that it is unclear in the regulation whether the entire public notice document, that is, all the elements prescribed in § 431.408(a)(1), must be published, or whether it can be an abbreviated notice referencing a Web site where the full document can be found.

Response: We have revised the language in § 431.408(a)(2)(ii) to clarify that the public notice document published in either the State's Administrative Record or significant newspapers may be abbreviated, that is, the notice may include a summary of the elements found in § 431.408(a)(1) for purposes of publication; however, the abbreviated notice must provide an active link to a Web site where the public notice may be viewed in its entirety.

Comment: Several commenters noted that public input would be more meaningful if it occurred before the State completed the process of drafting a complete demonstration application, and recommended that CMS allow the State to not post a complete application. The commenters noted that the 30-day Federal comment period would provide a full opportunity for public comment on the complete application once it had been submitted to CMS.

Response: While we appreciate the commenter's concern about ensuring the public has the opportunity to provide input on a proposed demonstration project, we believe that the public must have a specific proposal to respond to to provide meaningful input. We have outlined the required application content in § 431.412(a)(1). The State may also post a draft application that contains sufficient information for the public to provide meaningful input. To provide a full opportunity for public review, there must be at least a 30-day period for public input before the draft application is submitted to CMS. This opportunity for input prior to submission of an application to CMS allows the public to participate in the State's process for developing the application. That opportunity is separate from the opportunity for public comment on the final application under consideration in the Federal review process.

Comment: One commenter requested that CMS require the State to provide summaries of quality data that do not contain patient information and that are detailed enough to allow for public analysis and comment, as well as to provide information on historical expenditures.

Response: The information requested by the commenter is already included in the regulations at § 431.428(a)(4). We do not believe it is necessary to include this information in the public notice requirement.

Comment: One commenter requested that the State include specific Federally-Qualified Health Center (FQHC) related waivers, and the rationale and justification for such waivers in the public notice.

Response: FQHCs play a critical role in serving Medicaid beneficiaries. We are accommodating the commenter's concern in the revision discussed above requiring the State to identify specific waiver and expenditure authorities, as well as requiring a broad program description. We believe this information is sufficient to initiate a dialogue between the State and interested FQHCs on the rationale and justification for the State's proposal.

Comment: One commenter suggested that CMS include language in § 431.408(a)(1)(iii) expressly referring to a time period of at least 30 days for the submission of comments.

Response: We agree with this comment, and have included such language in the final rule.

Comment: One commenter recommended that Medicaid providers affected by the proposed demonstration be required to post information in a conspicuous location so that affected individuals would have an opportunity to comment.

Response: While we appreciate the commenter's desire to involve the provider community, we believe this suggestion would cause an undue administrative burden on providers.

Comment: One commenter requested that CMS require the State to include a link to CMS' Web site on the Web page containing information on the demonstration application.

Response: We agree with this comment, and have included such a requirement in the final rule.

3. Language Requirements

Comment: Several commenters requested further guidance on how CMS plans to ensure that beneficiaries with limited English proficiency will be able to access published information regarding the proposed demonstration. One commenter recommended that CMS utilize the Department of Health and Human Services' Limited English Proficiency (LEP) guidance in selecting languages for translations of published information.

Response: States are subject to various civil rights requirements regarding communication, for both language and disability. These include Title VI of the Civil Rights Act of 1964, Section 504 of the Rehabilitation Act, and the Americans with Disabilities Act. There are regulations under each of these statutes and, in the case of Title VI, detailed guidance published by the Department of Health and Human Services regarding services to individuals with Limited English

Proficiency. We agree with the commenter that this guidance establishes reasonable practices that States are expected to follow.

Comment: One commenter requested that CMS clarify that all documents posted to both the State and CMS Web sites be accessible to individuals with disabilities.

Response: As stated above, there are long-standing regulations in place that govern State practices not only for the activities addressed by this regulation, but also for all programs and activities performed by States and other recipients of Federal financial assistance and, in the case of the Americans with Disabilities Act, State programs and services regardless of Federal financial assistance. States are responsible for compliance and knowing their responsibilities as it relates to accessibility of information and documents for individuals with disabilities. Other Federal agencies (the HHS Office for Civil Rights and the Department of Justice) are responsible for any necessary clarification and enforcement.

4. Electronic Mailing List

Comment: One commenter requested clarification that the electronic mailing lists' purpose is to provide notification that a demonstration application is available for public review and comment.

Response: The electronic mailing lists' purpose is to provide notification that a demonstration application is available for public comment.

Comment: Several commenters expressed concern regarding how an interested party could sign up for the electronic mailing list at the State and Federal levels, as well as how the State and CMS would ensure notification to all interested parties, including Medicaid and CHIP beneficiaries.

Response: The use of such services will depend on State decisions. It is usual practice for links for, or instructions on how to, register for electronic mailing lists to be included, in appropriate places, on State Web sites so that individuals and advocacy groups may easily register for the electronic mailing lists. We will establish notification procedures on our Web site and other venues such as press notifications, as appropriate.

Comment: One commenter requested that the State explain how the electronic mailing list would work while another commenter suggested that the State's Web site provide a way for interested persons to be added to a mailing list. Another commenter expressed concern that the requirement to publish a notice in the newspaper of widest circulation (in each city or county with a population of 50,000 or more) appears to be optional if the State uses an electronic mailing list to notify interested parties. The commenter stated that many people with low-incomes and/or disabilities do not have access to email.

Response: We have revised § 431.408(a)(2)(ii) to clarify that the State must publish its public notice in the newspaper of widest circulation in each region of the State that contains a city with a population of 100,000 or more or in the State's Register, and that it must also utilize a mechanism such as an electronic mailing list to notify interested parties. It is important to ensure that the public notice is not entirely Web-based because there are individuals who may have limited access to, or facility with, Web-based information. On the other hand, there are large numbers of persons who use the Internet who do not subscribe to newspapers. We understand that any of these mechanisms are not necessarily going to reach all consumers and encourage the State, providers and advocacy groups to appropriately transmit the information to affected consumers.

Comment: One commenter recommended that the State's primary care association be automatically included in CMS' electronic mailing list.

Response: As we discuss below, we intend to automatically include all interested national organizations in the Federal electronic mailing list for the Federal public notice process. We would also like to clarify that regional, State and local organizations may request to be included on the notification mechanism at any time.

5. Public Hearings

Comment: While several commenters expressed support for the public hearings, the commenters requested that CMS clarify language to ensure the public has an opportunity to speak at the hearings.

Response: We agree with this comment, and have included language at § 431.408(a)(3).

Comment: One commenter expressed concern that two public hearings may not be adequate for larger States, and recommended that CMS require four public hearings with the option of waiving two hearings for smaller States.

Response: We appreciate, and agree with, the commenter's concern that all interested parties across the State are afforded the same opportunity to provide input on a proposed demonstration project. In lieu of adding two additional public hearings, however, we have revised the language in the rule to require the State to utilize technology, that is, telephonic and/or Web conferencing capabilities, to ensure statewide access to the public hearing, including in rural areas of the State. States remain free, of course, to conduct additional hearings, decisions that we expect will vary widely depending on geography, law, and customary practice in each State.

Comment: One commenter requested that CMS clarify what constitutes two public hearings, that is, the commenter questioned if the hearings have to be held in separate locations, separate dates and times, and if the State utilizes teleconferencing. Another commenter requested that CMS require the State to teleconference the hearing to at least five separate locations.

Response: We have included clarifying language in this final rule outlining that the two public hearings must be held on different dates and in different locations, and that the State must utilize telephonic and/or Web conferencing capabilities that normally provide essentially unlimited geographic access. While we agree that interested parties in rural portions of a State should be afforded the opportunity to provide meaningful input on a proposed demonstration project, we will not prescribe the number of locations to which the State must teleconference the hearing if for some reason it is infeasible to cover the entire State.

Comment: One commenter recommended that CMS require the State to ensure that the State's primary care association and at least two FQHCs have the opportunity to speak.

Response: While we understand the commenter's concern that the State's primary care association and FQHCs have the opportunity to speak, we believe that any interested party should be afforded the opportunity to provide comments on the demonstration. We have also clarified in § 431.408(a)(3) that the public must have an opportunity to speak and provide meaningful input at the public hearings.

6. Tribal Consultation

Comment: While we received general support for tribal consultation, one commenter stated that it is not clear what CMS means by ''publication'' when requiring States to conduct tribal consultation at least 60 days prior to ''publication'' or submission of an application. The commenter also noted that the inclusion of both ''publication'' and submission is confusing. If ''publication'' refers to the date of State

public notice, then the reference to the ''submission'' date is unnecessary because submission will occur after the public notice.

Response: We agree with the commenter's concern, and have clarified the language in § 431.408(b)(1) to read ''submission'' rather than ''publication or submission of an application.''

Comment: One commenter requested that CMS define acceptable consultation activities.

Response: We have clarified the language in § 431.408(b)(2) by including a reference to SMDL # 01–024 which outlines acceptable tribal consultation activities. We also believe that States and tribes can determine how best to conduct such consultation, if they enter into agreements acceptable to both the State and the tribes. We think it likely that details will vary not only from State to State (reflecting the huge diversity among States as to tribal and Indian health presence), but also from demonstration to demonstration. We note that States are required in their applications to present information on their consultations, on issues raised, and on State decisions as to what to propose to CMS. We can and will reject applications that fail to provide appropriate consultation.

Comment: One commenter requested that CMS define ''direct impact,'' and another commenter requested that CMS change ''direct impact'' to ''direct effect,'' as well as include a definition for ''direct effect.''

Response: We have changed ''direct impact'' to ''direct effect'' in § 431.408(b)(1) to be more consistent with the language specified in section 5006(e) of ARRA. We also acknowledge that States may work with tribes, Indian health providers and urban Indian organizations to define direct effect in a manner that meets the needs of all the parties when they have entered into a formal consultation policy with tribes or when they have defined direct effect in the State plan which outlines the process for seeking advice from Indian health providers and urban Indian organizations in the State.

D. Application Procedures

In reviewing section 1115 demonstration applications, CMS requests information from States to determine the nature, scope, and impact of the demonstration request. In this rule, we are requiring application components consistent with current practice both for new demonstrations and for the extension of an existing demonstration, in an effort to make the application process consistent and transparent.

Under § 431.412(a), we define when a State request for a new demonstration will be considered complete for the purposes of initiating the Federal review process described below.

Section 431.412(b) describes the application procedures that States must follow when submitting an application for a new demonstration or a request to extend an existing demonstration under section 1115 of the Act. This provision establishes a process for the State to submit an application, and for CMS to confirm that the application is complete, which in turn initiates the Federal comment and decision-making period. We developed these procedures because they represent a standardized approach that will be helpful to States, stakeholders, and CMS in the review of section 1115 demonstrations. While it is not a requirement for an initial section 1115 demonstration request, we strongly encourage that the Governor submit the demonstration request to the Secretary.

Generally, demonstrations may be extended up to 3 years under sections 1115(a), 1115(e), and 1115(f) of the Act; however, section 1915(h), as amended by section 2601 of the Affordable Care Act, allows section 1115 demonstrations to be extended up to 5 years at the Secretary's discretion if the demonstration provides medical assistance to dually eligible beneficiaries. As sections 1115(e) and (f) of the Act provide for a substantially streamlined Federal review process, the timeframes constrain Federal review of the demonstration and consequently the time under which CMS can consider public input. In § 431.412(c), at least 30 days prior to a State's submission of a request for review under those sections, the State will issue public notice of its intent to seek an extension under those sections and receive public comment on the proposed extension of the demonstration for at least 30 days. In addition, the State must provide a written summary to CMS of the issues raised in the public comment period and how the State considered those issues when developing the demonstration extension application.

The application prerequisites for the extension of a demonstration, codify current practice guidelines employed by CMS in the review of an existing section 1115 demonstration, which are consistent with the required timeframes in section 1115(e) and 1115 (f) of the Act. In § 431.412(c), a demonstration extension request will be considered only if it is submitted no later than 12 months prior to the expiration date of the demonstration when requesting an extension under section 1115(e) of the Act or 6 months (or in some cases longer) when requesting an extension under a section 1115(a) or (f) of the Act.

In § 431.412(c), a demonstration extension request or phase out plan will be sent from the Governor of the State to the Secretary of HHS, as required by the statute, to extend a demonstration under sections 1115(e) and (f) of the Act. However, if an extension application includes substantial changes to the existing demonstration, CMS may, at our discretion, treat the application as an application for a new demonstration.

We received the following comments on the proposed application procedures.

1. Concept Paper

Comment: One commenter requested that the language outlined in the background section regarding the submission of a pre-application concept paper to CMS be included in the final rule.

Response: We agree with this comment, and have included language in the final rule.

Comment: One commenter requested further guidance regarding the process of submitting to CMS a pre-application concept paper and/or conferring with CMS about intent to seek a demonstration prior to submitting a completed application.

Response: The purpose of a concept paper is to engage both the State and CMS in early dialogue on a potential demonstration project. We will not be issuing further guidance on this topic as our intent is not to be prescriptive on the process.

2. Application Templates

Comment: One commenter requested that CMS develop and provide standard demonstration applications for States to use.

Response: We appreciate the commenter's suggestion, and may consider it outside of the content of rulemaking.

3. Application Content—Initial Demonstration Applications

Comment: While several commenters were in support of the proposed application content, several other commenters requested that the demonstration applications should include demographic information on the demonstration population, as well as information on how the demonstration population will be impacted, particularly if the demonstration population is comprised of vulnerable or medically-underserved individuals. One commenter suggested that CMS require the State to provide details on how it will mitigate adverse health

consequences, including outreach and education efforts to assist the vulnerable and medically-underserved populations in obtaining services and to raise awareness.

Response: The State is required to include a description of how current or new beneficiaries will be impacted by the demonstration, as well to describe how the individuals will be impacted by the various programmatic features of the demonstration in its public notice as outlined in § 431.408(a)(1)(i)(A) and (B).

Comment: One commenter requested that demonstration applications proposing to reduce eligibility or benefits should contain explanations of the benefit/eligibility limit(s), the number of people affected and consequences of the reduction.

Response: We believe that we have already addressed the commenter's concern in § 431.412(a)(1)(ii) of this final rule.

Comment: Regarding the inclusion of financial data, one commenter requested that States determine per capita cost per value and how the demonstration would change the total costs and revenues for the State's Medicaid program.

Response: To support analysis needed to establish budget neutrality, we require States to submit historical Medicaid expenditure data for all populations that will be affected by a proposed demonstration. In most cases, States must show on the basis of reasonable with- and without-waiver cost projections that the proposed demonstration will not cost the Federal government more than the program could have cost in the demonstration's absence. Once the demonstration is operational, we require States to report their actual expenditures, which are tracked and compared to the without-waiver estimates (which may be adjusted to account for caseload changes), to ensure that the demonstration remains budget neutral. Any Federal funding received by the State in excess of the without-waiver estimate must be returned to CMS.

Comment: One commenter requested that the State describe specific FQHC related waivers, the rationale and justification for such waivers, if/why such waivers are necessary for the project to achieve its goal, how the demonstration would be adversely affected if the FQHC waiver was not approved, the financial impact on the FQHCs and their ability to provide services, and the written responses and testimony provided by FQHCs during the State public notice process.

Response: FQHCs play a critical role in serving Medicaid beneficiaries. We believe that the current language in the regulation addresses the commenter's request by requiring the State to include information in its application related to the specific expenditure and waiver authorities it is requesting, a narrative description of the proposed project, and identification of key issues, such as those discussed by the commenter, raised during the State's public comment period.

4. Application Submission—Initial Demonstration Applications

Comment: One commenter requested that the date of electronic submission be deemed as the official submission date.

Response: The official submission date is the date in which the State's application was received by the Secretary. We have revised the language in the final rule incorporating this change.

5. Application Procedures—Initial Demonstration Applications

Comment: One commenter requested clarification regarding when CMS would use its discretion to direct an additional 30-day public comment period.

Response: Each demonstration application is unique, and as such, we cannot provide specifics on when we would require an additional 30-day period. We would decide this on a case-by-case basis, but intend to only direct an additional 30-day period when the State has made significant changes to the demonstration relative to the proposal it provided for public input prior to submitting it to CMS.

Comment: One commenter noted that the application procedures section addressed new demonstration applications and extensions, and requested clarification on which notice and comment requirements apply to renewals of existing demonstration projects.

Response: We use ''renewal of an existing demonstration'' and ''extension of an existing demonstration'' interchangeably. In order to prevent additional confusion, we have revised the language in the final rule to make it more consistent, by using the word ''extension'' rather than ''renewal.''

6. Application Content—Demonstration Extension Requests

Comment: One commenter stated that the implementation date of a demonstration program is subject to the Federal approval date of the Demonstration and of an information system's Advance Planning Document (APD). The commenter requested that CMS use the implementation date rather than the approval date when requiring a demonstration extension request.

Response: While we appreciate the commenter's suggestion, APDs are not generally associated with section 1115 demonstrations. Approval dates and implementation dates sometimes differ because a State may need Federal approval before moving forward with steps toward implementation. Generally, when the implementation date is different from the approval date, the Special Terms and Conditions will indicate the implementation date. For demonstration extensions, an APD would be less likely because the State has already implemented the demonstration. The extension, and the timing for the extension application request, would need to date from the expiration of the prior approval period, to avoid a gap in approved operation.

Comment: One commenter expressed concern that important issues would not be included in the State's report of key issues raised during the public comment period. The commenter recommended that CMS delete the word ''key'' as it is subjective.

Response: We have revised the language by deleting the word ''key'' in § 431.412(a)(1) and § 431.412(c)(2).

Comment: One commenter requested greater flexibility when providing the summaries of various quality reports to prevent the submission of irrelevant reports.

Response: We are committed to ensuring that Medicaid beneficiaries receive quality care, and as such, believe the current quality reporting requirements reflect our commitment to quality care.

Comment: One commenter requested that States include their 416 EPSDT/CHIP reports when submitting their demonstration extension requests.

Response: We agree with the commenter, and have revised the language in the final rule.

7. Application Submission—Demonstration Extension Requests

Comment: Several commenters requested clarification regarding the availability of short-term extensions of existing demonstrations, even if initiated less than 12 months prior to the expiration of an existing demonstration. One of these commenters suggested adding language authorizing the Secretary to consider extension requests during the period when a successor demonstration project is under review.

Response: We agree with the commenters, and have incorporated clarifying language into this final rule.

Comment: Several commenters expressed concern over the requirement for States to submit demonstration extension requests 12 months prior to expiration. One commenter suggested that this timeframe be reduced to 6 months.

Response: While we understand the commenter's concern over the timeframe, the 12-month requirement is currently included in the Special Terms and Conditions (STCs) in the majority of the existing demonstrations. The 12-month period gives both the State and CMS adequate time for review. However, we have amended our regulatory language to allow States to submit an extension request 6 months prior to the expiration of a demonstration when requesting an extension under section 1115(a) or (f) of the Act when the Special Terms and conditions do not impose a longer requirement.

Comment: One commenter requested that CMS incorporate language to allow the submitting party of a demonstration extension to include a Governor's designee.

Response: We need to have an assurance that the demonstration is fully supported by State law and State executive authority. As a result, it is our current policy to require the State Governor to submit all new demonstration applications and demonstration extension requests.

8. Demonstration Approval

Comment: One commenter requested that CMS provide an explanation as to the considerations and conclusions reached by CMS that resulted in the agency granting waivers relating to FQHCs and particularly the conclusions reached by CMS as to the impact such waivers would have on the viability of the FQHCs and their continuing capacity to serve Medicaid beneficiaries.

Response: While we understand the commenter's concern regarding the granting of waivers impacting FQHCs, each individual section 1115 demonstration is the product of extensive discussion between the State and CMS about the particular circumstances of the State. We expect the public comments will inform these discussions, but do not believe it is feasible to explain considerations regarding conclusions reached with respect to a particular component of a demonstration.

9. Stakeholder Involvement

Comment: One commenter proposed language for CMS to add to ensure States include a description of current or anticipated mechanisms for stakeholder involvement beyond the comment periods outlined in the rule.

Response: While we appreciate the commenter's suggestion to require States to include how they will continue stakeholder involvement in the demonstration project, we believe the new post-implementation public forum, as well as already established forums such as Medical Care Advisory Committees (MCAC) that are required for each State to advise the Medicaid agency according to § 431.12, provide sufficient level of stakeholder involvement. We encourage States to use these and any additional steps they find most useful to ensure stakeholder involvement.

E. Federal Public Notice and Approval Process (§ 431.416)

We proposed timeframes and action steps to communicate to States and concerned stakeholders the current status and sequential steps in the demonstration review process. This approach standardizes and improves transparency in the section 1115 demonstration review process. In addition, by clearly communicating this process, we will minimize confusion around the demonstration review process, satisfy key stakeholders' need for information and improve communication at the Federal level.

In § 431.416(a), within 15 days of receipt of a complete demonstration application for a new demonstration project or an extension of an existing demonstration project, we proposed we would send the State a written notice.

In § 431.416(b)(2), we proposed to create and solicit subscription to an electronic mailing list for the widespread distribution of information to individuals and organizations interested in demonstration applications.

Under § 431.416(d), we proposed to publish all comments electronically. We will review and consider all comments, but will not provide written responses to public comments.

Under § 431.416(e), we proposed to not render a final decision on a demonstration application until at least 45 days after notice of receipt of a completed application.

Under § 431.416(f), we proposed to maintain, and publish on our Web site, an administrative record.

To ensure that States and the Federal Government are able to respond quickly to emergencies and unanticipated disasters, in § 431.416(g) we proposed to provide a good cause exception to bypass, in whole or in part, the Federal and State notice and comment processes to expedite a decision on a proposed demonstration application or renewal.

We received the following comments concerning the Federal public notice and approval process:

1. Federal Receipt of Demonstration Application

Comment: One commenter recommends that CMS publish the notification of receipt of a State's application to its Web site within the same 15-day timeframe in which the State will be notified of receipt for the public to have access to the information at approximately the same time as the State.

Response: We agree with this comment, and have revised the language in this final rule.

2. Federal Review of Demonstration Applications

Comment: Many commenters expressed support for the 45-day Federal review timeframe; however, some commenters sought clarification regarding a maximum Federal review timeframe and asked whether CMS had a defined process to extend waivers pending review.

Response: Although CMS endeavors to review demonstration requests expeditiously, given the complex and individual nature of each demonstration application, we do not have a maximum allowed timeframe for review. We intend to continue our current practice of providing temporary extensions of existing demonstrations should additional time be required to renew an existing demonstration.

3. Federal Public Comment Period and Process

Comment: One commenter requested clarification on CMS' intended use of any public comment it receives on a State's demonstration application, and whether CMS will make that public comment available to the State prior to publishing those comments on the Web site.

Response: We intend to use the Federal comment period to allow the public the opportunity to provide meaningful input on a State's demonstration application, as well as to ensure that the State has addressed all public comments raised during its public notice period. We will not provide the State with advance notice of the comments prior to publishing them on our Web site.

Comment: Several commenters believed that the Federal comment period should be longer than 30 days. Some commenters suggested expanding the period to 45 or 60 days while other

commenters suggested that CMS increase the comment period on an individual basis.

Response: One of the goals of this regulation is to balance the need for transparency with the need for timely review and approval. While we appreciate the commenters' suggestions regarding the length of the Federal comment period, we believe that 30 days strikes the appropriate balance between transparency and timeliness. The public may submit comments after the Federal comment period has ended; however, we cannot assure that late comments will be considered in the Federal review process. We encourage the public to ensure all comments are submitted during the Federal comment period to ensure that we have an opportunity to review such comments before we render a final decision on a State's demonstration application. We will not render a final decision until 45 days after receipt of a State's demonstration application, and will attempt to ensure that comments submitted after the Federal comment period had ended are considered in the final decision.

Comment: One commenter recommended that CMS publish the State's plan for accepting public comments at the same time that the application and associated concept papers, that is, the start of the Federal comment period, is published.

Response: The State's application will already include the public comments received during its public comment period and how the State took those comments into consideration at the start of the Federal comment period.

Comment: Many commenters acknowledged that CMS would not be able to provide an individualized written response to each comment; however, they requested that CMS provide a summary report of the public comments received and how they have been addressed. One commenter urged CMS to reconsider its position of not responding to individual comments. Another commenter requested that CMS provide written response to public comments relating to waivers of FQHC service and payment protections.

Response: We will post on the CMS Web site page for the application a list of the issues raised during the Federal public notice process as outlined in § 431.416(c)(2). We may include a summary report of frequently raised issues in our regular status updates.

Comment: One commenter requested that providers have direct access to CMS during the Federal public comment period.

Response: While we understand the commenter's concern that providers have the opportunity to provide written comments to CMS, we believe that the Federal public comment period outlined in this rule affords all interested parties the same opportunity to provide comments. We currently meet with interested parties regarding a State's demonstration application, and expect to continue to do so to the extent we deem appropriate and feasible. The Federal Government's own rulemaking procedures under the Administrative Procedure Act emphasize written comments for many reasons, among them the value of written comments in allowing the sharing of commenters' precise views and rationale for those views among the various officials involved in various stages of review, the value of a written record, and the desirability of members of the public having access to the views of all other commenters.

4. Public Disclosure

Comment: Several commenters requested that when CMS publishes updates on State submissions that it posts all materials that the State has submitted as part of the application process. One commenter recommended that CMS clarify that it will post this information on a regular basis, and that the information will include submissions that are pending or have been rejected and not limited to those that have been approved.

Response: We are committed to promoting greater transparency during the demonstration review process, and will post the demonstration application per § 431.416(b), as well as status updates on all submissions on a regular basis.

Comment: One commenter proposed draft language to ensure that CMS post copies of requests from CMS to the State for additional information and the State's responses to those requests, along with timeframes for the public to comment, as well as draft STCs.

Response: While we are committed to promoting greater transparency during the demonstration review process, we also need to protect frank and candid discussions between the State and CMS. While a demonstration application is under review, we believe that publication of these discussions would inhibit the free flow of information. As detailed under § 431.416(f), we will maintain, and publish on our public Web site, an administrative record that will include sufficient documentation to address substantive issues relating to the approval.

Comment: One commenter requested that CMS clarify that all documents posted to both the State and CMS Web sites be accessible to individuals with disabilities.

Response: Individuals with disabilities will have access to demonstration materials. The Federal Government's Web sites are subject to specific accessibility responsibilities and practices dictated by section 508 of the Rehabilitation Act. States are subject to other statutes, including section 504 of the Rehabilitation Act, the Americans with Disabilities Act, and in many cases State-specific statutes. Clarification of those statutes, if needed, is the responsibility of the agencies that administer those statutes. We are committed to ensuring that individuals with disabilities have access to demonstration materials, and believe that the current language in the final rule accomplishes this goal. We intend to issue specific guidance on electronic formats that will be accessible to individuals with disabilities.

Comment: One commenter requested that the State include a link to the CMS Web site on its Web site.

Response: We agree with this comment, and have revised this final rule accordingly.

5. Administrative Record

Comment: Several commenters requested that we include, at a minimum, the following information in the administrative record: State's application; public comments received during the Federal comment period and CMS' responses; and specific requirements related to the approved demonstration, such as implementation reviews, complaints, documents regarding suspensions or terminations, and evaluations on how the demonstration is impacting beneficiaries. One commenter requested that all information regarding the demonstration be posted as the administrative record given that it can be obtained through a Freedom of Information Act request. Another commenter suggested that we amend the proposed language to require the inclusion of evidence that the Secretary properly considered and accounted for the impact of the demonstration project on the human participants.

Response: We appreciate the commenters' suggestions regarding the content of the administrative record, and we believe we have set forth documentation that should comprehensively set forth the basis, purpose, and conditions for the approved demonstration. Regarding the impact of a demonstration project on

human participants, relevant regulations at 45 CFR 46.101(b)(5) contain an exemption for research and demonstration projects that are approved by agency heads, and are designed to study, evaluate, or otherwise examine: a public benefit or service programs; procedures for obtaining benefits or services under those programs; possible changes in or alternatives to those programs or procedures; or possible changes in methods or levels of payment for benefits or services under those programs. We believe most, if not all, section 1115 demonstration projects will fit within this exception. Entities that may receive Medicaid funding under section 1115 demonstration projects will still have to review whether the human subject protection regulations are applicable to them. For example, while a State might not be subject to these regulations when conducting a demonstration to pay for services furnished through clinical trials, a research institution conducting such trials may be subject to these regulations.

Comment: One commenter requested clarification that the administrative record will be publicly accessible on CMS' Web site.

Response: Yes, the administrative record will be publicly available on our Web site. We have revised the regulatory language to clarify our intent.

6. Disaster Exemption

Comment: Many commenters requested that CMS limit the public notice exception to natural or man-made disasters such as earthquakes, floods, or terrorist attacks or a public health disaster and not extend beyond these events. One commenter suggested that CMS post an explanation of the reasons for the exception on the CMS Web site, along with a timeline for accepting public comments on emergency measures.

Response: We have revised the language in the final rule to clarify that the public notice exemption applies only to natural disasters, public health emergencies, or other emergency threats to human lives. Should we approve a State's disaster exemption request, we will post the approval letter on our Web site within 15 days of approval and the revised timeline for public comment, if applicable.

Comment: Several commenters requested that CMS incorporate proposed language excluding demonstration applications seeking to restrict eligibility and/or reduce benefits or increase cost-sharing for beneficiaries from a disaster exception.

Response: We understand the commenters' concern on this issue; however, the purpose in providing an exception to public notice during a disaster is to enable the State to move nimbly during the response period. In most disaster cases, we grant authorities to States allowing them to expedite processes to ensure coverage to populations impacted by the disaster. We expect that in such cases States will seek to maintain or expand affordable coverage for affected populations.

Comment: Several commenters requested that CMS provide greater flexibility when providing exceptions to address legislative activities and the State legislature's schedule. One commenter expressed concern at potentially having to repeat the public notice process when the nature of the demonstration changes as a result of legislative action.

Response: We understand that demonstration projects may be impacted by legislative changes; however, we believe the language in the final rule provides States flexibility in the public notice process should a change occur. Changes that do not substantially change the nature and scope of the demonstration project will not cause the State to repost the application for additional public comment. We may, at our discretion, require the State to repost for an additional 30-day public comment period should the revised demonstration application contain substantial changes to the initial application. We believe that the additional 30-day comment period is necessary if the State takes action to substantially delay the approval process.

F. Monitoring and Compliance (§ 431.420)

As section 1115 demonstrations have a significant impact on beneficiaries, States and the Federal government, we are establishing processes and methodologies to assure we have adequate and appropriate information regarding the effectiveness of section 1115 demonstrations. Under § 431.420(a), we proposed that States must comply with all applicable Federal laws, regulations, policy statements and Departmental guidance unless a law or regulation has specifically been waived or determined not applicable under the demonstration. Under section 1115 CMS has no authority to waive requirements that are not contained in parts of the Social Security Act specifically enumerated in that section, or otherwise delegated to CMS for this purpose. For example, CMS has no authority to exempt a State from laws or regulations administered by another Federal Department or agency. We have reworded the language to clarify this and to emphasize the limited scope of section 1115 demonstrations.

Under § 431.420(b), as part of the special terms and conditions of any demonstration project, we proposed that States will conduct periodic reviews related to the implementation of the demonstration.

Under § 431.420(c), we proposed that States will publish the date, time, and location of the public forum in a prominent location on the State's public Web site at least 30 days prior to the date of the planned public forum.

Under § 431.420(d), we proposed to affirm the Secretary's right to suspend or terminate a demonstration, in whole or in part, any time before the date of expiration, whenever it determines that the State has materially failed to comply with the terms of the demonstration project.

In § 431.420(f), should we undertake an independent evaluation of any component of the demonstration, we proposed the State must cooperate fully with CMS or the independent evaluator selected by CMS. The State must submit all necessary data and information to CMS or the independent evaluator.

We received the following comments concerning monitoring and compliance:

1. Implementation Reviews

Comment: One commenter requested additional detail concerning the implementation review, that is, what the review should entail, how such a review is to be conducted and reported, etc.

Response: The State must comply with the implementation review requirement as outlined in the demonstration's STCs.

Comment: One commenter noted that the regulation does not address quarterly reports, and asked if the implementation reviews replaced these reports.

Response: States will be required to comply with requirements, such as the submission of quarterly reports, found in their STCs. Implementation reviews will not replace these requirements.

2. Complaints

Comment: One commenter asked if complaints will be shared with the State or if the State would be given the opportunity to respond to such complaints. The commenter recommended that CMS share all complaints received with the State as outlined in § 431.420(b)(2).

Response: We believe it is in the best interests of States, the Federal government, providers and beneficiaries

to share such complaints with the State to ensure that any appropriate corrective action occurs. As such, we have revised the language in the final rule to reflect this.

Comment: One commenter proposed language to the monitoring and compliance section clarifying that CMS will publish information on its Web site explaining how to file a complaint and that documented complaints will be reviewed by CMS.

Response: While it is current practice for complaints to be submitted, reviewed and responded to by the Regional Office which works most closely with the State in question, we are committed to ensuring that all documented complaints are reviewed and responded to by CMS. We will provide guidance on our Web site on how the public can file complaints with CMS.

3. Post Award Public Forum

Comment: While many commenters expressed support for the post award public forum, the commenters requested that CMS clarify language to ensure the public has opportunity to speak at the post award public forum.

Response: We agree with this comment, and have included language in the final rule.

Comment: One commenter stated that the post-award public forum is onerous, particularly in combination with the periodic implementation review requirement, and recommended that CMS allow States to utilize forums already established to receive comments from the public regarding the Medicaid programs.

Response: We believe that the post-award public forum is important in accomplishing greater transparency, ensuring meaningful public input into the implementation process, and is an important aspect of the evaluation component established by the law. The final rule allows the State to use already established forums to comply with this requirement.

Comment: One commenter noted that the proposed rule is inconsistent with the Medical Care Advisory Committee (MCAC) regulations at § 431.12 which requires each State to have a MCAC and to assure that the MCAC has the opportunity to participate in policy development. As such, the commenter recommended that CMS remove the optional use of the State's MCAC in § 431.408(a)(3) and § 431.420(c), and require the State to include its MCAC in the development of the State's demonstration application.

Response: We disagree with the commenter. We believe that it is more appropriate to give the State the choice of venue in holding the public forum. States have different ways in which they structure and organize their oversight and advisory structures. In some States, the MCAC meetings are not open to the public but other types of panels are open to public comment. This regulation does not in any way limit the MCAC's role in policy development.

Comment: One commenter expressed concern that 6 months may not be enough time to see the impact and outcomes of a demonstration, and recommended that CMS require the forum to be held 12 months after implementation rather than 6 months.

Response: Our intent in requiring the forum within 6 months of implementation is to allow the public to provide initial feedback on implementation. This is beneficial to both the State and the beneficiaries as it will allow the State to address any problems associated with the initial implementation of the demonstration.

Comment: One commenter requested that CMS require States to summarize the comments imparted at the forum and immediately submit the summary for CMS review.

Response: We believe that the current requirement is sufficient and accomplishes our goal of balancing transparency with minimal administrative burden to the State. We have revised language in § 431.420(c) requiring the State to provide a summary of the forum in the quarterly report associated with the quarter in which the forum was held, as well as in the State's annual report.

4. General

Comment: While we did receive several comments supporting the monitoring and compliance provisions of this rule, we also received several comments requesting the deletion of § 431.420(a)(2) as it conflicts with § 431.420(d).

Response: We agree with this comment, and have revised the language in the final regulation.

Comment: One commenter requested that CMS define ''interpretive policy statement'' and ''interpretive guidance'' as specified in § 431.420(a)(1).

Response: These terms have the same meaning, and we are revising the rule to use only the term ''interpretive guidance'' to refer to HHS or CMS guidance on the Federal interpretation of applicable Federal laws and regulations that have been communicated to the State through CMS manuals, letters to State Medicaid Directors, or other communications giving State notice of the Federal interpretation.

Comments: One commenter requested that a State receive advance notification of monitoring and compliance issues, with a chance for the State to appeal any finds for noncompliance, termination, or suspension.

Response: We will promptly notify the State of any monitoring and compliance issues. To the extent that there are consequences for the State, and available appeal processes, the special terms and conditions will describe those details.

Comment: A few commenters requested that CMS clarify that demonstrations may be terminated only if the State fails to materially comply with the agreed upon terms and conditions.

Response: We have clarified the language in the rule to provide that the Secretary may suspend or terminate a demonstration if the State fails to materially comply with the agreed upon terms and conditions. We also added language clarifying that the Secretary may also withdraw waivers or expenditure authorities based on a finding that the demonstration project is not likely to achieve the statutory purposes. The terms and conditions for the demonstration will detail any notice and appeal rights for the State for a termination, suspension or withdrawal of waivers or expenditure authorities.

G. Evaluation Requirements (§ 431.424)

In § 431.424(a), we proposed that the Secretary may use a broad range of evaluation strategies developed by States but subject to Secretarial approval in the application of evaluation techniques for measuring the effectiveness and usefulness of demonstration projects as models that help shape health care delivery and policy.

In § 431.424(b), we proposed the criteria that should be included in demonstration evaluations.

In § 431.424(c), we proposed that States submit and receive CMS approval of a design for an evaluation of the demonstration (or extension) and publish to the State's public Web site the draft demonstration evaluation design within 30 days of CMS approval.

In § 431.424(d), in the event the State submits a request to extend the demonstration beyond the current approval period under the authority of sections 1115(a), (e), or (f) of the Act, we proposed that the State shall include an interim evaluation report as part of the State's request for each subsequent renewal. State evaluations must be

published on the State's public Web site within 30 days of submission to CMS.

In § 431.424(e), we proposed that States will publish the approved demonstration evaluation design on the State's public Web site within 30 days of CMS approval.

In § 431.424(f) regarding Federal evaluations, we proposed that States must comply with all requirements set forth in this subpart.

In § 431.424(g), we proposed that we will post, or provide a link to the State's public Web site, all evaluation materials, including research and data collection, on our Web site for purposes of sharing findings with the public within 30 days of receipt of materials.

We received the following comments on the evaluation requirements.

1. Evaluation Design Plan

Comment: Several commenters suggested that the evaluation design plan could be strengthened by incorporating some of the components referenced in the section governing annual reports. In particular, the commenters stated that the evaluation designs should evaluate how the demonstration impacts the outcome of care, quality of care, cost of care, and access to care for demonstration populations, where appropriate.

Response: While we appreciate the commenters' suggestion, we believe that the State should have flexibility, subject to CMS approval, in determining which indicators that it would like to evaluate when designing the demonstration's evaluation plan in light of the different kinds of demonstrations that are approved. Additionally, we believe that the indicators mentioned in the commenters' suggestion are inherent to an evaluation design plan.

Comment: Several commenters requested that language protecting beneficiaries' privacy be included in § 431.424(a)(2).

Response: We agree with this comment, and have included language in the final rule. We note that existing Federal statutes, most notably the Privacy Act and HIPAA, prevent disclosure of protected personal information. In addition, the release, disclosure, or use of personal information is governed by the requirements 42 CFR 431, subpart F.

Comment: Due to the fact that some information required in the evaluation section is contingent upon the selection of potential contractors, one commenter requested that the evaluation information be submitted to CMS at a conceptual level including as much information as is available with more detailed information following selection of the contracting entity. The commenter recommended that an exemption allowance be considered for demonstration projects that will be implemented by contracted staff.

Response: We understand the commenter's concern, and it is current practice to allow States to revise their evaluation design plans once a contractor has been selected, if necessary. We do not believe such a procedure is inconsistent with the proposed regulations, and thus we are not making any revisions to these final regulations. On the issue of the ''exemption allowance,'' we do not see any basis for a broad exemption from evaluation requirements.

2. General

Comment: Given the fact that data necessary to fully evaluate a demonstration may not be available until well after the demonstration ends, one commenter questioned if CMS would consider extending the evaluation's due date beyond the waiver expiration in such cases.

Response: It is our practice to include language in the STCs requiring the State to submit an evaluation 120 days after the expiration of the demonstration. We will decide on a case-by-case basis to extend this timeframe should a State need additional time to comply.

Comment: One commenter expressed concern over the difficulty in isolating the effects of the demonstration from other changes occurring in the State at the same time, and would need to exclude some demonstration participants from the ''other changes.'' The commenter believed that this would result in a more complicated evaluation design that would be difficult and expensive to implement, and requested that the evaluation requirement be deleted from the final rule.

Response: The purpose of a demonstration is to test new approaches to coverage, delivering care, improving quality, etc. Evaluation is required to measure the effectiveness and usefulness of the demonstration as a model to help shape health care delivery and policy.

Comment: One commenter requested that data collection comply with the Office of Management and Budget's (OMB) 1997 revised standards for the collection of race and ethnicity data.

Response: We will ensure that data collected during the evaluation of the demonstration project complies with OMB's 1997 revised standards for the collection of race and ethnicity data, as appropriate. As a technical matter, these standards apply only to data collection by the Federal government itself, and of course they can only be used when feasible, which is not always the case in research and evaluation activities, such as studies using medical or administrative records that do not use the OMB categories.

Comment: One commenter stated that while it is helpful for the public to comment on the evaluation parameters, CMS should require the State to provide opportunity for public review and comment on the State's evaluation design.

Response: The public is afforded the opportunity to comment on the evaluation design plan as the State must publish its application on its Web site or a demonstration specific Web page as outlined in § 431.412(a)(2)(i). The evaluation design plan is a required component of the State's application.

Comment: One commenter requested that CMS include a deadline for publishing the evaluation design and reports on both the State and CMS Web sites.

Response: We agree with this comment, and have included language in the final rule.

H. Reporting Requirements (§ 431.428)

In order for CMS to effectively monitor the implementation of a demonstration, we proposed that States will submit an annual report, as described in § 431.428(a).

In § 431.428(b), we proposed that States will submit a draft annual report to CMS no later than 90 days after the end of each demonstration year. Within 60 days of receipt of comments from CMS, the State will submit a final annual report for the demonstration year to CMS. The draft and final annual reports are to be published on the State's public Web site.

We received the following comments concerning annual reporting:

1. Annual Reports

Comment: One commenter requested that we clarify the ''grievances and appeals'' component of the annual report. The commenter requested clarification of what information is required under the ''grievances and appeals'' component, and whether the reference is intended to mean appeals under 42 CFR part 431, subpart E and/or 42 CFR part 438, subpart F relating to the waivers and expenditure authorities granted as part of the demonstration project.

Response: The State should provide a summary of the types of grievances and appeals, and include any trends discovered, the resolution of the grievances and appeals, and any actions

taken, or to be taken, to prevent other occurrences.

Comment: Several commenters requested clarification regarding CMS' intent to require the State to publish draft annual reports on its Web site. One commenter recommended that CMS remove this requirement from the final regulation, and only require the State to publish a final annual report.

Response: The overarching goal of this regulation is to increase the degree to which information about section 1115 demonstrations is publicly available. By requiring the State to publish the draft annual report on its Web site, we believe this requirement is in line with the goal of this final rule.

Comment: One commenter expressed concern over conducting annual beneficiary satisfaction surveys as they are costly and time consuming. The commenter requested that CMS consider biannual member satisfaction surveys.

Response: While we did not specifically request an annual beneficiary satisfaction survey, we have clarified the language regarding this requirement. An annual survey is not required.

Comment: Many commenters recommended that CMS post the State's annual report on its Web site.

Response: The State's annual report will be included in the administrative record as outlined in § 431.416(f). We will also provide a link to the State's public Web site to assure public access to the State's annual report.

Comment: One commenter requested that CMS specify a timeframe for it to provide comments on the annual report.

Response: Given the complex and individual nature of each demonstration application, we do not have a specified timeframe for review.

Comment: One commenter expressed concern about the lack of flexibility for annual recordkeeping and reporting, as well as the discrepancies in timeframes between existing STCs and this rule.

Response: We have revised the language to clarify that States may also follow the timeframes for submitting their annual reports as specified in their STCs.

Comment: One commenter requested that CMS remove quality as a distinct requirement in the annual report.

Response: We are committed to ensuring that Medicaid beneficiaries receive quality care, and as such, believe the current quality reporting requirements are in line with our commitment to quality care.

I. General Comments

1. Demonstration Amendments

Comment: Several of the commenters requested clarification on whether the regulation would apply to section 1115 demonstration amendments. One commenter suggested that if the regulation did apply to amendments, CMS should establish a threshold for the types of changes that would require public notice.

Response: This regulation and the statutory changes that it implements, do not address section 1115 demonstration amendments. We will provide further guidance in a separate issuance on when a State must solicit public input on demonstration amendments, including whether a demonstration amendment would result in a new demonstration project.

Comment: One commenter recommended that CMS require advance notice and opportunity for public comment if the State proposes substantive changes to an approved waiver demonstration.

Response: While we appreciate the commenter's concern for additional public notice on demonstration amendments, this regulation does not apply to section 1115 demonstration amendments.

2. American Recovery and Reinvestment Act (ARRA)

Comment: The commenter requested additional regulatory action to codify section 5006(e) of ARRA for all Medicaid and CHIP policy changes.

Response: We have addressed the requirements in section 5006(e) of ARRA to seek advice from Indian health providers and urban Indian organizations for section 1115 demonstrations, but the overall implementation of consultation requirements is beyond the scope of this rulemaking document, and therefore, we are not addressing it in this final rule. Regardless, the ARRA provides States appropriate flexibility in the methods they choose to use, as is appropriate given the wide array of situations among the States where there are Federally-recognized tribes, Indian health providers, or urban Indian organizations.

3. Current CMS Web Site

Comment: Several commenters requested that CMS provide the public with more information on its Web site about section 1115 demonstrations that are currently being considered for extensions and new section 1115 demonstrations that have been submitted.

Response: We appreciate the commenters' suggestion, and are reviewing our current Web site operating procedures to ensure we meet the requirements of the regulation.

4. Operational Protocols

Comment: One commenter expressed concern that the public will not be able to comment on operational protocols as these are sometimes used to make significant changes to the demonstration. The commenter requested that CMS provide the public opportunity to comment on these protocols should it allow states to make changes to the demonstration through the submission of these protocols.

Response: We no longer require States to submit operational protocols; it is our current practice to include all operational requirements in the special terms and conditions upon which approval of the demonstration project is contingent. Therefore, this comment is beyond the scope of this rulemaking.

5. General/Unrelated

Comment: While several commenters expressed support for the proposed regulation, several others expressed concern that the regulation would be too cumbersome by requiring additional staff time and resources, which are under considerable strain due to current State fiscal pressures.

Response: One of the goals of this regulation is to balance the need for transparency with respect to administrative burden. While we understand the commenters' concerns regarding the additional staff time and resources, we believe that this regulation strikes an appropriate balance between transparency and administrative burden by providing the State with flexibility in the manner in which it publishes its public notice, as well as the venues it selects to hold the public hearings. In addition, by making public documents available on the Web, States and the Federal Government are likely to have fewer requests for public documents, and therefore, can expect a reduction in staff time devoted to such activities.

Comment: One commenter recommended that CMS grandfather operational section 1115 demonstrations that were in place prior to the issuance of these regulations, and only require them to comply with the new regulation upon renewal.

Response: We intend to apply the procedural requirements in these regulations to extensions of current operational section 1115 demonstrations, and would not require States with current operational 1115

demonstrations to meet public process requirements prior to the next extension.

Comment: Several commenters provided instances where there were typographical or referencing errors in the proposed rule.

Response: We agree with these comments, and have made the appropriate changes to the final rule.

Comment: One commenter urged that CMS apply the principles of this regulation to Medicare demonstrations.

Response: This comment is beyond the scope of this rulemaking document, and therefore, we are not addressing it in this final rule.

Comment: One commenter recommended that the Department of Health and Human Services should align procedures for public notice and comment as required by the section 1332(a)(4)(B) of the Affordable Care Act.

Response: Section 1332(a)(5) of the Affordable Care Act requires coordination of the application process for demonstration projects under that section with the existing application process under section 1115 (and certain other waiver authorities).

Comment: One commenter urged that CMS apply the principles of this regulation to State Plan Amendment approvals.

Response: This comment is beyond both the scope of this rulemaking document and statute, and therefore, we are not addressing in this final rule. Moreover, the review of State plan amendments is entirely different than the review of a proposed demonstration. Approval of State plan amendments that comply with the regulatory framework is non-discretionary and there is a regulatory timeframe for federal review. In contrast, approval of section 1115 demonstration projects, including the timeframe, is discretionary with the Secretary.

III. Provisions of the Final Regulations

For the most part, this final rule incorporates the provisions of the proposed rule. Those provisions of this final rule that differ from the proposed rule are as follows:

A. Coordination With Section 1332 Waivers (§ 431.402)

We have deleted this provision from the final rule, but we plan to work closely with the States considering submitting multiple waivers to promote coordination across them to meet a State's specific circumstances and minimize administrative complexity while ensuring that the integrity of the review and approval processes is maintained.

B. Definitions (§ 431.404)

We have added the definition of ''Indian Health Program'' to make it consistent with the definition found in the Indian Health Care Improvement Act.

C. State Public Notice Process (§ 431.408)

We have amended § 431.408(a)(1)(i) to clarify that a demonstration application or extension request contains sufficient level of detail to ensure meaningful input from the public.

We have further clarified in § 431.408(a)(1)(i)(C) that a financial analysis of changes to the demonstration must be included in a demonstration extension request.

We have added § 431.408(a)(1)(i)(E) requiring the State to include in its public notice specific waiver and expenditure authorities that the State believes to be necessary to authorize the demonstration.

We have amended § 431.408(a)(1)(iii) clarifying that comments need only be accepted by the State within a minimum 30-day time period.

We have amended § 431.408(a)(2)(i) requiring the State to include a link to relevant Medicaid demonstration page(s) on the CMS Web site on its Web site, and have clarified language that the State may publish an abbreviated notice in a newspaper or the State's Register.

We have clarified in § 431.408(a)(2)(ii) that the State must also publish an abbreviated public notice which must include a summary description of the demonstration, the location and times of the two public hearings, and an active link to the full public notice document on the State's Web site in either the State's Administrative Record or significant newspaper. We have amended language requiring the State to publish its notice in the newspaper of widest circulation in each city with a population of 100,000 or more. We have added § 431.408(a)(2)(iii) requiring the State to utilize a mechanism, such as an electronic mailing list, to notify interested parties of a demonstration application in addition to publishing an abbreviated public notice in either the State's Administrative Record or significant newspapers.

We have amended § 431.408(a)(3) to clarify that the two public hearings must be held on separate dates and at separate locations, and must provide the public throughout the State an opportunity to provide comments. We further clarify that the State must use telephonic and/or Web conference capabilities for at least one public hearing to ensure statewide accessibility to the hearing unless it can document that it has met this requirement.

We have added a technical amendment to § 431.408(a)(3)(i) revising the CFR citation that governs the Medical Care Advisory Committee to read ''§ 431.12.''

We have amended language in § 431.408(b)(1) to clarify that, for a new demonstration project, or an extension of an existing demonstration, that has or would have a direct effect on tribes, Indians, Indian health programs, or urban Indian health organizations, the State must undertake a consultation process with Tribes and seek advice from affected Indian health providers and urban Indian health organizations that includes advance notice of the application with the anticipated effect on tribes and Indian health providers, and an opportunity for input in a timeframe that allows adequate time for State consideration of any issues raised. This process should be consistent with the guidance set forth in the State Medicaid Director Letter dated July 17, 2001 (#01–024) unless the State has a different established policy with the tribes and/or a different process for seeking advice from the Indian health providers and urban Indian organizations any State process under its approved Medicaid State plan.

We have revised, in § 431.408(b)(3), the term ''a renewal of a previously approved demonstration project'' to read ''an extension of an existing demonstration project.''

D. Application Procedures (§ 431.412)

We have amended language in § 431.412(a)(1)(viii) deleting the word ''key'' as well as clarifying that the State must provide written evidence on how it considered public comments when developing the demonstration application.

To ensure flexibility, we have deleted specific reference to ''Section 508 of the American with Disabilities Act'' and substituted language requiring that State submissions be in formats that are accessible to individuals with disabilities.

We have added a new § 431.412(a)(3) to clarify that this section does not preclude a State from submitting a pre-application concept paper to CMS or from conferring with CMS about its intent to seek a demonstration prior to submitting a completed application.

We have amended § 431.412(b)(1) to clarify that we will include the date in which the Secretary received the State's demonstration application in the written notice informing the State receipt of the submitted application.

We have amended § 431.412(c) to clarify that States must submit an extension request 12 months prior to the expiration date of a demonstration when requesting an extension under section 1115(e) of the Act or 6 months prior to the expiration date of a demonstration when requesting an extension under section 1115(a) or (f) of the Act, unless a longer time frame is specified in the Special Terms and Conditions for the original demonstration.

We have revised § 431.412(c)(2)(iv) to include the CMS 416 EPSDT/CHIP report as an example of other documentation regarding access to care, in its extension request.

We have revised § 431.412(c)(2)(vii) deleting the word ''key'' as well as clarifying that the State must provide written evidence on how it considered public comments when developing the demonstration application.

We have added a new § 431.412(c)(4) clarifying that the Secretary may extend an existing demonstration project on a temporary basis for the period during which a successor demonstration is under review, without regard to the date when the application was submitted.

E. Federal Public Notice and Approval Process (§ 431.416)

We have amended § 431.416(a)(i) to clarify that we will include the State's official demonstration application submission date received by the Secretary in the written notice informing the State of receipt of the submitted application. We will also publish the written notice on our Web site within the 15-day timeframe.

We have amended § 431.416(d) to clarify that we will publish all written comments.

We have amended § 431.416(f)(2) to clarify that we will publish the administrative record on our Web site, or provide a link to the State's public Web site to ensure public access to all demonstration documents.

We have added another administrative record element in the new paragraph § 431.416(f)(1)(ii) to include the State's disaster exception request, the CMS' response letter, and revised public notice timeline, if applicable.

We have clarified in § 431.416(f)(1)(iii) that written public comments will be included in the administrative record.

We have added another administrative record element in § 431.416(f)(1)(vi) to include any written request(s) for additional information that CMS sends to the State.

We have clarified in § 431.416(f)(1)(v) that if an application is approved, the final State response to written CMS requests for additional information will be included in the administrative record.

We have added § 431.416(f)(1)(vi) to include the disapproval letter sent to the State should its application be denied.

We added in § 431.416(f)(1)(vii) the phrase ''as applicable.''

We have clarified § 431.416(f)(1)(viii) to include specific requirements related to the approved and agreed upon terms and conditions, such as implementation reviews, evaluation design, quarterly progress reports, annual reports, and interim and/or final evaluation reports.

We have added another administrative record element in § 431.416(f)(1)(ix) to include any applicable notices of the demonstration's suspension or termination.

We have added § 431.416 paragraph (f)(2) to clarify that we will provide a link to the State's public Web site to ensure the public has access to all demonstration related documentation.

We have revised, in § 431.416(g), the term ''demonstration renewal'' to read ''demonstration extension request.'' We have also deleted the term ''economic'' from § 431.416(g).

We have revised § 431.416(g)(i) to read ''The State acted in good faith, and in a diligent, timely, and prudent manner.''

F. Monitoring and Compliance (§ 431.420)

We have amended § 431.420(a)(1) to delete ''policy statement'' and change ''policy'' to ''guidance.''

We have amended § 431.420(a)(2) to clarify that the States must comply with the terms and conditions set forth by the Secretary, and to make the paragraph more consistent with § 431.420(d).

We have added § 431.420(b)(3) clarifying that we will promptly share with the State complaints that it has received, and that we will notify the State of any applicable monitoring and compliance issues.

We have amended § 431.420(c) to clarify that the public forum must allow the public an opportunity to provide comments, as well as to require the State to include a summary report of the public forum in the quarterly report associated with the quarter in which the forum was held. We also clarify that the public forum must be held within 6 months after the demonstration's implementation date.

We have amended § 431.420(c)(1)(i) revising the CFR citation that governs the Medical Care Advisory Committee to read § 431.12.

We have amended § 431.420(d) to clarify that the Secretary may suspend or terminate a demonstration, and that the Secretary may also withdraw waivers or expenditures authorities based on a finding that demonstration project is not likely to achieve the statutory purposes.

G. Evaluation Requirements (§ 431.424)

We have revised § 431.424(b)(2) requiring the State to ensure that the evaluation process protects beneficiary privacy.

We have amended § 431.424(c)(1) requiring the State to publish its evaluation design plan on its Web site within 30 days of CMS approval.

We have amended § 431.424(d) requiring the State to publish its evaluations on its Web site within 30 days of submission to CMS.

We have clarified in § 431.424(g) that we will post all evaluation materials, or provide a link to the State's public Web site, within 30 days of receipt.

H. Reporting Requirements (§ 431.428)

We have amended § 431.428(a)(2) to include that any issues and/or complaints made by beneficiaries must be included in the annual report.

We have amended § 431.428(a)(5) to clarify that the results of beneficiary satisfaction survey, if conducted during the reporting year, should be included in the annual report.

We have amended § 431.428(b) requiring the State to publish its draft annual report on its public Web site within 30 days of submission to CMS.

We have amended § 431.428(b)(2) requiring the State to publish its final annual report on its Web site within 30 days of approval by CMS.

IV. Collection of Information Requirements

Under the Paperwork Reduction Act of 1995, we are required to provide 30-day notice in the **Federal Register** and solicit public comment before a collection of information requirement is submitted to the Office of Management and Budget (OMB) for review and approval. In order to fairly evaluate whether an information collection should be approved by OMB, section 3506(c)(2)(A) of the Paperwork Reduction Act of 1995 requires that we solicit comment on the following issues:

- The need for the information collection and its usefulness in carrying out the proper functions of our agency.
- The accuracy of our estimate of the information collection burden.
- The quality, utility, and clarity of the information to be collected.
- Recommendations to minimize the information collection burden on the

affected public, including automated collection techniques.

A. ICRs Regarding State Public Notice Process (§ 431.408)

Section 431.408 provides for a State to provide a public notice and comment period regarding applications for a demonstration project, or an extension of an existing demonstration project the State intends to submit to CMS for review and consideration. Section 431.408(a)(1) specifies that prior to submitting an application to CMS for a new demonstration project, or an extension of an existing demonstration project, the State must provide public notice, and a comment period for at least 30 days. The public notice must address the information requirements listed at § 431.408(a)(1)(i) through (iv).

The burden estimate associated with this requirement is the time and effort necessary to develop and publish notice with a comment period that complies with the aforementioned information requirements. We estimate that, on average, each of the 15 States submitting applications for new demonstration projects, and extension of a previously approved demonstration project will require 80 hours to comply with the requirements in this section. The estimated annual burden associated with this section is 1200 hours at a cost of $120,000.

Section 431.408(a)(2) provides that States establish and maintain a readily identifiable link to a demonstration Web page on the public Web site of the State agency responsible for making applications for demonstrations, and provide a link to the appropriate demonstration Web page on the CMS Web site. The State public notice must appear in a prominent location on the demonstration Web page of the State's public Web site throughout the entire review process; and the public notice must appear in at least one of the publications listed in § 431.408(a)(2)(i) and (ii).

The burden associated with this is the time and effort necessary to develop a notice and to publish it both on the Web site for State agency responsible for submitting demonstration applications and in at least one of the publications listed in § 431.408(a)(2)(i) and (ii). While these requirements are subject to the PRA, we believe we addressed the burden estimates in our discussion of § 431.408(a)(1).

Section 431.408(a)(3) requires that at least 20 days prior to submitting an application for new demonstration projects, or an extension of a previously approved demonstration project to CMS for review, the State must have conducted at least two public hearings regarding the State's demonstration application using at least two of the following public forums contained in this section. The two public hearings must be held on separate dates and in separate locations, and must afford the public an opportunity to provide comments. Additionally, the State must utilize teleconferencing or Web capabilities for at least one of the public hearings to ensure statewide accessibility. The burden associated with this is the time and effort necessary for a State to conduct at least two public hearings 20 days prior to submitting an application for a demonstration. While this requirement is subject to the PRA, we believe the associated burden is exempt under 5 CFR 1320.3(h)(4). Facts or opinions submitted in response to general solicitations of comments from the public, published in the **Federal Register** or other publications, regardless of the form or format thereof, provided that no person is required to supply specific information pertaining to the commenter, other than that necessary for self-identification, as a condition of the agency's full consideration of the comment are not subject to the PRA.

Section 431.408(b) requires States with Federally-recognized Indian tribes, Indian health programs, urban Indian health organizations or all three of the aforementioned entities, to consult with the Indian tribes, and seek advice from Indian Health programs and urban Indian health organizations in the State, before submitting a demonstration application that has direct effects on Indians and/or these entities and organizations. Section 431.408(b)(2) specifies that consultation activities must be conducted in a manner consistent with the State Medicaid Director Letter #01–024 regarding consultation with tribes and the approved State Plan Amendments for seeking advice from Indian health providers and urban Indian organizations. Section 431.408(b)(3) further specifies that when there is a direct effect on Indians, Indian tribes, Indian health providers or urban Indian organizations, the State must submit evidence to CMS that these requirements have been met. Section 431.408(b)(4) explains that documentation of the State's consultation activities must be included in the demonstration application, which must describe the notification process, the entities they sought advice from or consulted with, the date and location of these consultation or how advice was sought, issues raised, and the potential resolution for such issues.

The burden associated with the requirements in this section is both the time and effort necessary for a State to seek advice and/or conduct its tribal consultations and the time and effort necessary to notify CMS of the State's compliance with § 431.408(b). We estimate that this requirement applies to 37 States but that no more than, on average, 15 States would be subject to this requirement in a given year. We further estimate that it will take each State a total of 40 hours to both conduct its tribal consultations, and seek advice from Indian health programs and urban Indian health organizations prior to submitting an application for a new demonstration project, or an extension of an existing demonstration project and to submit the aforementioned evidence to CMS. The estimated annual burden associated with these requirements is 600 hours at a cost of $60,000.

B. ICRs Regarding Application Procedures (§ 431.412)

Section 431.412(a) discusses the application process for Medicaid demonstration projects. A State's application for approval of a new demonstration project or an extension of an existing demonstration project must be submitted to CMS as both printed and electronic documents. Electronic documents should be in formats accessible to individuals with disabilities. Section 431.412(b) further explains that applications for the initial approval of a demonstration will not be considered complete if they do not comply with the requirements contained at § 431.412(b) and § 431.408.

The burden associated with the requirements in § 431.412 is the time and effort necessary for a State to develop and submit a complete initial application for a demonstration. We estimate that we will receive, on average, five applications annually. Similarly we estimate that it will take 400 hours for a State to develop and submit a complete demonstration application. The total estimated annual burden associated with the requirements in § 431.412(b) is 2000 hours at a cost of $200,000.

Section 431.412(c) specifies that a State must submit a request to extend an existing demonstration under section 1115(e) of the Act at least 12 months prior to the expiration date of the demonstration or 6 months prior to the expiration date of the demonstration when requesting an extension under section 1115(a) or (f) of the Act, unless a longer time frame is specified in the Special Terms and Conditions for the

original demonstration. An extension application, including an extension for the purpose of phasing out a demonstration, must be sent from the Governor of the State to the Secretary. Section 431.412(c)(2) further specifies that an application to extend an existing demonstration will be considered complete when the State provides the required information listed at § 431.412(c)(2)(i) through (vii). The burden associated with the requirements in § 431.412(c) is the time and effort necessary for a State to develop and submit a demonstration extension application. CMS estimates that, on average, 10 States will apply for extensions annually. We further estimate that it will take each State approximately 320 hours to develop and submit a demonstration extension application. The total estimated annual burden is 3200 hours at a cost of $320,000.

C. ICRs Regarding Monitoring and Compliance (§ 431.420)

According to Section 431.420(b), States will periodically perform reviews of the implementation of the demonstration. We estimate that it will take each State 80 hours annually to periodically review the demonstration's implementation. We also estimate that, on average, 15 States must comply with this requirement. The total estimated annual burden associated with this requirement is 1200 hours at a cost of $120,000.

Section 431.420(c) states that at least 6 months after the implementation date of the demonstration and annually thereafter, the State must hold a public forum to solicit comments on the progress of a demonstration project. Section 431.420(c)(3)(i) through (iii) further specifies that the public forum to solicit feedback on the progress of a demonstration project, must occur at a Medical Care Advisory Committee, or a commission, or other similar process, where meetings are open to members of the public, and would afford an interested party the opportunity to learn about and comment on the demonstration's progress. Additionally, as stated in § 431.420(c)(3)(iii), the State must publish the date, time, and location of the public forum in a prominent location on the State's public Web site, at least 30 days prior to the date of the planned public forum.

The burden associated with these provisions includes the time and effort necessary to conduct public meeting and the time and effort necessary for a State to publish the date, time, and location of the public forum in a prominent location on the State's public Web site, at least 30 days prior to the date of the planned public forum. While these requirements are subject to the PRA, we believe the associated burden is exempt from the PRA. As discussed previously in this final rule, facts or opinions submitted in response to general solicitations of comments from the public, published in the **Federal Register** or other publications, regardless of the form or format thereof, provided that no person is required to supply specific information pertaining to the commenter, other than that necessary for self-identification, as a condition of the agency's full consideration of the comment are not subject to the PRA. Therefore, the burden associated with the annual public hearing requirement is exempt. Similarly, we believe the time and effort necessary to a State to publish the date, time, and location of the public forum in a prominent location on the State's public Web site is a burden that would be incurred in the course of usual and customary State business practices and is therefore exempt from the PRA under 5 CFR 1320.3(b)(3).

D. ICRs Regarding Evaluation Requirements (§ 431.424)

As required in § 431.424(c)(1), simultaneous to receiving CMS' approval of a new demonstration project, or a extension of a previously existing demonstration project, the State must receive CMS approval of a design for an evaluation of the demonstration project and publish this document to the State's public Web site within 30 days of submission to CMS. The draft evaluation must include information established in § 431.424(c)(2). The burden associated with this requirement is the time and effort necessary to design an evaluation for a new demonstration. We estimate that it will take each State 160 hours to develop an evaluation. Similarly, we estimate that, on average, 15 States must comply with this requirement. We further estimate that the total estimated annual burden associated with this requirement is 2,400 hours at a cost of $240,000.

Section 431.424(d) specifies that in the event that the State requests to extend the demonstration beyond the current approval period under the authority of section 1115(a), (e), or (f) of the Act, the State must submit an interim evaluation report as part of the State's request for a subsequent extension of the demonstration. The burden associated with this is the time and effort necessary for a State to develop and submit an interim evaluation report. We estimate that each State will take 160 hours to comply with this requirement. Similarly, we estimate that, on average, 10 States must comply with this requirement. We further estimate that the total estimated annual burden associated with this requirement is 1,600 hours at a cost of $160,000.

Section 431.424(e) established that States will publish CMS-approved demonstration evaluation designs on their State public Web site within 30 days of CMS approval. We estimate that it will take 70 hours for each State to comply with this disclosure process. We further estimate that, on average, 15 States must comply with this provision. We further estimate that the total estimated annual burden associated with this requirement is 1,050 hours at a cost of $105,000.

E. ICRs Regarding Reporting Requirements (§ 431.428)

Section 431.428 establishes that States will submit annual reports to CMS documenting the information listed in § 431.428(a) (1) through (11). As part of the submission process, § 431.428(b) requires States to submit draft annual reports to CMS no later than 90 days after the end of each demonstration year. The burden associated with this reporting requirement is the time and effort necessary to submit draft annual reports to CMS. We estimate that, on average, 15 States must comply with this. We estimate that it will take 40 hours for each State to comply with this reporting requirement. We further estimate that the total estimated annual burden associated with this requirement is 600 hours at a cost of $60,000.

In § 431.428(b)(1) establishes that within 60 days of receipt of comments from CMS, the State must submit to CMS the final annual report for the demonstration year. While this requirement is subject to the PRA, we believe the associated burden is exempt under 5 CFR 1320.3(h)(9). Facts or opinions obtained or solicited through non-standardized follow-up questions designed to clarify responses to approved collections of information are not subject to the PRA.

Section § 431.428(b)(2) states that the draft and final annual reports must be published on the State's public Web site within 30 days of submission and approval to CMS, respectively. The burden associated with this is the time and effort it takes for a State to post the aforementioned information on the State's public Web site. We estimate that, on average, each of the 15 States will require 4 hours to comply with this requirement. The total estimated annual burden associated with this requirement is 60 hours at a cost of $6,000.

TABLE 1—ESTIMATED ANNUAL RECORDKEEPING AND REPORTING BURDEN

Regulation section(s)	OMB Control No.	Respondents	Responses	Burden per response (hours)	Total annual burden (hours)	Hourly labor cost of reporting ($)	Total labor cost of reporting ($)	Total capital/ maintenance costs ($)	Total cost ($)
§ 431.408(a)(1)	0938–New	15	1	80	1,200	100	120,000	0	120,000
§ 431.408(b)	0938–New	15	1	40	600	100	60,000	0	60,000
§ 431.412(a) & (b)	0938–New	5	1	400	2,000	100	200,000	0	200,000
§ 431.412(c)	0938–New	10	1	320	3,200	100	320,000	0	320,000
§ 431.420	0938–New	15	1	80	1,200	100	120,000	0	120,000
§ 431.424(c)	0938–New	15	1	160	2,400	100	240,000	0	240,000
§ 431.424(d)	0938–New	10	1	160	1,600	100	160,000	0	160,000
§ 431.424(e)	0938–New	15	1	70	1,050	100	105,000	0	105,000
§ 431.428(b)	0938–New	15	1	40	600	100	60,000	0	60,000
§ 431.428(b)(2)	0938–New	15	1	4	60	100	6,000	0	6,000
Total		130	10		13,910		1,391,000		1,391,000

If you comment on these information collection and recordkeeping requirements, please submit your comments to the Office of Information and Regulatory Affairs, Office of Management and Budget, Attention: CMS Desk Officer, [CMS–2325–F], Fax: (202) 395–6974; or Email: *OIRA_submission@omb.eop.gov.*

V. Regulatory Impact Statement

A. Statement of Need

Under Executive Order 12866 (58 FR 51735), a Federal agency should publish only such regulations as are required by law, are necessary to interpret the law, or are made necessary by compelling need. This final rule implements statutorily required provisions of section 10201(i) of the Affordable Care Act, and of section 5006 of the American Recovery and Investment Act. This final rule will increase the degree to which information about Medicaid and CHIP demonstration applications and approved demonstration projects is publicly available and promote greater transparency in the review and approval of demonstrations.

B. Overall Impact

We have examined the impact of this rule as required by Executive Order 13563 on Improving Regulation and Regulatory Review (January 18, 2011), Executive Order 12866 on Regulatory Planning and Review (September 1993), the Regulatory Flexibility Act (RFA) (September 19, 1980, Pub. L. 96–354), section 1102(b) of the Act, section 202 of the Unfunded Mandates Reform Act of 1995 (Pub. L. 104–4), Executive Order 13132 on Federalism (August 4, 1999), and the Congressional Review Act (5 U.S.C. 804(2)).

Executive Orders 13563 and 12866 direct agencies to assess all costs and benefits of available regulatory alternatives and, if regulation is necessary, to select regulatory approaches that maximize net benefits (including potential economic, environmental, public health and safety effects, distributive impacts, and equity). We believe that the total costs of this rule, including information collection costs, will be at least several million dollars annually, but are unlikely to exceed ten million dollars annually. Therefore, this rule does not reach the economic threshold and thus is not considered a major rule.

The RFA requires agencies to analyze options for regulatory relief for small entities, if a rule has a significant impact on a substantial number of small entities. For purposes of the RFA, small entities include small businesses, nonprofit organizations, and small governmental jurisdictions. Individuals and States are not included in the definition of a small entity. We are not preparing an analysis for the RFA because we have determined, and the Secretary certifies, that this final rule will not have a significant impact on a substantial number of small entities.

In addition, section 1102(b) of the Act requires us to prepare a regulatory impact analysis, if a rule may have a significant impact on the operations of a substantial number of small rural hospitals. This analysis must conform to the provisions of section 604 of the RFA. For purposes of section 1102(b) of the Act, we define a small rural hospital as a hospital that is located outside of Core-Based Statistical Area (for Medicaid) and outside of a Metropolitan Statistical Area (for Medicare) and has fewer than 100 beds. We are not preparing an analysis for section 1102(b) of the Act because we have determined, and the Secretary certifies, that this final rule will not have a significant impact on the operations of a substantial number of small rural hospitals.

Section 202 of the Unfunded Mandates Reform Act of 1995 (UMRA) (Pub. L. 104–4) also requires that agencies assess anticipated costs and benefits before issuing any rule whose mandates require spending in any 1 year of $100 million in 1995 dollars, updated annually for inflation. In 2011, that threshold is approximately $136 million. Because this rule does not mandate State participation in using section 1115 demonstrations, there is no obligation for the State to make any change to their existing programs. As a result, there is no mandate for the State. Therefore, we estimate this rule will not mandate expenditures in the threshold amount of $136 million in any 1 year.

Executive Order 13132 establishes certain requirements that an agency must meet when it promulgates a proposed rule (and subsequent final rule) that imposes substantial direct requirement costs on State and local governments, preempts State law, or otherwise has Federalism implications. This rule will not have a substantial direct effect on State or local governments, preempt States, or otherwise have a Federalism implication. We have sought in this rule to respect State's own processes for notifying the public of important policy changes and for obtaining public comment.

In accordance with the provisions of Executive Order 12866, this regulation was reviewed by the Office of Management and Budget.

List of Subjects in 42 CFR Part 431

Grant programs—health, Health facilities, Medicaid, Privacy, Reporting and recordkeeping requirements.

For the reasons set forth in the preamble, the Centers for Medicare & Medicaid Services amends 42 CFR chapter IV as set forth below:

PART 431—STATE ORGANIZATION AND GENERAL ADMINISTRATION

■ 1. The authority citation for part 431 continues to read as follows:

Authority: Sec. 1102 of the Social Security Act, (42 U.S.C. 1302).

■ 2. Subpart G is added to part 431 to read as follows:

Subpart G—Section 1115 Demonstrations

Sec.
431.400 Basis and purpose.
431.404 Definitions.
431.408 State public notice process.
431.412 Application procedures.
431.416 Federal public notice and approval process.
431.420 Monitoring and compliance.
431.424 Evaluation requirements.
431.428 Reporting requirements.

Subpart G—Section 1115 Demonstrations

§ 431.400 Basis and purpose.

(a) *Basis.* This subpart implements provisions in section 1115(d) of the Act, which requires all of the following:

(1) The establishment of application requirements for Medicaid and CHIP demonstration projects that provide for:

(i) A process for public notice and comment at the State level, including public hearings, sufficient to ensure a meaningful level of public input and that does not impose requirements that are in addition to, or duplicative of, requirements imposed under the Administrative Procedure Act, or requirements that are unreasonable or unnecessarily burdensome with respect to State compliance.

(ii) Requirements relating to all of the following:

(A) The goals of the program to be implemented or renewed under the demonstration project.

(B) Expected State and Federal costs and coverage projections of the State demonstration project.

(C) Specific plans of the State to ensure the demonstration project will be in compliance with titles XIX or XXI of the Act.

(2) A process for public notice and comment after a demonstration application is received by the Secretary that is sufficient to ensure a meaningful level of public input.

(3) A process for the submission of reports to the Secretary by a State relating to the implementation of a demonstration project.

(4) Periodic evaluation of demonstration projects by the Secretary.

(b) *Purpose.* This subpart sets forth a process for application and review of Medicaid and CHIP demonstration projects that provides for transparency and public participation.

§ 431.404 Definitions.

For the purposes of this subpart:

Demonstration means any experimental, pilot, or demonstration project which the Secretary approves under the authority of section 1115 of the Act because, in the judgment of the Secretary, it is likely to assist in promoting the statutory objectives of the Medicaid or CHIP program.

Indian Health Program means a program as defined at section 4(12) of the Indian Health Care Improvement Act, (Pub. L. 94–437).

Public notice means a notice issued by a government agency or legislative body that contains sufficient detail to notify the public at large of a proposed action, consistent with the provisions of § 431.408 of this subpart.

§ 431.408 State public notice process.

(a) *General.* A State must provide at least a 30-day public notice and comment period regarding applications for a demonstration project, or an extension of an existing demonstration project that the State intends to submit to CMS for review and consideration.

(1) *Public notice and comment period.* Prior to submitting an application to CMS for a new demonstration project or an extension of a previously approved demonstration project, the State must provide at least a 30-day public notice and comment period, and the public notice shall include all of the following information:

(i) A comprehensive description of the demonstration application or extension to be submitted to CMS that contains a sufficient level of detail to ensure meaningful input from the public, including:

(A) The program description, goals, and objectives to be implemented or extended under the demonstration project, including a description of the current or new beneficiaries who will be impacted by the demonstration.

(B) To the extent applicable, the proposed health care delivery system and the eligibility requirements, benefit coverage and cost sharing (premiums, co-payments, and deductibles) required of individuals that will be impacted by the demonstration, and how such provisions vary from the State's current program features.

(C) An estimate of the expected increase or decrease in annual enrollment, and in annual aggregate expenditures, including historic enrollment or budgetary data, if applicable. This includes a financial analysis of any changes to the demonstration requested by the State in its extension request.

(D) The hypothesis and evaluation parameters of the demonstration.

(E) The specific waiver and expenditure authorities that the State believes to be necessary to authorize the demonstration.

(ii) The locations and Internet address where copies of the demonstration application are available for public review and comment.

(iii) Postal and Internet email addresses where written comments may be sent and reviewed by the public, and the minimum 30-day time period in which comments will be accepted.

(iv) The location, date, and time of at least two public hearings convened by the State to seek public input on the demonstration application.

(2) *Statement of public notice and public input procedures.* (i) The State shall publish its public notice process, public input process, planned hearings, the demonstration application(s), and a link to the relevant Medicaid demonstration page(s) on the CMS Web site in a prominent location on either the main page of the public Web site of the State agency responsible for making applications for demonstrations or on a demonstration-specific Web page that is linked in a readily identifiable way to the main page of the State agency's Web site. The State must maintain and keep current the public Web site throughout the entire public comment and review process.

(ii) The State shall also publish an abbreviated public notice which must include a summary description of the demonstration, the location and times of the two or more public hearings, and an active link to the full public notice document on the State's Web site in the State's administrative record in accordance with the State's Administrative Procedure Act, provided that such notice is provided at least 30 days prior to the submission of the demonstration application to CMS or in the newspapers of widest circulation in each city with a population of 100,000, or more, provided that such notice is provided at least 30 days prior to the submission of the demonstration application to CMS, or both.

(iii) The State must also utilize additional mechanisms, such as an electronic mailing list, to notify interested parties of the demonstration application(s).

(3) *Public hearings.* At least 20 days prior to submitting an application for a new demonstration project or extension of an existing demonstration project to CMS for review, the State must have conducted at least two public hearings, on separate dates and at separate locations, regarding the State's demonstration application at which members of the public throughout the State have an opportunity to provide comments. The State must use telephonic and/or Web conference capabilities for at least one of the two

required public hearings to ensure statewide accessibility to the public hearing unless it can document it has afforded the public throughout the State the opportunity to provide comment, such as holding the two public hearings in geographically distinct areas of the State. The State must use at least two of the following public forums:

(i) The Medical Care Advisory Committee that operates in accordance with § 431.12 of this subpart; or

(ii) A commission or other similar process, where meetings are open to members of the public; or

(iii) A State legislative process, which would afford an interested party the opportunity to learn about the contents of the demonstration application, and to comment on its contents; or

(iv) Any other similar process for public input that would afford an interested party the opportunity to learn about the contents of the demonstration application, and to comment on its contents.

(b) *Tribal consultation and seeking advice from Indian health providers and urban Indian organizations.* A State with Federally-recognized Indian tribes, Indian health programs, and/or urban Indian health organizations shall include a process to consult with the Indian tribes, and seek advice from Indian Health programs and urban Indian health organizations in the State, prior to submission of an application to CMS for a new demonstration project, or an extension of a previously approved demonstration project, that has or would have a direct effect on Indians, tribes, on Indian health programs, or on urban Indian health organizations.

(1) For initial applications and applications extending existing demonstration projects that have a direct effect on Indians, tribes, Indian health programs, and urban Indian health organizations in the State, the State must demonstrate that it has conducted consultation activities with tribes and sought advice from Indian health programs and urban Indian health organizations prior to submission of such application.

(2) Consultation with Federally-recognized Indian tribes and solicitation of advice from affected Indian health providers and urban Indian organizations must be conducted in accordance with the consultation process outlined in the July 17, 2001 letter or the State's formal tribal consultation agreement or process and the process for seeking advice from Indian Health providers must be conducted as outlined in the State's approved Medicaid State Plan.

(3) Documentation of the State's consultation activities must be included in the demonstration application, which must describe the notification process, the entities involved in the consultation(s), the date(s) and location(s) of the consultation(s), issues raised, and the potential resolution for such issues.

§ 431.412 Application procedures.

(a) *Initial demonstration application content.* (1) Applications for initial approval of a demonstration will not be considered complete unless they comply with the public notice process set forth in § 431.408(a) of this subpart, and include the following:

(i) A comprehensive program description of the demonstration, including the goals and objectives to be implemented under the demonstration project.

(ii) A description of the proposed health care delivery system, eligibility requirements, benefit coverage and cost sharing (premiums, copayments, and deductibles) required of individuals who will be impacted by the demonstration to the extent such provisions would vary from the State's current program features and the requirements of the Act.

(iii) An estimate of the expected increase or decrease in annual enrollment, and in annual aggregate expenditures, including historic enrollment or budgetary data, if applicable.

(iv) Current enrollment data, if applicable, and enrollment projections expected over the term of the demonstration for each category of beneficiary whose health care coverage is impacted by the demonstration.

(v) Other program features that the demonstration would modify in the State's Medicaid and CHIP programs.

(vi) The specific waiver and expenditure authorities that the State believes to be necessary to authorize the demonstration.

(vii) The research hypotheses that are related to the demonstration's proposed changes, goals, and objectives, a plan for testing the hypotheses in the context of an evaluation, and, if a quantitative evaluation design is feasible, the identification of appropriate evaluation indicators.

(viii) Written documentation of the State's compliance with the public notice requirements set forth in § 431.408 of this subpart, with a report of the issues raised by the public during the comment period, which shall be no less than 30 days, and how the State considered those comments when developing the demonstration application.

(2) CMS may request, or the State may propose application modifications, as well as additional information to aid in the review of the application. If an application modification substantially changes the original demonstration design, CMS may, at its discretion, direct an additional 30-day public comment period.

(3) This section does not preclude a State from submitting to CMS a pre-application concept paper or from conferring with CMS about its intent to seek a demonstration prior to submitting a completed application.

(b) *Demonstration application procedures.* A State application for approval of a new demonstration project or an extension of an existing demonstration project must be submitted to CMS as both printed and electronic documents. Electronic documents must be submitted in a format that will be accessible to individuals with disabilities.

(1) Consistent with § 431.416(a) of this subpart, within 15 days of receipt of a complete application, CMS will send the State a written notice informing the State of receipt of the submitted application, the date in which the Secretary received the State's demonstration application and the start date of the 30-day Federal public notice process set forth in § 431.416 of this subpart. The written notice—

(i) Is provided for purposes of initiating the Federal-level public comment period and does not preclude a determination that, based on further review, further information is required to supplement or support the application, or that the application cannot be approved because a required element is missing or insufficient.

(ii) Does not prevent a State from modifying its application or submitting any supplementary information it determines necessary to support CMS' review of its application.

(2) Within 15 days of receipt of a demonstration application that CMS determines is incomplete, CMS will send the State a written notice of the elements missing from the application.

(3) CMS will publish on its Web site at regular intervals the status of all State submissions, including information received from the State while the State works with CMS to meet the demonstration application process set forth in this section.

(c) *Demonstration extension request.* A request to extend an existing demonstration under sections 1115(a), (e), and (f) of the Act will be considered only if it is submitted at least 12 months

prior to the expiration date of the demonstration when requesting an extension under section 1115(e) of the Act or 6 months prior to the expiration date of the demonstration when requesting an extension under section 1115(a) or (f) of the Act, unless a longer time frame is specified in the Special Terms and Conditions for the original demonstration. An extension application, including an extension for the purpose of phasing out a demonstration, must be sent from the Governor of the State to the Secretary.

(1) *Changes to existing demonstration.* If an extension application includes substantial changes to the existing demonstration, CMS may, at its discretion, treat the application as an application for a new demonstration.

(2) *Demonstration extension application.* An application to extend an existing demonstration will be considered complete, for purposes of initiating the Federal-level public notice period, when the State provides the following:

(i) A historical narrative summary of the demonstration project, which includes the objectives set forth at the time the demonstration was approved, evidence of how these objectives have or have not been met, and the future goals of the program.

(ii) If changes are requested, a narrative of the changes being requested along with the objective of the change and the desired outcomes.

(iii) A list and programmatic description of the waivers and expenditure authorities that are being requested for the extension period, or a statement that the State is requesting the same waiver and expenditure authorities as those approved in the current demonstration.

(iv) Summaries of External Quality Review Organization (EQRO) reports, managed care organization (MCO) and State quality assurance monitoring, and any other documentation of the quality of and access to care provided under the demonstration, such as the CMS Form 416 EPSDT/CHIP report.

(v) Financial data demonstrating the State's historical and projected expenditures for the requested period of the extension, as well as cumulatively over the lifetime of the demonstration. This includes a financial analysis of changes to the demonstration requested by the State.

(vi) An evaluation report of the demonstration, inclusive of evaluation activities and findings to date, plans for evaluation activities during the extension period, and if changes are requested, identification of research hypotheses related to the changes and an evaluation design for addressing the proposed revisions.

(vii) Documentation of the State's compliance with the public notice process set forth in § 431.408 of this subpart, including the post-award public input process described in § 431.420(c) of this subpart, with a report of the issues raised by the public during the comment period and how the State considered the comments when developing the demonstration extension application.

(3) CMS may request, or the State may propose application modifications, as well as additional information to aid in the review of an application to extend a demonstration. If an application modification substantially changes the original demonstration design, CMS may, at its discretion, direct an additional 30-day public comment period.

(4) Upon application from the State, the Secretary may extend existing demonstration projects on a temporary basis for the period during which a successor demonstration is under review, without regard to the date when the application was submitted.

(d) *Approvals.* Approval of a new demonstration or a demonstration extension will generally be prospective only and Federal Financial Participation (FFP) will not be available for changes to the demonstration that have not been approved by CMS.

§ 431.416 Federal public notice and approval process.

(a) *General.* Within 15 days of receipt of a complete application from the State for a new demonstration project or an extension of a previously approved demonstration project, CMS will:

(1) Send the State a written notice informing the State of receipt of the demonstration application, the date in which the Secretary received the State's demonstration application, the start dates of the 30-day Federal public notice process, and the end date of the 45-day minimum Federal decision-making period.

(2) Publish the written notice acknowledging receipt of the State's completed application on its Web site within the same 15-day timeframe.

(b) *Public comment period.* Upon notifying a State of a completed application, CMS will solicit public comment regarding such demonstration application for 30 days by doing the following:

(1) Publishing the following on the CMS Web site:

(i) The written notice of CMS receipt of the State's complete demonstration application.

(ii) Demonstration applications, including supporting information submitted by the State as part of the complete application, and associated concept papers, as applicable.

(iii) The proposed effective date of the demonstration.

(iv) Addresses to which inquiries and comments from the public may be directed to CMS by mail or email.

(2) Notifying interested parties through a mechanism, such an electronic mailing list, that CMS will create for this purpose.

(c) *Public disclosure.* CMS will publish on its Web site, at regular intervals, appropriate information, which may include, but is not limited to the following:

(1) Relevant status update(s);

(2) A listing of the issues raised through the public notice process.

(d) *Publishing of comments.* (1) CMS will publish written comments electronically through its Web site or an alternative Web site.

(2) CMS will review and consider all comments received by the deadline, but will not provide written responses to public comments. While comments may be submitted after the deadline, CMS cannot assure that these comments will be considered.

(e) *Approval of a demonstration application.* (1) CMS will not render a final decision on a demonstration application until at least 45 days after notice of receipt of a completed application, to receive and consider public comments.

(2) CMS may expedite this process under the exception to the normal public notice process provisions in § 431.416(g) of this subpart.

(f) *Administrative record.* (1) CMS will maintain, and publish on its public Web site, an administrative record that may include, but is not limited to the following:

(i) The demonstration application from the State.

(ii) The State's disaster exemption request and CMS' response, if applicable.

(iii) Written public comments sent to the CMS and any CMS responses.

(iv) If an application is approved, the final special terms and conditions, waivers, expenditure authorities, and award letter sent to the State.

(v) If an application is denied, the disapproval letter sent to the State.

(vi) The State acceptance letter, as applicable.

(vii) Specific requirements related to the approved and agreed upon terms and conditions, such as implementation reviews, evaluation design, quarterly progress reports, annual reports, and interim and/or final evaluation reports.

(viii) Notice of the demonstration's suspension or termination, if applicable.

(2) To ensure that the public has access to all documentation related to the demonstration project, including the aforementioned items, we will also provide a link to the State's public Web site.

(g) *Exemption from the normal public notice process.* (1) CMS may waive, in whole or in part, the Federal and State public notice procedures to expedite a decision on a proposed demonstration or demonstration extension request that addresses a natural disaster, public health emergency, or other sudden emergency threats to human lives.

(2) The Secretary may exempt a State from the normal public notice process or the required time constraints imposed in this section or § 431.408(a) of this subpart when the State demonstrates to CMS the existence of unforeseen circumstances resulting from a natural disaster, public health emergency, or other sudden emergency that directly threatens human lives that warrant an exception to the normal public notice process.

(i) The State is expected to discharge its basic responsibilities in submitting demonstration applications to the Secretary as required in § 431.412 of this subpart.

(ii) Such applications will be posted on the CMS Web site.

(3) A State must establish (or meet) all of the following criteria to obtain such an exemption from the normal public notice process requirements:

(i) The State acted in good faith, and in a diligent, timely, and prudent manner.

(ii) The circumstances constitute an emergency and could not have been reasonably foreseen.

(iii) Delay would undermine or compromise the purpose of the demonstration and be contrary to the interests of beneficiaries.

(4) CMS will publish on its Web site any disaster exemption determinations within 15 days of approval, as well as the revised timeline for public comment or post-award processes, if applicable.

§ 431.420 Monitoring and compliance.

(a) *General.* (1) Any provision of the Social Security Act that is not expressly waived by CMS in its approval of the demonstration project are not waived, and States may not stop compliance with any of these provisions not expressly waived. Waivers may be limited in scope to the extent necessary to achieve a particular purpose or to the extent of a particular regulatory requirement implementing the statutory provision.

(2) States must comply with the terms and conditions of the agreement between the Secretary and the State to implement a State demonstration project.

(b) *Implementation reviews.* (1) The terms and conditions will provide that the State will perform periodic reviews of the implementation of the demonstration.

(2) CMS will review documented complaints that a State is failing to comply with requirements specified in the special terms and conditions and implementing waivers of any approved demonstration.

(3) CMS will promptly share with the State complaints that CMS has received and will also provide notification of any applicable monitoring and compliance issues.

(c) *Post award.* Within 6 months after the implementation date of the demonstration and annually thereafter, the State must hold a public forum—

(1) To solicit comments on the progress of a demonstration project.

(2) At which members of the public have an opportunity to provide comments and in such time as to include a summary of the forum in the quarterly report associated with the quarter in which the forum was held, as well as in its annual report to CMS.

(3) The public forum to solicit feedback on the progress of a demonstration project must occur using one of the following:

(i) A Medical Care Advisory Committee that operates in accordance with § 431.412 of this subpart.

(ii) A commission or other similar process, where meetings are open to members of the public, and would afford an interested party the opportunity to learn about the demonstration's progress.

(iii) The State must publish the date, time, and location of the public forum in a prominent location on the State's public Web site, at least 30 days prior to the date of the planned public forum.

(4) [Reserved]

(d) *Terminations and suspensions.* (1) The Secretary may suspend or terminate a demonstration in whole or in part, any time before the date of expiration, whenever it determines that the State has materially failed to comply with the terms of the demonstration project.

(2) The Secretary may also withdraw waivers or expenditure authorities based on a finding that the demonstration project is not likely to achieve the statutory purposes.

(3) The terms and conditions for the demonstration will detail any notice and appeal rights for the State for a termination, suspension or withdrawal of waivers or expenditure authorities.

(e) *Closeout costs.* When a demonstration is terminated, suspended, or if waivers or expenditure authority are withdrawn, Federal funding is limited to normal closeout costs associated with an orderly termination of the demonstration or expenditure authority, including service costs during any approved transition period, and administrative costs of disenrolling participants.

(f) *Federal evaluators.* (1) The State must fully cooperate with CMS or an independent evaluator selected by CMS to undertake an independent evaluation of any component of the demonstration.

(2) The State must submit all requested data and information to CMS or the independent evaluator.

§ 431.424 Evaluation requirements.

(a) *General.* States are permitted and encouraged to use a range of appropriate evaluation strategies (including experimental and other quantitative and qualitative designs) in the application of evaluation techniques with the approval of CMS.

(b) *Demonstration evaluations.* Demonstration evaluations will include the following:

(1) *Quantitative research methods.* (i) These methods involve the empirical investigation of the impact of key programmatic features of the demonstration.

(ii) CMS will consider alternative evaluation designs when quantitative designs are technically infeasible or not well suited to the change made by the demonstration.

(2) *Approaches that minimize beneficiary impact.* The evaluation process must minimize burden on beneficiaries and protect their privacy in terms of implementing and operating the policy approach to be demonstrated while ensuring the impact of the demonstration is measured.

(c) *Evaluation design plan.* (1) The State will submit and receive CMS approval of a design for an evaluation of the demonstration project and publish this document to the State's public Web site within 30 days of CMS approval.

(2) The draft demonstration evaluation design must include all of the following:

(i) A discussion of the demonstration hypotheses that are being tested including monitoring and reporting on the progress towards the expected outcomes.

(ii) The data that will be utilized and the baseline value for each measure.

(iii) The methods of data collection.

(iv) A description of how the effects of the demonstration will be isolated

from those other changes occurring in the State at the same time through the use of comparison or control groups to identify the impact of significant aspects of the demonstration.

(v) A proposed date by which a final report on findings from evaluation activities conducted under the evaluation plan must be submitted to CMS.

(vi) Any other information pertinent to the State's research on the policy operations of the demonstration operations.

(d) *Evaluations for demonstration extensions.* (1) In the event that the State requests to extend the demonstration beyond the current approval period under the authority of section 1115(a), (e), or (f) of the Act, the State must submit an interim evaluation report as part of the State's request for a subsequent renewal of the demonstration.

(2) State evaluations must be published on the State's public Web site within 30 days of submission to CMS.

(e) *Approved evaluation designs.* The State must publish the CMS-approved demonstration evaluation design on the State's public Web site within 30 days of CMS approval.

(f) *Federal evaluations.* The State must comply with all requirements set forth in this subpart.

(g) *Federal public notice.* CMS will post, or provide a link to the State's public Web site, all evaluation materials, including research and data collection, on its Web site for purposes of sharing findings with the public within 30 days of receipt of materials.

§ 431.428 Reporting requirements.

(a) *Annual reports.* The State must submit an annual report to CMS documenting all of the following:

(1) Any policy or administrative difficulties in the operation of the demonstration.

(2) The status of the health care delivery system under the demonstration with respect to issues and/or complaints identified by beneficiaries.

(3) The impact of the demonstration in providing insurance coverage to beneficiaries and uninsured populations.

(4) Outcomes of care, quality of care, cost of care and access to care for demonstration populations.

(5) The results of beneficiary satisfaction surveys, if conducted during the reporting year, grievances and appeals.

(6) The existence or results of any audits, investigations or lawsuits that impact the demonstration.

(7) The financial performance of the demonstration.

(8) The status of the evaluation and information regarding progress in achieving demonstration evaluation criteria.

(9) Any State legislative developments that may impact the demonstration.

(10) The results/impact of any demonstration programmatic area defined by CMS that is unique to the demonstration design or evaluation hypothesis.

(11) A summary of the annual post-award public forum, including all public comments received regarding the progress of the demonstration project.

(b) *Submitting and publishing annual reports.* States must submit a draft annual report to CMS no later than 90 days after the end of each demonstration year, or as specified in the demonstration's STCs. The State must publish its draft annual report on its public Web site within 30 days of submission to CMS.

(1) Within 60 days of receipt of comments from CMS, the State must submit to CMS the final annual report for the demonstration year.

(2) The final annual report is to be published on the State's public Web site within 30 days of approval by CMS.

Authority: Catalog of Federal Domestic Assistance Program No. 93.778, Medical Assistance Program.

Dated: March 9, 2011.

Donald M. Berwick,

Administrator, Centers for Medicare & Medicaid Services.

Approved: July 15, 2011.

Kathleen Sebelius,

Secretary, Department of Health and Human Services.

[FR Doc. 2012–4354 Filed 2–22–12; 11:15 am]

BILLING CODE 4120–01–P

DEPARTMENT OF THE TREASURY

31 CFR Part 33

RIN 1505–AC30

DEPARTMENT OF HEALTH AND HUMAN SERVICES

45 CFR Part 155

[CMS–9987–F]

RIN 0938–AQ75

Application, Review, and Reporting Process for Waivers for State Innovation

AGENCY: Centers for Medicare & Medicaid Services (CMS), HHS; Department of the Treasury.

ACTION: Final rule.

SUMMARY: This final rule sets forth a procedural framework for submission and review of initial applications for a Waiver for State Innovation described in section 1332 of the Patient Protection and the Affordable Care Act including processes to ensure opportunities for public input in the development of such applications by States and in the Federal review of the applications.

DATES: These regulations are effective on April 27, 2012.

FOR FURTHER INFORMATION CONTACT: *Department of the Treasury:* Cameron Arterton, (202) 622–0044.

Centers for Medicare & Medicaid Services: Ben Walker, (301) 492–4430.

SUPPLEMENTARY INFORMATION:

I. Executive Summary:

A. Purpose of the Regulatory Action

Section 1332(a)(4)(B) of the Patient Protection and Affordable Care Act (the Affordable Care Act) (Pub. L. 111–148, enacted on March 23, 2010), requires the Secretary of Health and Human Services (HHS) and the Secretary of the Treasury (the Secretaries) to issue regulations regarding procedures for Waivers for State Innovation under section 1332 of the Affordable Care Act. On March 14, 2011, the Secretaries published proposed rules to satisfy this requirement. This finalizes those proposed rules.

B. Summary of the Major Provisions of the Regulatory Action in Question

These final rules make a small number of changes to the proposed rules based on comments received from the public. We have removed a requirement for applications to be submitted in printed format, to reduce administrative burden. We have clarified that evidence of the State public notice and comment must include, ''a description of the key issues raised * * *'' during such period, to provide the Secretaries with a summary of public consultation to date. We have added a provision to specify that States must submit waiver applications sufficiently in advance of the requested effective date to ensure that an appropriate amount of time is available for implementation if the waiver is approved. We have also added a provision to specify that a complete application must include an implementation timeline, to facilitate an analysis by States and the Secretaries regarding the feasibility of the proposed implementation schedule. We have also clarified that a State does not have to enact a new law in support of a section 1332 waiver if the State already has a

law in place, to eliminate the need for redundant legislative activities.

Lastly, we have made some structural changes to one section of the rules to reduce complexity, without modifying the content.

C. Costs and Benefits

These regulations are not economically significant, under section 3(f) of Executive Order 12866.

II. Background

Section 1332 of the Affordable Care Act creates a new Waiver for State Innovation and authorizes the Secretaries to waive all or any of the following requirements falling under their respective jurisdictions for health insurance coverage within a State for plan years beginning on or after January 1, 2017:

- Part I of subtitle D of Title I of the Affordable Care Act (relating to the establishment of qualified health plans);
- Part II of subtitle D of Title I of the Affordable Care Act (relating to consumer choices and insurance competition through health benefit exchanges);
- Section 1402 of the Affordable Care Act (relating to reduced cost sharing for individuals enrolling in qualified health plans); and
- Sections 36B (relating to refundable credits for coverage under a qualified health plan), 4980H (relating to shared responsibility for employers regarding health coverage), and 5000A (relating to tax penalties for the failure to maintain minimum essential coverage) of the Internal Revenue Code.

Section 1332 of the Affordable Care Act provides that references in that section to ''Secretary'' refer to the Secretary of HHS for waivers relating to Parts I and II of subtitle D of Title I of the Affordable Care Act and section 1402 of the Affordable Care Act, and refer to the Secretary of the Treasury for waivers relating to sections 36B, 4980H, and 5000A of the Internal Revenue Code.

Section 1332(a)(4)(B) of the Affordable Care Act requires the Secretaries to issue regulations that provide the following:

- A process for public notice and comment at the State level, including public hearings, that is sufficient to ensure a meaningful level of public input (section 1332(a)(4)(B)(i) of the Affordable Care Act);
- A process for the submission of an application that ensures the disclosure of (A) the provisions of law that the State involved seeks to waive, and (B) the specific plans of the State to ensure that the waiver will be in compliance with specified statutory requirements relating to the comprehensiveness of coverage, affordability of coverage, scope of coverage, and the effect on the Federal deficit (as described below) (section 1332(a)(4)(B)(ii) of the Affordable Care Act);
- A process for providing public notice and comment after the application is received by the Secretary that is sufficient to ensure a meaningful level of public input and that does not impose requirements that are in addition to, or duplicative of, requirements imposed under the Administrative Procedure Act (APA), or requirements that are unreasonable or unnecessarily burdensome with respect to State compliance (section 1332(a)(4)(B)(iii) of the Affordable Care Act);
- A process for the submission to the applicable Secretary or Secretaries of periodic reports by the State concerning the implementation of the program under a waiver (section 1332(a)(4)(B)(iv) of the Affordable Care Act); and
- A process for the periodic evaluation by the applicable Secretary or Secretaries of the program under a waiver (section 1332(a)(4)(B)(v) of the Affordable Care Act).

Although section 1332 of the Affordable Care Act does not authorize waivers for related programs like Medicaid (title XIX of the Social Security Act (the Act)) or the Children's Health Insurance Program (CHIP, title XXI of the Act), those programs have existing waiver authorities. Section 1332(a)(5) of the Affordable Care Act requires the Secretaries to develop a process for coordinating and consolidating the State waiver processes applicable under the provisions of section 1332 of the Affordable Care Act with the existing waiver processes applicable under titles XVIII (Medicare), XIX (Medicaid), and XXI (CHIP) of the Act, and any waiver processes under other Federal laws relating to the provision of health care items or services. Section 1332(a)(5) of the Affordable Care Act further requires the process developed by the Secretaries to permit a State to submit a single application for a waiver under any or all of those provisions.

Proposed rules were issued on March 14, 2011, to implement the procedural requirements of section 1332 of the Affordable Care Act. The proposed rules were also intended to provide for a waiver application process that can be coordinated and consolidated with the processes for the submission of applications for waivers under titles XVIII, XIX, and XXI of the Act.

III. Summary of the Provisions of the Proposed Regulations and Analysis of and Responses to Public Comments

In the March 14, 2011 **Federal Register** (76 FR 13553), we published proposed rules addressing the procedural requirements of section 1332 of the Affordable Care Act. We received a total of 32 timely comments on the proposed rules. The modifications to the proposed regulations that are included in these final regulations reflect consideration of the comments submitted.

A. Basis and Purpose (31 CFR 33.100 and 45 CFR 155.1300)

To implement the provisions of section 1332 of the Affordable Care Act, the Department of the Treasury proposed to add new part 33 to 31 CFR Subtitle A and the CMS, on behalf of HHS, proposed to add new part 155 to 45 CFR Subtitle A. These new parts address procedures for State development and submission of an application for a Waiver for State Innovation under section 1332 of the Affordable Care Act (referred to in the proposed regulations as a section 1332 waiver), a process for providing public notice and opportunity for comment at the State and Federal levels, a process for the review of applications by the Secretaries, and processes for the monitoring and evaluation of approved section 1332 waivers by the States and the Secretaries, including the periodic submission of reports by the States to the Secretaries.

The final regulations make no change to the proposed regulations regarding these provisions.

B. Coordinated Waiver Process (31 CFR 33.102 and 45 CFR 155.1302)

The proposed regulations at 31 CFR 33.102 and 45 CFR 155.1302 permitted, but did not require, States to submit a single application for a section 1332 waiver and a waiver under one or more of the existing waiver processes applicable under titles XVIII, XIX, and XXI of the Act, or under any other Federal law relating to the provision of health care items or services, provided that the application is consistent with the procedures described in these proposed regulations, the procedures for section 1115 demonstrations, if applicable, and the procedures under any other applicable Federal law under which the State seeks a waiver.[1]

[1] Although section 1332 of the Affordable Care Act does not authorize waivers for related programs like Medicaid (title XIX of the Act) or the Children's Health Insurance Program (title XXI of the Act), those programs have existing waiver authorities.

The proposed regulations required a State seeking a section 1332 waiver to submit a waiver application to the Secretary of HHS. Upon receipt, the Secretary of HHS would transmit any application that includes a request for a waiver of provisions under the jurisdiction of the Secretary of the Treasury (sections 36B, 4980H and 5000A of the Internal Revenue Code) to be reviewed in accordance with the provisions of the regulations. The Secretaries would coordinate the review of any application that includes a request for a waiver of provisions falling under the jurisdiction of each of the Departments of HHS and the Treasury (the Departments).

We received the following comments concerning the proposed coordinated waiver process.

Comment: Commenters supported the proposal to permit the submission of a single, coordinated application for a section 1332 waiver and a waiver under one or more of the existing waiver processes. Several commenters asked that we provide more detail on the coordinated waiver process, and align procedures and timelines. One commenter also asked that we allow States to submit a single analysis of cost and coverage to satisfy both processes.

Response: The Departments plan to work closely with States that are considering submitting multiple waivers to craft a process that meets a State's specific circumstances. We anticipate that there may be opportunities to streamline and align the processes. We also are mindful that each of the specific waiver provisions has unique statutory requirements. We encourage any State that is considering a coordinated submission to approach the Departments as soon as is practicable to discuss how best to proceed to minimize administrative complexity while ensuring that the integrity of the review and approval processes is maintained.

Comment: One commenter requested that the Secretaries require public comment on the market impacts of a combined waiver application.

Response: We agree that public comment of this sort is useful, and we believe that 31 CFR 33.112 and 45 CFR 155.1312 of the proposed regulations, as finalized, allow stakeholders to provide such comments.

C. Application Procedures (31 CFR 33.108 and 45 CFR 155.1308)

The proposed regulations established procedures for the submission of applications for an initial section 1332 waiver.

Under 31 CFR 33.108(a) and 45 CFR 155.1308(a) of the proposed regulations, each application for an initial section 1332 waiver will undergo a preliminary review by the Secretaries that will be completed within 45 days after the application is submitted.

During this preliminary review period, the Secretaries would make a preliminary determination as to whether a State's application complies with the requirements set forth in 31 CFR 33.108(a)(2) and 45 CFR 155.1308(a)(2). If the Secretaries determined that an application is incomplete, the Secretary of HHS would send the State a written notice of the elements missing from the application. The proposed regulations provided that a preliminary determination that an application is complete does not preclude a finding during the 180-day Federal decision-making period that a necessary element of the application is missing or insufficient, rendering the application incomplete.

The proposed regulations provided that a submitted application would not be considered received until the Secretaries have made this preliminary determination that the application is complete.

The proposed regulations provided that, upon a preliminary determination by the Secretaries that an application they have received is complete, as defined under the proposed regulations, the Secretary of HHS would send the State a written notice informing the State that the Secretaries have made such a preliminary determination, and the date upon which they have made that preliminary determination. That date would also mark the beginning of the Federal public notice and comment period and the 180-day Federal decision-making period.

Under the proposed regulations, an application for initial approval of a section 1332 waiver would not be considered complete unless the application: (1) Complies with the application procedures of 31 CFR 33.108(a)(2)(iv) and 45 CFR 155.1308(a)(2)(iv); (2) provides written evidence of the State's compliance with the public notice requirements set forth in 31 CFR 33.112 and 45 CFR 155.1312; and (3) provides all of the following:

- A comprehensive description of the enacted State legislation and program to implement a plan meeting the requirements for a waiver under section 1332, as required under section 1332(a)(1)(B)(i) of the Affordable Care Act;
- A copy of the enacted State legislation authorizing such waiver request, as required under section 1332(a)(1)(C) of the Affordable Care Act;
- A list of the provisions of law that the State seeks to waive including a brief description of the reason for the specific requests; and
- The analyses, actuarial certifications, data, assumptions, targets and other information sufficient to provide the Secretaries with the necessary data to determine that the State's proposed waiver:
  + As required under section 1332(b)(1)(A) of the Affordable Care Act (the comprehensive coverage requirement), would provide coverage that is at least as comprehensive as the coverage defined in section 1302(b) of the Affordable Care Act and offered through Exchanges established under Title I of the Affordable Care Act as certified by the Office of the Actuary of the Centers for Medicare & Medicaid Services based on sufficient data from the State and from comparable States about their experience with programs created by the Affordable Care Act and the provisions of the Affordable Care Act that would be waived;
  + As required under section 1332(b)(1)(B) of the Affordable Care Act (the affordability requirement), would provide coverage and cost sharing protections against excessive out-of-pocket spending that are at least as affordable as the provisions of Title I of the Affordable Care Act would provide;
  + As required under section 1332(b)(1)(B)(C) of the Affordable Care Act (the scope of coverage requirement), would provide coverage to at least a comparable number of its residents as the provisions of Title I of the Affordable Care Act would provide; and
  + As prohibited under section 1332(b)(1)(D) of the Affordable Care Act (the Federal deficit requirement), would not increase the Federal deficit.

Section 1332(a)(3) of the Affordable Care Act requires that the Secretaries provide for an alternative means by which the aggregate amount of tax credits or cost-sharing reductions that would have been paid had the State not received a waiver, be paid to the State for purposes of implementing the waiver. This amount will be determined annually by the Secretaries, on a per capita basis, taking into consideration the experience of other States for participation in an Exchange and tax credits and cost-sharing reductions provided in such other States.

To provide information necessary for the Secretaries to determine (1) that the State's proposed waiver meets the comprehensive coverage requirement, the affordability requirement, the scope of coverage requirement and the Federal

deficit requirement and (2) the annual amount, if any, of foregone tax credits and cost-sharing reductions that will be paid to the State for purposes of implementing the waiver pursuant to section 1332(a)(3) of the Affordable Care Act, the proposed regulations required that a State's application contain:

(1) Actuarial analyses and actuarial certifications to support the State's estimates that the proposed waiver will comply with the comprehensive coverage requirement, the affordability requirement and the scope of coverage requirement.

(2) Economic analyses to support the State's estimates that the proposed waiver will comply with the comprehensive coverage requirement, the affordability requirement, the scope of coverage requirement and the Federal deficit requirement, including:

- A detailed 10-year budget plan that is deficit neutral to the Federal government, as prescribed in section 1332(a)(1)(B)(ii) of the Affordable Care Act, and includes all costs under the waiver, including administrative costs and other costs to the Federal government, if applicable; and
- A detailed analysis regarding the estimated impact of the waiver on health insurance coverage in the State.

(3) The data and assumptions used to demonstrate that the State's proposal is in compliance with the comprehensive coverage requirement, the affordability requirement, the scope of coverage requirement and the Federal deficit requirement, including:

- Information on the age, income, health expenses and current health insurance status of the relevant State population; the number of employers, categorized by number of employees and by whether the employer offers health insurance; cross-tabulations of these variables; and an explanation of data sources and quality; and
- An explanation of the key assumptions and methodology used to develop the estimates of the effect of the waiver on health insurance coverage in the State and on the Federal budget, such as individual and employer participation rates, behavioral changes, premium and price effects, and other relevant factors.

(4) Additional information supporting the State's proposed waiver, including:

- An explanation as to whether the waiver increases or decreases the administrative burden on individuals, insurers, and employers, and if so, how and why;
- An explanation of whether and how the waiver will affect the implementation of the provisions of the Affordable Care Act which the State is not requesting to waive in the State and at the Federal level;
- An explanation of how the waiver will affect residents who need to obtain health care services out-of-State, as well as the States in which such residents may seek such services;
- If applicable, an explanation of how the State will provide the Federal government with all information necessary to administer the waiver at the Federal level; and
- An explanation of how the State's proposal will address potential individual, employer, insurer, or provider compliance, waste, fraud and abuse within the State or in other States.

(5) For purposes of post-award monitoring, suggested quarterly, annual, and cumulative targets for the comprehensive coverage requirement, the affordability requirement, the scope of coverage requirement and the Federal deficit requirement of section 1332(b) of the Affordable Care Act.

(6) Other information consistent with guidance provided by the Secretaries.

Under the proposed regulations, there is no minimum time specified between the submission of an application and start date of the waiver. However, we solicited comments on whether a State should be required to submit an application at least 12 months in advance of the requested effective date, to allow for the effective implementation of approved waivers at the State level.

The requirement in the proposed regulations that a State provide certain analysis, certifications, data, assumptions, targets and other information as part of a section 1332 waiver application was designed to ensure that a State's development of a waiver proposal addresses major relevant issues for the State and provides the Secretaries with sufficient information to fully assess the projected impact of section 1332 waiver proposals for the statutory requirements and to accurately determine the amount to be paid to the State for purposes of implementing the waiver under section 1332(a)(3) of the Affordable Care Act. The Secretaries also solicited comments regarding these proposed requirements, as well as what other types of analysis, certifications, data, assumptions, targets and information States would consider useful in supporting an application for a section 1332 waiver and whether these regulations should specifically require such additional analyses, certifications, data, assumptions, targets and information to be included as part of a section 1332 waiver application.

Lastly, during the Federal review process, the proposed regulation provided that the Secretaries may request additional supporting information from the State as needed to address public comments or to address issues that arise in reviewing the application.

We received the following comments concerning application procedures.

1. Application Contents

Comment: In general, commenters supported the proposed application contents. Several commenters asked that the Secretaries require additional information to be submitted with the application, including background information on the State's insurance market; the types of health plans or other arrangements a State will utilize to provide coverage and the criteria for participation in the plan; the health benefits that will be covered and how those compare to the essential health benefits specified in section 1302(b) of the Affordable Care Act; whether and how the waiver will affect age rating and the value of financial assistance for individuals of different ages; how the waiver will affect children and youth with special health care needs and women with high-risk pregnancies; how the State will select the plans and monitor their performance; how payment rates for health plans and/or providers would be determined; how standards for provider network adequacy would be determined and met; how quality and appropriateness of care would be assessed; and how transparency in coverage and consumer choice and access to essential community providers would be monitored.

Commenters also requested that the Secretaries require a State to provide specific information for specific waiver requests. For example, one commenter asked that the Secretaries require a State seeking a waiver that would affect Federally Qualified Health Centers (FQHCs) or essential community providers (ECPs) to provide a set of detailed information about the rationale for such a proposal and the financial impact of it on FQHCs and ECPs. Another made a similar request with respect to waivers that affect essential health benefits.

Response: We recognize that additional information may be needed to determine whether a proposal meets the statutory criteria for approval. As set forth in 31 CFR 33.108(a)(2)(iv)(D)(6) and 45 CFR 155.1308(a)(2)(iv)(D)(6), a State must also submit information consistent with guidance provided by the Secretaries, in addition to the enumerated data and analyses. This provision of the regulations allows the

Secretaries to request additional information, including information suggested by commenters, which is relevant to determine whether a waiver proposal meets the statutory criteria for approval. As such, we finalized these provisions of the proposed regulations without change.

Comment: One commenter requested that States provide an implementation timeline as part of a waiver application.

Response: We agree with this comment and have added language to the final regulation in 31 CFR 33.108(f)(4)(iv) and 45 CFR 155.1308(f)(4)(iv). We believe that the inclusion of an implementation timeline will help the Secretaries work with States to address the concern raised by another commenter that States implement a waiver in a manner that does not leave its residents without affordable coverage during the implementation period.

Comment: Several commenters asked the Secretaries to require States to provide a description of why the requested waivers are needed.

Response: We agree that a discussion of the reasons for requesting the waiver is important and should be more than cursory. Accordingly, the final regulation at 31 CFR 33.108(a)(2)(iv)(C) and 45 CFR 155.1308(a)(2)(iv)(C) no longer characterizes the required description as ''brief.''

Comment: One commenter asked that the Secretaries permit the application to use existing reports and data sources available to the Federal government.

Response: We agree that the process should be minimally burdensome for all involved entities, while still ensuring that the Secretaries are able to complete the analyses required by statute. We encourage States to utilize existing data wherever possible to facilitate the waiver approval process and we look forward to working closely with States to ensure that the proposed data sources are reliable and acceptable.

Comment: Several commenters asked that the Secretaries require applications to include a description of the key issues raised during the State public notice and comment period, along with how the State considered those comments in developing the application.

Response: The provisions of 31 CFR 33.108(a)(2)(iv)(B) and 45 CFR 155.1308(a)(2)(iv)(B) of the proposed regulations require an application to provide, ''* * * written evidence of the State's compliance with the public notice requirements * * *'' We agree with the commenter that this evidence should include a description of the key issues raised during the State public notice and comment period, and are adding this clarification to 31 CFR 33.108(f)(2) and 45 CFR 155.1308(f)(2) of the final rule. We believe that the substantive contents of the application will allow the Secretaries and interested parties to discern how the State considered the comments in constructing the proposal.

Comment: Commenters asked that the Secretaries clarify that in addition to providing the proposed actuarial and economic analyses, a State must also provide the underlying data and assumptions used to develop the analyses.

Response: We believe that the provisions of the proposed regulations require the State to submit the underlying data and assumption used to develop the analysis. The proposed regulations at 31 CFR 33.108(a)(2)(iv)(D)(3) and 45 CFR 155.1308(a)(2)(iv)(D)(3) specified that an application must include, ''The data and assumptions used to demonstrate that the State's proposed waiver is in compliance with the comprehensive coverage requirement, the affordability requirement, the scope of coverage requirement and the Federal deficit requirement.'' We are maintaining this language in the final regulations.

Comment: One commenter suggested that the Secretaries limit the amount of documentation required to be submitted if the waiver proposal does not significantly impact the stability of the insurance market.

Response: The statute requires the Secretaries to determine whether an application meets all the statutory approval criteria, regardless of its scope. Consequently, the Secretaries must receive and review the data and analyses required to be included in the application as provided in the regulations. We have no interest in requiring States to submit unnecessary information, and will work with States to ensure that the application process is appropriately tailored to the specific proposal and to the State's circumstances.

Comment: One commenter asked that the Secretaries require that all actuarial estimates of coverage and market stability be performed by independent experts.

Response: The Secretaries plan to evaluate the analyses submitted with a State's application. We expect the State analyses to adhere to generally accepted standards for quality and the regulations require the States to submit the data and assumptions underlying such analyses, which will enable the Secretaries to conduct a thoughtful review. As such, the final regulations follow the proposed regulations without change.

Comment: One commenter asked the Secretaries to clarify that there is interaction between the statutory requirements for approval of a section 1332 waiver, for example, that the affordability of coverage will affect the number of individuals who will be covered.

Response: We agree with the comment. We expect States to address such connections in the analyses supporting an application.

Comment: One commenter asked that the Secretaries require that any application that requested a waiver of the minimum coverage provision be accompanied by detailed projections demonstrating that comparable levels of coverage and affordability will be attained and maintained over at least a 10-year period in the individual market.

Response: We appreciate this comment. The Secretaries intend to work with States to ensure that the required analyses are consistent with one another. For future guidance, we will consider requiring an analysis for applications requesting a waiver of specific provisions to be provided over a specific time frame.

Comment: One commenter objected to proposed questions regarding the impact of a proposed waiver on unwaived provisions and how the State will provide the Federal government with information necessary to administer the waiver at the Federal level.

Response: We believe that these questions are important to assess whether the proposal complies with the statutory criteria for approval. In particular, we believe that the question about Federal administration is important to understand the impact of the proposal on the Federal deficit.

Comment: One commenter suggested that the Secretaries require States to provide analysis to ensure that proposed innovations do not have the unintended effect of increasing the cost of insurance for the remaining market and decreasing enrollment.

Response: The analyses in 31 CFR 33.108(a)(2)(iv)(C)(4) and 45 CFR 155.1308(a)(2)(iv)(C)(4) of the proposed rules were based on the statutory criteria for waiver approval, as specified in section 1332(b)(1) of the Affordable Care Act. In describing the scope of coverage and affordability requirements, the statute specifies that comparisons are to be made with respect to the provisions of title I of the Affordable Care Act, which contains the market reform provisions that affect the individual and small group markets—

inside and outside the Exchange. Consequently, we believe that the provisions of the proposed regulations specified that a State must provide the type of analysis that is requested by the commenter. We maintain this language in the final regulations.

2. Timing of Applications

Comment: We received a number of comments regarding whether the Secretaries should require a State to submit an application for a section 1332 waiver 12 months (or some other amount of time) in advance of the requested effective date, to allow for the careful implementation of what may be complex waivers. In general, commenters supported a timing requirement of either 12 or 24 months in advance. However, some commenters opposed any timing requirement. In addition, one commenter asked that the Secretaries require at least 18 months between approval and implementation.

Response: In recognition of the range of time standards recommended by commenters, along with the likelihood that the scope of section 1332 waivers will vary widely based on the provisions a State proposes to waive and other related factors, we are amending the proposed language to specify that applications must be submitted sufficiently in advance of the requested effective date to allow for an appropriate implementation timeline. In addition, as discussed previously, the final regulations adopt a recommendation to include an implementation timeline as part of the waiver application. We believe this new timeline requirement will help ensure applications are submitted sufficiently in advance of the effective date. We further encourage States to contact the Secretaries during the conceptual phase of a section 1332 waiver to establish a reasonable timeframe for the submission of an application and the effective date of an approved proposal.

Comment: One commenter asked the Secretaries to clarify that there can only be one 45-day preliminary review period per application.

Response: We agree with the commenter's clarification. We note that to the extent that a State's application is denied and the State resubmits the application, the Secretaries will treat the application as a new application that is subject to a 45-day preliminary review period.

3. Approval Standards

We received a number of comments regarding standards a section 1332 waiver proposal must meet to be approved by the Secretaries. The proposed regulations covered only the procedural standards for section 1332 waivers, and did not address the substantive standards for approval beyond restating the statutory criteria.

Comment: Several commenters asked that the Secretaries define the comprehensive-coverage, affordability, and scope of coverage requirements specified in sections 1332(b)(1)(A), (B), and (C) of the Affordable Care Act. One commenter proposed a specific framework for the comprehensive-coverage standard based on the service categories specified in section 1302(b) of the Affordable Care Act, along with other analyses. Another commenter asked that the Secretaries clarify that affordability benchmarks will take into account the income of eligible individuals and the premium and cost-sharing subsidies they would receive. Another commenter asked that affordability analyses include consideration of services that are excluded from the proposed waiver. Lastly, one commenter asked that the Secretaries provide benchmarks for the scope of coverage analysis and allow public comment on such benchmarks.

Commenters suggested that the Secretaries should expand the criteria for approval to include providing a sufficient choice of health plans. One commenter specified that the Secretaries should require the State to ensure a selection of health plans that meet the needs of low-income individuals. Another commenter asked that States be required to demonstrate the adequacy of provider networks as a condition of approval.

Commenters also suggested that the Secretaries condition waiver approval on the inclusion of specific services and categories of services in the benefit package; the coordination of private and public delivery systems; the integration of enrollment and renewal processes; and the ability of delivery systems to measure acuity and severity and adjust cost structures appropriately.

One commenter asked the Secretaries to specify that if any waiver alters Medicaid and CHIP, a State must maintain Medicaid and CHIP protections and ''enabling services'' (such as transportation and translation) for the Medicaid and CHIP population. Another commenter asked the Secretaries to require States to demonstrate adequate protections for Medicaid beneficiaries who are included in a section 1332 waiver. Another commenter asked the Secretaries to require that States provide children who are currently covered by CHIP with coverage, cost-sharing protections, and benefits comparable to CHIP.

A commenter asked that the Secretaries require States seeking a waiver to provide for a similar age rating rule to the rule in section 1334 of the Affordable Care Act.

Commenters also asked that the Secretaries require States to comply with other provisions of the Affordable Care Act as a condition of waiver approval. These included the nondiscrimination provisions of section 1557 of the Affordable Care Act and the market reform rules that take effect in 2014.

One commenter said that States and the Secretaries must consider whether a proposal meets the statutory requirements for approval for both the overall population and specifically for American Indians and Alaska Natives.

Lastly, one commenter asked the Secretaries to require the CMS actuary to certify whether a State's proposal would provide coverage to a comparable number of residents purchasing individual insurance policies.

Response: We appreciate the comments submitted on standards for approval and will consider them as we develop the substantive component of the waiver approval process. Further, we clarify that section 1332(a)(2) of the Affordable Care Act clearly defines the scope of authority under section 1332, and does not extend to subtitle A of title I of the Affordable Care Act, which includes the market reform provisions, or section 1557 of the Affordable Care Act, which includes the nondiscrimination provisions.

4. General

Comment: Commenters asked the Secretaries to clarify that a State does not have to enact a new law and establish new programs if a sufficient law or program already exists.

Response: We agree with this comment. The final regulations at 31 CFR 33.108(f)(3)(ii) and 45 CFR 155.1308(f)(3)(ii) were modified to make clear that States with an existing law or program that addresses the waiver process and requirements are not required to enact a new law.

Comment: One commenter suggested that the Secretaries consider not requiring applications to be submitted in printed format.

Response: We agree with the commenter's suggestion, and are removing this requirement from the final rules.

Comment: One commenter asked the Secretaries to specify that they will process all submitted applications.

Response: We agree with the comment and believe that the proposed regulations address it. As set forth in 31 CFR 33.108(a)(2) and 45 CFR 155.1308(a)(2), the Secretaries will make a determination as to whether each submitted application is complete, and 31 CFR 33.116(c) and 45 CFR 155.1316(c) of the proposed rules specified that the Secretaries will make a final decision regarding all applications that are found to be complete. We are maintaining these provisions in the final regulations.

D. State Public Notice Requirements (31 CFR 33.112 and 45 CFR 155.1312)

Consistent with the provisions of section 1332 of the Affordable Care Act, to facilitate public involvement in the review and approval of section 1332 waiver applications, 31 CFR 33.112(a)(1) and 45 CFR 155.1312(a)(1) of the proposed regulations required a State to provide a public notice and comment period sufficient to ensure a meaningful level of public input for a section 1332 waiver application prior to the submission of that application to the Secretary of HHS for review and consideration. In addition, the proposed regulations required a State with one or more Federally-recognized Indian tribes within its borders to consult with those Indian tribes in accordance with Executive Order 13175.

Because meaningful input requires notice of the nature of the section 1332 waiver application, as part of the State public notice and comment period, the proposed regulations required a State to provide the public with the following information prior to the submission of an application:

- A comprehensive description of the section 1332 waiver application to be submitted to the Secretary of HHS, including information and assurances related to all statutory requirements and other information consistent with guidance provided by the Secretaries;
- Where copies of the section 1332 waiver application are available for public review and comment;
- How and where written comments may be submitted and reviewed by the public, and the timeframe during which public comments may be submitted; and
- The location, date and time of public hearings that will be convened by the State to seek public input on the section 1332 waiver application.

31 CFR 33.112(a)(2) and 45 CFR 155.1312(a)(2) of the proposed regulations required States to conduct public hearings that provide interested parties with the opportunity to learn about and comment on the contents of the section 1332 waiver application.

The State public notice and comment process must comply with applicable civil rights rules for accessibility, which require, for example—

- The provision of auxiliary aids and services such as interpreters for persons with disabilities where necessary for effective communication;
- The use of accessible meeting places for the hosting of public forums provided for in the Rule;
- Reasonable steps to provide meaningful access for limited English proficient (LEP) persons, such as the inclusion of ''tag lines'' on State web sites containing phone numbers for LEP persons to call to reach ''language line'' interpreters for assistance; and
- Other civil rights requirements applicable to the States under the Americans with Disabilities Act, section 504 of the Rehabilitation Act of 1973 and Title VI of the Civil Rights Act of 1964, among others.

We received the following comments concerning the proposed State public notice and comment process.

1. Timing

Comment: In general, commenters expressed support for a robust State public notice and comment process. Several commenters suggested that the Secretaries should specify a minimum amount of time for the State public notice and comment process, ranging from 45 to 90 days.

Response: We agree with commenters that the State public notice and comment period is an important element of a transparent approach. The proposed regulations require that the State public notice period be, ''sufficient to ensure a meaningful level of public input''. Because section 1332 waiver applications may take on a wide range of proposals, we believe that this approach better suits section 1332 waivers. To the extent that a proposal is particularly wide-ranging, the proposed regulations will support a longer State public notice and comment period, and if the proposal is minor, it can support a shorter period. As such, we are maintaining the language of the proposed regulations in the final rules. We further encourage States to contact the Secretaries during the conceptual phase of a section 1332 waiver to establish a reasonable timeframe for the State public notice and comment period.

2. Tribal Consultation

Comment: One commenter suggested that the Secretaries encourage States to use Medicaid tribal consultation procedures in the section 1332 waiver process.

Response: As set forth in 31 CFR 33.112(a)(2) and 45 CFR 155.1312(a)(2), a State with one or more Federally-recognized tribes within its borders must conduct a separate process for meaningful consultation with such tribes as part of the State public notice and comment process. In the preamble associated with this section, the Secretaries noted that such process is in accordance with Executive Order 13175, which mandated the establishment of regular and meaningful consultation and collaboration with tribal officials in the development of Federal policies that have ''tribal implications,'' which are defined as policies or actions ''with substantial direct effects on one or more Indian tribes, on the relationship between the Federal Government and Indian tribes, or on the distribution of power and responsibilities between the Federal Government and Indian tribes.'' As this executive order also applies to Medicaid, a State could use a Medicaid consultation process to satisfy the consultation needed for a section 1332 waiver. We agree with the commenter and encourage States to consider whether the use of such a process would be appropriate for section 1332 proposals.

3. Public Hearings

Comment: Commenters supported the requirement for public hearings. Commenters suggested allowing States to determine the appropriate number of public hearings, with a minimum of one or two. One commenter asked the Secretaries to specify that hearings must happen in multiple geographic locations.

Response: As set forth in 31 CFR 33.112(c)(1) and 45 CFR 155.1312(c)(1), ''* * * a State must conduct public hearings regarding the State's application.'' We believe that the proposed regulation permits a State to determine the appropriate number of hearings, but, by definition, ''hearings'' means no less than two. As such, the final regulations were not changed.

31 CFR 33.112(c)(2) and 45 CFR 155.1312(c)(2) provides that ''Such public hearings shall provide an interested party the opportunity to learn about and comment on the contents of the application for a section 1332 waiver.'' We interpret this to mean that a State must provide the opportunity for parties throughout a State to comment, either through multiple hearings in different locations, or through the use of phone or videoconferencing. We will maintain this provision in the final regulations.

Comment: Commenters supported the provisions in 31 CFR 33.112(c)(2) and

45 CFR 155.1312(c)(2) that specify that public hearings must provide an opportunity for an interested party to comment on the contents of an application for a section 1332 waiver. One commenter recommended that the Secretaries specify that legislative hearings can substitute for the State public notice and comment process. Other commenters opposed this recommendation, noting that legislative hearings may provide only limited opportunities for members of the public to comment.

Response: While the proposed rules do not specifically address whether legislative hearings may satisfy the public hearing requirement, 31 CFR 33.112(c)(2) and 45 CFR 155.1312(c)(2) of the proposed regulation provide that, ''Such public hearings shall provide an interested party the opportunity to learn about and comment on the contents of the application for a section 1332 waiver.'' If a legislative hearing provides an opportunity for interested parties to comment on the contents of a waiver application, then it meets the public hearing requirement; if, however, a legislative hearing does not allow the public to contribute, it does not meet the requirement. Specifically, we believe that to use a legislative hearing towards meeting this requirement, a State would need to provide a concrete proposal for comment well in advance of the hearing, as well as an opportunity for the public to speak at the hearing. We are maintaining this approach in the final regulations to provide States with flexibility but at the same time ensure that the public has a meaningful opportunity to comment.

4. General

Comment: One commenter recommended that the Secretaries require consumers to be full participants as waivers are designed, implemented, and monitored, and that such participation should include serving on an advisory board and a governing board.

Response: We agree with the commenter that States should involve consumers in the development, implementation, and monitoring of section 1332 waivers. We believe that the proposed State and Federal public notice and comment processes, along with the post-award public forum provision, ensure formal opportunities for participation. To ensure that consumers can participate, we clarify that the State public notice and comment process, the post-award public forum, and the draft and final annual reports published on a State's public Web site must comply with applicable civil rights requirements for accessibility, which are discussed in the preamble to this section. We also note that we expect that States will inform consumers and other interested parties regarding the availability of auxiliary aids and services for public forums.

We encourage States to consider where other opportunities for consumer involvement exist. Given that section 1332 waivers may be broad or narrow in scope, we have not modified the proposed regulation to add a provision requiring the establishment of advisory or governing boards. We believe that such a requirement would be overly burdensome for a State seeking a waiver that is limited in scope. We will work closely with States to ensure that the State public notice and comment process is sufficient to ensure a meaningful level of public input, as proposed in 31 CFR 33.112(a)(1) and 45 CFR 155.1312(a)(1).

Comment: A commenter asked that the Secretaries require that a State send a copy of any waiver proposal affecting FQHCs or ECPs directly to each FQHC in the State as well as to the State primary care association, and that the State allow the primary care association and at least two FQHCs time to speak at the public hearing.

Response: We acknowledge the critical role that FQHCs and ECPs have in providing services to low-income and other vulnerable populations. Given the potentially broad scope of section 1332 waivers, the Secretaries opted to take a broad approach to describing the State public notice and comment process in the proposed rules, to ensure that it would remain flexible to accommodate comments from all key stakeholders. The provisions of 31 CFR 33.112(a)(1) and 45 CFR 155.1312(a)(1) specify that, ''a State must provide public notice and comment period sufficient to ensure a meaningful level of public input * * * '' This will give FQHCs, ECPs, and other interested or affected stakeholders an opportunity for engagement.

Comment: A few commenters asked the Secretaries to clarify that the description of the proposal that is shared with the public must include specific details of the proposal, including analyses of financing and enrollment.

Response: We agree with the commenters that this information is important to ensuring that stakeholders have an opportunity to provide meaningful input. As set forth in 31 CFR 33.112(b)(1) and 45 CFR 155.1312(b)(1), the public notice must include the following: ''A comprehensive description of the application for a section 1332 waiver to be submitted to the Secretary including information and assurances related to all statutory requirements and other information consistent with guidance provided by the Secretary and the Secretary of the Treasury.'' We believe that this provision addresses the commenters' recommendations by ensuring that the public will have access to in-depth information needed to assess the impact of the proposal. We also retain the flexibility to clarify this provision in future guidance to address any areas in which additional information is needed to ensure that the State public notice and comment period is sufficient to ensure a meaningful level of public input.

E. Federal Public Notice and Approval Process (31 CFR 33.116 and 45 CFR 155.1316)

Consistent with section 1332 of the Affordable Care Act and the Secretaries' desire to implement a State waiver application process that promotes transparency, facilitates public involvement and input, and encourages sound decision-making at all levels of government, 31 CFR 33.116 and 45 CFR 155.1316 of the proposed regulations provided for a Federal public notice and comment period following a preliminary determination by the Secretaries that a State's application for a section 1332 waiver is complete.

To facilitate public participation in the section 1332 waiver application process, the proposed regulations required the Secretary of HHS to provide the public with notice of a section 1332 waiver application that has been preliminarily determined to be complete, including any supplemental materials received from a State during the Federal public notice and comment period, as well as regular updates for the status of a State's section 1332 waiver application. In addition, the Secretary of HHS would provide the public with information relating to (A) where copies of the section 1332 waiver application are available for public review and comment; (B) how and where written comments may be submitted and reviewed by the public, and the timeframe during which comments may be submitted; and (C) any public comments received during the Federal public notice and comment period.

Following the conclusion of the Federal notice and comment period, but in no event later than 180 days following the preliminary determination by the Secretaries that a State's application for a section 1332 waiver is complete, the final decision of the Secretaries on a State's section 1332

waiver application would be issued by the Secretary of HHS.

We received the following comments concerning the proposed Federal public notice and approval process.

1. Federal Public Notice Process

Comment: Commenters suggested that the Secretaries post applications and supporting materials on a dedicated Web site.

Response: As set forth in 31 CFR 33.116(b)(2) and 45 CFR 155.1316(b)(2), the Secretary of HHS, '' * * * will make available through its Web site and otherwise, and shall update as appropriate, public notice * * *.'' The proposed rules list the contents of this public notice, which include applications and supporting materials. We will consider whether to implement this requirement through a dedicated Web site, or through a page on the main HHS or CMS Web site.

Comment: Several commenters asked that the Secretaries require a specific length for the Federal public notice and comment period. One commenter suggested 45 days.

Response: We agree with commenters that the Federal public notice and comment period is an important element of a transparent approach. The proposed regulations require that the Federal public notice period be, ''sufficient to ensure a meaningful level of public input.'' Because the waiver applications may cover a wide range of proposals, we believe that this approach better suits section 1332 waivers. To the extent that a proposal is particularly wide-ranging, the proposed regulation will support a longer Federal public notice and comment period, and if the proposal is minor, it can support a shorter period. As such, we are maintaining the language of the proposed regulations in the final rules.

Comment: Commenters suggested that the Secretaries create an electronic mailing list to notify interested parties of the submission of an application and other actions taken.

Response: We will consider this suggestion as we develop the details of the Federal public notice and comment process.

Comment: Commenters asked that the Secretaries specify that the Secretaries will electronically publish all comments received during the Federal public notice and comment process.

Response: We agree with the commenter's suggestion. This provision was included in 31 CFR 33.116(b)(2)(iv) and 45 CFR 155.1316(b)(2)(iv) of the proposed regulations, and we will maintain this in the final regulations.

Comment: One commenter suggested that the Secretaries modify the proposed process to incorporate a notification of the State primary care association in any State that is requesting to waive provisions related to FQHCs, and to require the Secretaries to provide written responses related to comments on this topic, as well as explanations and supporting information related to the approval of any proposal that contains such provisions.

Response: We acknowledge the critical role that FQHCs have in providing services to low-income and other vulnerable populations. Given the potentially broad scope of section 1332 waivers, the Secretaries opted to take a broad approach to describing the Federal public notice and comment process in the proposed rules, to ensure that it would remain flexible to accommodate comments from all key stakeholders. 31 CFR 33.116(b)(1) and 45 CFR 155.1316(b)(1) specified that, ''the Secretary and the Secretary of the Treasury will provide for a public notice and comment period that is sufficient to ensure a meaningful level of public input * * *'' This will give FQHCs, ECPs, and other interested or affected stakeholders an opportunity for engagement.

Comment: One commenter expressed concerns as to whether comments from entities outside a State requesting a waiver would be applicable to the State's proposal.

Response: We recognize that entities within a State requesting a waiver are well positioned to contribute meaningful comments; we also recognize that there are entities throughout the country that will have an interest in and expertise in the topics of waiver proposals, particularly to the extent that a State's waiver proposal could affect other States. In the interests of creating a transparent process, the Secretaries will consider all comments submitted during the Federal public notice and comment period, and make decisions in accordance with the statutory criteria for approval.

2. Approval Process

Comment: One commenter suggested that the Secretaries establish a waiver review panel that consists of consumers, providers, and federal and nongovernmental technical experts to review testimony and comments and make recommendations regarding the approval of a waiver.

Response: We will consider this suggestion, along with other approaches to creating an efficient and transparent process, as we move closer to the point at which States will begin to develop section 1332 proposals.

Comment: Commenters asked for clarification on how the Secretaries would implement the 180-day Federal decision-making period. One commenter suggested that the Secretaries should allow reasonable adjustments to an application without affecting timeframes, when the adjustments are the result of State-Federal negotiations. Another commenter asked the Secretaries to clarify whether the provision allowing the Secretaries to determine an application incomplete after first determining it complete was purposeful, and asked for the Secretaries to revise this provision such that it would not affect the 180-day Federal decision-making period.

Response: The Secretaries intend to develop protocols related to the Federal decision-making process that are responsive to the needs of each State and promote efficiency and transparency. These protocols may vary from proposal to proposal, and will certainly evolve as States and the Secretaries gain additional expertise in navigating the process. We will strive to ensure clear and open lines of communication between a State and the Secretaries throughout the Federal decision-making process.

We agree with the comment regarding the allowance to modify an application without affecting the timeframe as a result of negotiation. We anticipate that this will be a regular occurrence during the Federal decision-making period, and that making agreed-upon changes as the process moves forward will facilitate an efficient process for all involved parties.

We clarify that the provision in 31 CFR 33.108(a)(2)(i)(C) and 45 CFR 155.1308(a)(2)(i)(C) of the proposed regulations was indeed purposeful in specifying that a preliminary finding that an application is complete does not preclude the Secretaries from later finding that an application is not complete. We anticipate that conversations between a State and the Secretaries may reveal additional information that is needed to evaluate whether an application meets the statutory requirements for approval. When such a situation occurs without sufficient time for the State to respond before the end of the 180-day Federal decision-making period, the Secretaries can either deny the application or find the application incomplete; we believe that the latter option provides greater flexibility to States, and reduces duplicate burden that would be placed on States and on the Federal government if an application must be

resubmitted. As such, we are maintaining this provision in the final regulations. As noted above, we intend to work closely with States to create an efficient process for waiver approval, and preserve timeframes wherever possible.

F. Monitoring and Compliance (31 CFR 33.120 and 45 CFR 155.1320)

As section 1332 waivers are likely to a have a significant impact on individuals, States and the Federal government, the proposed regulations established processes and methodologies to ensure that the Secretaries receive adequate and appropriate information regarding section 1332 waivers (consistent with section 1332(a)(4)(B)(iv) of the Affordable Care Act).

Under 31 CFR 33.120(a) and 45 CFR 155.1320(a) of the proposed regulations, a State is required to comply with all applicable Federal laws, regulations, policy statements and Departmental guidance unless a law or regulation has specifically been waived. Further, the proposed regulations required a State to come into compliance with any changes in Federal law, regulation, or policy affecting section 1332 waivers within the timeframes specified in law, regulation, interpretive policy, or guidance, unless the provision being changed is expressly waived, and to comply with the terms and conditions of the agreement entered into between the Secretaries and the State to implement a section 1332 waiver, or the section 1332 waiver would be suspended or terminated in whole or in part by the Secretaries.

Under 31 CFR 33.120(b) and 45 CFR 155.1320(b) of the proposed regulations, as part of the terms and conditions of any section 1332 waiver, a State must conduct periodic reviews related to the implementation of the waiver. The Secretaries would review, and when appropriate investigate, documented complaints that a State is failing to materially comply with requirements specified in the terms and conditions of the section 1332 waiver. In addition, the Secretaries would share with the State any complaint that has been received and notify the State of any applicable monitoring and compliance issues.

Under 31 CFR 33.120(c) and 45 CFR 155.1320(c) of the proposed regulations, to ensure continued public input after the initial six months of the waiver's implementation, and annually thereafter, States were required to hold a public forum at which members of the public have an opportunity to provide comments on the progress of the section 1332 waiver. The proposed regulation further required States to include a summary of this forum to the Secretary of HHS as part of the quarterly and annual reporting requirements under 31 CFR 33.124 and 45 CFR 155.1324.

Under 31 CFR 33.120(c)(1) and 45 CFR 155.1320(c)(1) of the proposed regulations, States were required to publish the date, time, and location of the public forum in a prominent location on the State's public Web site at least 30 days prior to the date of the planned public forum.

Under 31 CFR 33.120(d) and 45 CFR 155.1320(d) of the proposed regulations, the Secretaries reserved the right to suspend or terminate a section 1332 waiver, in whole or in part, any time before the date of expiration, if the Secretaries determined that the State materially failed to comply with the terms and conditions of the section 1332 waiver. In the event that all or a portion of a section 1332 waiver is terminated or suspended by the Secretaries, or if all or a portion of a section 1332 waiver is withdrawn, Federal funding would be limited to normal closeout costs associated with an orderly termination of the section 1332 waiver, as described in 31 CFR 33.120(e) and 45 CFR 155.1320(e).

Under 31 CFR 33.120(f) and 45 CFR 155.1320(f) of the proposed regulations, in the event that the Secretaries undertook an independent evaluation of any component of the section 1332 waiver, the State must cooperate fully with the Secretaries or the independent evaluator selected by the Secretaries. This cooperation would include, but is not limited to, the submission of all necessary data and information to the Secretaries or the independent evaluator.

We received the following comments concerning the proposed provisions regarding monitoring and compliance.

1. Post-Award Public Forum

Comment: In general, commenters supported the proposal for an annual public forum. Some commenters requested that the Secretaries provide additional detail on the post-award public forum requirement, including requiring the development of a formal advisory body similar to the Medical Care Advisory Committee (MCAC). Commenters also asked the Secretaries to clarify that the public must have an opportunity to comment at a post-award public forum, and that the Secretaries should require States to publish the date, time, and location of public forums in the State equivalent of the **Federal Register**.

Response: We believe that it is appropriate to provide a State with flexibility to determine the appropriate public forums. Consequently, we have not added a provision requiring a State to establish an advisory board. Further, given the possibility for section 1332 waivers to be broad or narrow in scope, we want to avoid requiring the creation of burdensome structures.

We agree with commenters that the public should have an opportunity to comment at a post-award public forum, which was reflected in 31 CFR 33.120(c) and 45 CFR 155.1320(c) of the proposed regulations. We are maintaining this provision in the final regulations.

We also agree that the public should have notice of a public forum. As set forth in 31 CFR 33.120(c)(1) and 45 CFR 155.1320(c)(1), a State must publish the date, time, and location of a post-award public forum in a prominent location on the State's public Web site at least 30 days prior to the forum. We believe that a State's public web site is a more effective means of communication to the public than a State's equivalent of the **Federal Register**, and as such, will maintain this provision in the final regulation. With that said, we encourage States to publish the notice of a post-award forum in other locations that will ensure appropriate public notice.

Comment: One commenter asked that the Secretaries consider delaying the initial post-award public forum and removing the requirement after 2 to 3 years of operation, with the potential to trigger forums when changes occur.

Response: We support the commenter's desire to reduce burden on States. However, we believe that post-award forums will be critical to ensuring that public has a regular opportunity to learn about and comment on the progress of a waiver. As such, we are maintaining this provision in the final regulations.

2. General

Comment: One commenter suggested that 31 CFR 33.120(a) be modified to remove the term ''interpretive guidance.'' The commenter stated that States should be subject only to ''laws, regulations, and interpretive policy that have been published and are of general applicability.

Response: We believe that the authority available to States under section 1332 demands that the Federal government have a broad set of tools for ensuring ongoing compliance with the statutory criteria for the approval of waivers and providing needed clarifications to States, including interpretive guidance. With that noted, we will work closely with States to provide as much advance notice as possible of upcoming guidance that

affects waivers, as well as to incorporate State input in crafting such guidance where possible.

Comment: A commenter asked the Secretaries to reduce Federal discretionary authority to discontinue waivers.

Response: As set forth in 31 CFR 33.120(d) and 45 CFR 155.1320(d), the Secretaries' authority to terminate or suspend a waiver is limited to situations in which the Secretaries find, ''* * * that a State has materially failed to comply with the terms of a section 1332 waiver.'' We believe that this provision is sufficiently limited and is critical to ensuring that Federal dollars are spent in accordance with applicable rules. As such, we will maintain this provision in the final regulations.

Comment: One commenter asked that the Secretaries require States to develop a transition plan that would allow the public to continue to have access to quality, affordable health care should a State's waiver be terminated or suspended.

Response: We agree that it would be useful for States to develop a transition plan, depending on the scope of the approved section 1332 waiver. We will consider including this as a standard component of the terms and conditions of an approved waiver.

Comment: One commenter asked the Secretaries to closely monitor approved waivers to ensure fair and adequate access to and payment for FQHC services.

Response: We believe that there are many areas in which monitoring will be particularly important to ensure that approved waivers continue to meet the statutory criteria for approval. To the extent possible, we will align this monitoring with each State's waiver design to reduce administrative burden.

G. State Reporting Requirements (31 CFR 33.124 and 45 CFR 155.1324)

Section 1332 of the Affordable Care Act requires that the Secretaries provide for a process for the periodic submission of reports by a State concerning the implementation of the program under a section 1332 waiver.

For the Secretaries to effectively monitor the implementation of a waiver, the proposed regulations required a State to submit a quarterly progress report in accordance with the terms and conditions of the State's section 1332 waiver. States were also required to submit an annual report, as described in 31 CFR 33.124(b) and 45 CFR 155.1324(b), documenting the following:

- The progress of the section 1332 waiver;
- Data on compliance with section 1332(b)(1)(A) through (D) of the Affordable Care Act;
- A summary of the annual post-award public forum, including all public comments received regarding the progress of the section 1332 waiver and action taken in response to such concerns or comments; and
- Other information consistent with the State's approved terms and conditions.

Under 31 CFR 33.124(c) and 45 CFR 155.1324(c) of the proposed regulations, States were required to submit a draft annual report to the Secretary of Health and Human Services no later than 90 days after the end of each waiver year. Within 60 days of receipt of comments from the Secretary of Health and Human Services, a State would be required to submit a final annual report for the waiver year to the Secretary of Health and Human Services. Finally, a State would be required to publish the draft and final annual reports on the State's public web site.

The Secretaries noted that they intended to issue future guidance under section 1332 regarding periodic reports.

We received the following comments concerning the proposed process for State reporting on approved waivers.

Comment: Several commenters requested that the Secretaries require States and the Federal government to publish quarterly and annual reports on State and Federal web sites in a timely fashion.

Response: The provisions of 31 CFR 33.124(c)(2) and 45 CFR 155.1324(c)(2) specify that a State must publish both draft and final annual reports on its public web site. We are maintaining this provision in the final regulations. We will consider the other elements of this comment in developing future guidance on reporting.

Comment: In general, commenters supported the proposed quarterly and annual reporting provisions. Some commenters requested that the Secretaries add specific reporting topics and analyses in regulation, as opposed to addressing this in future guidance.

Response: We appreciate the commenters' detailed suggestions. We are not including additional specificity in the final regulations at this time, given that the rules regarding the underlying provisions are not yet final. We will consider the specific suggestions in developing future guidance on reporting, as well as in crafting the reporting provisions that may be specific to an approved waiver.

Comment: One commenter recommended that the frequency of reporting be reduced from quarterly to semi-annual for the first 2 to 3 years of a waiver period, with annual reporting after that. The commenter also suggested that annual reports be replaced with high-level summaries after the first 2 to 3 years of a waiver period.

Response: We support the commenter's desire to reduce burden on States. However, we believe that given the potentially broad scope of section 1332 waivers, quarterly and annual reporting will be critical to ensuring that the Secretaries can exercise appropriate oversight of approved waivers, and States can formally communicate areas in which best practices have emerged or technical assistance may be needed. We also believe that such reporting is important to enable the Secretaries to calibrate future budgetary estimates. Within this construct, we intend to work with States to ensure that quarterly and annual reporting do not include duplicative or unnecessary information, and are closely aligned to the design of a State's waiver.

Comment: One commenter objected to the provision that allows the Secretaries to review a draft version of the annual report prior to its release to the public.

Response: Consistent with the practice that we are adopting for section 1115 waivers, which is specified in a concurrently issued final rule in 42 CFR 431.428(b), the provisions of 31 CFR 33.124(c)(2) and 45 CFR 155.1324(c)(2) specify that a State must publish the draft annual report on a public Web site within 30 days of submission to the Secretary of HHS. We believe that this is appropriate to allow the State to complete any internal process it has for preparing the document for publication (for example, ensuring that the document meets electronic accessibility standards) and posting it electronically. We are maintaining this provision in the final rules.

H. Periodic Evaluation Requirements (31 CFR 33.128 and 45 CFR 155.1328)

Section 1332 of the Affordable Care Act requires that the Secretaries provide for a process for the periodic evaluation of section 1332 waivers by the Secretary or Secretaries with jurisdiction over the provisions for which the waiver was granted. The proposed regulations required that each periodic evaluation include a review of all annual reports submitted by the State in accordance with 45 CFR 155.1324 and 31 CFR 33.124 that relate to the period of time covered by the evaluation.

As part of this proposed regulation, the Secretaries solicited public comments regarding specific components of the periodic evaluation

of a section 1332 waiver. The Secretaries noted that potential components of a periodic evaluation could include, but not be limited to, the impact of the waiver on the following:

- Choice of health plans for individuals and employers;
- Stability of coverage for individuals and employers;
- Small businesses, individuals with pre-existing conditions, and the low-income population;
- The overall health care system in the State; and
- Other States and the Federal Government.

The Secretaries noted that they intended to issue future guidance under section 1332 regarding periodic evaluations.

We received the following comments concerning the proposals regarding the evaluation of approved waivers.

Comment: Several commenters asked the Secretaries to include additional specific evaluation criteria in regulation, including, the use of Healthcare Effectiveness Data and Information Set (HEDIS) and the Consumer Assessment of Healthcare Providers and Systems (CAHPS); system-wide, audited quality outcome measures; and metrics on accessibility, cost, health and wellness, administrative expenses, evidence-based practices, and the impact of the waiver on individuals with pre-existing conditions and low-income populations.

Commenters also offered additional suggestions for the evaluation process, including requiring comparisons with States without waivers; requiring that evaluations be conducted by objective, independent, peer-reviewed evaluators at least every 3 years; and allowing States flexibility in constructing evaluations.

Response: We have carefully reviewed the submitted comments and will consider them as we develop guidance on this topic. We intend to work closely with States and stakeholders to ensure that evaluations are aligned with the design and goals of a State's waiver and section 1332.

Comment: Commenters asked that evaluation criteria not necessarily include choice of health plans, to allow evaluation criteria to accommodate different approaches that States may take in section 1332 waivers.

Response: The potential evaluation criteria offered in the preamble to the proposed regulations represents a starting point for the development of guidance on the evaluation of approved section 1332 waivers. We anticipate that the primary focus of the evaluation will be the four statutory criteria for approval specified in section 1332(b)(1) of the Affordable Care Act. As noted above, we intend to work closely with States to ensure that evaluations are aligned with the design and goals of a State's waiver and section 1332.

Comment: Commenters asked that the Secretaries, and not the States, conduct evaluations.

Response: We are maintaining the language in 31 CFR 33.128(a)(1) and 45 CFR 155.1328(a)(1), as the law requires periodic evaluations by the Secretaries. We will consider how best to carry out this responsibility as we develop future guidance related to the evaluation process.

I. Other Comments

We received the following comments, which were not related to a specific section of the proposed regulation.

1. Scope of Waivers

Comment: We received a number of comments that requested that the Secretaries clarify or restrict waiver authority in various ways, including prohibiting States from: imposing more stringent coverage requirements on employers; waiving the minimum coverage provision; waiving provisions related to essential community providers; granting exceptions from the medical loss ratio requirement; or affecting employer-sponsored insurance. One commenter also asked that the Secretaries emphasize the importance of preserving employer-based coverage.

In particular, a number of commenters asked the Secretaries to clarify the interaction between section 1332 waivers and the Employee Retirement Income Security Act (ERISA).

In addition, one commenter asked whether States will be permitted to use redirected premium tax credits and cost-sharing reductions to fund Health Savings Accounts (HSAs).

Response: Section 1332(a)(2) of the Affordable Care Act specifies that waiver authority is limited to parts I and II of subtitle D of the Affordable Care Act; section 1402 of the Affordable Care Act; and sections 36B, 4980H, and 5000A of the Internal Revenue Code. Further, section 1332(c) of the Affordable Care Act states while the Secretaries have broad discretion to determine the scope of a waiver, no Federal laws or requirements may be waived that are not within the Secretaries' authority. As previously noted, we encourage States to contact the Secretaries to discuss specific waiver proposals, particularly after the substantive rules subject to section 1332 waivers are finalized.

2. General

Comment: One commenter asked that the Secretaries include provisions for waiver amendments and renewals, and clarify which requirements apply in these situations. Another commenter recommended that the renewal process include a thorough reevaluation.

Response: We acknowledge that information regarding waiver amendments and renewals will be needed as we move closer to the date on which section 1332 waivers could be effective. However, amendments and renewals are beyond the purview of the proposed rules, which were limited in accordance with section 1332(a)(4)(B) of the Affordable Care Act.

Comment: A commenter asked that the Secretaries clarify that waivers are approved for a fixed timeframe.

Response: We note that section 1332(e) of the Affordable Care Act specifies that the initial term of a section 1332 waiver may not extend longer than five years.

Comment: One commenter asked how HHS will determine the total amount of Federal funding under an approved waiver.

Response: We will provide additional information on this issue as we move closer to the date on which section 1332 waivers could be effective and regulations regarding the underlying provisions are promulgated.

IV. Provisions of the Final Regulations

For the most part, these final rules incorporate the provisions of the proposed rules. Those provisions of these final rules that differ from the proposed rules are as follows:

A. Coordinated Waiver Process (31 CFR 33.102 and 45 CFR 155.1302)

We have clarified that ''section 1115 demonstration'' in 31 CFR 33.102(a) and 45 CFR 155.1302(a) refers to a demonstration under section 1115 of the Act.

We have replaced the word ''and'' with the word ''or'' in 31 CFR 33.102(b) and 45 CFR 155.1302(b) to clarify that the Secretary of Health and Human Services will transmit any proposal that requests to waive one or more of the provisions under the authority of the Secretary of the Treasury to the Secretary of the Treasury.

B. Definitions (31 CFR 33.104 and 45 CFR 155.1304)

We have revised the definition of ''Complete application'' to reflect structural changes in 31 CFR 33.108 and 45 CFR 155.1308.

C. Application Procedures (31 CFR 33.108 and 45 CFR 155.1308)

We have revised 31 CFR 33.108 and 45 CFR 155.1308 substantially to adopt a simpler structural layout. We have revised and added headings and sections for (a), (b), (c), (d), (e), and (f), now titled, ''Acceptable formats for applications''; ''Application timing''; ''Preliminary review''; ''Notification of preliminary determination''; ''Public notice of completed application''; and, ''Criteria for a complete application'', respectively. We also made changes to cross-references to reflect the new layout. With the exception of the new headings, revised cross-references, and the below modifications, all content is the same.

We have modified 31 CFR 33.108(a) and 45 CFR 155.1308(a) to remove the requirement that a State submit applications in printed format.

We have added a provision at 31 CFR 33.108(b) and 45 CFR 155.1308(b) to specify that States must submit waiver applications sufficiently in advance of the requested effective date to allow for an appropriate implementation timeline.

We have modified 31 CFR 33.108(f)(2) and 45 CFR 155.1308(f)(2) to clarify that written evidence of the State's compliance with the public notice and comment process includes, ''a description of the key issues raised during the State public notice and comment period.''

We have amended 31 CFR 33.108(f)(3)(ii) and 45 CFR 155.1308(f)(3)(ii) to clarify that the requirement to provide a copy of a law that provides the State with authority to implement the proposed waiver can be satisfied through the submission of an existing law, if such a law exists.

We have amended 31 CFR 33.108(f)(3)(iii) and 45 CFR 155.1308(f)(3)(iii) to remove the word ''brief'' from the provision describing information that States must provide regarding the rationale for a State's specific waiver requests.

We have made minor wording changes to 31 CFR 33.108(f)(3)(v)(A)–(D) and 45 CFR 155.1308(f)(3)(v)(A–D) to improve clarity.

We have added a provision at 31 CFR 33.108(f)(4)(iv) and 45 CFR 155.1308(f)(4)(iv) to specify that States must submit an implementation timeline as part of the supporting information required for a complete initial application.

We have modified 31 CFR 33.108(g)(1) and 45 CFR 155.1308(g)(1) to clarify that requests for additional information from the Secretary of the Treasury will be transmitted to a State through the Secretary of Health and Human Services, which follows the process used elsewhere in the rules.

D. General

Throughout 45 CFR 155 subpart N, we have added, ''as applicable'' after references to the Secretary of the Treasury, to clarify that the specified requirements only involve the Secretary of the Treasury to the extent that a waiver proposal or approved waiver includes a waiver of a provision under the authority of the Secretary of the Treasury.

V. Collection of Information Requirements

Under the Paperwork Reduction Act of 1995 (PRA), the Departments are required to provide notice in the **Federal Register** and solicit public comment before a collection of information requirement is approved by the Office of Management and Budget (OMB). To fairly evaluate whether an information collection should be approved by OMB, section 3506(c)(2)(A) of the PRA requires that the Departments solicit comment on the following issues:

- The need for the information collection and its usefulness in carrying out the proper functions of the Departments.
- The accuracy of the Departments' estimate of the information collection burden.
- The quality, utility, and clarity of the information to be collected.
- Recommendations to minimize the information collection burden on the affected public, including automated collection techniques.

The Departments will be able to more accurately estimate the burden until the provisions that section 1332 authorizes the Secretaries to waive pursuant to an application by a State take effect in 2014. The Departments solicited public comments on the annual number of waiver applications that the Departments may receive, but did not receive any responses. With that said, the Departments developed estimates of the burden associated with information collection requirements in the proposed regulations, and has modified them based on the below comments. Further, the burden estimates provided are estimated averages, and the actual burden will vary based on the scope of the waiver and the State's existing infrastructure for these activities.

We received the following comments on information collection requirements.

Comment: One commenter asked that we estimate the number of States that will seek waivers.

Response: We solicited comment on this in the proposed rules, and did not receive any responses. Given the lack of response and length of time before the earliest possible effective date for section 1332 waivers, the Secretaries have no way to accurately quantify the number of States that will seek waivers. With that said, we believe that the per-State burden estimates provided in the proposed rule provide adequate information regarding the collections related to these rules. As such, for the purpose of this estimate, we use one State.

Comment: One commenter asked that we explain the average wage used in the burden analyses. Another suggested that the calculated burden estimates were too low.

Response: We have revisited the average wage used and agree with the commenter that it was too low. We have also revisited some of the estimates of the number of hours and adjusted them. The combined impact of these changes is to increase the overall burden estimate, both in terms of hours and dollars. We have recomputed the average wage based on a 75 percent/25 percent blend for a Management Analyst (Occupation No. 13–1111 in the Bureau of Labor Statistics' May 2010 National Occupational Employment and Wage Estimate; Industry: State Government; Category: Business and Financial Operations Occupations) and a General and Operations Manager (Occupation No. 11–1021 in the May 2010 Bureau of Labor Statistics' National Occupational Employment and Wage Estimate; Industry: State Government; Category: Management Occupations). We believe that this better reflects wages for these activities by using actual average wages for State government employees at an expected staff/management mix. In addition, we have incorporated a factor of 31.2 percent to account for additional employer costs (paid leave, supplemental pay, insurance, retirement and savings, and legally-required benefits) by using the State and local government rate for such costs for management, professional, and related workers from the Bureau of Labor Statistics' September 2011 Employer Costs for Employee Compensation survey. By using this methodology, we have revised the average wage from $20.67 per hour to $46.67 per hour, which results in commensurate increases to all of the burden estimates.

The Departments solicited public comment on each of these issues for the following sections of this document that

contain information collection requirements (ICRs):

A. ICRs Regarding the Coordinated Waiver Process (31 CFR 33.102 and 45 CFR 155.1302) and Application Procedures (31 CFR 33.108 and 45 CFR 155.1308)

Under certain conditions, 31 CFR 33.102 and 45 CFR 155.1302(a) and (b) provide that a State may submit a single application for a waiver under section 1332 of the Affordable Care Act and a waiver under one or more of the existing waiver processes applicable under titles XVIII, XIX, and XXI of the Act, or under any other Federal law relating to the provision of health care items or services. 31 CFR 33.108 and 45 CFR 155.1308 establish the application process for section 1332 waivers. Under 31 CFR 33.108(a) and 45 CFR 155.1308(a), a State's application for approval of a section 1332 waiver must be submitted to the Secretary as an electronic document. Paragraph (f) of 31 CFR 33.108 and 45 CFR 155.1308 specifies that an application for a section 1332 waiver will not be considered complete unless the application meets all of the conditions set out those sections.

The burden associated with the requirements in 31 CFR 33.102 and 33.108 and 45 CFR 155.1302 and 155.1308 is the time and effort necessary for a State to develop and submit a complete application for a section 1332 waiver. The Departments estimate that it will take 400 hours for a State to develop and submit a complete section 1332 waiver application, at a cost of $18,668.

B. ICRs Regarding State Public Notice Requirements (31 CFR 33.112 and 45 CFR 155.1312)

Paragraph (a) of 31 CFR 33.112 and 45 CFR 155.1312 require a State to provide a public notice and comment period prior to submitting an application for a section 1332 waiver.

The public notice must address the information requirements listed in paragraphs (b)(1) through (4) of 31 CFR 33.112 and 45 CFR 155.1312. The burden estimate associated with the requirements in paragraph (a)(1) and (b) of this section is the time and effort necessary to develop and provide public notice and obtain and consider public comments. The Departments estimate that each State submitting an application for a section 1332 waiver will require 80 hours to comply with the requirements in this section, at a total cost of $3,734 per State.

Paragraph (a)(2) of 31 CFR 33.112 and 45 CFR 155.1312 require States with 1 or more Federally-recognized Indian tribes to consult with such tribes before submitting a section 1332 waiver application. Paragraph (f)(2) of 31 CFR 33.108 and 45 CFR 155.1308 explain that documentation of the State's public notice, which incorporates this consultation, must be included in the waiver application.

The burden associated with these requirements is both the time and effort necessary for a State to conduct its tribal consultations and the time and effort necessary to notify CMS of the State's compliance with paragraph (f)(2) of 31 CFR 33.108 and 45 CFR 155.1308. The Departments estimate that each State with federally recognized tribes that submits an application for a section 1332 waiver will require 40 hours to both conduct its tribal consultations and to submit the aforementioned evidence to CMS, at a total cost of $1,867.

Paragraph (c) of 31 CFR 33.112 and 45 CFR 155.1312 specify that after issuing the public notice and prior to submitting an application for a section 1332 waiver, a State must conduct public hearings regarding the State's waiver application. While this requirement is subject to the PRA, the Departments believe the associated burden is exempt under 5 CFR 1320.3(h)(4). Facts or opinions submitted in response to general solicitations of comments from the public, published in the **Federal Register** or other publications, regardless of the form or format thereof, provided that no person is required to supply specific information pertaining to the commenter, other than that necessary for self-identification, as a condition of the agency's full consideration of the comment are not subject to the PRA.

C. ICRs Regarding Monitoring and Compliance (31 CFR 33.120 and 45 CFR 155.1320)

31 CFR 33.120(b) and 45 CFR 155.1320(b) require States to periodically perform reviews of the implementation of the section 1332 waiver. The Departments estimate that it will take a State 80 hours annually to periodically review the waiver's implementation, at a total cost of $3,734.

Paragraph (c) of 31 CFR 33.120 and 45 CFR 155.1320 further specifies that at least 6 months after the implementation date of the waiver and annually thereafter, the State must hold a public forum to solicit comments on the progress of a section 1332 waiver. As specified in paragraph (c)(1) of 31 CFR 33.120 and 45 CFR 155.1320, the State must publish the date, time, and location of the public forum in a prominent location on the State's public Web site, at least 30 days prior to the date of the planned public forum.

The burden associated with these provisions includes the time and effort necessary to conduct the public meeting and the time and effort necessary for a State to publish the date, time, and location of the public forum in a prominent location on the State's public Web site, at least 30 days prior to the date of the planned public forum. While these requirements are subject to the PRA, the Departments believe the associated burden is exempt from the PRA. As discussed previously in this collection, facts or opinions submitted in response to general solicitations of comments from the public, published in the **Federal Register** or other publications, regardless of the form or format thereof, provided that no person is required to supply specific information pertaining to the commenter, other than that necessary for self-identification, as a condition of the agency's full consideration of the comment are not subject to the PRA. Therefore, the burden associated with the annual public hearing requirement is exempt. Similarly, the Departments believe the time and effort necessary for a State to publish the date, time, and location of the public forum in a prominent location on the State's public Web site is a burden that would be incurred in the course of usual and customary State business practices and is therefore exempt from the PRA under 5 CFR 1320.3(b)(3).

D. ICRs Regarding State Reporting Requirements (31 CFR 33.124 and 45 CFR 155.1324)

Paragraph (a) of 31 CFR 33.124 and 45 CFR 155.1324 requires States to submit quarterly reports to CMS in accordance with the terms and conditions of a State's approved section 1332 waiver. The burden associated with this reporting requirement is the time and effort necessary to develop and submit quarterly reports to CMS. The Departments estimate that it will take 10 hours per quarter for each State to comply with this reporting requirement, for a total of 40 hours per year, at a total annual cost of $3,734.

Paragraph (b) of 31 CFR 33.124 and 45 CFR 155.1324 requires States to submit annual reports to CMS documenting the information listed in paragraphs (b)(1) through (4) of 31 CFR 33.124 and 45 CFR 155.1324. As part of the submission process, paragraph (c) of 31 CFR 33.124 and 45 CFR 155.1324 requires States to submit draft annual reports to CMS no later than 90 days after the end of each

waiver year, or as specified in the State's terms and conditions. The burden associated with this reporting requirement is the time and effort necessary to develop and submit draft annual reports to CMS. The Departments estimate that it will take 40 hours for each State to comply with this reporting requirement, at a total cost of $1,867.

Paragraph (c)(1) of 31 CFR 33.124 and 45 CFR 155.1324 specifies that within 60 days of receipt of comments from CMS, the State must submit to CMS the final annual report for the waiver year. While this requirement is subject to the PRA, the Departments believe the associated burden is exempt under 5 CFR 1320.3(h)(9). Facts or opinions obtained or solicited through non-standardized follow-up questions designed to clarify responses to approved collections of information are not subject to the PRA.

Paragraph (c)(2) of 31 CFR 33.124 and 45 CFR 155.1324 specify that the draft and final annual reports must be published on the State's public Web site. The burden associated with this is the time and effort required for a State to post the aforementioned information on the State's public Web site. The Departments estimate that it will take 4 hours for each State to comply with this requirement, at a total cost of $187.

E. ICRs Regarding Periodic Evaluation Requirements (31 CFR 33.128 and 45 CFR 155.1328)

31 CFR 33.128 and 45 CFR 155.1328 specify that the Secretary of Health and Human Services and the Secretary of the Treasury shall periodically evaluate the implementation of section 1332 waivers. The Departments recognize that evaluation will likely involve information collections, but are not seeking OMB approval for collections related to this provision at this time. The Departments will seek OMB approval, as needed, once it develops guidance for States regarding this evaluation requirement. Such approval will be requested following the 60- and 30-day comment periods required by the PRA.

TABLE 1—ESTIMATED ANNUAL RECORDKEEPING AND REPORTING BURDEN

Regulation section(s)	OMB Control No.	Respondents	Responses	Burden per response (hours)	Total annual burden (hours)	Hourly labor cost of reporting ($)	Total labor cost of reporting ($)	Total capital/ maintenance costs ($)	Total cost ($)
31 CFR 33.108 and 45 CFR 155.1308.	0938–New ..	1	1	400	400	46.67	$18,668	0	$18,668
Paragraph (a)(1) of 31 CFR 33.112 and 45 CFR 155.1312.	0938–New ..	1	1	80	80	46.67	3,734	0	3,734
Paragraph (a)(2) of 31 CFR 33.112 and 45 CFR 155.1312.	0938–New ..	1	1	40	40	46.67	1,867	0	1,867
Paragraph (b)(1) of 31 CFR 33.120 and 45 CFR 155.1320.	0938–New ..	1	1	80	80	46.67	3,734	0	3,734
Paragraph (a) of 31 CFR 33.124 and 45 CFR 155.1324.	0938–New ..	1	4	10	40	46.67	1,867	0	1,867
Paragraph (b) of 31 CFR 33.124 and 45 CFR 155.1324.	0938–New ..	1	1	40	40	46.67	1,867	0	1,867
Paragraph (c)(2) of 31 CFR 33.124 and 45 CFR 155.1324.	0938–New ..	1	1	4	4	46.67	187	0	187
Total	.....	1	10	.....	684	.....	31,922	0	31,922

If you comment on these information collection and recordkeeping requirements, please submit your comments to the Office of Information and Regulatory Affairs, Office of Management and Budget, *Attention:* CMS Desk Officer, [CMS–9987–F], *Fax:* (202) 395–6974; or *Email: OIRA_submission@omb.eop.gov.*

An agency may not conduct or sponsor, and a person is not required to respond to, a collection of information unless it obtains a control number assigned by OMB.

VI. Regulatory Impact Statement

The Departments have examined the impacts of these final rules as required by Executive Order 13563 on Improving Regulation and Regulatory Review (January 18, 2011), Executive Order 12866 on Regulatory Planning and Review (September 30, 1993), the Regulatory Flexibility Act (RFA) (5 U.S.C. 601 *et seq.*), section 202 of the Unfunded Mandates Reform Act of 1995 (Pub. L. 104–4), Executive Order 13132 on Federalism (August 4, 1999), and the Congressional Review Act (5 U.S.C. 804(2)).

Executive Order 12866 directs agencies to assess all costs and benefits of available regulatory alternatives and, if regulation is necessary, to select regulatory approaches that maximize net benefits (including potential economic, environmental, public health and safety effects, distributive impacts, and equity). These rules have been designated ''significant regulatory actions'' although not economically significant, under section 3(f) of Executive Order 12866. Accordingly, these rules have been reviewed by the Office of Management and Budget.

The RFA requires agencies to analyze options for regulatory relief for small entities, if a rule has a significant economic impact on a substantial number of small entities. For purposes of the RFA, small entities include small businesses, nonprofit organizations, and small governmental jurisdictions. Most hospitals and most other health care providers and suppliers are small entities, either by being nonprofit organizations or by meeting the SBA definition of a small business and having revenues of less than $7 million to $34.5 million in any 1 year. (For details, see the Small Business Administration's final rule that set forth size standards for health care industries, at 65 FR 69432, November 17, 2000). Individuals and States are not included

in the definition of a small entity. The Departments are not preparing an analysis for the RFA because the Departments have determined, and the Secretaries certify, that these final rules will not have a significant economic impact on a substantial number of small entities.

Section 202 of the Unfunded Mandates Reform Act of 1995 (UMRA) (Pub. L. 104–4) also requires that agencies assess anticipated costs and benefits before issuing any rule whose mandates require spending in any 1 year of $100 million or more in 1995 dollars, updated annually for inflation. In 2011, that threshold is approximately $136 million. Because these rules do not mandate State participation in section 1332 waivers, there is no obligation for the State to make any change to their existing programs. As a result, there is no mandate for the State. Therefore, the Departments estimate these rules will not mandate expenditures in the threshold amount of $136 million in any 1 year.

Executive Order 13132 establishes certain requirements that an agency must meet when it promulgates a proposed rule (and subsequent final rule) that imposes substantial direct requirement costs on State and local governments, preempts State law, or otherwise has Federalism implications. Since these regulations would not impose costs on State or local governments, the requirements of Executive Order 13132 are not applicable. In accordance with the provisions of Executive Order 12866, these regulations were reviewed by the Office of Management and Budget.

List of Subjects

31 CFR Part 33

Health care, Health insurance, Reporting and recordkeeping requirements.

45 CFR Part 155

Health care, Health insurance, Reporting and recordkeeping requirements.

Department of the Treasury

31 CFR Subtitle A

For the reasons set forth in the preamble, the Department of the Treasury amends 31 CFR subtitle A by adding part 33 to read as follows:

PART 33—WAIVERS FOR STATE INNOVATION

Sec.

33.100 Basis and purpose.
33.102 Coordinated waiver process.
33.104 Definitions.
33.108 Application procedures.
33.112 State public notice requirements.
33.116 Federal public notice and approval process.
33.120 Monitoring and compliance.
33.124 State reporting requirements.
33.128 Periodic evaluation requirements.

Authority: Sec. 1332, Pub. L. 111–148, 124 Stat. 119.

§ 33.100 Basis and purpose.

(a) *Statutory basis.* This part implements provisions of section 1332 of the Patient Protection and Affordable Care Act (Affordable Care Act), Public Law 111–148, relating to Waivers for State Innovation, which the Secretary may authorize for plan years beginning on or after January 1, 2017. Section 1332 of the Affordable Care Act requires the Secretary to issue regulations that provide for all of the following:

(1) A process for public notice and comment at the State level, including public hearings, sufficient to ensure a meaningful level of public input.

(2) A process for the submission of an application that ensures the disclosure of all of the following:

(i) The provisions of law that the State involved seeks to waive.

(ii) The specific plans of the State to ensure that the waiver will meet all requirements specified in section 1332 of the Affordable Care Act.

(3) A process for the provision of public notice and comment after a waiver application is received by the Secretary of Health and Human Services, that is sufficient to ensure a meaningful level of public input and that does not impose requirements that are in addition to, or duplicative of, requirements imposed under the Administrative Procedures Act, or requirements that are unreasonable or unnecessarily burdensome with respect to State compliance.

(4) A process for the submission of reports to the Secretary by a State relating to the implementation of a waiver.

(5) A process for the periodic evaluation by the Secretary of programs under waivers.

(b) *Purpose.* This part sets forth certain procedural requirements for Waivers for State Innovation under section 1332 of the Affordable Care Act.

§ 33.102 Coordinated waiver process.

(a) *Coordination with applications for waivers under other Federal laws.* A State may submit a single application to the Secretary of Health and Human Services for a waiver under section 1332 of the Affordable Care Act and a waiver under one or more of the existing waiver processes applicable under titles XVIII, XIX, and XXI of the Social Security Act, or under any other Federal law relating to the provision of health care items or services, provided that such application is consistent with the procedures described in this part, the procedures for demonstrations under section 1115 of the Social Security Act, if applicable, and the procedures under any other applicable Federal law under which the State seeks a waiver.

(b) *Coordinated process for section 1332 waivers.* A State seeking a section 1332 waiver must submit a waiver application to the Secretary of Health and Human Services. Any application submitted to the Secretary of Health and Human Services that requests to waive sections 36B, 4980H, or 5000A of the Internal Revenue Code, in accordance with section 1332(a)(2)(D) of the Affordable Care Act, shall upon receipt be transmitted by the Secretary of Health and Human Services to the Secretary to be reviewed in accordance with this part.

§ 33.104 Definitions.

For the purposes of this part:

Complete application means an application that has been submitted and for which the Secretary and the Secretary of Health and Human Services have made a preliminary determination that it includes all required information and satisfies all requirements that are described in § 33.108(f).

Public notice means a notice issued by a government agency or legislative body that contains sufficient detail to notify the public at large of a proposed action consistent with § 33.112.

Section 1332 waiver means a Waiver for State Innovation under section 1332 of the Affordable Care Act.

§ 33.108 Application procedures.

(a) *Acceptable formats for applications.* Applications for initial approval of a section 1332 waiver shall be submitted in electronic format to the Secretary of Health and Human Services.

(b) *Application timing.* Applications for initial approval of a section 1332 waiver must be submitted sufficiently in advance of the requested effective date to allow for an appropriate implementation timeline.

(c) *Preliminary review.* Each application for a section 1332 waiver will be subject to a preliminary review by the Secretary and the Secretary of Health and Human Services, who will make a preliminary determination that the application is complete. A submitted application will not be deemed received until the Secretary and the Secretary of Health and Human Services have made the preliminary

determination that the application is complete.

(1) The Secretary and the Secretary of Health and Human Services will complete the preliminary review of the application within 45 days after it is submitted.

(2) If the Secretary and the Secretary of Health and Human Services determine that the application is not complete, the Secretary of Health and Human Services will send the State a written notice of the elements missing from the application.

(3) The preliminary determination that an application is complete does not preclude a finding during the 180-day Federal decision-making period that a necessary element of the application is missing or insufficient.

(d) *Notification of preliminary determination.* Upon making the preliminary determination that an application is complete, as defined in this part, the Secretary of Health and Human Services will send the State a written notice informing the State that the Secretary and the Secretary of Health and Human Services have made such a preliminary determination. That date will also mark the beginning of the Federal public notice process and the 180-day Federal decision-making period.

(e) *Public notice of completed application.* Upon receipt of a complete application for an initial section 1332 waiver, the Secretary of Health and Human Services will—

(1) Make available to the public the application, and all related State submissions, including all supplemental information received from the State following the receipt of a complete application for a section 1332 waiver.

(2) Indicate the status of the application.

(f) *Criteria for a complete application.* An application for initial approval of a section 1332 waiver will not be considered complete unless the application meets all of the following conditions:

(1) Complies with paragraphs (a) through (f) of this section.

(2) Provides written evidence of the State's compliance with the public notice requirements set forth in § 33.112, including a description of the key issues raised during the State public notice and comment period.

(3) Provides all of the following:

(i) A comprehensive description of the State legislation and program to implement a plan meeting the requirements for a waiver under section 1332;

(ii) A copy of the enacted State legislation that provides the State with authority to implement the proposed waiver, as required under section 1332(a)(1)(C) of the Affordable Care Act;

(iii) A list of the provisions of law that the State seeks to waive, including a description of the reason for the specific requests; and

(iv) The analyses, actuarial certifications, data, assumptions, analysis, targets and other information set forth in paragraph (f)(4) of this section sufficient to provide the Secretary and the Secretary of Health and Human Services with the necessary data to determine that the State's proposed waiver:

(A) As required under section 1332(b)(1)(A) of the Affordable Care Act (the comprehensive coverage requirement), will provide coverage that is at least as comprehensive as the coverage defined in section 1302(b) of the Affordable Care Act and offered through Exchanges established under the Affordable Care Act as certified by the Office of the Actuary of the Centers for Medicare & Medicaid Services based on sufficient data from the State and from comparable States about their experience with programs created by the Affordable Care Act and the provisions of the Affordable Care Act that the State seeks to waive;

(B) As required under section 1332(b)(1)(B) of the Affordable Care Act (the affordability requirement), will provide coverage and cost sharing protections against excessive out-of-pocket spending that are at least as affordable as the provisions of Title I of the Affordable Care Act would provide;

(C) As required under section 1332(b)(1)(C) of the Affordable Care Act (the scope of coverage requirement), will provide coverage to at least a comparable number of its residents as the provisions of Title I of the Affordable Care Act would provide; and

(D) As prohibited under section 1332(b)(1)(D) of the Affordable Care Act (the Federal deficit requirement), will not increase the Federal deficit.

(4) Contains the following supporting information:

(i) *Actuarial analyses and actuarial certifications.* Actuarial analyses and actuarial certifications to support the State's estimates that the proposed waiver will comply with the comprehensive coverage requirement, the affordability requirement, and the scope of coverage requirement.

(ii) *Economic analyses.* Economic analyses to support the State's estimates that the proposed waiver will comply with the comprehensive coverage requirement, the affordability requirement, the scope of coverage requirement and the Federal deficit requirement, including:

(A) A detailed 10-year budget plan that is deficit neutral to the Federal government, as prescribed by section 1332(a)(1)(B)(ii) of the Affordable Care Act, and includes all costs under the waiver, including administrative costs and other costs to the Federal government, if applicable; and

(B) A detailed analysis regarding the estimated impact of the waiver on health insurance coverage in the State.

(iii) *Data and assumptions.* The data and assumptions used to demonstrate that the State's proposed waiver is in compliance with the comprehensive coverage requirement, the affordability requirement, the scope of coverage requirement and the Federal deficit requirement, including:

(A) Information on the age, income, health expenses and current health insurance status of the relevant State population; the number of employers by number of employees and whether the employer offers insurance; cross-tabulations of these variables; and an explanation of data sources and quality; and

(B) An explanation of the key assumptions used to develop the estimates of the effect of the waiver on coverage and the Federal budget, such as individual and employer participation rates, behavioral changes, premium and price effects, and other relevant factors.

(iv) *Implementation timeline.* A detailed draft timeline for the State's implementation of the proposed waiver.

(v) *Additional information.* Additional information supporting the State's proposed waiver, including:

(A) An explanation as to whether the waiver increases or decreases the administrative burden on individuals, insurers, and employers, and if so, how and why;

(B) An explanation of how the waiver will affect the implementation of the provisions of the Affordable Care Act which the State is not requesting to waive in the State and at the Federal level;

(C) An explanation of how the waiver will affect residents who need to obtain health care services out-of-State, as well as the States in which such residents may seek such services;

(D) If applicable, an explanation as to how the State will provide the Federal government with all information necessary to administer the waiver at the Federal level; and

(E) An explanation of how the State's proposal will address potential individual, employer, insurer, or

provider compliance, waste, fraud and abuse within the State or in other States.

(vi) *Reporting targets.* Quarterly, annual, and cumulative targets for the comprehensive coverage requirement, the affordability requirement, the scope of coverage requirement, and the Federal deficit requirement.

(vii) *Other information.* Other information consistent with guidance provided by the Secretary and the Secretary of Health and Human Services.

(g) *Additional supporting information.* (1) During the Federal review process, the Secretary may request additional supporting information from the State via the Secretary of Health and Human Services as needed to address public comments or to address issues that arise in reviewing the application.

(2) Requests for additional information, and responses to such requests, will be made available to the public in the same manner as information described in § 33.116(b).

§ 33.112 State public notice requirements.

(a) *General.* (1) Prior to submitting an application for a new section 1332 waiver to the Secretary of Health and Human Services for review and consideration, a State must provide a public notice and comment period sufficient to ensure a meaningful level of public input for the application for a section 1332 waiver.

(2) Such public notice and comment period shall include, for a State with one or more Federally-recognized Indian tribes within its borders, a separate process for meaningful consultation with such tribes.

(b) *Public notice and comment period.* The State shall make available at the beginning of the public notice and comment period, through its Web site or other effective means of communication, and shall update as appropriate, a public notice that includes all of the following:

(1) A comprehensive description of the application for a section 1332 waiver to be submitted to the Secretary of Health and Human Services including information and assurances related to all statutory requirements and other information consistent with guidance provided by the Secretary and the Secretary of Health and Human Services.

(2) Information relating to where copies of the application for a section 1332 waiver are available for public review and comment.

(3) Information relating to how and where written comments may be submitted and reviewed by the public, and the timeframe during which comments will be accepted.

(4) The location, date, and time of public hearings that will be convened by the State to seek public input on the application for a section 1332 waiver.

(c) *Public hearings.* (1) After issuing the public notice and prior to submitting an application for a new section 1332 waiver, a State must conduct public hearings regarding the State's application.

(2) Such public hearings shall provide an interested party the opportunity to learn about and comment on the contents of the application for a section 1332 waiver.

(d) *Submission of initial application.* After the State public notice and comment period has concluded, the State may submit an application to the Secretary of Health and Human Services for an initial waiver in accordance with the requirements set forth in § 33.108.

§ 33.116 Federal public notice and approval process.

(a) *General.* The Federal public notice and approval process begins on the first business day after the Secretary and the Secretary of Health and Human Services determine that all elements for a complete application were documented and submitted to the Secretary of Health and Human Services.

(b) *Public notice and comment period.* (1) Following a determination that a State's application for a section 1332 waiver is complete, the Secretary and the Secretary of Health and Human Services will provide for a public notice and comment period that is sufficient to ensure a meaningful level of public input and that does not impose requirements that are in addition to, or duplicative of, requirements imposed under the Administrative Procedures Act, or requirements that are unreasonable or unnecessarily burdensome with respect to State compliance.

(2) At the beginning of the Federal notice and comment period, the Secretary of Health and Human Services will make available through its Web site and otherwise, and shall update as appropriate, public notice that includes all of the following:

(i) The complete application for a section 1332 waiver, updates for the status of the State's application, and any supplemental materials received from the State prior to and during the Federal public notice and comment period.

(ii) Information relating to where copies of the application for a section 1332 waiver are available for public review and comment.

(iii) Information relating to how and where written comments may be submitted and reviewed by the public, and the timeframe during which comments will be accepted.

(iv) Any public comments received during the Federal public notice and comment period.

(c) *Approval of a section 1332 waiver application.* The final decision of the Secretary and the Secretary of Health and Human Services on a State application for a section 1332 waiver will be issued by the Secretary of Health and Human Services no later than 180 days after the determination by the Secretary and the Secretary of Health and Human Services that a complete application was received in accordance with § 33.108.

§ 33.120 Monitoring and compliance.

(a) *General.* (1) Following the issuance of a final decision to approve a section 1332 waiver by the Secretary and the Secretary of Health and Human Services, a State must comply with all applicable Federal laws, regulations, interpretive policy statements and interpretive guidance unless expressly waived. A State must, within the timeframes specified in law, regulation, policy, or guidance, come into compliance with any changes in Federal law, regulation, or policy affecting section 1332 waivers, unless the provision changed is expressly waived.

(2) A State must comply with the terms and conditions of the agreement between the Secretary, the Secretary of Health and Human Services, and the State to implement a section 1332 waiver.

(b) *Implementation reviews.* (1) The terms and conditions of an approved section 1332 waiver will provide that the State will perform periodic reviews of the implementation of the section 1332 waiver.

(2) The Secretary and the Secretary of Health and Human Services will review documented complaints that a State is failing to comply with requirements specified in the terms and conditions of any approved section 1332 waiver.

(3) The Secretary and the Secretary of Health and Human Services will promptly share with a State any complaint that the Secretary and the Secretary of Health and Human Services has received and will also provide notification of any applicable monitoring and compliance issues.

(c) *Post award.* Within 6 months after the implementation date of a section 1332 waiver and annually thereafter, a State must hold a public forum to solicit comments on the progress of a section 1332 waiver. The State must hold the

public forum at which members of the public have an opportunity to provide comments and must provide a summary of the forum to the Secretary of Health and Human Services as part of the quarterly report specified in § 33.124(a) that is associated with the quarter in which the forum was held, as well as in the annual report specified in § 33.124(b) that is associated with the year in which the forum was held.

(1) The State must publish the date, time, and location of the public forum in a prominent location on the State's public Web site, at least 30 days prior to the date of the planned public forum.

(2) [Reserved]

(d) *Terminations and suspensions.* The Secretary and the Secretary of Health and Human Services reserve the right to suspend or terminate a section 1332 waiver in whole or in part, at any time before the date of expiration, whenever the Secretaries determine that a State has materially failed to comply with the terms of a section 1332 waiver.

(e) *Closeout costs.* If all or part of a section 1332 waiver is terminated or suspended, or if a portion of a section 1332 waiver is withdrawn, Federal funding is limited to normal closeout costs associated with an orderly termination, suspension, or withdrawal, including service costs during any approved transition period, and administrative costs of disenrolling participants.

(f) *Federal evaluators.* (1) A State must fully cooperate with the Secretary, the Secretary of Health and Human Services, or an independent evaluator selected by the Secretary or the Secretary of Health and Human Services to undertake an independent evaluation of any component of a section 1332 waiver.

(2) As part of this required cooperation, a State must submit all requested data and information to the Secretary, the Secretary of Health and Human Services, or the independent evaluator.

§ 33.124 State reporting requirements.

(a) *Quarterly reports.* A State must submit quarterly reports to the Secretary of Health and Human Services in accordance with the terms and conditions of the State's section 1332 waiver. These quarterly reports must include, but are not limited to, reports of any ongoing operational challenges and plans for and results of associated corrective actions.

(b) *Annual reports.* A State must submit an annual report to the Secretary of Health and Human Services documenting all of the following:

(1) The progress of the section 1332 waiver.

(2) Data on compliance with section 1332(b)(1)(A) through (D) of the Affordable Care Act.

(3) A summary of the annual post-award public forum, held in accordance with § 33.120(c), including all public comments received at such forum regarding the progress of the section 1332 waiver and action taken in response to such concerns or comments.

(4) Other information consistent with the State's approved terms and conditions.

(c) *Submitting and publishing annual reports.* A State must submit a draft annual report to the Secretary of Health and Human Services no later than 90 days after the end of each waiver year, or as specified in the waiver's terms and conditions.

(1) Within 60 days of receipt of comments from the Secretary of Health and Human Services, a State must submit to the Secretary of Health and Human Services a final annual report for the waiver year.

(2) The draft and final annual reports are to be published on a State's public Web site within 30 days of submission to and approval by the Secretary of Health and Human Services, respectively.

§ 33.128 Periodic evaluation requirements.

(a) The Secretary and the Secretary of Health and Human Services shall periodically evaluate the implementation of a program under a section 1332 waiver consistent with guidance published by the Secretary and the Secretary of Health and Human Services and any terms and conditions governing the section 1332 waiver.

(b) Each periodic evaluation must include a review of the annual report or reports submitted by the State in accordance with § 33.124 that relate to the period of time covered by the evaluation.

Department of Health and Human Services

45 CFR Subtitle A

For the reasons set forth in the preamble, the Department of Health and Human Services amends 45 CFR subtitle A, subchapter B by adding part 155 to read as follows:

PART 155—WAIVERS FOR STATE INNOVATION

Subparts A Through M [Reserved]

Subpart N—State Flexibility

Sec.

155.1300 Basis and purpose.
155.1302 Coordinated waiver process.
155.1304 Definitions.
155.1308 Application procedures.
155.1312 State public notice requirements.
155.1316 Federal public notice and approval process.
155.1320 Monitoring and compliance.
155.1324 State reporting requirements.
155.1328 Periodic evaluation requirements.

Authority: Sec. 1332, Pub. L. 111–148, 124 Stat. 119.

Subparts A Through M [Reserved]

Subpart N—State Flexibility

§ 155.1300 Basis and purpose.

(a) *Statutory basis.* This subpart implements provisions of section 1332 of the Affordable Care Act, relating to Waivers for State Innovation, which the Secretary may authorize for plan years beginning on or after January 1, 2017. Section 1332 of the Affordable Care Act requires the Secretary to issue regulations that provide for all of the following:

(1) A process for public notice and comment at the State level, including public hearings, sufficient to ensure a meaningful level of public input.

(2) A process for the submission of an application that ensures the disclosure of all of the following:

(i) The provisions of law that the State involved seeks to waive.

(ii) The specific plans of the State to ensure that the waiver will meet all requirements specified in section 1332.

(3) A process for the provision of public notice and comment after a waiver application is received by the Secretary, that is sufficient to ensure a meaningful level of public input and that does not impose requirements that are in addition to, or duplicative of, requirements imposed under the Administrative Procedures Act, or requirements that are unreasonable or unnecessarily burdensome with respect to State compliance.

(4) A process for the submission of reports to the Secretary by a State relating to the implementation of a waiver.

(5) A process for the periodic evaluation by the Secretary of programs under waivers.

(b) *Purpose.* This subpart sets forth certain procedural requirements for Waivers for State Innovation under section 1332 of the Affordable Care Act.

§ 155.1302 Coordinated waiver process.

(a) *Coordination with applications for waivers under other Federal laws.* A State may submit a single application to the Secretary for a waiver under section 1332 of the Affordable Care Act and a waiver under one or more of the existing waiver processes applicable under titles

XVIII, XIX, and XXI of the Act, or under any other Federal law relating to the provision of health care items or services, provided that such application is consistent with the procedures described in this part, the procedures for demonstrations under section 1115 of the Act, if applicable, and the procedures under any other applicable Federal law under which the State seeks a waiver.

(b) *Coordinated process for section 1332 waivers.* A State seeking a section 1332 waiver must submit a waiver application to the Secretary. Any application submitted to the Secretary that requests to waive sections 36B, 4980H, or 5000A of the Code, in accordance with section 1332(a)(2)(D) of the Affordable Care Act, shall upon receipt be transmitted by the Secretary to the Secretary of the Treasury to be reviewed in accordance with 31 CFR Part 33.

§ 155.1304 Definitions.

For the purposes of this subpart:

Complete application means an application that has been submitted and for which the Secretary and the Secretary of the Treasury, as applicable, have made a preliminary determination that it includes all required information and satisfies all requirements that are described in § 155.1308(f).

Public notice means a notice issued by a government agency or legislative body that contains sufficient detail to notify the public at large of a proposed action consistent with § 155.1312.

Section 1332 waiver means a Waiver for State Innovation under section 1332 of the Affordable Care Act.

§ 155.1308 Application procedures.

(a) *Acceptable formats for applications.* Applications for initial approval of a section 1332 waiver shall be submitted in electronic format to the Secretary.

(b) *Application timing.* Applications for initial approval of a section 1332 waiver must be submitted sufficiently in advance of the requested effective date to allow for an appropriate implementation timeline.

(c) *Preliminary review.* Each application for a section 1332 waiver will be subject to a preliminary review by the Secretary and the Secretary of the Treasury, as applicable, who will make a preliminary determination that the application is complete. A submitted application will not be deemed received until the Secretary and the Secretary of the Treasury, as applicable, have made the preliminary determination that the application is complete.

(1) The Secretary and the Secretary of the Treasury, as applicable, will complete the preliminary review of the application within 45 days after it is submitted.

(2) If the Secretary and the Secretary of the Treasury, as applicable, determine that the application is not complete, the Secretary will send the State a written notice of the elements missing from the application.

(3) The preliminary determination that an application is complete does not preclude a finding during the 180-day Federal decision-making period that a necessary element of the application is missing or insufficient.

(d) *Notification of preliminary determination.* Upon making the preliminary determination that an application is complete, as defined in this part, the Secretary will send the State a written notice informing the State that the Secretary and the Secretary of the Treasury, as applicable, have made such a preliminary determination. That date will also mark the beginning of the Federal public notice process and the 180-day Federal decision-making period.

(e) *Public notice of completed application.* Upon receipt of a complete application for an initial section 1332 waiver, the Secretary will—

(1) Make available to the public the application, and all related State submissions, including all supplemental information received from the State following the receipt of a complete application for a section 1332 waiver.

(2) Indicate the status of the application.

(f) *Criteria for a complete application.* An application for initial approval of a section 1332 waiver will not be considered complete unless the application meets all of the following conditions:

(1) Complies with paragraphs (a) through (f) of this section.

(2) Provides written evidence of the State's compliance with the public notice requirements set forth in § 155.1312, including a description of the key issues raised during the State public notice and comment period.

(3) Provides all of the following:

(i) A comprehensive description of the State legislation and program to implement a plan meeting the requirements for a waiver under section 1332;

(ii) A copy of the enacted State legislation that provides the State with authority to implement the proposed waiver, as required under section 1332(a)(1)(C) of the Affordable Care Act;

(iii) A list of the provisions of law that the State seeks to waive including a description of the reason for the specific requests; and

(iv) The analyses, actuarial certifications, data, assumptions, analysis, targets and other information set forth in paragraph (f)(4) of this section sufficient to provide the Secretary and the Secretary of the Treasury, as applicable, with the necessary data to determine that the State's proposed waiver:

(A) As required under section 1332(b)(1)(A) of the Affordable Care Act (the comprehensive coverage requirement), will provide coverage that is at least as comprehensive as the coverage defined in section 1302(b) of the Affordable Care Act and offered through Exchanges established under the Affordable Care Act as certified by the Office of the Actuary of the Centers for Medicare & Medicaid Services based on sufficient data from the State and from comparable States about their experience with programs created by the Affordable Care Act and the provisions of the Affordable Care Act that the State seeks to waive;

(B) As required under section 1332(b)(1)(B) of the Affordable Care Act (the affordability requirement), will provide coverage and cost sharing protections against excessive out-of-pocket spending that are at least as affordable as the provisions of Title I of the Affordable Care Act would provide;

(C) As required under section 1332(b)(1)(C) of the Affordable Care Act (the scope of coverage requirement), will provide coverage to at least a comparable number of its residents as the provisions of Title I of the Affordable Care Act would provide; and

(D) As prohibited under section 1332(b)(1)(D) of the Affordable Care Act (the Federal deficit requirement), will not increase the Federal deficit.

(4) Contains the following supporting information:

(i) *Actuarial analyses and actuarial certifications.* Actuarial analyses and actuarial certifications to support the State's estimates that the proposed waiver will comply with the comprehensive coverage requirement, the affordability requirement, and the scope of coverage requirement;

(ii) *Economic analyses.* Economic analyses to support the State's estimates that the proposed waiver will comply with the comprehensive coverage requirement, the affordability requirement, the scope of coverage requirement and the Federal deficit requirement, including:

(A) A detailed 10-year budget plan that is deficit neutral to the Federal government, as prescribed by section 1332(a)(1)(B)(ii) of the Affordable Care

Act, and includes all costs under the waiver, including administrative costs and other costs to the Federal government, if applicable; and

(B) A detailed analysis regarding the estimated impact of the waiver on health insurance coverage in the State.

(iii) *Data and assumptions.* The data and assumptions used to demonstrate that the State's proposed waiver is in compliance with the comprehensive coverage requirement, the affordability requirement, the scope of coverage requirement and the Federal deficit requirement, including:

(A) Information on the age, income, health expenses and current health insurance status of the relevant State population; the number of employers by number of employees and whether the employer offers insurance; cross-tabulations of these variables; and an explanation of data sources and quality; and

(B) An explanation of the key assumptions used to develop the estimates of the effect of the waiver on coverage and the Federal budget, such as individual and employer participation rates, behavioral changes, premium and price effects, and other relevant factors.

(iv) *Implementation timeline.* A detailed draft timeline for the State's implementation of the proposed waiver.

(v) *Additional information.* Additional information supporting the State's proposed waiver, including:

(A) An explanation as to whether the waiver increases or decreases the administrative burden on individuals, insurers, and employers, and if so, how and why;

(B) An explanation of how the waiver will affect the implementation of the provisions of the Affordable Care Act which the State is not requesting to waive in the State and at the Federal level;

(C) An explanation of how the waiver will affect residents who need to obtain health care services out-of-State, as well as the States in which such residents may seek such services;

(D) If applicable, an explanation as to how the State will provide the Federal government with all information necessary to administer the waiver at the Federal level; and

(E) An explanation of how the State's proposal will address potential individual, employer, insurer, or provider compliance, waste, fraud and abuse within the State or in other States.

(vi) *Reporting targets.* Quarterly, annual, and cumulative targets for the comprehensive coverage requirement, the affordability requirement, the scope of coverage requirement and the Federal deficit requirement.

(vii) *Other information.* Other information consistent with guidance provided by the Secretary and the Secretary of the Treasury, as applicable.

(g) *Additional supporting information.* (1) During the Federal review process, the Secretary may request additional supporting information from the State as needed to address public comments or to address issues that arise in reviewing the application.

(2) Requests for additional information, and responses to such requests, will be made available to the public in the same manner as information described in § 155.1316(b).

§ 155.1312 State public notice requirements.

(a) *General.* (1) Prior to submitting an application for a new section 1332 waiver to the Secretary for review and consideration, a State must provide a public notice and comment period sufficient to ensure a meaningful level of public input for the application for a section 1332 waiver.

(2) Such public notice and comment period shall include, for a State with one or more Federally-recognized Indian tribes within its borders, a separate process for meaningful consultation with such tribes.

(b) *Public notice and comment period.* The State shall make available at the beginning of the public notice and comment period, through its Web site or other effective means of communication, and shall update as appropriate, a public notice that includes all of the following:

(1) A comprehensive description of the application for a section 1332 waiver to be submitted to the Secretary including information and assurances related to all statutory requirements and other information consistent with guidance provided by the Secretary and the Secretary of the Treasury, as applicable.

(2) Information relating to where copies of the application for a section 1332 waiver are available for public review and comment.

(3) Information relating to how and where written comments may be submitted and reviewed by the public, and the timeframe during which comments will be accepted.

(4) The location, date, and time of public hearings that will be convened by the State to seek public input on the application for a section 1332 waiver.

(c) *Public hearings.* (1) After issuing the public notice and prior to submitting an application for a new section 1332 waiver, a State must conduct public hearings regarding the State's application.

(2) Such public hearings shall provide an interested party the opportunity to learn about and comment on the contents of the application for a section 1332 waiver.

(d) *Submission of initial application.* After the State public notice and comment period has concluded, the State may submit an application to the Secretary for an initial waiver in accordance with the requirements set forth in § 155.1308.

§ 155.1316 Federal public notice and approval process.

(a) *General.* The Federal public notice and approval process begins on the first business day after the Secretary and the Secretary of the Treasury, as applicable, determine that all elements for a complete application were documented and submitted to the Secretary.

(b) *Public notice and comment period.* (1) Following a determination that a State's application for a section 1332 waiver is complete, the Secretary and the Secretary of the Treasury, as applicable, will provide for a public notice and comment period that is sufficient to ensure a meaningful level of public input and that does not impose requirements that are in addition to, or duplicative of, requirements imposed under the Administrative Procedures Act, or requirements that are unreasonable or unnecessarily burdensome with respect to State compliance.

(2) At the beginning of the Federal notice and comment period, the Secretary will make available through its Web site and otherwise, and shall update as appropriate, public notice that includes all of the following:

(i) The complete application for a section 1332 waiver, updates for the status of the State's application, and any supplemental materials received from the State prior to and during the Federal public notice and comment period.

(ii) Information relating to where copies of the application for a section 1332 waiver are available for public review and comment.

(iii) Information relating to how and where written comments may be submitted and reviewed by the public, and the timeframe during which comments will be accepted.

(iv) Any public comments received during the Federal public notice and comment period.

(c) *Approval of a section 1332 waiver application.* The final decision of the Secretary and the Secretary of the Treasury, as applicable, on a State

application for a section 1332 waiver will be issued by the Secretary no later than 180 days after the determination by the Secretary and the Secretary of the Treasury, as applicable, that a complete application was received in accordance with § 155.1308.

§ 155.1320 Monitoring and compliance.

(a) *General.* (1) Following the issuance of a final decision to approve a section 1332 waiver by the Secretary and the Secretary of the Treasury, as applicable, a State must comply with all applicable Federal laws, regulations, interpretive policy statements and interpretive guidance unless expressly waived. A State must, within the timeframes specified in law, regulation, policy or guidance, come into compliance with any changes in Federal law, regulation, or policy affecting section 1332 waivers, unless the provision being changed is expressly waived.

(2) A State must comply with the terms and conditions of the agreement between the Secretary, the Secretary of the Treasury, as applicable, and the State to implement a section 1332 waiver.

(b) *Implementation reviews.* (1) The terms and conditions of an approved section 1332 waiver will provide that the State will perform periodic reviews of the implementation of the section 1332 waiver.

(2) The Secretary and the Secretary of the Treasury, as applicable, will review documented complaints that a State is failing to comply with requirements specified in the terms and conditions of any approved section 1332 waiver.

(3) The Secretary and the Secretary of the Treasury, as applicable, will promptly share with a State any complaint that the Secretary and the Secretary of the Treasury has received and will also provide notification of any applicable monitoring and compliance issues.

(c) *Post award.* Within at least 6 months after the implementation date of a section 1332 waiver and annually thereafter, a State must hold a public forum to solicit comments on the progress of a section 1332 waiver. The State must hold the public forum at which members of the public have an opportunity to provide comments and must provide a summary of the forum to the Secretary as part of the quarterly report specified in § 155.1324(a) that is associated with the quarter in which the forum was held, as well as in the annual report specified in § 155.1324(b) that is associated with the year in which the forum was held.

(1) The State must publish the date, time, and location of the public forum in a prominent location on the State's public web site, at least 30 days prior to the date of the planned public forum.

(2) [Reserved]

(d) *Terminations and suspensions.* The Secretary and the Secretary of the Treasury, as applicable, reserve the right to suspend or terminate a section 1332 waiver in whole or in part, at any time before the date of expiration, whenever the Secretary or the Secretary of the Treasury, as applicable, determines that a State has materially failed to comply with the terms of a section 1332 waiver.

(e) *Closeout costs.* If all or part of a section 1332 waiver is terminated or suspended, or if a portion of a section 1332 waiver is withdrawn, Federal funding is limited to normal closeout costs associated with an orderly termination, suspension, or withdrawal, including service costs during any approved transition period, and administrative costs of disenrolling participants.

(f) *Federal evaluators.* (1) A State must fully cooperate with the Secretary, the Secretary of the Treasury, as applicable, or an independent evaluator selected by the Secretary or the Secretary of the Treasury, as applicable, to undertake an independent evaluation of any component of a section 1332 waiver.

(2) As part of this required cooperation, a State must submit all requested data and information to the Secretary, the Secretary of the Treasury, as applicable, or the independent evaluator.

§ 155.1324 State reporting requirements.

(a) *Quarterly reports.* A State must submit quarterly reports to the Secretary in accordance with the terms and conditions of the State's section 1332 waiver. These quarterly reports must include, but are not limited to, reports of any ongoing operational challenges and plans for and results of associated corrective actions.

(b) *Annual reports.* A State must submit an annual report to the Secretary documenting all of the following:

(1) The progress of the section 1332 waiver.

(2) Data on compliance with section 1332(b)(1)(A) through (D) of the Affordable Care Act.

(3) A summary of the annual post-award public forum, held in accordance with § 155.1320(c), including all public comments received at such forum regarding the progress of the section 1332 waiver and action taken in response to such concerns or comments.

(4) Other information consistent with the State's approved terms and conditions.

(c) *Submitting and publishing annual reports.* A State must submit a draft annual report to the Secretary no later than 90 days after the end of each waiver year, or as specified in the waiver's terms and conditions.

(1) Within 60 days of receipt of comments from the Secretary, a State must submit to the Secretary the final annual report for the waiver year.

(2) The draft and final annual reports are to be published on a State's public web site within 30 days of submission to and approval by the Secretary, respectively.

§ 155.1328 Periodic evaluation requirements.

(a) The Secretary and the Secretary of the Treasury, as applicable, shall periodically evaluate the implementation of a program under a section 1332 waiver consistent with guidance published by the Secretary and the Secretary of the Treasury, as applicable, and any terms and conditions governing the section 1332 waiver.

(b) Each periodic evaluation must include a review of the annual report or reports submitted by the State in accordance with § 155.1324 that relate to the period of time covered by the evaluation.

Authority: Sec. 1332 of the Patient Protection and Affordable Care Act (Pub. L. 111–148).

Approved: January 26, 2012.

Marilyn Tavenner,

Acting Administrator, Centers for Medicare & Medicaid Services.

Approved: January 30, 2012.

Kathleen Sebelius,

Secretary of Health and Human Services.

Emily S. McMahon,

Acting Assistant Secretary (Tax Policy), Department of the Treasury.

[FR Doc. 2012–4395 Filed 2–22–12; 11:15 am]

BILLING CODE 4510–29–P; 4120–01–P

FEDERAL REGISTER

Vol. 77 Monday,

No. 38 February 27, 2012

Part IV

Department of the Treasury

Office of Foreign Assets Control

31 CFR Part 561

Iranian Financial Sanctions Regulations; Final Rule

DEPARTMENT OF THE TREASURY

Office of Foreign Assets Control

31 CFR Part 561

Iranian Financial Sanctions Regulations

AGENCY: Office of Foreign Assets Control, Treasury.

ACTION: Final rule.

SUMMARY: The Department of the Treasury's Office of Foreign Assets Control (''OFAC'') is amending the Iranian Financial Sanctions Regulations and reissuing them in their entirety, in order to implement section 1245(d) of the National Defense Authorization Act for Fiscal Year 2012, which provides for the imposition of sanctions with respect to the Central Bank of Iran and designated Iranian financial institutions.

DATES: *Effective Date:* February 27, 2012.

FOR FURTHER INFORMATION CONTACT: Assistant Director for Sanctions Compliance & Evaluation, tel.: 202/622–2490, Assistant Director for Licensing, tel.: 202/622–2480, Assistant Director for Policy, tel.: 202/622–4855, Office of Foreign Assets Control, or Chief Counsel (Foreign Assets Control), tel.: 202/622–2410, Office of the General Counsel, Department of the Treasury (not toll free numbers).

SUPPLEMENTARY INFORMATION:

Electronic and Facsimile Availability

This document and additional information concerning OFAC are available from OFAC's Web site (*www.treas.gov/ofac*). Certain general information pertaining to OFAC's sanctions programs also is available via facsimile through a 24-hour fax-on-demand service, tel.: 202/622–0077.

Background

On July 1, 2010, the President signed into law the Comprehensive Iran Sanctions, Accountability, and Divestment Act of 2010 (Pub. L. 111–195) (22 U.S.C. 8501–8551) (''CISADA''). Subsection 104(c) of CISADA required the Secretary of the Treasury, not later than 90 days after the date of CISADA's enactment, to prescribe regulations to prohibit, or impose strict conditions on, the opening or maintaining in the United States of a correspondent account or a payable-through account for a foreign financial institution that the Secretary finds knowingly engages in specified sanctionable activities, subject to certain waiver authorities provided to the Secretary in subsection 104(f) of CISADA. Subsection 104(d) of CISADA required the Secretary of the Treasury, not later than 90 days after the date of CISADA's enactment, to prescribe regulations to prohibit any person owned or controlled by a U.S. financial institution from knowingly engaging in transactions with or benefitting Iran's Islamic Revolutionary Guard Corps (''IRGC'') or any of its agents or affiliates whose property and interests in property are blocked pursuant to the International Emergency Economic Powers Act (50 U.S.C. 1701 *et seq.*) (''IEEPA''). On August 16, 2010, the Department of the Treasury's Office of Foreign Assets Control (''OFAC'') published the Iranian Financial Sanctions Regulations, 31 CFR Part 561 (the ''IFSR''), to implement subsections 104(c) and (d) and other related provisions of CISADA (75 FR 49836).

On September 28, 2010, the President issued Executive Order 13553 (75 FR 60567, October 1, 2010) (''E.O. 13553''), invoking the authority of, *inter alia*, IEEPA and CISADA, and in order to take additional steps with respect to the national emergency declared in Executive Order 12957 of March 15, 1995, with respect to Iran.

Section 8 of E.O. 13553 authorizes the Secretary of the Treasury, in consultation with the Secretary of State, to take such actions, including the promulgation of rules and regulations, and to employ all powers granted to the President by IEEPA, as may be necessary to carry out section 104 of CISADA. In addition, section 8 of E.O. 13553 authorizes the Secretary of the Treasury to redelegate these functions to other officers and agencies of the United States Government consistent with applicable law. E.O. 13553 thereby provided IEEPA authority for the IFSR.

On December 31, 2011, the President signed into law the National Defense Authorization Act for Fiscal Year 2012 (Pub. L. 112–81) (''NDAA''). Section 1245(d)(1) of the NDAA requires the President to prohibit the opening, and prohibit or impose strict conditions on the maintaining, in the United States of a correspondent account or a payable-through account by a foreign financial institution that the President determines has knowingly conducted or facilitated any significant financial transaction with the Central Bank of Iran or another Iranian financial institution designated by the Secretary of the Treasury pursuant to IEEPA. Pursuant to section 1245(d)(2), a foreign financial institution conducting or facilitating a transaction for the sale of food, medicine, or medical devices to Iran will not be subject to sanctions under the NDAA for such transactions.

For a private foreign financial institution, section 1245(d)(1) of the NDAA calls for sanctions beginning 60 days after the date of enactment of the NDAA for transactions other than those for the purchase of petroleum or petroleum products from Iran. For transactions by a private foreign financial institution for the purchase of petroleum or petroleum products from Iran, section 1245(d)(4)(C) calls for sanctions pursuant to section 1245(d)(1) beginning 180 days after the date of enactment of the NDAA (or later, as further described below). For a foreign financial institution owned or controlled by the government of a foreign country, including the central bank of a foreign country, section 1245(d)(3) calls for sanctions pursuant to section 1245(d)(1) beginning 180 days after the date of enactment of the NDAA (or later, as further described below) and only for transactions for the sale or purchase of petroleum or petroleum products to or from Iran.

For all foreign financial institutions, section 1245(d)(4)(C) of the NDAA provides that the sanctions in section 1245(d)(1) shall apply for transactions for the purchase of petroleum or petroleum products from Iran only if the President makes required periodic determinations that there is sufficient supply of petroleum and petroleum products from countries other than Iran to permit a significant reduction in the volume of petroleum and petroleum products purchased from Iran by or through foreign financial institutions.

Section 1245(d)(4)(D) of the NDAA provides for an exception to the imposition of sanctions on any foreign financial institution if the President determines and periodically reports to Congress that the country with primary jurisdiction over that foreign financial institution has significantly reduced its volume of crude oil purchases from Iran during a specified period of time preceding the report.

Pursuant to section 1245(d)(5) of the NDAA, the President may waive the imposition of sanctions in section 1245(d)(1) for a period of not more than 120 days, and may renew that waiver for additional periods of not more than 120 days, provided the President determines that such a waiver is in the national security interest of the United States and submits a report to Congress providing justification for the waiver and that includes any concrete cooperation that the President has received or expects to receive as a result of the waiver.

Finally, section 1245(g) of the NDAA provides that the President may exercise all authorities under sections 203 and

205 of IEEPA and may impose the penalties provided in section 206(b) and (c) of IEEPA to implement and enforce section 1245 of the NDAA.

Section 1245(d) of the NDAA does not repeal or amend section 104(c) of CISADA. Though section 1245(d) of the NDAA imposes sanctions on foreign financial institutions similar to the financial sanctions under CISADA and the IFSR prior to this regulatory amendment (i.e., prohibiting and/or imposing strict conditions on opening or maintaining correspondent accounts or payable-through accounts in the United States), there are differences in the underlying financial transactions that serve as the trigger for the imposition of sanctions. Therefore, section 1245(d) of the NDAA and section 104(c) of CISADA, as implemented, respectively, by new § 561.203 and by § 561.201 of the IFSR, are separate from, and independent of, each other.

On February 5, 2012, the President, invoking the authority of, *inter alia,* IEEPA and section 1245 of the NDAA, issued Executive Order 13599 (''Blocking Property of the Government of Iran and Iranian Financial Institutions'') (''E.O. 13599''), in order to take additional steps with respect to the national emergency declared in Executive Order 12957 of March 15, 1995, with respect to Iran, particularly in light of the deceptive practices of the Central Bank of Iran and other Iranian banks to conceal transactions of sanctioned parties, the deficiencies in Iran's anti-money laundering regime and the weaknesses in its implementation, and the continuing and unacceptable risk posed to the international financial system by Iran's activities.

Section 1 of E.O. 13599 blocks all property and interests in property that are in the United States, that come within the United States, or that are or come within the possession or control of any United States person, including any overseas branch, of the Government of Iran (including the Central Bank of Iran), any Iranian financial institution, and any person determined by the Secretary of the Treasury, in consultation with the Secretary of State, to be owned or controlled by, or to have acted or purported to act for or on behalf of, directly or indirectly, any person whose property and interests in property are blocked pursuant to E.O. 13599. The property and interests in property of the persons described above may not be transferred, paid, exported, withdrawn, or otherwise dealt in.

In addition, Section 10 of E.O. 13599 delegates to the Secretary of the Treasury, in consultation with the Secretary of State, the authority to exercise the relevant functions and authorities conferred upon the President by sections 1245(d)(1)(A) and (g)(1) of the NDAA.

Today, OFAC is amending the IFSR to accomplish several purposes. First, OFAC is amending the IFSR to implement section 1245(d) and other related provisions of section 1245 of the NDAA. Section 561.203 of the IFSR adds the prohibitions and exceptions set forth in section 1245(d) of the NDAA. Sections 561.318 through 561.327 of the IFSR define new key terms used in § 561.203 of the IFSR, and §§ 561.406 and 561.407 of the IFSR contain new interpretive provisions regarding § 561.203 of the IFSR. In particular, §§ 561.318 and 561.319 of the IFSR define the terms *petroleum* and *petroleum products,* and § 561.327 of the IFSR defines the term *food, medicine, and medical devices.* Section 561.406 of the IFSR provides an interpretation of the phrase *country with primary jurisdiction over the foreign financial institution* for purposes of § 561.203 of the IFSR. An amended § 561.404 of the IFSR sets forth the types of factors that, as a general matter, the Secretary of the Treasury will consider in determining whether a transaction is significant, for purposes of both §§ 561.201 and 561.203 of the IFSR.

Second, to implement section 8 of E.O. 13553, OFAC is adding IEEPA to the authority citation for the IFSR. As a related change, OFAC is amending § 561.802 of the IFSR to add a delegation of IEEPA authorities to the Director of OFAC or any other person to whom the Secretary of the Treasury has delegated authority to act. With the amendments to the authority citation and § 561.802 of the IFSR, OFAC is clarifying that it may exercise the same IEEPA authorities that are used in OFAC's other IEEPA-based sanctions programs—in addition to authorities under section 104 of CISADA—to investigate, regulate, or prohibit transactions under the IFSR.

Third, OFAC is amending § 561.201 of the IFSR to remove references to Appendix A to Part 561 throughout the section. Section 561.201 provided that if, upon a finding by the Secretary of the Treasury that a foreign financial institution knowingly engaged in one or more of the sanctionable activities set forth in paragraph (a) of § 561.201, the Secretary decided to prohibit a U.S. financial institution from opening or maintaining a correspondent account or a payable-through account in the United States for that foreign financial institution, the name of that foreign financial institution would be added to Appendix A to Part 561. Today's amendment removes the references to Appendix A throughout § 561.201 and instead provides that the names of the foreign financial institutions sanctioned under either § 561.201 or § 561.203 will be added to the List of Foreign Financial Institutions Subject to Part 561 (the ''Part 561 List''), which is a new list to be maintained on the Office of Foreign Assets Control's Web site (*www.treasury.gov/ofac*) on its Iran Sanctions page, and published in the **Federal Register**. This list also will state the prohibition or strict condition(s) that apply with respect to each sanctioned foreign financial institution. In addition, OFAC is making conforming amendments to § 561.504 of the IFSR to remove references to Appendix A throughout the section and substitute therefor references to the Part 561 List on OFAC's Web site, as described below. In a final related amendment, OFAC is removing Appendix A to Part 561, which had been reserved.

Fourth, OFAC is amending the IFSR to add a reporting requirement to the general license in § 561.504, which authorizes transactions related to closing a correspondent account or a payable-through account for a foreign financial institution. OFAC is also amending § 561.504 to make the general license and reporting requirement applicable when correspondent accounts or payable-through accounts for a foreign financial institution are required to be closed pursuant to new § 561.203, as well as § 561.201. As set forth in amended § 561.201 and new § 561.203 of the IFSR, if the Secretary of the Treasury decides to prohibit the opening or maintaining of correspondent accounts or payable-through accounts in the United States for a foreign financial institution, the name of the foreign financial institution will be added to the Part 561 List. Amended paragraph (a) of § 561.504 authorizes transactions related to closing a correspondent account or a payable-through account for a foreign financial institution whose name is added to the Part 561 List during the 10-day period beginning on the effective date of the prohibition in § 561.201(c) or § 561.203(c). Under new paragraph (b) of § 561.504, a U.S. financial institution that maintained a correspondent account or a payable-through account for a foreign financial institution whose name is added to the Part 561 List on OFAC's Web site must file a report with OFAC that provides full details on the closing of each such account within 30 days of the closure of the account. The

report must include complete information on all transactions processed or executed in winding down and closing the account. Former paragraphs (b) and (c) of § 561.504 are being redesignated as paragraphs (c) and (d), respectively.

In connection with the new reporting requirement in § 561.504(b), OFAC also is amending § 561.901 of the IFSR to add a statement that the information collection in § 561.504(b) has been approved by the Office of Management and Budget (''OMB'') and assigned control number 1505–0243 (*see* discussion under Paperwork Reduction Act, below).

Finally, OFAC is amending §§ 561.702(b)(3) and 561.802 of the IFSR to make technical changes or corrections.

Public Participation and Paperwork Reduction Act

Because the IFSR involve a foreign affairs function, the provisions of Executive Order 12866 and the Administrative Procedure Act (5 U.S.C. 553) requiring notice of proposed rulemaking, opportunity for public participation, and delay in effective date are inapplicable. Because no notice of proposed rulemaking is required for this rule, the Regulatory Flexibility Act (5 U.S.C. 601–612) does not apply.

With respect to section 2 (44 U.S.C. 3507) of the Paperwork Reduction Act of 1995 (44 U.S.C. 3501 *et seq.*), the collection of information in § 561.601 of the IFSR is made pursuant to OFAC's Reporting, Procedures and Penalties Regulations, 31 CFR part 501, and has been approved by OMB under control number 1505–0164. *See* 31 CFR 501.901. The collection of information in § 561.504(b) of the IFSR has been submitted to and approved by OMB pending public comment and has been assigned OMB control number 1505–0243. Section 561.504(b) specifies that a U.S. financial institution that maintained a correspondent account or payable-through account for a foreign financial institution listed on the Part 561 List on OFAC's Web site (*www.treasury.gov/ofac*) must file a report with OFAC that provides full details on the closing of each such account within 30 days of the closure of the account. This collection of information assists in verifying that U.S. financial institutions are complying with prohibitions on maintaining correspondent accounts or payable-through accounts for foreign financial institutions listed on the Part 561 List, and the information collected will be used to further OFAC's compliance and enforcement functions.

With respect to all of the foregoing collections of information, an agency may not conduct or sponsor, and a person is not required to respond to, a collection of information, unless the collection of information displays a valid control number.

The likely respondents and recordkeepers affected by the new collection of information in § 561.504(b) are U.S. financial institutions operating correspondent accounts or payable-through accounts for foreign financial institutions. Because this is a new collection of information, OFAC cannot predict the response rate for the § 561.504(b) reporting requirement at this time. For future submissions, OFAC will report retrospectively on the response rate during the previous reporting period.

The estimated average reporting/recordkeeping burden is 2 hours per response.

Comments are invited on: (a) Whether this collection of information is necessary for the proper performance of the functions of the agency, including whether the information has practical utility; (b) the accuracy of the agency's estimate of the burden of the collection of information; (c) ways to enhance the quality, utility, and clarity of the information to be collected; (d) ways to minimize the burden of the collection of information on respondents, including through the use of automated collection techniques and other forms of information technology; and (e) the estimated capital or start-up costs of the operation, maintenance, and/or purchase of services to provide information.

Comments concerning the above information and the accuracy of these burden estimates, and suggestions for reducing this burden, should be directed to OMB, Attention: Desk Officer for the Department of the Treasury, Office of Information and Regulatory Affairs, Washington, DC 20503, with a copy to Chief of Records, Attention: Request for Comments, Office of Foreign Assets Control, Department of the Treasury, 1500 Pennsylvania Avenue NW., Washington, DC 20220. Any such comments should be submitted not later than April 27, 2012. All comments on the collection of information in § 561.504(b) will be a matter of public record.

List of Subjects in 31 CFR Part 561

Administrative practice and procedure, Banks, Banking, Brokers, Foreign trade, Investments, Loans, Securities, Iran.

For the reasons set forth in the preamble, the Department of the Treasury's Office of Foreign Assets Control is revising part 561 of 31 CFR chapter V to read as follows:

PART 561—IRANIAN FINANCIAL SANCTIONS REGULATIONS

Subpart A—Relation of This Part to Other Laws and Regulations

Sec.

561.101 Relation of this part to other laws and regulations.

Subpart B—Prohibitions

561.201 CISADA-based sanctions on certain foreign financial institutions.
561.202 Prohibitions on persons owned or controlled by U.S. financial institutions.
561.203 NDAA-based sanctions on certain foreign financial institutions.

Subpart C—General Definitions

561.301 Effective date.
561.302 UNSC Resolution 1737.
561.303 UNSC Resolution 1747.
561.304 UNSC Resolution 1803.
561.305 UNSC Resolution 1929.
561.306 Correspondent account.
561.307 Payable-through account.
561.308 Foreign financial institution.
561.309 U.S. financial institution.
561.310 Money laundering.
561.311 Agent.
561.312 Act of international terrorism.
561.313 Financial services.
561.314 Knowingly.
561.315 Person.
561.316 Entity.
561.317 Money service businesses.
561.318 Petroleum.
561.319 Petroleum products.
561.320 Iranian financial institution.
561.321 Government of Iran.
561.322 Entity owned or controlled by the Government of Iran.
561.323 Foreign financial institution owned or controlled by the government of a foreign country.
561.324 Designated Iranian financial institution.
561.325 Financial transaction.
561.326 Privately owned foreign financial institution.
561.327 Food, medicine, and medical devices.

Subpart D—Interpretations

561.401 Reference to amended sections.
561.402 Effect of amendment.
561.403 Facilitation of certain efforts, activities, or transactions by foreign financial institutions.
561.404 Significant transaction or transactions; significant financial services; significant financial transaction.
561.405 Entities owned by a person whose property and interests in property are blocked.
561.406 Country with primary jurisdiction over the foreign financial institution.
561.407 Conducting or facilitating a financial transaction with the Central Bank of Iran or a designated Iranian financial institution.

Subpart E—Licenses, Authorizations, and Statements of Licensing Policy

561.501 General and specific licensing procedures.
561.502 Effect of license or authorization.
561.503 Exclusion from licenses.
561.504 Transactions related to closing a correspondent account or payable-through account.

Subpart F—Reports

561.601 Records and reports.

Subpart G—Penalties

561.701 Penalties.
561.702 Pre-Penalty Notice; settlement.
561.703 Penalty imposition.
561.704 Administrative collection; referral to United States Department of Justice.

Subpart H—Procedures

561.801 Procedures.
561.802 Delegation by the Secretary of the Treasury.
561.803 Consultations.

Subpart I—Paperwork Reduction Act

561.901 Paperwork Reduction Act notice.

Authority: 3 U.S.C. 301; 31 U.S.C. 321(b); 50 U.S.C. 1601–1651, 1701–1706; Pub. L. 101–410, 104 Stat. 890 (28 U.S.C. 2461 note); Pub. L. 110–96, 121 Stat. 1011 (50 U.S.C. 1705 note); Pub. L. 111–195, 124 Stat. 1312 (22 U.S.C. 8501–8551); Pub. L. 112–81, 125 Stat. 1298; E.O. 12957, 60 FR 14615, 3 CFR, 1995 Comp., p. 332; E.O. 13553, 75 FR 60567, 3 CFR, 2010 Comp., p. 253; E.O. 13599, 77 FR 6659, February 8, 2012.

Subpart A—Relation of This Part to Other Laws and Regulations

§ 561.101 Relation of this part to other laws and regulations.

This part is separate from, and independent of, the other parts of this chapter, with the exception of part 501 of this chapter, the recordkeeping and reporting requirements and license application and other procedures of which apply to this part. Actions taken pursuant to part 501 of this chapter with respect to the prohibitions contained in this part or the conditions imposed pursuant to this part are considered actions taken pursuant to this part. Differing foreign policy and national security circumstances may result in differing interpretations of similar language among the parts of this chapter. No license or authorization contained in or issued pursuant to those other parts authorizes any transaction prohibited by this part. No license or authorization contained in or issued pursuant to any other provision of law or regulation authorizes any transaction prohibited by this part. No license or authorization contained in or issued pursuant to this part relieves the involved parties from complying with any other applicable laws or regulations.

Subpart B—Prohibitions

§ 561.201 CISADA-based sanctions on certain foreign financial institutions.

Upon a finding by the Secretary of the Treasury that a foreign financial institution knowingly engages in one or more of the activities described in paragraphs (a)(1) through (5) of this section, consistent with the Secretary of the Treasury's authorities under the Comprehensive Iran Sanctions, Accountability, and Divestment Act of 2010 (Pub. L. 111–195) (22 U.S.C. 8501–8551) (''CISADA''), either the Secretary of the Treasury will impose one or more strict conditions, as set forth in paragraph (b) of this section, on the opening or maintaining of a correspondent account or a payable-through account in the United States for that foreign financial institution, or, as set forth in paragraph (c) of this section, the Secretary of the Treasury will prohibit a U.S. financial institution from opening or maintaining a correspondent account or a payable-through account in the United States for that foreign financial institution. The name of the foreign financial institution and the relevant prohibition or strict condition(s) will be added to the List of Foreign Financial Institutions Subject to Part 561 (the ''Part 561 List'') on the Office of Foreign Assets Control's Web site (*www.treasury.gov/ofac*) on the Iran Sanctions page and published in the **Federal Register**.

(a) A foreign financial institution engages in an activity described in this paragraph if, in any location or currency, the foreign financial institution knowingly:

(1) Facilitates the efforts of the Government of Iran (including efforts of Iran's Islamic Revolutionary Guard Corps or any of its agents or affiliates)—

(i) To acquire or develop weapons of mass destruction or delivery systems for weapons of mass destruction; or

(ii) To provide support for organizations designated as foreign terrorist organizations under section 219(a) of the Immigration and Nationality Act (8 U.S.C. 1189(a)) or support for acts of international terrorism, as defined in § 561.312 of this part;

(2) Facilitates the activities of a person subject to financial sanctions pursuant to United Nations Security Council Resolutions 1737, 1747, 1803, or 1929, or any other resolution adopted by the Security Council that imposes sanctions with respect to Iran;

Note to paragraph (a)(2) of § 561.201: Persons subject to financial sanctions pursuant to the United Nations Security Council resolutions listed in § 561.201(a)(2) include individuals and entities listed in the Annex to UNSC Resolution 1737, Annex I of UNSC Resolution 1747, Annexes I and III of UNSC Resolution 1803, and Annexes I, II, and III of UNSC Resolution 1929; and individuals and entities designated by the Security Council or by the Committee established pursuant to UNSC Resolution 1737 (the ''Committee'') as being engaged in, directly associated with or providing support for Iran's proliferation sensitive nuclear activities, or the development of nuclear weapon delivery systems; and individuals and entities acting on behalf of or at the direction of those so listed or designated; and entities owned or controlled by those so listed or designated; and individuals and entities determined by the Security Council or the Committee to have assisted listed or designated individuals or entities in evading sanctions of, or in violating the provisions of, UNSC Resolutions 1737, 1747, 1803, or 1929.

(3) Engages in money laundering to carry out an activity described in paragraphs (a)(1) or (2) of this section;

(4) Facilitates efforts by the Central Bank of Iran or any other Iranian financial institution to carry out an activity described in paragraphs (a)(1) or (2) of this section; or

(5) Facilitates a significant transaction or transactions or provides significant financial services for—

(i) Iran's Islamic Revolutionary Guard Corps or any of its agents or affiliates whose property and interests in property are blocked pursuant to the International Emergency Economic Powers Act (50 U.S.C. 1701 *et seq.*) (''IEEPA''); or

(ii) A financial institution whose property and interests in property are blocked pursuant to parts 544 or 594 of this chapter in connection with Iran's proliferation of weapons of mass destruction or delivery systems for weapons of mass destruction or Iran's support for international terrorism.

Note to paragraph (a)(5) of § 561.201: The names of persons whose property and interests in property are blocked pursuant to IEEPA are published in the **Federal Register** and incorporated into the Office of Foreign Assets Control's Specially Designated Nationals and Blocked Persons List (the ''SDN List''). The SDN List is accessible through the following page on the Office of Foreign Assets Control's Web site: *www.treasury.gov/sdn.* Additional information pertaining to the SDN List can be found in appendix A to this chapter. Agents or affiliates of Iran's Islamic Revolutionary Guard Corps (''IRGC'') whose property and interests in property are blocked pursuant to IEEPA are identified by a special reference to the ''IRGC'' at the end of their entries on the SDN List, in addition to the reference to the regulatory part of this chapter pursuant to which their property and interests in property are blocked. For example, an affiliate of the IRGC whose property and interests in property are blocked pursuant to

the Weapons of Mass Destruction Proliferators Sanctions Regulations, 31 CFR part 544, will have the tag ''[NPWMD] [IRGC]'' at the end of its entry on the SDN List. Financial institutions whose property and interests in property are blocked pursuant to parts 544 or 594 of this chapter in connection with Iran's proliferation of weapons of mass destruction or delivery systems for weapons of mass destruction or Iran's support for international terrorism also are identified by the tag ''[IFSR]'' in addition to the tag referencing part 544 or part 594, as the case may be, located at the end of their entries on the SDN List (e.g., [NPWMD] [IFSR] or [SDGT] [IFSR]). In addition, see § 561.405 concerning entities that may not be listed on the SDN List but whose property and interests in property are nevertheless blocked.

(b) The Secretary of the Treasury may impose one or more strict conditions on the opening or maintaining by a U.S. financial institution of a correspondent account or a payable-through account in the United States for a foreign financial institution that the Secretary finds engages in one or more of the activities described in paragraph (a) of this section. Except as otherwise authorized pursuant to this part, a U.S. financial institution shall not open or maintain a correspondent account or payable-through account in the United States in a manner that is inconsistent with any strict condition imposed and in effect pursuant to this paragraph. Such conditions may include, but are not limited to, the following:

(1) Prohibiting or restricting any provision of trade finance through the correspondent account or payable-through account of the foreign financial institution;

(2) Restricting the transactions that may be processed through the correspondent account or payable-through account of the foreign financial institution to certain types of transactions, such as personal remittances;

(3) Placing monetary limits on, or limiting the volume of, the transactions that may be processed through the correspondent account or payable-through account of the foreign financial institution;

(4) Requiring pre-approval from the U.S. financial institution for all transactions processed through the correspondent account or payable-through account of the foreign financial institution; or

(5) Prohibiting or restricting the processing of foreign exchange transactions through the correspondent account or payable-through account of the foreign financial institution.

Note to paragraph (b) of § 561.201: The name of the foreign financial institution, together with the actual strict condition or conditions to be imposed, will be added to the Part 561 List on the Office of Foreign Assets Control's Web site (*www.treasury.gov/ofac*) on the Iran Sanctions page, and published in the **Federal Register**.

(c) If the Secretary of the Treasury does not impose one or more strict conditions, pursuant to paragraph (b) of this section, on the opening or maintaining of a correspondent account or a payable-through account in the United States for a foreign financial institution that the Secretary finds engages in one or more of the activities described in paragraph (a) of this section, the Secretary, consistent with CISADA, will prohibit the opening or maintaining by a U.S. financial institution of a correspondent account or a payable-through account in the United States for that foreign financial institution. Except as otherwise authorized pursuant to this part, a U.S. financial institution shall not open or maintain a correspondent account or a payable-through account in the United States for a foreign financial institution for which the opening or maintaining of such an account is prohibited pursuant to this paragraph.

Note to paragraph (c) of § 561.201: The names of foreign financial institutions for which the opening or maintaining of a correspondent account or a payable-through account in the United States is prohibited will be listed on the Part 561 List on the Office of Foreign Assets Control's Web site (*www.treasury.gov/ofac*) on the Iran Sanctions page, and published in the **Federal Register**.

Note to § 561.201: The Part 561 List will specify whether U.S. financial institutions are required to:

(1) Impose strict conditions on the opening or maintaining of a correspondent account or a payable-through account for a particular foreign financial institution pursuant to paragraph (b) of this section;

(2) Prohibit the opening or maintaining of a correspondent account or a payable-through account for a particular foreign financial institution pursuant to paragraph (c) of this section;

(3) Prohibit the opening or maintaining of a correspondent account or a payable-through account for a particular foreign financial institution pursuant to § 561.203(a)(1) and (a)(2)(i); or

(4) Prohibit the opening of a correspondent account or a payable-through account and impose strict conditions on maintaining a preexisting correspondent account or a payable-through account for a particular foreign financial institution pursuant to § 561.203(a)(1) and (a)(2)(ii). Where applicable, the Part 561 List also will specify the strict condition or conditions to be imposed on the correspondent account or the payable-through account.

§ 561.202 Prohibitions on persons owned or controlled by U.S. financial institutions.

Except as otherwise authorized pursuant to this part, any person that is owned or controlled by a U.S. financial institution is prohibited from knowingly engaging in any transaction with or benefitting Iran's Islamic Revolutionary Guard Corps or any of its agents or affiliates whose property and interests in property are blocked pursuant to the International Emergency Economic Powers Act (50 U.S.C. 1701 *et seq.*) (''IEEPA'').

Note 1 to § 561.202: The names of persons whose property and interests in property are blocked pursuant to IEEPA are published in the **Federal Register** and incorporated into the Office of Foreign Assets Control's Specially Designated Nationals and Blocked Persons List (the ''SDN List''). The SDN List is accessible through the following page on the Office of Foreign Assets Control's Web site: *www.treasury.gov/sdn.* Additional information pertaining to the SDN List can be found in appendix A to this chapter. Agents or affiliates of Iran's Islamic Revolutionary Guard Corps (''IRGC'') whose property and interests in property are blocked pursuant to IEEPA are identified by a special reference to the ''IRGC'' at the end of their entries on the SDN List, in addition to the reference to the regulatory part of this chapter pursuant to which their property and interests in property are blocked. For example, an affiliate of the IRGC whose property and interests in property are blocked pursuant to the Weapons of Mass Destruction Proliferators Sanctions Regulations, 31 CFR part 544, will have the tag ''[NPWMD] [IRGC]'' at the end of its entry on the SDN List. In addition, see § 561.405 concerning entities that may not be listed on the SDN List but whose property and interests in property are nevertheless blocked.

Note 2 to § 561.202: A U.S. financial institution is subject to the civil penalties provided for in section 206(b) of IEEPA if any person that it owns or controls violates the prohibition set forth in this section and the U.S. financial institution knew or should have known of such violation. *See* § 561.701(a)(2).

§ 561.203 NDAA-based sanctions on certain foreign financial institutions.

(a) *Imposition of sanctions.* Subject to the limitations, exceptions, and conditions set forth in paragraphs (d) through (h) of this section, upon a determination by the Secretary of the Treasury that a foreign financial institution has knowingly conducted or facilitated any significant financial transaction with the Central Bank of Iran or a designated Iranian financial institution, consistent with section 1245 of the National Defense Authorization Act for Fiscal Year 2012 (Pub. L. 112–81), the Secretary of the Treasury:

(1) Will prohibit U.S. financial institutions from opening a correspondent account or a payable-through account in the United States for the foreign financial institution with respect to which the determination has been made; and either

(2)(i) Will prohibit U.S. financial institutions from maintaining a correspondent account or a payable-through account in the United States for the foreign financial institution with respect to which the determination has been made; or

(ii) Will impose one or more strict conditions on the maintaining of any correspondent account or payable-through account that had been opened in the United States for the foreign financial institution prior to the Secretary of the Treasury's determination with respect to the foreign financial institution.

Note 1 to paragraph (a) of § 561.203: The names of *designated Iranian financial institutions* are identified on the Specially Designated Nationals and Blocked Persons List (the ''SDN List'') on the Office of Foreign Assets Control's Web site with the tag ''[NDAA]'' at the end of their entries, in addition to the reference to the regulatory part of this chapter pursuant to which their property and interests in property are blocked. The SDN List is accessible through the following page on the Office of Foreign Assets Control's Web site: *www.treasury.gov/sdn.*

Note 2 to paragraph (a) of § 561.203: The name of any foreign financial institution with respect to which a determination has been made pursuant to this paragraph (a), along with the relevant sanctions to be imposed (prohibition(s) and/or strict condition(s)), will be added to the List of Foreign Financial Institutions Subject to Part 561 (the ''Part 561 List''), which is maintained on the Office of Foreign Assets Control's Web site (*www.treasury.gov/ofac*) on the Iran Sanctions page, and published in the **Federal Register**.

(b) *Strict conditions.* The strict conditions that might be imposed on the maintaining of a pre-existing correspondent account or payable-through account for a foreign financial institution pursuant to paragraph (a)(2)(ii) of this section include, but are not limited to, the following:

(1) Prohibiting or restricting any provision of trade finance through the correspondent account or payable-through account of the foreign financial institution;

(2) Restricting the transactions that may be processed through the correspondent account or payable-through account of the foreign financial institution to certain types of transactions, such as personal remittances;

(3) Placing monetary limits on, or limiting the volume of, the transactions that may be processed through the correspondent account or payable-through account of the foreign financial institution;

(4) Requiring pre-approval from the U.S. financial institution for all transactions processed through the correspondent account or payable-through account of the foreign financial institution; or

(5) Prohibiting or restricting the processing of foreign exchange transactions through the correspondent account or payable-through account of the foreign financial institution.

(c) *Prohibitions.* (1) Except as otherwise authorized pursuant to this part, a U.S. financial institution shall not open a correspondent account or payable-through account in the United States for a foreign financial institution for which the opening of such an account is prohibited pursuant to paragraph (a)(1) of this section.

(2) Except as otherwise authorized pursuant to this part, a U.S. financial institution shall not maintain a correspondent account or payable-through account in the United States for a foreign financial institution for which the maintaining of such an account is prohibited pursuant to paragraph (a)(2)(i) of this section.

(3) Except as otherwise authorized pursuant to this part, a U.S. financial institution shall not maintain a correspondent account or payable-through account in the United States for a foreign financial institution in a manner that is inconsistent with any strict condition imposed and in effect pursuant to paragraph (a)(2)(ii) of this section.

(d) *Privately owned foreign financial institutions.* (1) Subject to the exceptions set forth in paragraphs (f) and (h) of this section, sanctions may be imposed pursuant to paragraph (a) of this section beginning on February 29, 2012, with respect to any significant financial transaction conducted or facilitated by a privately owned foreign financial institution that is not for the purchase of petroleum or petroleum products from Iran.

(2) Subject to the exceptions and conditions set forth in paragraphs (g) and (h) of this section, sanctions may be imposed pursuant to paragraph (a) of this section with respect to any significant financial transaction conducted or facilitated by a privately owned foreign financial institution on or after June 28, 2012, for the purchase of petroleum or petroleum products from Iran.

(e) *Government-owned or -controlled foreign financial institutions, including foreign central banks.* Subject to the exceptions and conditions set forth in paragraphs (g) and (h) of this section, sanctions may be imposed pursuant to paragraph (a) of this section on a foreign financial institution owned or controlled by the government of a foreign country, including a central bank of a foreign country, only insofar as it engages in a significant financial transaction on or after June 28, 2012, for the sale or purchase of petroleum or petroleum products to or from Iran.

(f) Sanctions will not be imposed under paragraph (a) of this section with respect to any foreign financial institution for conducting or facilitating a transaction for the sale of food, medicine, or medical devices to Iran.

(g) The Secretary of the Treasury may impose sanctions pursuant to paragraph (a) of this section with respect to any significant financial transaction conducted or facilitated by a foreign financial institution on or after June 28, 2012, for the purchase of petroleum or petroleum products from Iran only if the President determines, not later than March 30, 2012, and every 180 days thereafter, that there is a sufficient supply of petroleum and petroleum products from countries other than Iran to permit a significant reduction in the volume of petroleum and petroleum products purchased from Iran by or through foreign financial institutions. Such successive sufficiency determinations by the President shall render subject to sanctions under paragraph (a) of this section those financial transactions conducted or facilitated by a foreign financial institution for the purchase of petroleum or petroleum products from Iran during each successive 180-day period beginning 90 days after the President's determination.

Note to paragraph (g) of § 561.203: Under Section 1245(d)(4)(B) of the NDAA, the President is to make a determination, not later than March 30, 2012, and every 180 days thereafter, of whether the price and supply of petroleum and petroleum products produced in countries other than Iran is sufficient to permit purchasers of petroleum and petroleum products from Iran to reduce significantly in volume their purchases from Iran. This determination is to be based on reports on the availability and price of petroleum and petroleum products produced in countries other than Iran that, pursuant to section 1245(d)(4)(A) of the NDAA, the Administrator of the Energy Information Administration, in consultation with the Secretary of the Treasury, the Secretary of State, and the Director of National

Intelligence, is to submit to Congress beginning not later than February 29, 2012, and every 60 days thereafter.

(h) Sanctions will not be imposed under paragraph (a) of this section on a foreign financial institution if the Secretary of State determines and reports to Congress not later than 90 days after the date on which the President makes the initial determination referenced in paragraph (g) of this section, and every 180 days thereafter, that the country with primary jurisdiction over the foreign financial institution has significantly reduced its volume of crude oil purchases from Iran during the period prior to the initial determination, and during successive 180-day periods.

Note to § 561.203: The sanctions regime described in § 561.203 is separate from the sanctions regime described in § 561.201 and applies in addition to, and independently of, the sanctions regime imposed under § 561.201.

Subpart C—General Definitions

§ 561.301 Effective date.

(a) The effective date of a prohibition or condition imposed pursuant to § 561.201 or § 561.203 on the opening or maintaining of a correspondent account or a payable-through account in the United States by a U.S. financial institution for a particular foreign financial institution is the earlier of the date the U.S. financial institution receives actual or constructive notice of such prohibition or condition.

(b) The effective date of the prohibition contained in § 561.202 with respect to Iran's Islamic Revolutionary Guard Corps and any of its agents or affiliates whose property and interests in property are blocked as of August 16, 2010, is August 16, 2010.

(c) The effective date of the prohibition contained in § 561.202 with respect to an agent or affiliate of Iran's Islamic Revolutionary Guard Corps whose property and interests in property become blocked after August 16, 2010, is the earlier of the date of actual or constructive notice that such person's property and interests in property are blocked.

§ 561.302 UNSC Resolution 1737.

The term *UNSC Resolution 1737* means United Nations Security Council Resolution 1737, adopted December 23, 2006.

§ 561.303 UNSC Resolution 1747.

The term *UNSC Resolution 1747* means United Nations Security Council Resolution 1747, adopted March 24, 2007.

§ 561.304 UNSC Resolution 1803.

The term *UNSC Resolution 1803* means United Nations Security Council Resolution 1803, adopted March 3, 2008.

§ 561.305 UNSC Resolution 1929.

The term *UNSC Resolution 1929* means United Nations Security Council Resolution 1929, adopted June 9, 2010.

§ 561.306 Correspondent account.

The term *correspondent account* means an account established by a U.S. financial institution for a foreign financial institution to receive deposits from, or to make payments on behalf of, the foreign financial institution, or to handle other financial transactions related to such foreign financial institution.

§ 561.307 Payable-through account.

The term *payable-through account* means a correspondent account maintained by a U.S. financial institution for a foreign financial institution by means of which the foreign financial institution permits its customers to engage, either directly or through a subaccount, in banking activities usual in connection with the business of banking in the United States.

§ 561.308 Foreign financial institution.

The term *foreign financial institution* means any foreign entity that is engaged in the business of accepting deposits, making, granting, transferring, holding, or brokering loans or credits, or purchasing or selling foreign exchange, securities, commodity futures or options, or procuring purchasers and sellers thereof, as principal or agent. It includes but is not limited to depository institutions, banks, savings banks, money service businesses, trust companies, securities brokers and dealers, commodity futures and options brokers and dealers, forward contract and foreign exchange merchants, securities and commodities exchanges, clearing corporations, investment companies, employee benefit plans, and holding companies, affiliates, or subsidiaries of any of the foregoing. The term does not include the international financial institutions identified in 22 U.S.C. 262r(c)(2), the International Fund for Agricultural Development, the North American Development Bank, or any other international financial institution so notified by the Office of Foreign Assets Control.

§ 561.309 U.S. financial institution.

The term *U.S. financial institution* means any U.S. entity that is engaged in the business of accepting deposits, making, granting, transferring, holding, or brokering loans or credits, or purchasing or selling foreign exchange, securities, commodity futures or options, or procuring purchasers and sellers thereof, as principal or agent. It includes but is not limited to depository institutions, banks, savings banks, money service businesses, trust companies, insurance companies, securities brokers and dealers, commodity futures and options brokers and dealers, forward contract and foreign exchange merchants, securities and commodities exchanges, clearing corporations, investment companies, employee benefit plans, and U.S. holding companies, U.S. affiliates, or U.S. subsidiaries of any of the foregoing. This term includes those branches, offices, and agencies of foreign financial institutions that are located in the United States, but not such institutions' foreign branches, offices, or agencies.

§ 561.310 Money laundering.

The term *money laundering* means engaging in deceptive practices to obscure the nature of transactions involving the movement of illicit cash or illicit cash equivalent proceeds into, out of, or through a country, or into, out of, or through a financial institution, such that the transactions are made to appear legitimate.

§ 561.311 Agent.

The term *agent* includes an entity established by a person for purposes of conducting transactions on behalf of the person in order to conceal the identity of the person.

§ 561.312 Act of international terrorism.

The term *act of international terrorism* has the same definition as that provided under section 14 of the Iran Sanctions Act of 1996 (50 U.S.C. 1701 note). As of February 27, 2012, the term *act of international terrorism* means an act which is violent or dangerous to human life and that is a violation of the criminal laws of the United States or of any state or that would be a criminal violation if committed within the jurisdiction of the United States or any state and which appears to be intended to intimidate or coerce a civilian population; to influence the policy of a government by intimidation or coercion; or to affect the conduct of a government by assassination or kidnapping.

§ 561.313 Financial services.

The term *financial services* includes loans, transfers, accounts, insurance, investments, securities, guarantees, foreign exchange, letters of credit, and commodity futures or options.

§ 561.314 Knowingly.

The term *knowingly,* with respect to conduct, a circumstance, or a result, means that a person has actual knowledge, or should have known, of the conduct, the circumstance, or the result.

§ 561.315 Person.

The term *person* means an individual or entity.

§ 561.316 Entity.

The term *entity* means a partnership, association, trust, joint venture, corporation, or other organization.

§ 561.317 Money service businesses.

The term *money service businesses* means any agent, agency, branch, or office of any person doing business, whether or not on a regular basis or as an organized business concern, in one or more of the capacities listed in 31 CFR 103.11(uu)(1) through (5). The term does not include a bank or a person registered with, and regulated or examined by, the Securities and Exchange Commission or the Commodity Futures Trading Commission.

§ 561.318 Petroleum.

A mixture of hydrocarbons that exists in liquid phase in natural underground reservoirs and remains liquid at atmospheric pressure after passing through surface separating facilities. Also known as crude oil.

§ 561.319 Petroleum products.

The term *petroleum products* includes unfinished oils, liquefied petroleum gases, pentanes plus, aviation gasoline, motor gasoline, naphtha-type jet fuel, kerosene-type jet fuel, kerosene, distillate fuel oil, residual fuel oil, petrochemical feedstocks, special naphthas, lubricants, waxes, petroleum coke, asphalt, road oil, still gas, and miscellaneous products obtained from the processing of crude oil (including lease condensate), natural gas, and other hydrocarbon compounds. The term does not include natural gas, liquefied natural gas, biofuels, methanol, and other non-petroleum fuels.

§ 561.320 Iranian financial institution.

The term *Iranian financial institution* means any entity (including foreign branches), wherever located, organized under the laws of Iran or any jurisdiction within Iran, or owned or controlled by the Government of Iran, or in Iran, or owned or controlled by any of the foregoing, that is engaged in the business of accepting deposits, making, granting, transferring, holding, or brokering loans or credits, or purchasing or selling foreign exchange, securities, commodity futures or options, or procuring purchasers and sellers thereof, as principal or agent. It includes but is not limited to depository institutions, banks, savings banks, money service businesses, trust companies, insurance companies, securities brokers and dealers, commodity futures and options brokers and dealers, forward contract and foreign exchange merchants, securities and commodities exchanges, clearing corporations, investment companies, employee benefit plans, and holding companies, affiliates, or subsidiaries of any of the foregoing.

§ 561.321 Government of Iran.

The term *Government of Iran* includes:

(a) The state and the Government of Iran, as well as any political subdivision, agency, or instrumentality thereof;

(b) Any entity owned or controlled directly or indirectly by the foregoing;

(c) Any person to the extent that such person is, or has been, or to the extent that there is reasonable cause to believe that such person is, or has been, acting or purporting to act directly or indirectly on behalf of any of the foregoing; and

(d) Any person or entity identified by the Secretary of the Treasury to be the Government of Iran under 31 CFR part 560.

§ 561.322 Entity owned or controlled by the Government of Iran.

The phrase *entity owned or controlled by the Government of Iran* means any entity, including a financial institution, in which the Government of Iran owns a 50 percent or greater interest or a controlling interest, and any entity, including a financial institution, which is otherwise controlled by that government.

§ 561.323 Foreign financial institution owned or controlled by the government of a foreign country.

The phrase *foreign financial institution owned or controlled by the government of a foreign country* means any foreign financial institution, including a central bank of a foreign country, in which a government of a foreign country owns a 50 percent or greater interest and any foreign financial institution which is otherwise controlled by a government of a foreign country.

§ 561.324 Designated Iranian financial institution.

The term *designated Iranian financial institution* means any Iranian financial institution whose property and interests in property are blocked by the Department of the Treasury pursuant to any part of this chapter or any Executive order issued pursuant to the International Emergency Economic Powers Act (50 U.S.C. 1701 *et seq.*) and whose name is listed on the Specially Designated Nationals and Blocked Persons List on the Office of Foreign Assets Control's Web site, except for any Iranian financial institution whose property and interests in property are blocked solely pursuant to Executive Order 13599 of February 5, 2012.

Note to § 561.324: Facilitating significant transactions or providing significant financial services for a financial institution whose property and interests in property are blocked pursuant to parts 544 or 594 of this chapter in connection with Iran's proliferation of weapons of mass destruction or delivery systems for weapons of mass destruction or Iran's support for international terrorism has, since the enactment of CISADA on July 1, 2010, constituted an activity that could subject a foreign financial institution to prohibitions or strict conditions on correspondent accounts or payable-through accounts in the United States. See § 561.201.

§ 561.325 Financial transaction.

The term *financial transaction* means any transfer of value involving a financial institution.

§ 561.326 Privately owned foreign financial institution.

The phrase *privately owned foreign financial institution* means any foreign financial institution that is not owned or controlled by the government of a foreign country.

§ 561.327 Food, medicine, and medical devices.

(a) The term *food* means items that are intended to be consumed by and provide nutrition to humans or animals in Iran, including vitamins and minerals, food additives and supplements, and bottled drinking water, and seeds that germinate into items that are intended to be consumed by and provide nutrition to humans or animals in Iran. For purposes of this definition, the term *food* does not include:

(1) Alcoholic beverages, cigarettes, gum, or fertilizer; and

(2) The following excluded food items: castor beans, castor bean seeds, raw eggs, fertilized eggs (other than fish and shrimp roe), dried egg albumin, live animals, Rosary/Jequirity peas, non-food-grade gelatin powder, and peptones and their derivatives.

(b) The term *medicine* has the same meaning given the term ''drug'' in

section 201 of the Federal Food, Drug, and Cosmetic Act (21 U.S.C. 321) but does not include any item listed on the Commerce Control List in the Export Administration Regulations, 15 CFR part 774, supplement no. 1 (excluding items classified as EAR 99).

(c) The term *medical devices* has the meaning given the term ''device'' in section 201 of the Federal Food, Drug, and Cosmetic Act (21 U.S.C. 321) but does not include any item listed on the Commerce Control List in the Export Administration Regulations, 15 CFR part 774, supplement no. 1 (excluding items classified as EAR 99).

Subpart D—Interpretations

§ 561.401 Reference to amended sections.

Except as otherwise specified, reference to any provision in or appendix to this part or chapter or to any regulation, ruling, order, instruction, directive, or license issued pursuant to this part refers to the same as currently amended.

§ 561.402 Effect of amendment.

Unless otherwise specifically provided, any amendment, modification, or revocation of any provision in or appendix to this part or chapter or of any order, regulation, ruling, instruction, or license issued by the Office of Foreign Assets Control does not affect any act done or omitted, or any civil or criminal proceeding commenced or pending, prior to such amendment, modification, or revocation. All penalties, forfeitures, and liabilities under any such order, regulation, ruling, instruction, or license continue and may be enforced as if such amendment, modification, or revocation had not been made.

§ 561.403 Facilitation of certain efforts, activities, or transactions by foreign financial institutions.

For purposes of §§ 561.201 and 561.203 of this part, the term *facilitate* or *facilitated* used with respect to certain efforts, activities, or transactions refers to the provision of assistance by a foreign financial institution for those efforts, activities, or transactions, including, but not limited to, the provision of currency, financial instruments, securities, or any other transmission of value; purchasing; selling; transporting; swapping; brokering; financing; approving; guaranteeing; or the provision of other services of any kind; or the provision of personnel; or the provision of software, technology, or goods of any kind.

§ 561.404 Significant transaction or transactions; significant financial services; significant financial transaction.

In determining, for purposes of § 561.201(a)(5), whether a transaction is significant, whether transactions are significant, or whether financial services are significant, or, for purposes § 561.203(a), whether a financial transaction is significant, the Secretary of the Treasury may consider the totality of the facts and circumstances. As a general matter, the Secretary may consider some or all of the following factors:

(a) *Size, number, and frequency:* The size, number, and frequency of transactions, financial services, or financial transactions performed over a period of time, including whether the transactions, financial services, or financial transactions are increasing or decreasing over time and the rate of increase or decrease.

(b) *Nature:* The nature of the transaction(s), financial services, or financial transaction, including the type, complexity, and commercial purpose of the transaction(s), financial services, or financial transaction.

(c) *Level of Awareness; Pattern of Conduct:* (1) Whether the transaction(s), financial services, or financial transaction is performed with the involvement or approval of management or only by clerical personnel; and (2) Whether the transaction(s), financial services, or financial transaction is part of a pattern of conduct or the result of a business development strategy.

(d) *Nexus:* The proximity between the foreign financial institution engaging in the transaction(s) or providing the financial services and a blocked person described in § 561.201(a)(5), or between the foreign financial institution conducting or facilitating the financial transaction described in § 561.203 and the Central Bank of Iran or a designated Iranian financial institution, as defined in § 561.324. For example, a transaction or financial service in which a foreign financial institution provides brokerage or clearing services to, or maintains an account or makes payments for a blocked person described in paragraph (a)(5) of § 561.201, the Central Bank of Iran, or a designated Iranian financial institution in a direct customer relationship generally would be of greater significance than a transaction or financial service a foreign financial institution conducts for or provides to a blocked person described in § 561.201(a)(5), the Central Bank of Iran, or a designated Iranian financial institution indirectly or in a tertiary relationship.

(e) *Impact:* The impact of the transaction(s) or financial services on the objectives of the Comprehensive Iran Sanctions, Accountability, and Divestment Act of 2010, or of the financial transaction on the objectives of the National Defense Authorization Act for Fiscal Year 2012, including:

(1) The economic or other benefit conferred or attempted to be conferred on a blocked person described in § 561.201(a)(5), or on the Central Bank of Iran or designated Iranian financial institution, as described or defined in §§ 561.203 and 561.324;

(2) Whether and how the transaction(s), financial services, or financial transaction contributes to the proliferation of weapons of mass destruction or delivery systems for such weapons, to support for international terrorism, to the suppression of human rights, to an increase in Iran's crude oil revenues, or to connecting the Central Bank of Iran or a designated Iranian financial institution to the international financial system; and

(3) Whether the transaction(s), financial services, or financial transaction supports humanitarian activity or involves the payment of basic expenses as specified in and authorized pursuant to UNSC Resolution 1737 or the payment of extraordinary expenses that have been authorized by the Sanctions Committee established pursuant to UNSC Resolution 1737, or the payment for the sale of food, medicine, or medical devices to Iran.

(f) *Deceptive practices:* Whether the transaction(s), financial services, or financial transaction involves an attempt to obscure or conceal the actual parties or true nature of the transaction(s), financial services, or financial transaction or to evade sanctions; for example, whether the transaction enabled the Central Bank of Iran to facilitate the evasion of sanctions by a blocked person described in § 561.201(a)(5) or a designated Iranian financial institution, as defined in § 561.324.

(g) *Central Bank of Iran Reserves, Settlement Services, Foreign Currency Exchanges, and Official Development Assistance Repayment:* Other factors involved in making a determination of whether a transaction(s), financial service, or financial transaction is significant are whether the transaction solely involves the passive holding of Central Bank of Iran reserves by a foreign financial institution; whether the Central Bank of Iran's role is limited to providing settlement services or foreign currency exchanges in transactions between a non-designated Iranian financial institution and a

foreign financial institution; and whether the transaction involves only the repayment of official development assistance by the Central Bank of Iran or the transfer of funds required as a condition of Iran's membership in an international financial institution.

(h) *Other relevant factors:* Such other factors that the Secretary deems relevant on a case-by-case basis in determining the significance of a transaction(s), financial services, or financial transaction.

§ 561.405 Entities owned by a person whose property and interests in property are blocked.

A person whose property and interests in property are blocked pursuant to the International Emergency Economic Powers Act (50 U.S.C. 1701 *et seq.*) has an interest in all property and interests in property of an entity in which it owns, directly or indirectly, a 50 percent or greater interest. The property and interests in property of such an entity, therefore, are blocked, and such an entity is a person whose property and interests in property are blocked pursuant to the International Emergency Economic Powers Act (50 U.S.C. 1701 *et seq.*), regardless of whether the entity itself is listed on the Office of Foreign Assets Control's Specially Designated Nationals and Blocked Persons List.

§ 561.406 Country with primary jurisdiction over the foreign financial institution.

For purposes of § 561.203(h), a country includes any jurisdiction that has its own central bank or contains a separate financial sector authority, and a foreign financial institution (including its foreign branches outside of the United States) is under a country's primary jurisdiction if the foreign financial institution is organized under the laws of the country or any jurisdiction within that country.

§ 561.407 Conducting or facilitating a financial transaction with the Central Bank of Iran or a designated Iranian financial institution.

A foreign financial institution conducts or facilitates a financial transaction with the Central Bank of Iran or a designated Iranian financial institution if it maintains an account for such entities or engages in a financial transaction directly or indirectly with such entities.

Note to § 561.407: See § 561.404 for factors that may be considered in determining whether a financial transaction is significant, as required for the imposition of certain sanctions pursuant to this part.

Subpart E—Licenses, Authorizations, and Statements of Licensing Policy

§ 561.501 General and specific licensing procedures.

For provisions relating to licensing procedures, see part 501, subpart E of this chapter. Licensing actions taken pursuant to part 501 of this chapter with respect to the prohibitions contained in this part or conditions imposed pursuant to this part are considered actions taken pursuant to this part.

§ 561.502 Effect of license or authorization.

(a) No license or other authorization contained in this part, or otherwise issued by the Office of Foreign Assets Control, authorizes or validates any transaction effected prior to the issuance of such license or other authorization, unless specifically provided in such license or authorization.

(b) No regulation, ruling, instruction, or license authorizes any transaction prohibited under this part unless the regulation, ruling, instruction, or license is issued by the Office of Foreign Assets Control and specifically refers to this part. No regulation, ruling, instruction, or license referring to this part shall be deemed to authorize any transaction prohibited by any other part of this chapter unless the regulation, ruling, instruction, or license specifically refers to such part.

(c) Any regulation, ruling, instruction, or license authorizing any transaction otherwise prohibited under this part has the effect of removing a prohibition contained in this part from the transaction, but only to the extent specifically stated by its terms. Unless the regulation, ruling, instruction, or license otherwise specifies, such an authorization does not create any right, duty, obligation, claim, or interest in, or with respect to, any property which would not otherwise exist under ordinary principles of law.

§ 561.503 Exclusion from licenses.

The Office of Foreign Assets Control reserves the right to exclude any person, property, or transaction from the operation of any license or from the privileges conferred by any license. The Office of Foreign Assets Control also reserves the right to restrict the applicability of any license to particular persons, property, transactions, or classes thereof. Such actions are binding upon actual or constructive notice of the exclusions or restrictions.

§ 561.504 Transactions related to closing a correspondent account or payable-through account.

(a) During the 10-day period beginning on the effective date of the prohibition in § 561.201(c) or § 561.203(c)(2) on the maintaining of a correspondent account or a payable-through account for a foreign financial institution whose name is added to the Part 561 List, maintained on the Office of Foreign Assets Control's Web site (*www.treasury.gov/ofac*) on the Iran Sanctions page, U.S. financial institutions that maintain correspondent accounts or payable-through accounts for the foreign financial institution are authorized to:

(1) Process only those transactions through the account, or permit the foreign financial institution to execute only those transactions through the account, that are for the purpose of, and necessary for, closing the account; and

(2) Transfer the funds remaining in the correspondent account or the payable-through account to an account of the foreign financial institution located outside of the United States and close the correspondent account or the payable-through account.

(b) A report must be filed with the Office of Foreign Assets Control within 30 days of the closure of an account, providing full details on the closing of each correspondent account or payable-through account maintained by a U.S. financial institution for a foreign financial institution whose name is added to the Part 561 List, maintained on the Office of Foreign Assets Control's Web site (*www.treasury.gov/ofac*) on the Iran Sanctions page. Such report must include complete information on the closing of the account and on all transactions processed or executed through the account pursuant to this section, including the account outside of the United States to which funds remaining in the account were transferred. Reports should be addressed to the attention of the Sanctions, Compliance & Evaluations Division, Office of Foreign Assets Control, U.S. Department of the Treasury, 1500 Pennsylvania Avenue NW., Washington, DC 20220.

(c) Specific licenses may be issued on a case-by-case basis to authorize transactions by a U.S. financial institution with respect to a correspondent account or a payable-through account maintained by the U.S. financial institution for a foreign financial institution whose name is added to the Part 561 List, that are outside the scope of the transactions authorized in paragraph (a) of this section and/or that occur beyond the 10-

day period authorized in that paragraph. License applications should be filed in conformance with § 501.801 of the Reporting, Procedures and Penalties Regulations, 31 CFR part 501.

(d) Nothing in this section authorizes the opening of a correspondent account or a payable-through account for a foreign financial institution whose name appears on the Part 561 List.

Note to § 561.504: This section does not authorize a U.S. financial institution to unblock property or interests in property, or to engage in any transaction or dealing in property or interests in property, blocked pursuant to any other part of this chapter, in the process of closing a correspondent account or a payable-through account for a foreign financial institution whose name has been added to the Part 561 List, maintained on the Office of Foreign Assets Control's Web site (*www.treasury.gov/ofac*) on the Iran Sanctions page. *See* § 561.101.

Subpart F—Reports

§ 561.601 Records and reports.

For provisions relating to required records and reports, see part 501, subpart C, of this chapter.

Subpart G—Penalties

§ 561.701 Penalties.

(a) *Civil Penalties.* (1) As set forth in section 104(c) of the Comprehensive Iran Sanctions, Accountability, and Divestment Act of 2010 (Pub. L. 111–195) (''CISADA'') and section 1245(g)(2) of the National Defense Authorization Act for Fiscal Year 2012 (Pub. L. 112–81) (''NDAA''), a civil penalty not to exceed the amount set forth in section 206(b) of the International Emergency Economic Powers Act (''IEEPA'') (50 U.S.C. 1705(b)) may be imposed on any person who violates, attempts to violate, conspires to violate, or causes a violation of any prohibition contained in § 561.201 or § 561.203 or of any license set forth in or issued pursuant to this part.

(2) As set forth in section 104(d) of CISADA, a civil penalty not to exceed the amount set forth in section 206(b) of IEEPA may be imposed on a U.S. financial institution if:

(i) A person owned or controlled by the U.S. financial institution violates, attempts to violate, conspires to violate, or causes a violation of the prohibition in § 561.202 or of any order, regulation, or license set forth in or issued pursuant to this part concerning such prohibition; and

(ii) The U.S. financial institution knew or should have known that the person violated, attempted to violate, conspired to violate, or caused a violation of such prohibition.

Note to paragraph (a) of § 561.701: As of February 27, 2012, IEEPA provides for a maximum civil penalty not to exceed the greater of $250,000 or an amount that is twice the amount of the transaction that is the basis of the violation with respect to which the penalty is imposed.

(b) *Criminal Penalty.* As set forth in section 104(c) of CISADA and section 1245(g)(2) of the NDAA, a person who willfully commits, willfully attempts to commit, or willfully conspires to commit, or aids or abets in the commission of a violation of any prohibition contained in §§ 561.201 or 561.203 shall, upon conviction, be fined not more than $1,000,000, or if a natural person, be imprisoned for not more than 20 years, or both.

(c) *Adjustments to penalty amounts.* (1) The civil penalties provided in IEEPA are subject to adjustment pursuant to the Federal Civil Penalties Inflation Adjustment Act of 1990 (Pub. L. 101–410, as amended, 28 U.S.C. 2461 note).

(2) The criminal penalties provided in IEEPA are subject to adjustment pursuant to 18 U.S.C. 3571.

(d) Attention is also directed to 18 U.S.C. 1001, which provides that ''whoever, in any matter within the jurisdiction of the executive, legislative, or judicial branch of the Government of the United States, knowingly and willfully falsifies, conceals, or covers up by any trick, scheme, or device a material fact; makes any materially false, fictitious, or fraudulent statement or representation; or makes or uses any false writing or document knowing the same to contain any materially false, fictitious, or fraudulent statement or entry'' shall be fined under title 18, United States Code, imprisoned, or both.

(e) Violations of this part may also be subject to relevant provisions of other applicable laws.

§ 561.702 Pre-Penalty Notice; settlement.

(a) *When required.* If the Office of Foreign Assets Control has reason to believe that there has occurred a violation of any provision of this part or a violation of the provisions of any license, ruling, regulation, order, direction, or instruction issued by or pursuant to the direction or authorization of the Secretary of the Treasury pursuant to this part or otherwise under IEEPA and determines that a civil monetary penalty may be warranted, the Office of Foreign Assets Control may issue a Pre-Penalty Notice informing the alleged violator of the agency's intent to impose a monetary penalty. A Pre-Penalty Notice shall be in writing. The Pre-Penalty Notice may be issued whether or not another agency has taken any action with respect to the matter. For a description of the contents of a Pre-Penalty Notice, see Appendix A to part 501 of this chapter.

(b)(1) *Right to respond.* An alleged violator has the right to respond to a Pre-Penalty Notice by making a written presentation to the Office of Foreign Assets Control. For a description of the information that should be included in such a response, see Appendix A to part 501 of this chapter.

(2) *Deadline for response.* A response to a Pre-Penalty Notice must be made within 30 days of the date of service of the Pre-Penalty Notice. The failure to submit a response within the applicable time period set forth in this paragraph shall be deemed to be a waiver of the right to respond.

(i) *Computation of time for response.* A response to a Pre-Penalty Notice must be postmarked or date-stamped by the U.S. Postal Service (or foreign postal service, if mailed abroad) or courier service provider (if transmitted to the Office of Foreign Assets Control by courier) on or before the 30th day after the postmark date on the envelope in which the Pre-Penalty Notice was mailed. If the Pre-Penalty Notice was personally delivered by a non-U.S. Postal Service agent authorized by the Office of Foreign Assets Control, a response must be postmarked or date-stamped on or before the 30th day after the date of delivery.

(ii) *Extensions of time for response.* If a due date falls on a federal holiday or weekend, that due date is extended to include the following business day. Any other extensions of time will be granted, at the discretion of the Office of Foreign Assets Control, only upon specific request to the Office of Foreign Assets Control.

(3) *Form and method of response.* A response to a Pre-Penalty Notice need not be in any particular form, but it must be typewritten and signed by the alleged violator or a representative thereof, must contain information sufficient to indicate that it is in response to the Pre-Penalty Notice, and must include the Office of Foreign Assets Control identification number listed on the Pre-Penalty Notice. A copy of the written response may be sent by facsimile, but the original also must be sent to the Office of Foreign Assets Control Enforcement Division by mail or courier and must be postmarked or date-stamped in accordance with paragraph (b)(2) of this section.

(c) *Settlement.* Settlement discussion may be initiated by the Office of Foreign Assets Control, the alleged violator, or the alleged violator's authorized

representative. For a description of practices with respect to settlement, see Appendix A to part 501 of this chapter.

(d) *Guidelines.* Guidelines for the imposition or settlement of civil penalties by the Office of Foreign Assets Control are contained in Appendix A to part 501 of this chapter.

(e) *Representation.* A representative of the alleged violator may act on behalf of the alleged violator, but any oral communication with the Office of Foreign Assets Control prior to a written submission regarding the specific allegations contained in the Pre-Penalty Notice must be preceded by a written letter of representation, unless the Pre-Penalty Notice was served upon the alleged violator in care of the representative.

§ 561.703 Penalty imposition.

If, after considering any timely written response to the Pre-Penalty Notice and any relevant facts, the Office of Foreign Assets Control determines that there was a violation by the alleged violator named in the Pre-Penalty Notice and that a civil monetary penalty is appropriate, the Office of Foreign Assets Control may issue a Penalty Notice to the violator containing a determination of the violation and the imposition of the monetary penalty. For additional details concerning issuance of a Penalty Notice, see Appendix A to part 501 of this chapter. The issuance of the Penalty Notice shall constitute final agency action. The violator has the right to seek judicial review of that final agency action in federal district court.

§ 561.704 Administrative collection; referral to United States Department of Justice.

In the event that the violator does not pay the penalty imposed pursuant to this part, the matter may be referred for administrative collection measures by the Department of the Treasury or to the United States Department of Justice for appropriate action to recover the penalty in a civil suit in a federal district court.

Subpart H–Procedures

§ 561.801 Procedures.

For license application procedures and procedures relating to amendments, modifications, or revocations of licenses; administrative decisions; rulemaking; and requests for documents pursuant to the Freedom of Information and Privacy Acts (5 U.S.C. 552 and 552a), see part 501, subpart E, of this chapter.

§ 561.802 Delegation by the Secretary of the Treasury.

Any action that the Secretary of the Treasury is authorized to take pursuant to subsections 104(c), (d), (h), or (i) of the Comprehensive Iran Sanctions, Accountability, and Divestment Act of 2010 (Pub. L. 111–195) (22 U.S.C. 8501–8551), pursuant to section 8 of Executive Order 13553 of September 28, 2010 (3 CFR, 2010 Comp., p. 253), or pursuant to section 10 of Executive Order 13599 of February 5, 2012, and any action of the Secretary of the Treasury described in this part, may be taken by the Director of the Office of Foreign Assets Control or by any other person to whom the Secretary of the Treasury has delegated authority so to act.

§ 561.803 Consultations.

In implementing section 104 of the Comprehensive Iran Sanctions, Accountability, and Divestment Act of 2010 (Pub. L. 111–195) (22 U.S.C. 8501–8551), the Secretary of the Treasury shall consult with the Secretary of State and may, in the sole discretion of the Secretary of the Treasury, consult with such other agencies and departments and such other interested parties as the Secretary considers appropriate.

Subpart I—Paperwork Reduction Act

§ 561.901 Paperwork Reduction Act notice.

For approval by the Office of Management and Budget (OMB) under the Paperwork Reduction Act of 1995 (44 U.S.C. 3507) of the information collections relating to the recordkeeping and reporting requirements of § 561.601, licensing procedures (including those pursuant to statements of licensing policy), and other procedures, *see* § 501.901 of this chapter. The information collection in § 561.504(b) has been approved by OMB and assigned control number 1505–0243. An agency may not conduct or sponsor, and a person is not required to respond to, a collection of information unless it displays a valid control number assigned by OMB.

Dated: February 21, 2012.

Adam J. Szubin,

Director, Office of Foreign Assets Control.

Approved: February 21, 2012.

David S. Cohen,

Under Secretary, Office of Terrorism and Financial Intelligence, Department of the Treasury.

[FR Doc. 2012–4472 Filed 2–24–12; 8:45 am]

BILLING CODE 4810–AL–P

Reader Aids

Federal Register

Vol. 77, No. 38

Monday, February 27, 2012

CUSTOMER SERVICE AND INFORMATION

Federal Register/Code of Federal Regulations	
General Information, indexes and other finding aids	**202–741–6000**
Laws	**741–6000**
Presidential Documents	
Executive orders and proclamations	**741–6000**
The United States Government Manual	**741–6000**
Other Services	
Electronic and on-line services (voice)	**741–6020**
Privacy Act Compilation	**741–6064**
Public Laws Update Service (numbers, dates, etc.)	**741–6043**
TTY for the deaf-and-hard-of-hearing	**741–6086**

ELECTRONIC RESEARCH

World Wide Web

Full text of the daily Federal Register, CFR and other publications is located at: **www.fdsys.gov.**

Federal Register information and research tools, including Public Inspection List, indexes, and links to GPO Access are located at: **www.ofr.gov.**

E-mail

FEDREGTOC-L (Federal Register Table of Contents LISTSERV) is an open e-mail service that provides subscribers with a digital form of the Federal Register Table of Contents. The digital form of the Federal Register Table of Contents includes HTML and PDF links to the full text of each document.

To join or leave, go to **http://listserv.access.gpo.gov** and select *Online mailing list archives, FEDREGTOC-L, Join or leave the list (or change settings);* then follow the instructions.

PENS (Public Law Electronic Notification Service) is an e-mail service that notifies subscribers of recently enacted laws.

To subscribe, go to **http://listserv.gsa.gov/archives/publaws-l.html** and select *Join or leave the list (or change settings);* then follow the instructions.

FEDREGTOC-L and **PENS** are mailing lists only. We cannot respond to specific inquiries.

Reference questions. Send questions and comments about the Federal Register system to: **fedreg.info@nara.gov**

The Federal Register staff cannot interpret specific documents or regulations.

Reminders. Effective January 1, 2009, the Reminders, including Rules Going Into Effect and Comments Due Next Week, no longer appear in the Reader Aids section of the Federal Register. This information can be found online at **http://www.regulations.gov.**

CFR Checklist. Effective January 1, 2009, the CFR Checklist no longer appears in the Federal Register. This information can be found online at **http://bookstore.gpo.gov/.**

FEDERAL REGISTER PAGES AND DATE, FEBRUARY

4885–5154 1
5155–5372 2
5373–5680 3
5681–5986 6
5987–6462 7
6463–6662 8
6663–6940 9
6941–7516 10
7517–8088 13
8089–8716 14
8717–9162 15
9163–9514 16
9515–9836 17
9837–10350 21
10351–10648 22
10649–10938 23
10939–11382 24
11383–11736 27

CFR PARTS AFFECTED DURING FEBRUARY

At the end of each month the Office of the Federal Register publishes separately a List of CFR Sections Affected (LSA), which lists parts and sections affected by documents published since the revision date of each title.

1 CFR

Proposed Rules:
51 11414

3 CFR

Proclamations:
8775 5373
8776 5375
8777 5377

Executive Orders:
13598 5371
13599 6659
13600 8713

Administrative Orders:
Memorandums:
Memorandum of January 18, 2012 5679
Memorandum of January 27, 2012 11371
Memorandum of January 30, 2012 11373
Memorandum of February 3, 2012 11375
Memorandum of February 17, 2012 10935
Memorandum of February 21, 2012 10939
Notices:
Notice of February 3, 2012 5985
Notice of February 23, 2012 (Cuba) 11379
Notice of February 23, 2012 (Libya) 11381

5 CFR

532 11383
1630 11383
1631 11383
1632 11383
2471 5987
2472 5987

Proposed Rules:
213 6022
1600 6504
1601 6504
1604 6504
1605 6504
1650 6504
1651 6504
1653 6504
1655 6504
1690 6504

7 CFR

27 5379
205 8089
301 5381
985 5385
1170 8717
1491 6941
4279 7517
4290 4885

Proposed Rules:
205 ..... 5415, 5717
211 10981
235 10981
4279 7546

8 CFR

103 5681
235 5681

Proposed Rules:
1292 9590

10 CFR

72 9515
110 11384
431 10292
780 4885
781 4887

Proposed Rules:
20 8751
30 8751
40 8751
50 8751
61 10401
70 8751
72 ..... 8751, 9591
429 8526
430 ..... 7547, 8178, 8526
431 ..... 7282, 10997

12 CFR

741 5155
1003 8721
1005 6194
Ch. XII 10351

Proposed Rules:
630 8179
703 5416
741 4927
1005 6310
1090 9592

13 CFR

121 ..... 7490, 10943

Proposed Rules:
115 5721
121 11001
300 6517
301 6517
302 6517
303 6517
304 6517
305 6517
306 6517
307 6517
308 6517
310 6517
311 6517
314 6517

14 CFR

1 9163

21 11385
25 ....5990, 6945, 11385
27 4890
29 4890
39 ....5167, 5386, 5991, 5994, 5996, 5998, 6000, 6003, 6663, 6666, 6668, 6669, 6671, 7518, 7521, 7523, 8092, 8722, 9166, 9518, 9520, 9837, 10352, 10355, 10950, 10952
71 ....5168, 5169, 5170, 5691, 6463, 7525, 9839, 9840, 9841, 10649
97 ....5693, 5694, 9169, 9170
121 11385
129 11385
1215 6949

Proposed Rules:
Ch. 1 6694
39 ....5195, 5418, 5420, 5423, 5425, 5427, 5724, 5726, 5728, 5730, 6023, 6518, 6520, 6522, 6525, 6685, 6688, 6692, 7005, 7007, 8181, 9868, 9869, 9871, 9874, 10403, 10406, 10409, 10411, 10413, 10691, 10693, 11017, 11019, 11416, 11418, 11421
71 ....5429, 5733, 6026, 9876
135 7010

15 CFR

730 10357
744 ....5387, 10357
748 10953
801 10958
902 5389

Proposed Rules:
336 5440

16 CFR

Ch. II 10358
1130 9522

Proposed Rules:
Ch. II 8751
1223 7011

17 CFR

4 ....9734, 11252
22 6336
23 9734
145 11252
147 11252
190 6336
200 8094
275 10358

Proposed Rules:
4 11345
75 8332

18 CFR

1 4891
2 ....4891, 8095
3 4891
4 4891
5 4891
11 4891
12 4891
40 7526
131 4891
157 ....4891, 8724
284 4891
292 9842
376 4891
380 4891
381 10650
385 4891
806 8095

Proposed Rules:
284 10415

19 CFR

10 10368
163 10368
Ch. II 8114
351 8101

Proposed Rules:
4 ....6704, 10622
10 10622
18 10622
19 10622
113 10622
122 ....6704, 10622
123 10622
141 10622
142 10622
143 10622
144 10622
146 10622
151 10622
162 6527
181 10622
357 5440

20 CFR

404 ....10651, 10657
416 ....10651, 10657
655 10038
672 9112

Proposed Rules:
200 8183
320 8183
345 8183
404 ....5734, 7549

21 CFR

1 ....5175, 10658, 10662
7 5175
16 5175
101 9842
201 5696
312 5696
314 5696
500 9528
510 ....4895, 5700
520 ....4895, 5700
522 4895
524 4895
529 4895
558 4895
601 5696
606 6463
610 ....5696, 6463
640 6463
801 5696
807 5696
809 5696
812 5696
814 5696
870 8117

Proposed Rules:
173 5201
177 9608
876 9610

22 CFR

22 5177
41 8119
51 5177

24 CFR

5 5662
200 5662
203 ....5662, 9177
236 5662
400 5662
570 5662
574 5662
882 5662
891 5662
954 6673
982 5662

Proposed Rules:
Ch. II 10695
202 7558

25 CFR

514 5178
523 5183

Proposed Rules:
524 9179
539 9179
577 9179
580 9179
581 9179
582 9179
583 9179
584 9179
585 9179

26 CFR

1 ....5700, 6005, 8120, 8127, 8143, 8144, 9844, 9845, 9846
54 ....8668, 8706, 8725
301 10370
602 8668

Proposed Rules:
1 ....5442, 5443, 5454, 6027, 8184, 8573, 9022, 9877, 10422
48 6028
301 9022

27 CFR

Proposed Rules:
19 6038
447 5735
478 5460
479 5735

28 CFR

Proposed Rules:
16 9878
26 7559

29 CFR

503 10038
1602 5396
2550 5632
2590 ....8668, 8706, 8725
4007 6675
4022 8730

Proposed Rules:
552 11021
825 8960

30 CFR

943 8144

Proposed Rules:
935 8185
942 5740

31 CFR

1 9847
33 11700
543 6463
546 6463
547 6463
561 11724
1010 8148
1029 8148

33 CFR

100 ....6007, 6954
110 6010
117 ....5184, 5185, 5186, 5398, 6007, 6012, 6013, 6465, 6962, 6963, 10371, 10372, 10960
147 6007
165 ....4897, 4900, 5398, 6007, 6013, 6954, 9528, 9847, 9850, 10960, 11387

Proposed Rules:
100 ....5463, 6039, 6708
110 5743
117 ....5201, 6042
147 ....10707, 10711
165 ....5463, 5747, 7025, 9879, 11423, 11426, 11434

36 CFR

7 9852

Proposed Rules:
242 5204
1195 6916

37 CFR

Proposed Rules:
42 ....6868, 6879, 7028, 7040, 7060, 7080, 7094
90 6879

38 CFR

4 6466
17 5186
59 10663

39 CFR

230 6676
233 11437
3001 6676
3025 6676

Proposed Rules:
111 5470

40 CFR

52 ....5191, 5400, 5700, 5703, 5706, 5709, 5710, 6016, 6467, 6963, 7531, 7535, 7536, 9529, 10324
60 ....8160, 9304
62 6681
63 ....9304, 11390
81 ....4901, 9532
93 11394
97 ....5710, 10324, 10342
98 10387
140 11401
174 6471
180 ....4903, 8731, 8736, 8741, 8746, 10381, 10962, 10968
302 10387
721 6476

Proposed Rules:
Ch. I 10451
50 8197
51 8197
52 ....4937, 4940, 5207, 5210,

6044, 6529, 6711, 6727, 6743, 10423, 10424, 10430, 11022, 11452
60 8209
63 ....6628, 8576, 11476
81 ....4940, 6727, 6743, 8211
97 10350
98 ....10434, 11039
141 ....5471, 9882
142 ....5471, 9882
180 8755
280 8757
281 8757
302 10450
721 4947

41 CFR

Proposed Rules:
60-741 7108

42 CFR

71 6971
81 5711
412 4908
413 4908
431 11678
476 4908
Proposed Rules:
68 10455
71 7108
401 9179
405 9179
447 5318
489 5213

44 CFR

64 ....7537, 9856
67 ....6976, 6980, 7540

45 CFR

147 ....8668, 8706, 8725
155 11700
670 5403
1611 4909
Proposed Rules:
60 9138
61 9138
1357 9883

46 CFR

160 9859
251 5193
252 5193
276 5193
280 5193
281 5193
282 5193
283 5193
Proposed Rules:
327 5217

47 CFR

1 6479
2 ....4910, 5406
15 4910
18 4910
73 6481
76 6479
97 5406
Proposed Rules:
64 4948
76 9187

48 CFR

209 11354
215 11355
216 11354
219 11367
232 11355
234 11355
242 11355
244 11355
245 11355
252 ....10976, 11354, 11355
422 5714
519 10665
532 6985
552 ....6985, 10665
704 8166
713 8166
714 8166
715 8166
716 8166
744 8166
752 8166
1511 8174
Proposed Rules:
10 10714
31 10461
52 10461
242 9617
422 5750

49 CFR

173 9865
199 10666
242 6482
382 10461
391 10461
395 7544
571 11626
572 11651
575 4914
Proposed Rules:
191 5472
192 5472
195 5472
214 6412
232 6412
243 6412
385 7562
390 7562
395 7562
611 5750
821 6760
826 6760

50 CFR

17 ....8450, 8632, 10810
29 5714
216 ....4917, 6682
218 4917
223 5880
224 ....5880, 5914
622 ....5413, 6988, 8749, 11411
648 ....5414, 7000, 7544, 10668, 10977, 10978
665 6019
679 ....5389, 6492, 6683, 8176, 8177, 9588, 9589, 10400, 10668, 10669, 11412
680 6492
Proposed Rules:
17 ....4973, 9618, 9884, 11061
100 5204
218 6771
300 ....5473, 8758, 8759
600 5751
622 11477
648 ....8776, 8780, 10463
660 10466

LIST OF PUBLIC LAWS

This is a continuing list of public bills from the current session of Congress which have become Federal laws. It may be used in conjunction with "P L U S" (Public Laws Update Service) on 202–741–6043. This list is also available online at *http://www.archives.gov/federal-register/laws*.

The text of laws is not published in the **Federal Register** but may be ordered in "slip law" (individual pamphlet) form from the Superintendent of Documents, U.S. Government Printing Office, Washington, DC 20402 (phone, 202–512–1808). The text will also be made available on the Internet from GPO's Federal Digital System (FDsys) at *http://www.gpo.gov/fdsys*. Some laws may not yet be available.

H.R. 588/P.L. 112–94
To redesignate the Noxubee National Wildlife Refuge as the Sam D. Hamilton Noxubee National Wildlife Refuge. (Feb. 14, 2012; 126 Stat. 10)

H.R. 658/P.L. 112–95
FAA Modernization and Reform Act of 2012 (Feb. 14, 2012; 126 Stat. 11)

Last List February 14, 2012

Public Laws Electronic Notification Service (PENS)

PENS is a free electronic mail notification service of newly enacted public laws. To subscribe, go to *http://listserv.gsa.gov/archives/publaws-l.html*

Note: This service is strictly for E-mail notification of new laws. The text of laws is not available through this service. **PENS** cannot respond to specific inquiries sent to this address.