40 CFR 52.02(a). Thus, in reviewing SIP submissions, EPA's role is to approve state choices, provided that they meet the criteria of the Clean Air Act. Accordingly, this action merely approves state law as meeting Federal requirements and does not impose additional requirements beyond those imposed by state law. For that reason, this action:

- Is not a ''significant regulatory action'' subject to review by the Office of Management and Budget under Executive Order 12866 (58 FR 51735, October 4, 1993);
- Does not impose an information collection burden under the provisions of the Paperwork Reduction Act (44 U.S.C. 3501 *et seq.*);
- Is certified as not having a significant economic impact on a substantial number of small entities under the Regulatory Flexibility Act (5 U.S.C. 601 *et seq.*);
- Does not contain any unfunded mandate or significantly or uniquely affect small governments, as described in the Unfunded Mandates Reform Act of 1995 (Pub. L. 104–4);
- Does not have Federalism implications as specified in Executive Order 13132 (64 FR 43255, August 10, 1999);
- Is not an economically significant regulatory action based on health or safety risks subject to Executive Order 13045 (62 FR 19885, April 23, 1997);
- Is not a significant regulatory action subject to Executive Order 13211 (66 FR 28355, May 22, 2001);
- Is not subject to requirements of Section 12(d) of the National Technology Transfer and Advancement Act of 1995 (15 U.S.C. 272 note) because application of those requirements would be inconsistent with the Clean Air Act; and
- Does not provide EPA with the discretionary authority to address, as appropriate, disproportionate human health or environmental effects, using practicable and legally permissible methods, under Executive Order 12898 (59 FR 7629, February 16, 1994).

In addition, this rule does not have tribal implications as specified by Executive Order 13175 (65 FR 67249, November 9, 2000), because the SIP is not approved to apply in Indian country located in the state, and EPA notes that it will not impose substantial direct costs on tribal governments or preempt tribal law.

The Congressional Review Act, 5 U.S.C. 801 *et seq.,* as added by the Small Business Regulatory Enforcement Fairness Act of 1996, generally provides that before a rule may take effect, the agency promulgating the rule must submit a rule report, which includes a copy of the rule, to each House of the Congress and to the Comptroller General of the United States. EPA will submit a report containing this action and other required information to the U.S. Senate, the U.S. House of Representatives, and the Comptroller General of the United States prior to publication of the rule in the **Federal Register.** A major rule cannot take effect until 60 days after it is published in the **Federal Register.** This action is not a ''major rule'' as defined by 5 U.S.C. 804(2).

Under section 307(b)(1) of the Clean Air Act, petitions for judicial review of this action must be filed in the United States Court of Appeals for the appropriate circuit by July 20, 2012. Filing a petition for reconsideration by the Administrator of this final rule does not affect the finality of this action for the purposes of judicial review nor does it extend the time within which a petition for judicial review may be filed, and shall not postpone the effectiveness of such rule or action. This action may not be challenged later in proceedings to enforce its requirements. (See section 307(b)(2)).

List of Subjects in 40 CFR Part 52

Environmental protection, Air pollution control, Carbon monoxide, Incorporation by reference, Intergovernmental relations, Lead, Nitrogen dioxide, Ozone, Particulate matter, and Reporting and recordkeeping requirements, Sulfur oxides, Volatile organic compounds.

Authority: 42 U.S.C. 7401 *et seq.*

Dated: May 4, 2012.

Michelle L. Pirzadeh,

Deputy Regional Administrator, Region 10.

40 CFR part 52 is amended as follows:

PART 52—[AMENDED]

■ 1. The authority citation for Part 52 continues to read as follows:

Authority: 42 U.S.C. 7401 *et seq.*

Subpart MM—Oregon

■ 2. Section 52.1991 is added to read as follows:

§ 52.1991 Section 110(a)(2) infrastructure requirements.

On September 25, 2008, Oregon Department of Environmental Quality submitted a certification to address the requirements of CAA Section 110(a)(1) and (2) for the 1997 8-hour ozone NAAQS. EPA approves the submittal as meeting the following 110(a)(2) infrastructure elements for the 1997 8-hour ozone NAAQS: (A), (B), (C), (D)(ii), (E), (F), (G), (H), (J), (K), (L), and (M).

[FR Doc. 2012–12107 Filed 5–18–12; 8:45 am]

BILLING CODE 6560–50–P

DEPARTMENT OF COMMERCE

National Oceanic and Atmospheric Administration

50 CFR Part 223

[Docket No. 120427423–2423–02]

RIN 0648–AW93

Sea Turtle Conservation; Shrimp and Summer Flounder Trawling Requirements

AGENCY: National Marine Fisheries Service (NMFS), National Oceanic and Atmospheric Administration (NOAA), Commerce.

ACTION: Final rule.

SUMMARY: This rule revises the turtle excluder device (TED) requirements to allow the use of new materials and to modify existing approved TED designs. Specifically, this rule allows using flat bar, rectangular pipe, and oval pipe as construction material in currently-approved TED grids; using a brace bar on hard TEDs; increasing the maximum mesh size on escape flaps from 1⅝ to 2 inches (4.1 to 5.1 cm); including the Boone Big Boy TED for use in the shrimp fisheries; using three large TED and Boone Wedge Cut escape openings; and using the Chauvin shrimp deflector to improve shrimp retention. This rule also adds a TED for use in the summer flounder fishery. Additionally, the rule corrects the TED regulations to rectify an oversight regarding the maximum size chain that can be used on the Parker TED escape opening flap.

DATES: The effective date of this rule is June 20, 2012.

ADDRESSES: NMFS, Southeast Regional Office, Protected Resources Division, 263 13th Ave. South, St. Petersburg, FL 33701–5505.

FOR FURTHER INFORMATION CONTACT: Michael Barnette, NMFS, Southeast Regional Office, at the address above, or at (727) 824–5312.

SUPPLEMENTARY INFORMATION:

Background

On September 2, 2010, we proposed modifying the TED requirements, and solicited public comments on allowable TED modifications and additional certified TED designs (75 FR 53925). A detailed description of the alternative construction materials and TED designs

is provided in the proposed rule and is not repeated here.

Summary of Comments Received

In response to our request for public comments, we received written comments from four commenters.

Comment 1: The Boone Wedge Cut escape opening did not pass the small turtle testing protocol when used in a bottom-opening configuration. Therefore, it should not be certified for use as a bottom-opening TED.

Response: During the June 2008 small turtle TED testing, the Boone Big Boy TED was tested in a bottom-opening configuration. Sinkey Boone installed this TED at an angle of 54 degrees, and included the Boone Wedge Cut escape opening. We used a 32-inch by 44-inch bent-bar TED installed at 53 degrees with a double cover flap as the control TED in both a top- and bottom-opening configuration to test the configuration. In a sample size of 25 turtles each, the top-opening control TED captured 0 turtles while the bottom-opening control TED captured 1 turtle. A turtle is considered captured if it fails to escape through the TED within 5 minutes.

Based on the performance of the control TED to be considered a viable alternative any candidate TED in a top-opening configuration must capture no more than 1 turtle, while a candidate TED in a bottom-opening configuration must capture no more than 3 turtles, based on the statistical protocol of the ''small turtle test'' (55 FR 41092, October 9, 1990). The test results for the bottom-opening Boone Big Boy TED at 54 degrees with the Boone Wedge Cut escape opening were 24 escapes and 1 capture with a mean escape time of 44.3 seconds. Accordingly, the bottom-opening Boone Big Boy TED passes the statistical protocol for the small turtle test.

Comment 2: The Boone Wedge Cut escape opening was not tested at the maximum proposed angle of 55 degrees in a top-opening configuration. Previous testing has shown that changes in a few degrees of TED angle at 45 degrees with a straight-bar grid can have significant effects on sea turtle mortality. The Boone Wedge Cut escape opening in the top-opening configuration should not be certified above 50 degrees until further testing is conducted. Additionally, the Boone Big Boy TED and Boone Wedge Cut escape opening should be retested using maximum allowable TED angles and should not be considered for certification unless they pass small turtle testing protocol for both top- and bottom-opening configurations.

Response: The Boone Wedge Cut escape opening was first evaluated in Panama City in June 2002. The Boone Wedge Cut escape opening consists of installing a webbing wedge in the TED extension as an alternative to removing the extension webbing for the TED escape opening. The Boone Wedge Cut escape opening modification was tested under the leatherback sea turtle model test using a 32-inch bent-bar TED and failed. The Boone Wedge Cut escape opening was not evaluated with the small turtle test at that time.

In 2003, the Boone Wedge Cut escape opening was submitted for small turtle testing as an alternate method of achieving the required minimum 71-inch escape opening. The Boone Wedge Cut escape opening was installed into a bottom-opening, straight-bar grid with 2-inch bar spacing installed at an angle of 55 degrees. As a control, we used a TED with a top-opening 32-inch by 44-inch bent-bar. In a sample size of 25 turtles, the bottom-opening control TED captured 0 turtles. Based on the performance of the control TED, a candidate TED could capture no more than 1 turtle to pass, based on the statistical protocol of the ''small turtle test'' (55 FR 41092, October 9, 1990). The Boone Wedge Cut escape opening captured 2 turtles by interactions with chafing rope near the escape opening during testing, and so failed the small turtle test.

In 2004, the Boone Wedge Cut escape opening was tested with a Boone Big Boy TED installed at 53-degrees in a top-opening configuration. The frame was wrapped with 0.25-inch polypropylene rope as chafing gear. Prior evaluations of this style TED (i.e., 2003 testing) demonstrated that straight-bar TEDs in a bottom-opening configuration with 0.50-inch rope chafing gear present a problem for turtle exclusion, as turtles can get hung up on this rope. We used a 32-inch by 44-inch bent-bar TED installed at 53 degrees with a double cover flap as the control TED. In a sample size of 25 turtles, the top-opening control TED captured 2 turtles. Based on the performance of the control TED, a candidate TED must capture no more than 4 turtles to pass the ''small turtle test'' (55 FR 41092, October 9, 1990). The Boone Wedge Cut escape opening and frame wrapped with 0.25-inch polypropylene rope captured 0 turtles, and therefore passes the statistical protocol for the small turtle test.

In summary, the Boone Wedge Cut escape opening passed the small turtle testing protocol at 53 degrees in a top-opening configuration and at 54 degrees in a bottom-opening configuration. Previous testing and rulemaking established 55 degrees as the maximum allowable TED installation angle, as the likelihood of turtle entrapment does begin to increase greatly at angles steeper than that threshold. The testing of the Boone Wedge Cut escape opening and frame wrapped with 0.25-inch polypropylene rope demonstrates that it may be approved in both top- and bottom-opening configurations at TED angles up to the maximum allowable angle for hard TEDs.

Comment 3: The original Parker TED design did not pass the small turtle testing protocol due to serious design flaws; sea turtles were entangled and captured in the large mesh ramp designed to deflect turtles to the escape opening. The large mesh ramp may potentially entangle and drown turtles, particularly when the net has been stretched from daily use. All certification testing was conducted with new nets that were not in daily use. The Parker TED should be re-evaluated with the small turtle testing protocol, remote cameras, and nets that have been well-used by fishermen.

Response: Soft TEDs have been evaluated using the small turtle testing protocol since 1988. After many trials throughout the years, we developed a successful TED, called the ''Parker'' TED, which used a 22-mesh panel installed with 8-inch mesh in the body and 4-inch mesh in the wings, with the 4-inch mesh extending all the way to the apex (escape opening). During small turtle testing protocol testing in 1997, this Parker TED design worked well and did not exhibit any pocketing that would allow a turtle to become trapped. In a sample size of 25 turtles, this Parker TED design captured 0 turtles.

Since that testing, we have learned much about the proper technique of installing a soft panel in a trawl to prevent small turtles from becoming trapped. Extensive testing has demonstrated that the correct taper and correct mesh size are essential components for an effective soft TED. As with hard TEDs, the soft TED must be maintained to assure effectiveness and compliance with TED regulations, and mesh stretching is not unique to the soft TED. It is possible that large mesh stretches in the soft TED panel over time, and fishermen using this TED need to check mesh sizes in these panels to ensure that meshes have not become stretched beyond the allowable specifications. For these reasons, we disagree that the Parker TED needs to be re-evaluated.

Comment 4: The Boone Big Boy TED submitted to NMFS for testing was constructed of steel rod with a minimum outside diameter of ½ inch for the frame and with 4-inch bar

spacing; however, the Boone Big Boy TED is typically constructed of steel rod with a minimum outside diameter of ⅜ inch for the frame and with 2-inch bar spacing. The Boone Big Boy TED should allow use of ⅜-inch steel rod for construction of the TED frame.

Response: TED integrity is relevant to sea turtle exclusion or escapement, and we established minimum construction material requirements to maintain TED integrity and performance during fishing operations. Based upon many years of experience designing, testing and monitoring TEDs, NMFS' gear specialists with the Southeast Fisheries Science Center's Harvesting Systems and Engineering Branch have determined a ⅛-inch difference in steel rod diameter will (or does) not negatively affect the structural integrity of the Boone Big Boy TED, nor does it adversely affect sea turtle exclusion. As an example, the minimum outside diameter for steel rod used in a standard single-grid hard TED (i.e., minimum horizontal and vertical measurement of 32 inches) is ¼ inch. As the dimensions for a single-grid hard TED are minimums, one could legally construct, for example, a single-grid hard TED with horizontal and vertical measurements of 36.5 and 48 inches, respectively, with a ¼-inch steel rod frame, which would be the same as the dimensions of the Boone Big Boy TED. Single-grid hard TEDs with these dimensions have passed the small turtle test escapement protocols. Therefore, this final rule specifies a ⅜-inch minimum outside diameter of steel rod for the Boone Big Boy TED, not the ½-inch diameter originally included in the proposed rule.

Comment 5: Alternative management actions, such as the use of sea turtle grow-out facilities operated by the commercial fishing industry or electronic avoidance equipment, should be utilized instead of TEDs to reduce sea turtle interactions.

Response: While there may be alternative measures to reduce sea turtle bycatch in trawl fisheries, the submitted suggestions are beyond the scope of this action. At this time, NMFS cannot add or substitute actions to a rule that were not originally proposed. Nevertheless, NMFS appreciates the input and contribution from the public on the need and appropriateness of alternative options. NMFS continues to consider alternative measures, and if we determine such measures become appropriate, we will propose them in a future rulemaking.

Comment 6: Fishermen should be involved in TED development, and should be financially rewarded for innovation in reducing sea turtle interactions.

Response: NMFS agrees that fishermen should be involved in TED development. We note that the new materials and alternative designs included in this rule were tested, developed, and advocated by commercial fishermen. However, while we agree that fishermen should be (and are) involved in TED development, offering financial incentives or awards for TED development is beyond the scope of this action.

Summary of Changes From the Proposed Rule

Based on the comments received, we have made one substantive change to the proposed rule. As noted above, the proposed rule stated the Boone Big Boy TED was to be constructed of steel rod with a minimum outside diameter of ½ inch. Based on further evaluation, however, we decided that steel rod with a minimum outside diameter of ⅜ inch was acceptable for use in the construction of the Boone Big Boy TED.

Summary of Revisions to the TED Requirements

As a result of documented testing and evaluations, this rule authorizes: Using ¼ inch (0.63 cm) thick and 1½ inch (3.8 cm) deep flat bar, and rectangular and oval pipe meeting the current minimum dimensions cited at 50 CFR 223.207(a)(1) as construction materials in currently-approved TED grids; increasing maximum mesh size on escape flaps from 1⅝ to 2 inches (4.1 to 5.1 cm); including the Boone Big Boy TED for use in the shrimp fisheries; using three large TED and Boone Wedge Cut escape openings; using the Chauvin Shrimp Deflector in a top-opening TED configuration to improve shrimp retention; using a horizontal brace bar on a TED to increase the strength of the grid and prevent flexing of the vertical deflector bars; and using the modified founder TED in the summer founder fishery. This rule also corrects an error regarding the maximum size chain that can be used on the Parker TED escape opening flap.

Certifications

At the proposed rule stage for this action, the Chief Counsel for Regulation of the Department of Commerce certified to the Chief Counsel for Advocacy of the Small Business Administration that this rule would not have a significant economic impact on a substantial number of small entities. Therefore, a Final Regulatory Flexibility Analysis was not required. The factual basis leading to the certification is set forth below.

This rule would not impose any new requirements on fishing entities in the southeastern shrimp fisheries. An exact number of total fishing entities in the southeastern shrimp fisheries is unavailable, though approximately 5,000 vessels are estimated to be currently active. This rule simply allows fishermen, at their discretion, to use a alternative TEDs in their shrimp nets. NMFS expects fishermen will make these decisions only when they will result in improved fishing performance without a substantial increase in cost. As a result, any effects are expected to be positive and no adverse economic impacts are expected to accrue.

This final rule has been determined to be not significant for the purposes of Executive Order 12866.

The Endangered Species Act provides the statutory basis for the rule.

List of Subjects in 50 CFR Part 223

Endangered and threatened species; Exports; Imports; Transportation.

Dated: May 11, 2012.

Samuel D. Rauch III,

Acting Assistant Administrator for Fisheries, National Marine Fisheries Service.

For the reasons set out in the preamble, 50 CFR part 223 is amended as follows:

PART 223—THREATENED MARINE AND ANADROMOUS SPECIES.

■ 1. The authority citation for part 223 continues to read as follows:

Authority: 16 U.S.C. 1531–1543; subpart B, § 223.201–202 also issued under 16 U.S.C. 1361 *et seq.;* 16 U.S.C. 5503(d) for § 223.206(d)(9).

■ 2. In § 223.207:
■ a. Paragraph (a)(1)(i) introductory text is revised;
■ b. Paragraph (a)(1)(i)(C) is revised;
■ c. New paragraph (a)(1)(i)(D) is added;
■ d. Paragraphs (a)(7)(ii)(D) and (a)(7)(ii)(E) are added;
■ e. New paragraphs (b)(3) and (b)(4) are added;
■ f. Paragraph (c)(1)(iv)(B) is revised;
■ g. Paragraphs (d)(3) introductory text and (d)(3)(iii) are revised; and
■ h. Paragraphs (d)(3)(iv), (d)(8), and (d)(9) are added.

The revisions and additions read as follows:

§ 223.207 Approved TEDs.

* * * * *

(a) * * *

(1) * * *

(i) *Single-grid and inshore hooped hard TED.* A single-grid hard TED or an

inshore hooped hard TED must be constructed of one or a combination of the following materials, unless otherwise specifically restricted below, with minimum dimensions as follows:

* * * * *

(C) Steel or aluminum round, oval, or rectangular tubing with a minimum outside diameter or width of ½ inch (1.27 cm) and a minimum wall thickness of ⅛ inch (0.32 cm; also known as schedule 40 tubing).

(D) Steel or aluminum flat bar with dimensions no less than ¼ inch (0.64 cm) in thickness by 1½ inches (3.85 cm) in depth. For flat bar less than ⅜ inch (0.95 cm) in thickness, a horizontal brace bar to reinforce the deflector bars must be permanently attached to the frame and the rear face of each of the deflector bars within 4 inches (10.2 cm) of the midpoint of the TED frame. The horizontal brace bar must be constructed of approved material consistent with paragraph (a)(1)(i) of this section. The horizontal brace bar may be offset behind the deflector bars, using spacer bars, not to exceed 5 inches (12.7 cm) in length and constructed of the same size or larger flat bar as the deflector bars.

* * * * *

(7) * * *

(ii) * * *

(D) *Boone Wedge Cut opening.* (Figure 17 to this part). The escape opening is made by making two cuts in the TED extension; one cut is fore and aft (i.e., along the length of the extension) and the other cut is horizontal to the extension. The horizontal cut is 50 meshes long and begins at a point 4 inches (10.2 cm) inward from the outside edge of the grid on one side and runs to the same point on the opposite side of the grid. The fore and aft cut begins in the middle of the horizontal cut and runs forward 49.5 inches (125.7 cm) toward the front edge of the TED extension. The added wedge of webbing is attached along its two leading edges to the edges of the fore and aft cut. The webbing wedge is made of 1⅞ inch (4.8 cm) webbing and must have at least 41 meshes measuring at least 72 inches wide (182.9 cm) along its base (aft edge). The height of the wedge must measure at least 48.5 inches (123 cm). The top of the wedge is two bars across the leading edge then cut with a 1 point then 6 bar taper. A webbing flap, as described in paragraph (d)(3)(iv) of this section, may be used with this escape opening, so long as the minimum opening size is achieved.

(E) *Large TED openings.* (Figures 18a, 18b, and 18c to this part). Large TED escape openings may be utilized in the following configurations:

(*1*) A triangular cut (Figure 18a to this part), where the base of the triangle is defined by a straight-line measurement of the opening between the webbing attachment points on the TED frame that is no less than 40 inches (102 cm). The two side cuts of the triangle must be an all-bar taper from the point at which the webbing attaches to the TED frame to the apex of the triangle cut. Each side cut of the triangle must measure no less than 53 inches (135 cm). The sum of the straight-line base measurement and two side cuts must be no less than 147 inches (373 cm). The side cuts of the triangular opening may be reinforced using rib lines attached from the TED frame to the apex of the opening. A webbing flap, as described in either paragraph (d)(3)(ii) or (d)(3)(iii) of this section, may be used with this escape opening, so long as the minimum opening size is achieved.

(*2*) All-bar or all-points side cuts and a horizontal leading edge cut (Figures 18b and 18c to this part), where the straight-line measurement of the opening between the webbing attachment points on the TED frame may not be less than 40 inches (102 cm), and the two side cuts of the escape opening must not be less than 26 inches (66 cm) long from the points of the cut immediately forward of the TED frame. Only all-bar or all-points side cuts may be used; no combination tapers may be used when making the side cuts. The sum of the straight-line base measurement and the stretched measurements of the side cuts and leading edge cut must be no less than 147 inches (373 cm). A webbing flap, as described in either paragraph (d)(3)(ii) or (d)(3)(iii) of this section, may be used with this escape opening, so long as the minimum opening size is achieved.

* * * * *

(b) * * *

(3) *Boone Big Boy TED.* The Boone Big Boy TED is a single-grid hard TED with a minimum outside horizontal and vertical measurement of 36.5 inches (92.7 cm) and 48 inches (121.9 cm), respectively. The frame must be constructed of steel rod with a minimum outside diameter of ⅜ inch (0.95 cm). The deflector bars must be constructed of steel rod with a minimum outside diameter of ¼ inch (0.64 cm). The space between the deflector bars must not exceed 4 inches (10.2 cm). A horizontal brace bar constructed of at least ¼-inch (0.64-cm) steel rod must be permanently attached to the frame and the rear face of each of the deflector bars within 4 inches (10.2 cm) of the midpoint of the TED frame. The horizontal brace bar may be offset behind the deflector bars, using spacer bars, not to exceed 5 inches (12.7 cm) in length and must be constructed of the same size or larger material as the deflector bars. The Boone Big Boy TED must be used with the Boone Wedge Cut escape opening specified in (a)(7)(ii)(D) of this section. The angle of the deflector bars must be between 30° and 55° from the normal, horizontal flow through the interior of the trawl. The Boone Big Boy TED is exempt from the requirements of paragraph (a)(3)(ii) of this section, and may be installed at 55° when fishing in the Gulf SFSTCA or the Atlantic SFSTCA.

(4) *Modified flounder TED.* (Figure 11 to this part). The modified flounder TED is approved for use only in the Atlantic summer flounder bottom trawl fishery. The modified flounder TED is not an approved TED for use by shrimp trawlers. The modified flounder TED incorporates two separate grid frames that are attached together. The frames of the grids must be constructed of at least 1¼ inch (3.2 cm) outside diameter aluminum or steel pipe with a wall thickness of at least ⅛ inch (0.32 cm). Each of the two grids of the modified flounder TED must have outside dimensions of at least 36 inches (91.4 cm) in height and at least 48 inches (121.9 cm) in width. The upper grid is equipped with vertical deflector bars, which must be constructed of aluminum or steel flat bar with a minimum depth of 1¼ inches (3.2 cm) and a minimum thickness of ⅜ inch (0.95 cm). Vertical deflector bars must be connected to the top and bottom of the upper grid. The space between the deflector bars of the upper grid must not exceed 4 inches (10.2 cm). The lower grid is fabricated with both horizontal and vertical deflector bars, creating four narrow horizontal openings at the top, and three large rectangular openings along the bottom of the grid. The lower grid must have at least three horizontal deflector bars, constructed of aluminum or steel flat bar with a minimum depth of 1½ inches (3.8 cm) and a minimum thickness of ⅜ inch (0.95 cm), which are connected to each side of the grid and angled at 30° from the horizontal plane. Below this, a fourth horizontal deflector bar must be constructed of aluminum or steel pipe with a wall thickness of at least ⅛ inch (0.32 cm) and with a 1¼ inch (3.2 cm) outside diameter. These horizontal deflector bars must yield maximum spacings of 4½ inches (11.4 cm), 5½ inches (14.0 cm), 5½ inches (14.0 cm), and 4½ inches (11.4 cm), as constructed from

top to bottom and measured between the leading edges of adjacent deflector bars. There must be a maximum 10-inch (25.4 cm) space between the bottom-most horizontal deflector pipe bar and the grid frame bottom. Two additional vertical pipe sections running from the bottom of the grid frame to the bottom-most horizontal deflector pipe bar must divide the opening at the bottom into three rectangles, each with a maximum height of 10 inches (25.4 cm) and a maximum width of 14 inches (35.6 cm). This TED must comply with paragraph (a)(2) of this section. The upper and lower grids of this TED must be laced together with heavy twine no less than ¼ inch (0.64 cm) in diameter in order to maintain a consistent angle in both sections. There may be a gap between the two sections not to exceed 1 inch (2.54 cm). The angle of the entire TED frame must be between 30° and 45° from the normal, horizontal flow through the interior of the trawl. The entire width of the escape opening from the trawl must be centered on and immediately forward of the frame at the top of the net when the net is in its deployed position. The slope of the grids and the vertical deflector bars from forward to aft is upward. The modified flounder TED must use an escape opening consistent with paragraph (a)(7)(ii)(B), (C), (D), or (E) of this section. A webbing flap, as described in paragraphs (d)(3)(ii), (iii), or (iv) of this section, may be used with this escape opening, so long as the minimum opening size is achieved. This TED may not be configured with a bottom escape opening. Installation of an accelerator funnel is not permitted with this TED.

* * * * *

(c) * * *

(1) * * *

(iv) * * *

(B) *Offshore opening.* A horizontal cut extending from the attachment of one side of the deflector panel to the trawl to the attachment of the other side of the deflector panel to the trawl must be made in a single row of meshes across the top of the trawl and measure at least 96 inches (243.8 cm) in taut width. All trawl webbing above the deflector panel between the 96-inch (243.8-cm) cut and edges of the deflector panel must be removed. A rectangular flap of nylon webbing not larger than 2-inch (5.1-cm) stretched mesh may be sewn to the forward edge of the escape opening. The width of the flap must not be larger than the width of the forward edge of the escape opening. The flap must not extend more than 12 inches (30.5 cm) beyond the rear point of the escape opening. The sides of the flap may be attached to the top of the trawl but must not be attached farther aft than the row of meshes through the rear point of the escape opening. One row of steel chain not larger than ¼ inch (0.64 cm) may be sewn evenly to the back edge of the flap. The stretched length of the chain must not exceed 96 inches (244 cm). A Parker TED using the escape opening described in this paragraph meets the requirements of § 223.206(d)(2)(iv)(B). This opening or one that is larger must be used in all offshore waters and in the inshore waters of Georgia and South Carolina. It also may be used in other inshore waters.

* * * * *

(d) * * *

(3) *Webbing flap.* A webbing flap may be used to cover the escape opening under the following conditions: No device holds it closed or otherwise restricts the opening; it is constructed of webbing with a stretched mesh size no larger than 2 inches (5.1 cm); it lies on the outside of the trawl; it is attached along its entire forward edge forward of the escape opening; it is not attached on the sides beyond the row of meshes that lies 6 inches (15.2 cm) behind the posterior edge of the grid; the sides of the flap are sewn on the same row of meshes fore and aft; and the flap does not overlap the escape hole cut by more than 5 inches (12.7 cm) on either side.

* * * * *

(iii) *Double cover offshore TED flap.* This flap must be composed of two equal size rectangular panels of webbing. Each panel must be no less than 58 inches (147.3 cm) wide and may overlap each other no more than 15 inches (38.1 cm). The panels may only be sewn together along the leading edge of the cut. The trailing edge of each panel must not extend more than 24 inches (61 cm) past the posterior edge of the grid (Figure 16 to this part). Each panel may be sewn down the entire length of the outside edge of each panel. Paragraph (d)(3) of this section notwithstanding, this flap may be installed on either the outside or inside of the TED extension. For interior installation, the flap may be sewn to the interior of the TED extension along the leading edge and sides to a point intersecting the TED frame; however, the flap must be sewn to the exterior of the TED extension from the point at which it intersects the TED frame to the trailing edge of the flap. Chafing webbing described in paragraph (d)(4) of this section may not be used with this type of flap.

(iv) *Boone Wedge Cut opening flap.* (Figure 17 to this part). This escape opening flap is attached to the trailing edge of the horizontal cut and the wedge. The flap is made from a piece of 1⅞ inch (4.8 cm) webbing that is trapezoid in shape. The leading edge must be at least 94 meshes wide, stretching to at least 164.5 inches (417.8 cm). The trailing edge is at least 87 meshes wide and at least 152 inches (386.1 cm). The two sides are at least 8 meshes long and at least 15 inches (38.1 cm). The escape opening flap is attached only to the leading edge of the escape opening cut and is not attached along its sides.

* * * * *

(8) *Chauvin shrimp deflector.* (Figures 19a and 19b to this part). The Chauvin shrimp deflector may be used on any approved TED design, but its installation must not reduce the minimum stretched measurements of the TED opening. The Chauvin shrimp deflector may not be installed with a bottom escape opening. The Chauvin shrimp deflector is constructed from a single piece of 3-inch (7.6-cm) inside diameter PVC pipe which measures 30 inches (76.2 cm) in length; the ends of the PVC pipe are left uncapped. A webbing or mesh bag is made and is used to encase the PVC pipe (Figure 19a to this part). The mesh bag is created using a single piece of 1⅝ inch (4.1 cm) stretched-mesh webbing made of nylon or polyethylene with dimensions 57 meshes wide by 10 meshes deep. The leading edge of the 57-mesh piece of webbing is attached around the PVC pipe and back to the row of meshes located 7 meshes down the 10-mesh length. The ends of the webbing are sewn together on each end forming a webbing bag to assure the PVC pipe remains encased in the webbing. This leaves a 3-mesh tail hanging from the encased PVC pipe. The 3-mesh tail of the encased PVC pipe is then sewn to a single row of meshes on the inside of the trawl along the 57-mesh edge, 3 meshes ahead of the forward cut of the TED escape opening. This would allow a 3-mesh overlap to the left and right of the forward cut (Figure 19b to this part).

(9) *Brace bar.* (Figure 14a to this part). A horizontal brace bar may be added to a TED if it is constructed of aluminum or steel rod or tubing specified in 50 CFR 223.207(a)(1)(i)(A)–(C) and it is permanently attached to the frame and the rear face of each of the deflector bars within 4 inches (10.2 cm) of the midpoint of the TED frame. The horizontal brace bar may be offset behind the deflector bars, using spacer bars, not to exceed 5 inches (12.7 cm) in length and must be constructed of the

same size or larger material as the deflector bars.

* * * * *

3. Add Figure 11 to Part 223 to read as follows:

BILLING CODE 3510–22–P

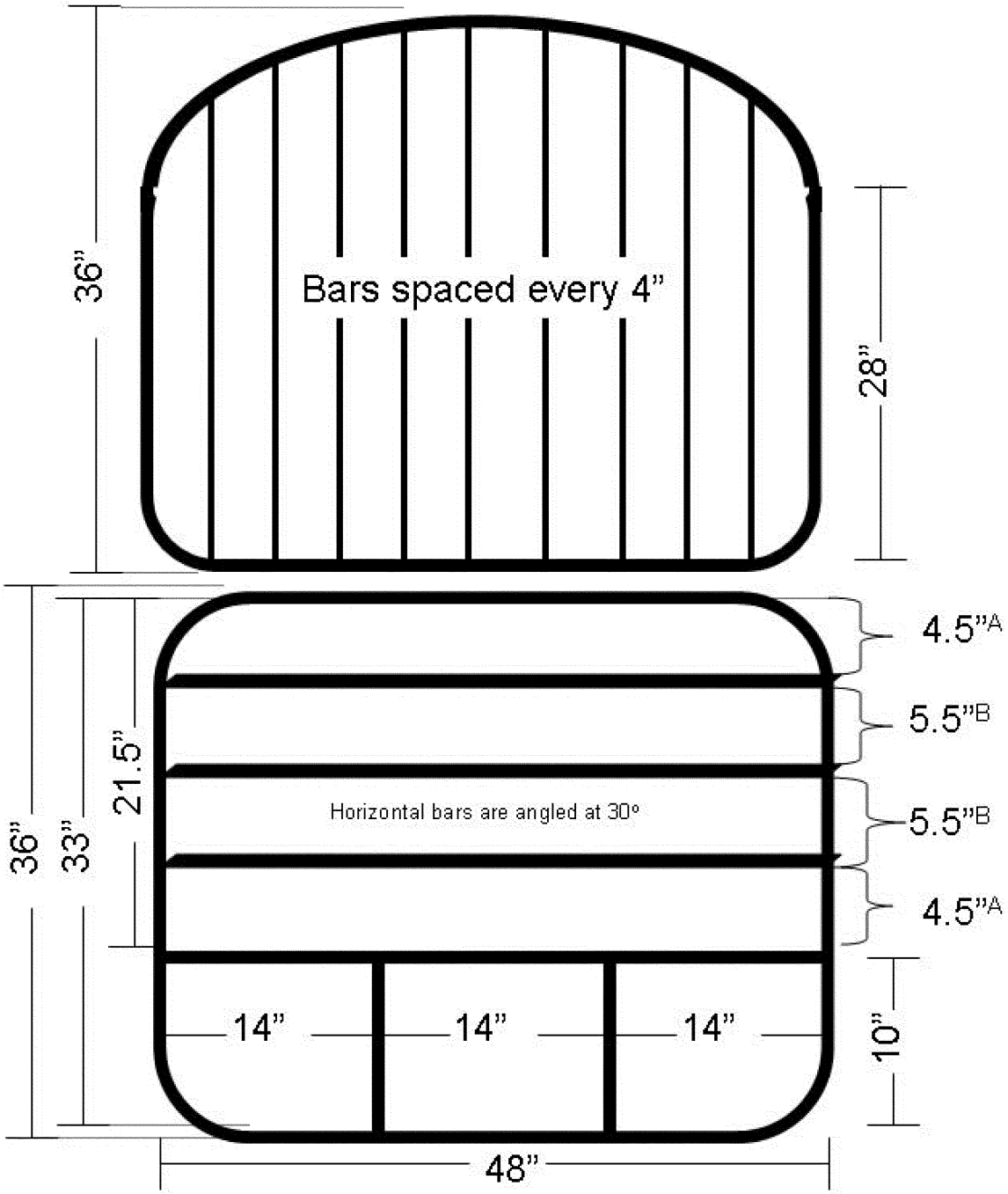

All pipe must be a minimum of 1.25" O.D.; horizontal flat bars shall be a minimum of 1.5" x 0.375"; vertical flat bars shall be a minimum of 1.25" x 0.375"

A – Space between edge of round bar and the leading edge of the adjacent bar is 4.5"

B – Space between leading edge of one bar and the leading edge of the adjacent bar is 5.5"

FIGURE 11 TO PART 223 -- MODIFIED FLOUNDER TED

■ 4. Add Figure 17 to Part 223 to read as follows:

Escape Opening Cut Dimensions

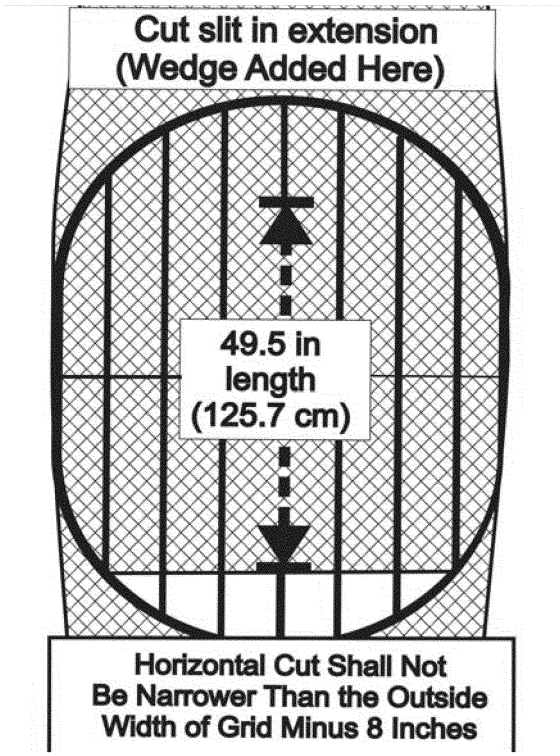

Webbing Wedge Dimensions

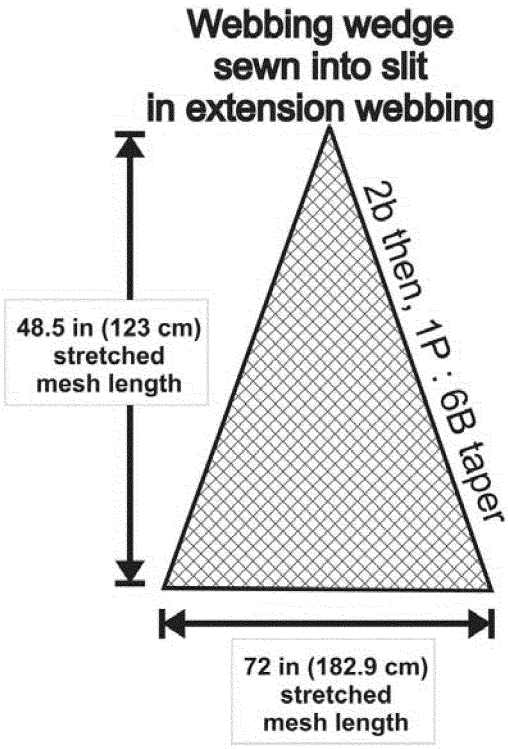

Escape Opening Flap Dimensions

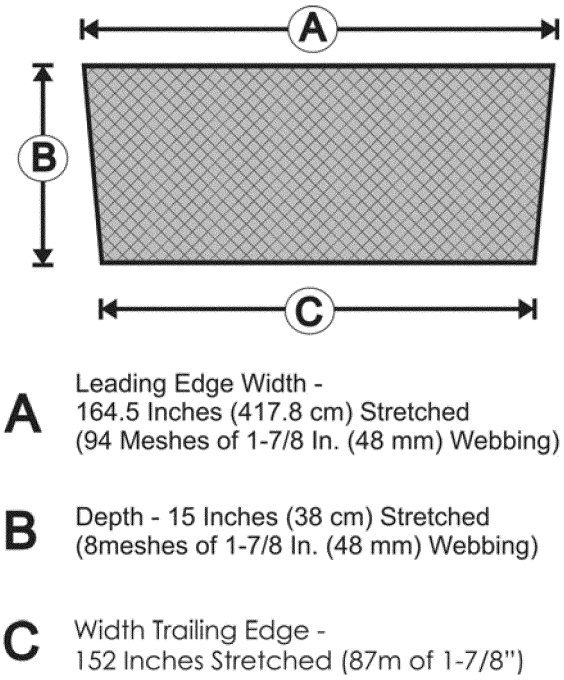

Escape Opening Flap Attachment

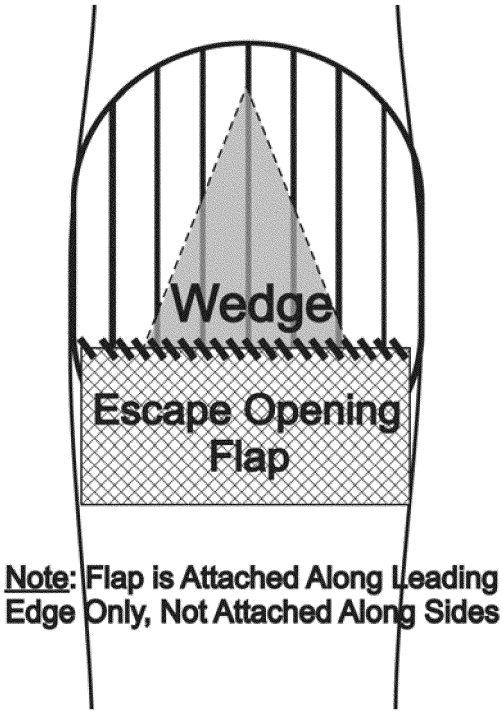

FIGURE 17 TO PART 223 -- BOONE WEDGE CUT ESCAPE OPENING

■ 5. Add Figures 18a, 18b, and 18c to Part 223 to read as follows:

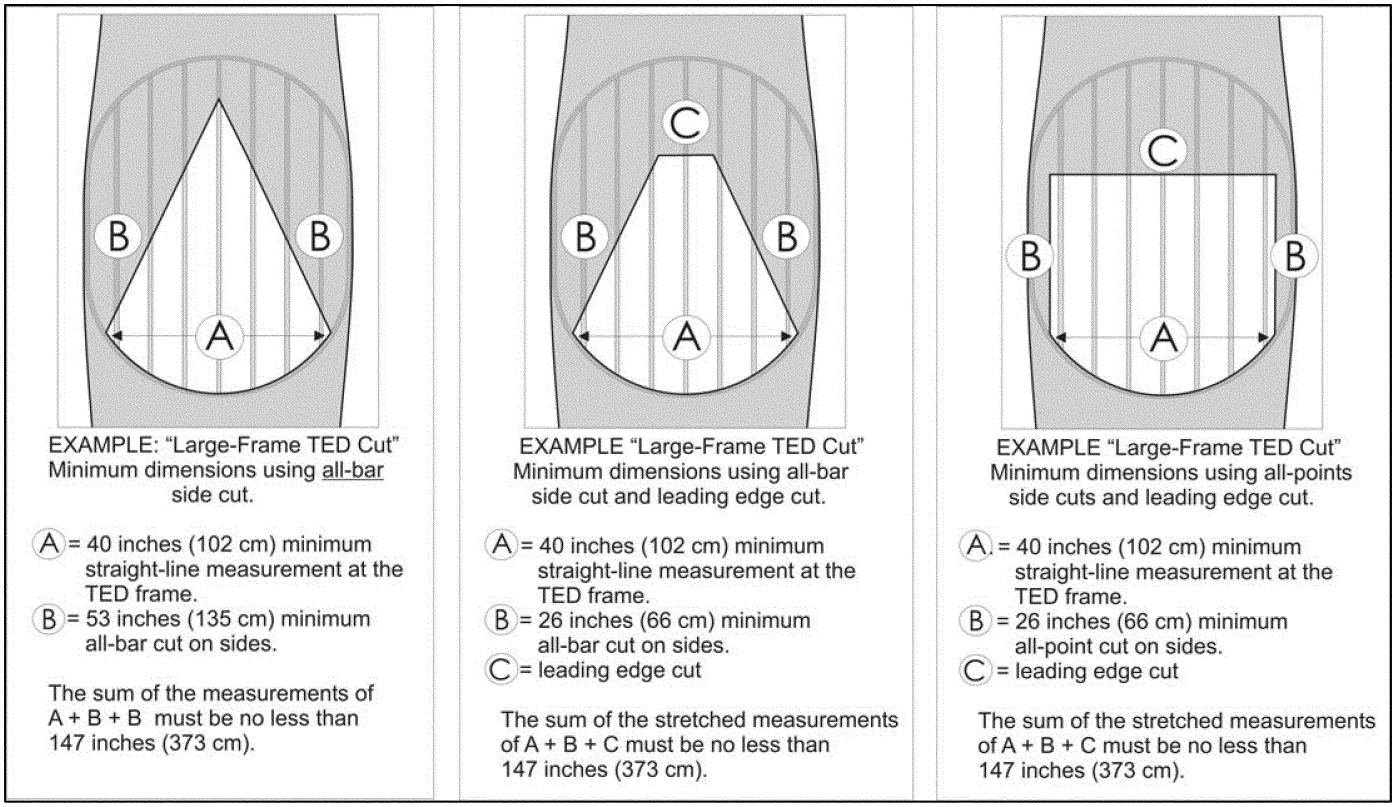

FIGURES 18a, 18b, AND 18c TO PART 223. LARGE FRAME TED ESCAPE OPENING: MINIMUM DIMENSIONS USING ALL-BAR CUTS (TRIANGULAR CUT); LARGE FRAME TED ESCAPE OPENING: MINIMUM DIMENSIONS USING ALL-BAR CUTS AND LEADING EDGE CUT; LARGE FRAME TED ESCAPE OPENING: MINIMUM DIMENSIONS USING ALL-POINTS SIDE CUT (RECTANGULAR CUT)

■ 6. Add Figures 19a and 19b to Part 223 to read as follows:

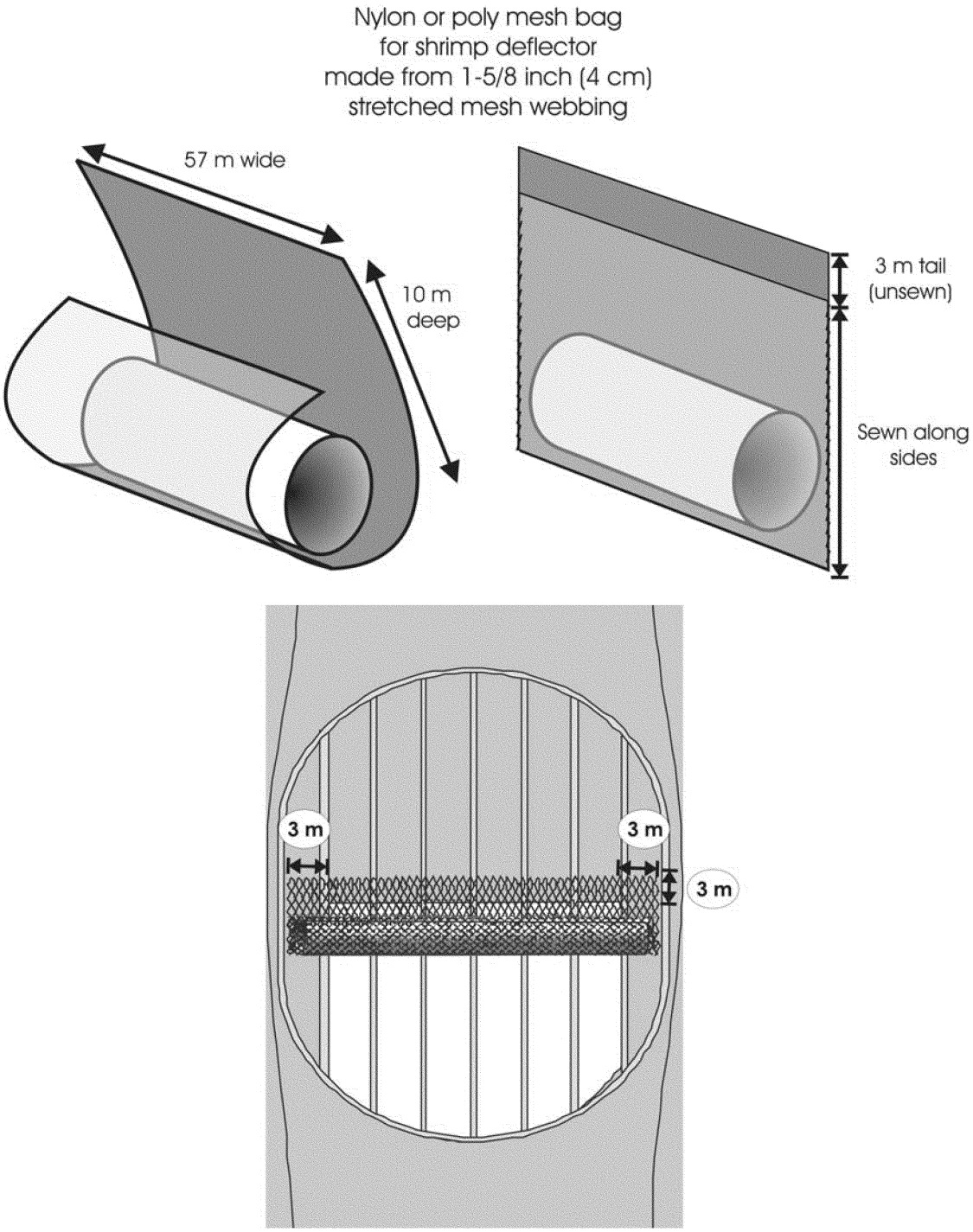

FIGURES 19a AND 19b TO PART 223. CHAUVIN SHRIMP DEFLECTOR INSTALLATION DETAILS

[FR Doc. 2012–12014 Filed 5–18–12; 8:45 am]
BILLING CODE 3510–22–C