AUTHENTICATED
U.S. GOVERNMENT
INFORMATION
GPO

FEDERAL REGISTER

Vol. 77 Monday,
No. 117 June 18, 2012

Pages 36115–36386

OFFICE OF THE FEDERAL REGISTER

The **FEDERAL REGISTER** (ISSN 0097–6326) is published daily, Monday through Friday, except official holidays, by the Office of the Federal Register, National Archives and Records Administration, Washington, DC 20408, under the Federal Register Act (44 U.S.C. Ch. 15) and the regulations of the Administrative Committee of the Federal Register (1 CFR Ch. I). The Superintendent of Documents, U.S. Government Printing Office, Washington, DC 20402 is the exclusive distributor of the official edition. Periodicals postage is paid at Washington, DC.

The **FEDERAL REGISTER** provides a uniform system for making available to the public regulations and legal notices issued by Federal agencies. These include Presidential proclamations and Executive Orders, Federal agency documents having general applicability and legal effect, documents required to be published by act of Congress, and other Federal agency documents of public interest.

Documents are on file for public inspection in the Office of the Federal Register the day before they are published, unless the issuing agency requests earlier filing. For a list of documents currently on file for public inspection, see *www.ofr.gov.*

The seal of the National Archives and Records Administration authenticates the Federal Register as the official serial publication established under the Federal Register Act. Under 44 U.S.C. 1507, the contents of the **Federal Register** shall be judicially noticed.

The **Federal Register** is published in paper and on 24x microfiche. It is also available online at no charge at *www.fdsys.gov*, a service of the U.S. Government Printing Office.

The online edition of the **Federal Register** is issued under the authority of the Administrative Committee of the Federal Register as the official legal equivalent of the paper and microfiche editions (44 U.S.C. 4101 and 1 CFR 5.10). It is updated by 6:00 a.m. each day the **Federal Register** is published and includes both text and graphics from Volume 59, 1 (January 2, 1994) forward. For more information, contact the GPO Customer Contact Center, U.S. Government Printing Office. Phone 202-512-1800 or 866-512-1800 (toll free). E-mail, *gpo@custhelp.com.*

The annual subscription price for the **Federal Register** paper edition is $749 plus postage, or $808, plus postage, for a combined **Federal Register, Federal Register** Index and List of CFR Sections Affected (LSA) subscription; the microfiche edition of the **Federal Register** including the **Federal Register** Index and LSA is $165, plus postage. Six month subscriptions are available for one-half the annual rate. The prevailing postal rates will be applied to orders according to the delivery method requested. The price of a single copy of the daily **Federal Register,** including postage, is based on the number of pages: $11 for an issue containing less than 200 pages; $22 for an issue containing 200 to 400 pages; and $33 for an issue containing more than 400 pages. Single issues of the microfiche edition may be purchased for $3 per copy, including postage. Remit check or money order, made payable to the Superintendent of Documents, or charge to your GPO Deposit Account, VISA, MasterCard, American Express, or Discover. Mail to: U.S. Government Printing Office—New Orders, P.O. Box 979050, St. Louis, MO 63197-9000; or call toll free 1-866-512-1800, DC area 202-512-1800; or go to the U.S. Government Online Bookstore site, see *bookstore.gpo.gov.*

There are no restrictions on the republication of material appearing in the **Federal Register.**

How To Cite This Publication: Use the volume number and the page number. Example: 77 FR 12345.

Postmaster: Send address changes to the Superintendent of Documents, Federal Register, U.S. Government Printing Office, Washington, DC 20402, along with the entire mailing label from the last issue received.

SUBSCRIPTIONS AND COPIES

PUBLIC

Subscriptions:

Paper or fiche	**202–512–1800**
Assistance with public subscriptions	**202–512–1806**

General online information **202–512–1530; 1–888–293–6498**

Single copies/back copies:

Paper or fiche	**202–512–1800**
Assistance with public single copies	**1–866–512–1800 (Toll-Free)**

FEDERAL AGENCIES

Subscriptions:

Paper or fiche	**202–741–6005**
Assistance with Federal agency subscriptions	**202–741–6005**

FEDERAL REGISTER WORKSHOP

THE FEDERAL REGISTER: WHAT IT IS AND HOW TO USE IT

FOR: Any person who uses the Federal Register and Code of Federal Regulations.

WHO: Sponsored by the Office of the Federal Register.

WHAT: Free public briefings (approximately 3 hours) to present:

1. The regulatory process, with a focus on the Federal Register system and the public's role in the development of regulations.
2. The relationship between the Federal Register and Code of Federal Regulations.
3. The important elements of typical Federal Register documents.
4. An introduction to the finding aids of the FR/CFR system.

WHY: To provide the public with access to information necessary to research Federal agency regulations which directly affect them. There will be no discussion of specific agency regulations.

WHEN: Tuesday, July 10, 2012
9 a.m.–12:30 p.m.

WHERE: Office of the Federal Register
Conference Room, Suite 700
800 North Capitol Street, NW.
Washington, DC 20002

RESERVATIONS: (202) 741–6008

Printed on recycled paper.

Contents

Federal Register

Vol. 77, No. 117

Monday, June 18, 2012

Agency for Healthcare Research and Quality
NOTICES
Meetings:
Scientific Peer Review Groups, 36275–36276

Agricultural Marketing Service
RULES
Final Free and Restricted Percentages for the 2011–12 Crop Year for Tart Cherries:
Tart Cherries Grown in the States of Michigan, et al., 36115–36119
Marketing Orders:
Pistachios Grown in California, Arizona, and New Mexico, 36119–36123

Agriculture Department
See Agricultural Marketing Service
See Farm Service Agency
See Forest Service

Antitrust Division
NOTICES
National Cooperative Research and Production Act:
Border Security Technology Consortium, 36292
Cooperative Research Group on Particle Sensor Performance and Durability, 36292

Antitrust
See Antitrust Division

Architectural and Transportation Barriers Compliance Board
PROPOSED RULES
Americans with Disabilities Act and Architectural Barriers Act Accessibility Guidelines:
Emergency Transportable Housing Units, 36231–36247

Children and Families Administration
NOTICES
Agency Information Collection Activities; Proposals, Submissions, and Approvals, 36276–36277

Commerce Department
See International Trade Administration
See National Oceanic and Atmospheric Administration

Corporation for National and Community Service
NOTICES
Agency Information Collection Activities; Proposals, Submissions, and Approvals, 36261–36263

Education Department
NOTICES
Agency Information Collection Activities; Proposals, Submissions, and Approvals:
Higher Education Opportunity Act Title II Reporting Forms on Teacher Quality and Preparation, 36263–36264
Applications for New Awards:
Personnel Development to Improve Services and Results for Children with Disabilities, Early Childhood Personnel Center, 36264–36271

Energy Department
NOTICES
Meetings:
International Energy Agency, 36271–36272
SunShot Prize; America's Most Affordable Rooftop, 36272

Environmental Protection Agency
RULES
Determination of Failure to Attain the One-Hour Ozone Standard by 2007, etc.:
1997 Eight-Hour Ozone Standards for the New York–Northern New Jersey–Long Island Nonattainment Area, 36163–36170
Emission Standards and Test Procedures:
Control of Air Pollution From Aircraft and Aircraft Engines, 36342–36386
TSCA Inventory Update Reporting Modifications:
Chemical Data Reporting; 2012 Submission Period Extension, 36170–36172
PROPOSED RULES
National Uniform Emission Standards for Storage Vessel and Transfer Operations, Equipment Leaks, and Closed Vent Systems, etc., 36248–36249
NOTICES
Meetings:
Chartered Science Advisory Board and Chartered Board of Scientific Counselors, 36273–36274
Draft Permitting Guidance for Oil and Gas Hydraulic Fracturing Activities Using Diesel Fuels, 36273
Public Water System Supervision Program Revision for Alabama, 36274–36275

Farm Service Agency
NOTICES
Agency Information Collection Activities; Proposals, Submissions, and Approvals:
Request for Aerial Photography, 36250

Federal Aviation Administration
RULES
Airworthiness Directives:
AGUSTA S.p.A. Helicopters, 36137–36139
Airbus Airplanes, 36146–36149
BAE SYSTEMS (Operations) Limited Airplanes, 36127–36129
Bombardier, Inc. Airplanes, 36129–36131
Enstrom Helicopter Corporation Helicopters, 36131–36134
SOCATA Airplanes, 36125–36127
The Boeing Co. Airplanes, 36134–36137, 36139–36146
Special Conditions:
Gulfstream Aerospace LP (GALP), Model Gulfstream G280 airplane; Aircraft Electronic System Security Protection from Unauthorized External Access, 36123–36125
PROPOSED RULES
Airworthiness Directives:
Airbus Airplanes, 36209–36213
Empresa Brasileira de Aeronautica S.A. (EMBRAER) Airplanes, 36224–36226
Eurocopter France Helicopters, 36213–36222
The Boeing Co. Airplanes, 36206–36209, 36222–36224

NOTICES
Agency Information Collection Activities; Proposals, Submissions, and Approvals:
Pilot Schools, 36330
Specific Release Form, 36330–36331
Meetings:
RTCA Special Committee 213, Enhanced Flight Vision Systems/Synthetic Vision Systems, 36331
Noise Exposure Maps:
Cleveland Hopkins International Airport, Cleveland, OH, 36331–36332
Petitions for Exemptions; Summaries of Petitions Received, 36333

Federal Bureau of Investigation
NOTICES
Agency Information Collection Activities; Proposals, Submissions, and Approvals:
Customer Satisfaction Assessment, 36293
FBI National Academy Level III Evaluation, 36292–36293

Federal Communications Commission
RULES
Carriage of Digital Television Broadcast Signals, 36178–36192
National Environmental Policy Act Compliance for Proposed Tower Registrations:
Effects of Communications Towers on Migratory Birds, 36177–36178

Federal Deposit Insurance Corporation
PROPOSED RULES
Definition of Predominantly Engaged in Activities that Are Financial in Nature or Incidental Thereto, 36194–36206
NOTICES
Agency Information Collection Activities; Proposals, Submissions, and Approvals, 36275

Federal Election Commission
NOTICES
Meetings; Sunshine Act, 36275

Federal Emergency Management Agency
RULES
Suspension of Community Eligibility, 36172–36177

Federal Motor Carrier Safety Administration
NOTICES
Qualification of Drivers; Exemption Applications; Diabetes Mellitus, 36333–36336
Qualification of Drivers; Exemption Applications; Vision, 36336–36339

Federal Trade Commission
RULES
Disclosure Requirements and Prohibitions Concerning Franchising, 36149–36150

Fish and Wildlife Service
NOTICES
Permit Amendment Applications:
Incidental Take Permit for Multiple Species Conservation Program, County of San Diego Subarea Plan, County of San Diego, CA, 36287
Proposed Low-Effect Habitat Conservation Plan for the California Tiger Salamander:
Calaveras County, CA, 36287–36289

Food and Drug Administration
NOTICES
Academic Development of a Training Program for Good Laboratory Practices in High Containment Environments, 36277–36279
Agency Information Collection Activities; Proposals, Submissions, and Approvals:
Biosimilars User Fee Cover Sheet, 36279–36281

Forest Service
NOTICES
Calls for Nominations:
Pacific Northwest Recreation Resource Advisory Committee, 36250–36251
Intermountain Region, Boise National Forest:
Emmet Ranger District, Idaho; Scriver Creek Integrated Restoration Project, 36251–36253

Health and Human Services Department
See Agency for Healthcare Research and Quality
See Children and Families Administration
See Food and Drug Administration
See Inspector General Office, Health and Human Services Department
See National Institutes of Health

Healthcare Research and Quality Agency
See Agency for Healthcare Research and Quality

Homeland Security Department
See Federal Emergency Management Agency
See U.S. Citizenship and Immigration Services

Housing and Urban Development Department
NOTICES
Agency Information Collection Activities; Proposals, Submissions, and Approvals:
Application for Fee or Roster Personnel (Appraisers and Inspectors) Designation and Appraisal Report Forms, 36285–36286
Previous Participation Certification, 36286

Indian Affairs Bureau
PROPOSED RULES
Intent to Establish an Osage Negotiated Rulemaking Committee, 36226–36228
NOTICES
Tribal Consultations:
Implementation of Indian Reservation Roads Program, etc.; Correction, 36289–36290

Inspector General Office, Health and Human Services Department
NOTICES
Solicitation of Information and Recommendations for Revising OIGs Provider Self-Disclosure Protocol, 36281–36282

Interior Department
See Fish and Wildlife Service
See Indian Affairs Bureau
See Land Management Bureau

Internal Revenue Service
RULES
Portability of a Deceased Spousal Unused Exclusion Amount, 36150–36163

PROPOSED RULES
Financial Asset Securitization Investment Trusts, 36228
Portability of a Deceased Spousal Unused Exclusion Amount, 36229–36231
Property Transferred in Connection with Performance of Services under Section 83, 36229

International Trade Administration
NOTICES
Antidumping Duty Administrative Reviews; Results, Extensions, Amendments, etc.:
Fresh Garlic from People's Republic of China; Court Decision Not in Harmony with Final Results, 36255–36256
Honey from Argentina, 36253–36255
Antidumping Duty Investigations; Results, Extensions, Amendments, etc.:
Circular Welded Carbon-Quality Steel Pipe from India; Postponement of Final Determination, 36256–36257
Implementations of Determination under Section 129 of Uruguay Round Agreements Act:
Stainless Steel Plate in Coils from Belgium, Steel Concrete Reinforcing Bars from Latvia, et al., 36257–36260

International Trade Commission
NOTICES
Investigations; Determinations, Rulings, Amendments, etc.:
Certain Communication Equipment, Components Thereof, and Products Containing the Same, etc., 36291–36292

Justice Department
See Antitrust Division
See Federal Bureau of Investigation
See Justice Programs Office

Justice Programs Office
NOTICES
Agency Information Collection Activities; Proposals, Submissions, and Approvals:
Accounting System and Financial Capability Questionnaire, 36294
Community Partnership Grants Management System, 36294–36295

Labor Department
See Labor Statistics Bureau
NOTICES
Agency Information Collection Activities; Proposals, Submissions, and Approvals:
Cadmium in Construction Standard, 36296
Cadmium in General Industry Standard, 36295

Labor Statistics Bureau
NOTICES
Agency Information Collection Activities; Proposals, Submissions, and Approvals, 36296–36297

Land Management Bureau
NOTICES
Agency Information Collection Activities; Proposals, Submissions, and Approvals; Renewal, 36290–36291
Filings of Plats of Surveys:
Colorado, 36291

Maritime Administration
NOTICES
Agency Information Collection Activities; Proposals, Submissions, and Approvals:
Reports, Forms and Recordkeeping Requirements, 36339–36340

National Archives and Records Administration
NOTICES
Agency Information Collection Activities; Proposals, Submissions, and Approvals, 36297–36298

National Credit Union Administration
NOTICES
Meetings; Sunshine Act, 36298

National Institutes of Health
NOTICES
Government-Owned Inventions; Availability for Licensing, 36282–36284

National Oceanic and Atmospheric Administration
RULES
Fisheries Off West Coast States:
Coastal Pelagic Species Fisheries; Annual Specifications, 36192–36193
NOTICES
Agency Information Collection Activities; Proposals, Submissions, and Approvals:
Puget Sound Recreational Shellfish Harvesting Project, 36260–36261
Socioeconomic Assessment of Gulf of Mexico Fisheries under the Grouper–Tilefish Individual Fishing Quota Program, 36261

Nuclear Regulatory Commission
NOTICES
Confirmatory Orders Modifying Licenses:
Connecticut Yankee Atomic Power Co., Haddam Neck Plant, 36300–36302
Maine Yankee Atomic Power Co., Maine Yankee Atomic Power Station, 36298–36300
Yankee Atomic Electric Co., Yankee Nuclear Power Station, 36302–36305

Securities and Exchange Commission
NOTICES
Orders of Suspension of Trading:
Stream Communications Network & Media, Inc., 36305
Self-Regulatory Organizations; Proposed Rule Changes:
NASDAQ OMX PHLX LLC, 36310–36314
New York Stock Exchange LLC, 36321–36324
NYSE Arca, Inc., 36305–36310, 36314–36321
NYSE MKT LLC, 36324–36327

Special Counsel Office
NOTICES
Agency Information Collection Activities; Proposals, Submissions, and Approvals, 36328–36329

State Department
NOTICES
Culturally Significant Objects Imported for Exhibition Determinations:
Dead Sea Scrolls and The Bible Ancient Artifacts – Timeless Treasures, 36329
Environmental Impact Statements; Availability, etc., 36329–36330

Transportation Department
See Federal Aviation Administration
See Federal Motor Carrier Safety Administration
See Maritime Administration

Treasury Department
See Internal Revenue Service

U.S. Citizenship and Immigration Services
NOTICES
Agency Information Collection Activities; Proposals, Submissions, and Approvals, 36285

Separate Parts In This Issue

Part II
Environmental Protection Agency, 36342–36386

Reader Aids

Consult the Reader Aids section at the end of this page for phone numbers, online resources, finding aids, reminders, and notice of recently enacted public laws.

To subscribe to the Federal Register Table of Contents LISTSERV electronic mailing list, go to http://listserv.access.gpo.gov and select Online mailing list archives, FEDREGTOC-L, Join or leave the list (or change settings); then follow the instructions.

CFR PARTS AFFECTED IN THIS ISSUE

A cumulative list of the parts affected this month can be found in the Reader Aids section at the end of this issue.

7 CFR
930 36115
983 36119

12 CFR
Proposed Rules:
380 36194

14 CFR
25 36123
39 (9 documents) 36125, 36127, 36129, 36131, 36134, 36137, 36139, 36143, 36146
Proposed Rules:
39 (8 documents) 36206, 36209, 36211, 36213, 36216, 36220, 36222, 36224

16 CFR
436 36149

25 CFR
Proposed Rules:
226 36226

26 CFR
20 36150
25 36150
602 36150
Proposed Rules:
1 (2 documents) 36228, 36229
20 36229
25 36229

36 CFR
Proposed Rules:
1191 36231

40 CFR
52 36163
87 36342
711 36170
1068 36342
Proposed Rules:
65 36248

44 CFR
64 36172

47 CFR
1 36177
17 36177
22 36177
24 36177
25 36177
27 36177
76 36178
80 36177
87 36177
90 36177

50 CFR
660 36192

Rules and Regulations

Federal Register
Vol. 77, No. 117
Monday, June 18, 2012

This section of the FEDERAL REGISTER contains regulatory documents having general applicability and legal effect, most of which are keyed to and codified in the Code of Federal Regulations, which is published under 50 titles pursuant to 44 U.S.C. 1510.

The Code of Federal Regulations is sold by the Superintendent of Documents. Prices of new books are listed in the first FEDERAL REGISTER issue of each week.

DEPARTMENT OF AGRICULTURE

Agricultural Marketing Service

7 CFR Part 930

[Doc. No. AMS–FV–11–0085; FV11–930–3 FR]

Tart Cherries Grown in the States of Michigan, et al.; Final Free and Restricted Percentages for the 2011–12 Crop Year for Tart Cherries

AGENCY: Agricultural Marketing Service, USDA.

ACTION: Final rule.

SUMMARY: This rule establishes final free and restricted percentages for the 2011–12 crop year under the marketing order for tart cherries grown in the states of Michigan, New York, Pennsylvania, Oregon, Utah, Washington, and Wisconsin (order). The order is administered locally by the Cherry Industry Administrative Board (Board). This action establishes the proportion of tart cherries from the 2011 crop which may be handled in commercial outlets at 88 percent free and 12 percent restricted. These percentages should stabilize marketing conditions by adjusting supply to meet market demand and help improve grower returns.

DATES: *Effective Date:* June 19, 2012.

FOR FURTHER INFORMATION CONTACT: Jennie M. Varela, Marketing Specialist, or Christian D. Nissen, Regional Manager, Southeast Marketing Field Office, Marketing Order and Agreement Division, Fruit and Vegetable Program, AMS, USDA; Telephone: (863) 324–3375, Fax: (863) 325–8793, or Email: *Jennie.Varela@ams.usda.gov* or *Christian.Nissen@ams.usda.gov.*

Small businesses may request information on complying with this regulation by contacting Laurel May, Marketing Order and Agreement Division, Fruit and Vegetable Program, AMS, USDA, 1400 Independence Avenue SW., STOP 0237, Washington, DC 20250–0237; Telephone: (202) 720–2491, Fax: (202) 720–8938, or Email: *Laurel.May@ams.usda.gov.*

SUPPLEMENTARY INFORMATION: This final rule is issued under Marketing Agreement and Order No. 930, both as amended (7 CFR part 930), regulating the handling of tart cherries produced in the States of Michigan, New York, Pennsylvania, Oregon, Utah, Washington and Wisconsin, hereinafter referred to as the ''order.'' The order is effective under the Agricultural Marketing Agreement Act of 1937, as amended (7 U.S.C. 601–674), hereinafter referred to as the ''Act.''

The Department of Agriculture (USDA) is issuing this rule in conformance with Executive Order 12866.

This final rule has been reviewed under Executive Order 12988, Civil Justice Reform. Under the order provisions now in effect, final free and restricted percentages may be established for tart cherries handled during the crop year. This final rule establishes final free and restricted percentages for tart cherries for the 2011–12 crop year, beginning July 1, 2011, through June 30, 2012.

The Act provides that administrative proceedings must be exhausted before parties may file suit in court. Under section 608c(15)(A) of the Act, any handler subject to an order may file with USDA a petition stating that the order, any provision of the order, or any obligation imposed in connection with the order is not in accordance with law and request a modification of the order or to be exempted therefrom. A handler is afforded the opportunity for a hearing on the petition. After the hearing, USDA would rule on the petition. The Act provides that the district court of the United States in any district in which the handler is an inhabitant, or has his or her principal place of business, has jurisdiction to review USDA's ruling on the petition, provided an action is filed not later than 20 days after the date of the entry of the ruling.

This final rule establishes the final free and restricted percentages for the 2011–12 crop year. This action establishes the proportion of tart cherries from the 2011 crop which may be handled in commercial outlets at 88 percent free and 12 percent restricted. These percentages should stabilize marketing conditions by adjusting supply to meet market demand and help improve grower returns. The action was recommended by the Board at a meeting on September 15, 2011.

Section 930.51(a) of the order provides authority to regulate volume by designating free and restricted percentages for any tart cherries acquired by handlers in a given crop year. Section 930.50 prescribes procedures for computing an optimum supply based on sales history and for calculating these free and restricted percentages. Free percentage volume may be shipped to any market, while restricted percentage volume must be held by handlers in a primary or secondary reserve, or be diverted or used for exempt purposes as prescribed in §§ 930.159 and 930.162 of the regulations. These activities include, in part, the development of new products, sales into new markets, the development of export markets, and charitable contributions.

Under § 930.52, only those districts with an annual average production of at least six million pounds are subject to regulation and any district producing a crop which is less than 50 percent of its annual average is exempt. The regulated districts for the 2011–2012 crop year are: District 1—Northern Michigan; District 2—Central Michigan; District 3—Southern Michigan; District 4—New York; District 7—Utah; and District 8—Washington. Districts 5, 6, and 9 (Oregon, Pennsylvania, and Wisconsin, respectively) are not regulated for the 2011–12 season.

Demand for tart cherries and tart cherry products tends to be relatively stable from year to year. Conversely, annual tart cherry production can vary greatly. In addition, tart cherries are processed and can be stored and carried over from crop year to crop year, further impacting supply. As a result, supply and demand for tart cherries are rarely in balance.

Because demand for tart cherries is inelastic, total sales volume is not very responsive to changes in price. However, prices are very sensitive to changes in supply. As such, an oversupply of cherries would have a sharp negative effect on prices, driving down grower returns. The Board, aware of this economic relationship, focuses

on using the volume control provisions in the order to balance supply and demand to stabilize industry returns.

Pursuant to § 930.50 of the order, the Board meets on or about July 1 to review sales data, inventory data, current crop forecasts and market conditions for the upcoming season and, if necessary, to recommend preliminary free and restricted percentages if anticipated supply would exceed demand. After harvest is complete, but no later than September 15, the Board meets again to update their calculations using actual production data, consider any necessary adjustments to the preliminary percentages, and determine if final free and restricted percentages should be recommended to the Secretary.

To assist in this process, the Board uses an optimum supply formula (OSF), a series of mathematical calculations using sales history, inventory, and production data to determine whether there is a surplus, and if so, how much volume should be restricted to maintain optimum supply. The optimum supply represents the desirable volume of tart cherries that should be available for sale in the coming crop year. Optimum supply is defined as the average free sales of the prior three years plus desirable carry-out inventory. Desirable carry-out is the amount of fruit needed by the industry to be carried into the succeeding crop year to meet marketing demand until the new crop is available. Desirable carry-out is set by the Board after considering market circumstances and needs. This figure can range from zero to a maximum of 20 million pounds.

To determine whether the industry would be in an oversupply situation for the coming year, the Board compares the optimum supply figure and the total anticipated supply for the coming year. Anticipated supply includes any inventory available at the beginning of the season (carry-in) and the current year's estimated production. The carry-in figure is subtracted from the optimum supply to determine the volume of cherries that would need to be produced in the current year to provide what is needed to meet the optimum supply. If estimated production is less than the optimum supply minus carry-in, the Board is required to establish a free percentage of 100 percent and a restricted percentage of zero. If production is greater than the optimum supply minus carry-in, the difference is considered surplus. To calculate the restricted percentage, this surplus tonnage is divided by the sum of production in the regulated districts.

The Board met on June 23, 2011, and computed an optimum supply of 174 million pounds for the 2011–12 crop year, using the free sales for the three previous seasons and setting the desirable carry-out at zero. The Board then subtracted the estimated carry-in of 57 million pounds from the optimum supply to calculate the production needed from the 2011–12 crop to meet optimum supply. This number, 117 million pounds, was subtracted from USDA's estimated 2011–12 production of 266 million pounds to calculate a surplus of 149 million pounds of tart cherries. The surplus was then divided by the expected production in the regulated districts (253 million pounds) to reach a preliminary restricted percentage of 59 percent for the 2011–12 crop year.

In discussing the results of the OSF calculations, members were in agreement that a restriction was necessary in order to avoid oversupplying the market. However, there was discussion that a 59 percent restriction may be too restrictive considering current market conditions. Board members recognized that the previous season, inventory had been tight, requiring two releases from reserves to meet sales needs. Further, it was stated that exports would likely remain strong in the coming season due to poor production in Europe. Consequently, the Board concluded market conditions justified making an economic adjustment, and the Board voted to add 30 million pounds to free supply, reducing the calculated surplus from 149 million pounds to 119 million pounds.

In addition, USDA's ''Guidelines for Fruit, Vegetable, and Specialty Crop Marketing Orders'' specify that 110 percent of recent years' sales should be made available to primary markets each season before recommendations for volume regulation are approved. Accordingly, § 930.50(g) of the order specifies that in years when restricted percentages are established, the Board shall make available tonnage equivalent to an additional 10 percent of the average sales of the prior three years for market expansion (market growth factor). The Board complied with this requirement by adding 17 million pounds (174 million times 10 percent) to the free supply, further reducing the surplus to 102 million pounds. After these two adjustments, the preliminary restricted percentage was recalculated as 40 percent, as outlined in the following table:

	Millions of pounds
Preliminary Calculations:	
(1) Average sales of the prior three years	174
(2) Plus desirable carry-out	0
(3) Optimum supply calculated by the Board	174
(4) Carry-in as of June 23, 2011	57
(5) Adjusted optimum supply (item 3 minus item 4)	117
(6) USDA crop estimate	266
(7) Surplus (item 6 minus item 5)	149
(8) Economic adjustment	30
(9) Market growth factor	17
(10) Adjusted Surplus (item 7 minus items 8 and 9)	102
(11) Crop estimate for regulated districts	253
Percent	
Preliminary Percentages:	
Restricted (item 10 divided by item 11 × 100)	40
Free (100 minus restricted percentage)	60

The Board met again September 15, 2011, to consider establishing final volume regulation percentages for the 2011–12 season. The final percentages are based on the Board's reported production figures and the supply and

demand information available in September. The actual production for the 2011–12 season was 231 million pounds, 35 million pounds below USDA's June estimate. Concerned about having an adequate volume of cherries in the free market with actual production below the estimate, the Board voted to make a further adjustment of 40 million pounds in addition to the June adjustment. Using the actual production numbers, and accounting for the two adjustments, as well as the market growth factor, the restricted percentage was recalculated.

The Board used the same carry-in figure used in June of 57 million pounds, and subtracted it from the optimum supply of 174 million pounds, calculating the 2011–12 production volume required to meet the optimum supply of 117 million pounds. The 117 million pounds was subtracted from the actual production of 231 million pounds, resulting in a surplus of 114 million pounds of tart cherries. The surplus was then reduced by subtracting the two economic adjustments of 30 million pounds and 40 million pounds, and the market growth factor of 17 million pounds, resulting in an adjusted surplus of 27 million pounds. This surplus was then divided by the actual production in the regulated districts (218 million pounds) to calculate a restricted percentage of 12 percent with a corresponding free percentage of 88 percent for the 2011–12 crop year, as outlined in the following table:

	Millions of pounds
Final Calculations:	
(1) Average sales of the prior three years	174
(2) Plus desirable carry-out	0
(3) Optimum supply calculated by the Board	174
(4) Carry-in as of July 1, 2011	57
(5) Adjusted optimum supply (item 3 minus item 4)	117
(6) Board reported production	231
(7) Surplus (item 6 minus item 5)	114
(8) Total economic adjustments	70
(9) Market growth factor	17
(10) Adjusted Surplus (item 7 minus items 8 and 9)	27
(11) Crop estimate for regulated districts	218
Percent	
Final Percentages:	
Restricted (item 10 divided by item 11 × 100)	12
Free (100 minus restricted percentage)	88

The primary purpose of setting restricted percentages is an attempt to bring supply and demand into balance. If the primary market is oversupplied with cherries, grower prices decline substantially. Restricted percentages have benefited grower returns and helped stabilize the market as compared to those seasons prior to the implementation of the order. The Board believes the available information indicates that a restricted percentage should be established for the 2011–12 crop year to avoid oversupplying the market with tart cherries. Consequently, based on its discussion of this issue and the result of the above calculations, the Board recommended final percentages of 88 percent free and 12 percent restricted by a vote of 13 in favor and 4 against.

Of the four Board members who opposed the recommendation, one believed regulation was unnecessary for the current crop year, while the other three believed the recommended percentages were not restrictive enough. The member who believed the regulation was too restrictive cited strong sales in the previous season and moderate production volume for this crop year. In its discussion regarding the establishment of a restricted percentage for the 2011–12 crop year, the Board did recognize the strong sales in the previous season, as well as the fact that actual production had come in below the production estimate. In response, the Board voted to make two adjustments to make additional volume available. However, the majority of Board members still held that market conditions warranted some level of restriction. Further, the Board could meet and recommend the release of additional volume during the crop year, if warranted.

One of those who opposed the recommendation as not being restrictive enough stated that making the two adjustments and increasing the free volume this season could result in large inventories carrying over into the next season, which would require increased restrictions and dampen prices. Another stated that strong demand might not be sustained in the coming year and making additional fruit available at the onset of the season was premature and could result in an oversupply of the market. One opponent also stated that rather than making adjustments now, the Board could vote to release a portion of reserves later in the season to provide more fruit if necessary. However, most Board members believed that making more fruit available to the market was warranted. Board members cited the two releases from the previous season, sales volume from last year, and the smaller than anticipated crop in support of making more free tonnage available. It was also argued that increasing the volume of cherries available at the onset of the season could facilitate additional sales.

After reviewing the available data, and considering the concerns expressed, the majority of the Board determined that a 12 percent restriction meets sales needs without oversupplying the market. Thus, the Board recommended establishing final percentages of 88 percent free and 12 percent restricted.

Regulatory Flexibility Analysis

Pursuant to requirements set forth in the Regulatory Flexibility Act (RFA) (5 U.S.C. 601–612), the Agricultural Marketing Service (AMS) has considered the economic impact of this action on small entities. Accordingly, AMS has prepared this final regulatory flexibility analysis.

The purpose of the RFA is to fit regulatory actions to the scale of business subject to such actions in order that small businesses will not be unduly or disproportionately burdened. Marketing orders issued pursuant to the Act, and rules issued thereunder, are unique in that they are brought about

through group action of essentially small entities acting on their own behalf.

There are approximately 40 handlers of tart cherries who are subject to regulation under the marketing order and approximately 600 producers of tart cherries in the regulated area. Small agricultural service firms have been defined by the Small Business Administration (SBA) as those having annual receipts of less than $7,000,000, and small agricultural producers are defined as those having annual receipts of less than $750,000 (13 CFR 121.201).

According to the National Agricultural Statistics Service, and Board data, the average annual grower price for tart cherries during the 2010–11 season was $0.221 per pound, and total shipments were around 270 million pounds. Therefore, average receipts for tart cherry producers were around $99,000, well below the SBA threshold for small producers. In 2010, The Food Institute estimated an f.o.b. price of $0.84 per pound for frozen tart cherries, which make up the majority of processed tart cherries. Using this data, average annual handler receipts were about $5.7 million, also below the SBA threshold for small agricultural service firms. Assuming a normal distribution, the majority of producers and handlers of tart cherries may be classified as small entities.

The tart cherry industry in the United States is characterized by wide annual fluctuations in production. According to the National Agricultural Statistics Service, tart cherry production in 2007 was 253 million pounds, 214 million pounds in 2008, 359 million pounds in 2009, and in 2010, production was 190 million pounds. Because of these fluctuations, the supply and demand for tart cherries are rarely in equilibrium.

Demand for tart cherries is inelastic, meaning changes in price have a minimal effect on total sales volume. However, prices are very sensitive to changes in supply, and grower prices vary widely in response to the large swings in annual supply, with prices ranging from a low of 7.3 cents in 1987 to a high of 46.4 cents in 1991.

Because of this relationship between supply and price, oversupplying the market with tart cherries would have a sharp negative effect on prices, driving down grower returns. The Board, aware of this economic relationship, focuses on using the volume control authority in the order in an effort to balance supply and demand in order to stabilize industry returns. This authority allows the industry to set free and restricted percentages as a way to bring supply and demand into balance. Free percentage cherries can be marketed by handlers to any outlet, while restricted percentage volume must be held by handlers in reserve, be diverted or used for exempted purposes.

This final rule establishes final free and restricted percentages for the 2011–12 crop year under the order for tart cherries. This action controls the supply of tart cherries by establishing percentages of 88 percent free and 12 percent restricted for the 2011–12 crop year. These percentages should stabilize marketing conditions by adjusting supply to meet market demand and help improve grower returns. This action regulates tart cherries handled in Michigan, New York, Utah, and Washington. The authority for this action is provided for in §§ 930.51(a) and 930.52 of the order. The Board recommended this action at a meeting on September 15, 2011.

As mentioned earlier, the USDA's ''Guidelines for Fruit, Vegetable, and Specialty Crop Marketing Orders'' specify that 110 percent of recent years' sales should be made available to primary markets each season before recommendations for volume regulation are approved. The quantity available under this rule is 110 percent of the quantity shipped in the prior three years.

This action will result in some fruit being diverted from the primary domestic markets. However, there are secondary uses available for restricted fruit, including the development of new products, sales into new markets, the development of export markets, and being placed in reserve. While these alternatives may provide different levels of return than the sales to primary markets, they play an important role for the industry. The areas of new products, new markets, and the development of export markets utilize restricted fruit to develop and expand the market for tart cherries. Last season, these areas accounted for more than 50 million pounds in sales.

Placing tart cherries into reserves is a key part of balancing supply and demand. Although the industry must bear the costs of handling and storage for fruit in reserve, reserves warehouse supplies in large crop years in order to supplement supplies in short crop years. The reserves allow the industry to mitigate the impact of oversupply in large crop years, while allowing the industry to maintain and supply markets in years where production falls below demand. Further, the costs for storage, interest, and handling of the cherries are more than offset by the increase in price when moving from a large crop to a short crop year.

In addition, this action is less restrictive than in previous seasons and is the lowest restricted percentage since 2008. At this level of restriction, nearly all restricted fruit should be utilized by the end of the crop year. Consequently, it is not anticipated that this action will unduly burden growers or handlers.

While this action could result in some additional costs to the industry, these costs are more than outweighed by the benefits. The purpose of setting restricted percentages is to attempt to bring supply and demand into balance. If the primary market (domestic) is oversupplied with cherries, grower prices decline substantially. Without volume control, the primary market would likely be oversupplied, resulting in lower grower prices.

The three districts in Michigan, along with the districts in Utah, New York, and Washington are the restricted areas for this crop year with a combined total production of 218.4 million pounds. A 12 percent restriction means 192.2 million pounds is available to be shipped to primary markets from these four states. The 192.2 million pounds from the restricted districts, the 12.2 million pounds from the unrestricted districts (Oregon, Pennsylvania, and Wisconsin), and the 57 million pound carry-in inventory make a total of 261.4 million pounds available as free tonnage for the primary markets.

To assess the impact that volume control has on the prices growers receive for their product, an econometric model has been developed. Based on the model, the use of volume control should have a positive impact on grower returns for this crop year. With volume control, grower prices are estimated to be approximately $0.06 per pound higher, and total grower revenue from processed cherries is estimated to be $6.2 million higher than without restrictions. The without-restrictions scenario assumes that all tart cherries produced would be delivered to processors for payments.

Prior to the implementation of the order, grower price often did not come close to covering the cost of production. For the 2011–12 crop year, yield is estimated at approximately 6,470 pounds per acre. At this level of yield, the cost of production is estimated to be $0.33 per pound (costs were estimated by representatives of Michigan State University).

In addition, absent volume control, the industry could start to build large amounts of unwanted inventories. These inventories would have a depressing effect on grower prices. The econometric model shows for every 1 million-pound increase in carry-in

inventories, a decrease in grower prices of $0.0037 per pound occurs.

Retail demand is assumed to be highly inelastic which indicates that changes in price do not result in significant changes in the quantity demanded. Consumer prices largely do not reflect fluctuations in cherry supplies. Therefore, this action should have little or no effect on consumer prices and should not result in a reduction in retail sales.

The free and restricted percentages established by this rule provide the market with optimum supply and apply uniformly to all regulated handlers in the industry, regardless of size. As the restriction represents a percentage of a handler's volume, the costs, when applicable, are proportionate and should not place an extra burden on small entities as compared to large entities.

The stabilizing effects of this action benefits all handlers by helping them maintain and expand markets, despite seasonal supply fluctuations. Likewise, price stability positively impacts all growers and handlers by allowing them to better anticipate the revenues their tart cherries will generate. Growers and handlers, regardless of size, should benefit from the stabilizing effects of this restriction.

One alternative to this action considered was to not regulate the volume of the 2011–12 crop. However, Board members believed that although sales have been strong, there is enough of a surplus to necessitate restricting a portion of the crop to keep prices stable.

Another alternative considered was setting the carry-out value at 10 or 20 million pounds in the OSF. Board members indicated that such a change would require further consideration by the Board, and did not receive sufficient support.

The Board also considered differing levels of adjustments under the OSF when considering supply. The alternative adjustments were deemed to be either too small to address industry needs, or so large that members were concerned with creating an oversupply. Therefore, these alternatives were rejected.

In accordance with the Paperwork Reduction Act of 1995, (44 U.S.C. chapter 35), the order's information collection requirements have been previously approved by the Office of Management and Budget (OMB) and assigned OMB No. 0581–0177, Tart cherries Grown in the States of MI, NY, PA, OR, UT, WA, and WI. No changes in those requirements as a result of this action are necessary. Should any changes become necessary, they would be submitted to OMB for approval.

This action will not impose any additional reporting or recordkeeping requirements on either small or large tart cherry handlers. As with all Federal marketing order programs, reports and forms are periodically reviewed to reduce information requirements and duplication by industry and public sector agencies.

As noted in the initial regulatory flexibility analysis, USDA has not identified any relevant Federal rules that duplicate, overlap or conflict with this rule.

AMS is committed to complying with the E-Government Act, to promote the use of the Internet and other information technologies to provide increased opportunities for citizen access to Government information and services, and for other purposes.

In addition, the Board's meeting was widely publicized throughout the tart cherry industry and all interested persons were invited to attend the meeting and participate in Board deliberations on all issues. Like all Board meetings, the September 15, 2011, meeting was a public meeting and all entities, both large and small, were able to express views on this issue.

A proposed rule concerning this action was published in the **Federal Register** on March 2, 2012 (77 FR 12748). Copies of the rule were mailed or sent via facsimile to all Board members and tart cherry handlers. Finally, the rule was made available through the Internet by USDA and the Office of the Federal Register. A 30-day comment period ending April 2, 2012, was provided to allow interested persons to respond to the proposal. No comments were received.

A small business guide on complying with fruit, vegetable, and specialty crop marketing agreements and orders may be viewed at: *www.ams.usda.gov/MarketingOrdersSmallBusinessGuide.* Any questions about the compliance guide should be sent to Laurel May at the previously mentioned address in the **FOR FURTHER INFORMATION CONTACT** section.

After consideration of all relevant matter presented, including the information and recommendation submitted by the Board and other available information, it is hereby found that this rule, as hereinafter set forth, will tend to effectuate the declared policy of the Act.

It is further found that good cause exists for not postponing the effective date of this rule until 30 days after publication in the **Federal Register** (5 U.S.C. 553) because handlers are already shipping tart cherries from the 2011–2012 crop. Further, handlers are aware of this rule, which was recommended at a public meeting. Also, a 30-day comment period was provided for in the proposed rule.

List of Subjects in 7 CFR Part 930

Marketing agreements, Reporting and recordkeeping requirements, Tart cherries.

For the reasons set forth in the preamble, 7 CFR part 930 is amended as follows:

PART 930—TART CHERRIES GROWN IN THE STATES OF MICHIGAN, NEW YORK, PENNSYLVANIA, OREGON, UTAH, WASHINGTON, AND WISCONSIN

■ 1. The authority citation for 7 CFR part 930 continues to read as follows:

Authority: 7 U.S.C. 601–674.

■ 2. Section 930.256 is added to read as follows:

Note: This section will not appear in the annual Code of Federal Regulations.

§ 930.256 Final free and restricted percentages for the 2011–12 crop year.

The final percentages for tart cherries handled by handlers during the crop year beginning on July 1, 2011, which shall be free and restricted, respectively, are designated as follows: Free percentage, 88 percent and restricted percentage, 12 percent.

Dated: June 13, 2012.

David R. Shipman,

Administrator, Agricultural Marketing Service.

[FR Doc. 2012–14810 Filed 6–15–12; 8:45 am]

BILLING CODE 3410–02–P

DEPARTMENT OF AGRICULTURE

Agricultural Marketing Service

7 CFR Part 983

[Doc. No. AMS–FV–10–0099; FV11–983–1 FR]

Pistachios Grown in California, Arizona, and New Mexico; Order Amending Marketing Order No. 983

AGENCY: Agricultural Marketing Service, USDA.

ACTION: Final rule.

SUMMARY: This final rule amends Marketing Agreement and Order No. 983 (order), which regulates the handling of pistachios grown in California, Arizona, and New Mexico. The amendments were proposed by the

Administrative Committee for Pistachios (Committee), which is responsible for local administration of the order. The amendments will provide authority to establish aflatoxin and quality regulations for pistachios shipped to export markets, including authority to establish different regulations for different markets; change a related section of the order concerning substandard pistachios to conform to the proposed addition of export authority; and correct an erroneous cross-reference to another section of the order. These amendments are intended to provide authority to ensure uniform and consistent aflatoxin and quality regulations in the domestic and various export markets.

DATES: This rule is effective June 19, 2012.

FOR FURTHER INFORMATION CONTACT: Martin Engeler, Marketing Order and Agreement Division, Fruit and Vegetable Program, AMS, USDA, 2202 Monterey Street, Fresno, California, 93721; Telephone: (559) 487–5110, Fax: (559) 487–5906; or Kathleen M. Finn, Marketing Order and Agreement Division, Fruit and Vegetable Program, AMS, USDA, 1400 Independence Avenue SW., Stop 0237, Washington, DC 20250–0237; Telephone: (202) 720–2491, Fax: (202) 720–8938, or Email: *Martin.Engeler@ams.usda.gov* or *Kathy.Finn@ams.usda.gov.*

Small businesses may request information on complying with this regulation by contacting Laurel May, Marketing Order and Agreement Division, Fruit and Vegetable Program, AMS, USDA, 1400 Independence Avenue SW., STOP 0237, Washington, DC 20250–0237; Telephone: (202) 720–2491, Fax: (202) 720–8938, or Email: *Laurel.May@ams.usda.gov.*

SUPPLEMENTARY INFORMATION: This rule is issued under Marketing Agreement and Order No. 983, both as amended (7 CFR part 983), regulating the handling of pistachios produced in California, Arizona, and New Mexico, hereinafter referred to as the ''order.'' The order is effective under the Agricultural Marketing Agreement Act of 1937, as amended (7 U.S.C. 601–674), hereinafter referred to as the ''Act.'' The applicable rules of practice and procedure governing the formulation of marketing agreements and orders (7 CFR part 900) authorize amendment of the order through this informal rulemaking action.

The Department of Agriculture (USDA) is issuing this rule in conformance with Executive Order 12866.

This rule has been reviewed under Executive Order 12988, Civil Justice Reform. This rule is not intended to have retroactive effect.

The Act provides that administrative proceedings must be exhausted before parties may file suit in court. Under section 608c(15)(A) of the Act, any handler subject to an order may file with USDA a petition stating that the order, any provision of the order, or any obligation imposed in connection with the order is not in accordance with law and request a modification of the order or to be exempted therefrom. A handler is afforded the opportunity for a hearing on the petition. After the hearing, USDA would rule on the petition. The Act provides that the district court of the United States in any district in which the handler is an inhabitant, or has his or her principal place of business, has jurisdiction to review USDA's ruling on the petition, provided an action is filed not later than 20 days after the date of the entry of the ruling.

Section 1504 of the Food, Conservation, and Energy Act of 2008 (2008 Farm Bill) (Pub. L. 110–246) made changes to section 18c(17) of the Act, which in turn required the addition of supplemental rules of practice to 7 CFR part 900 (73 FR 49307; August, 21, 2008). The changes to section 18c(17) of the Act and additional supplemental rules of practice authorize the use of informal rulemaking (5 U.S.C. 553) to amend federal fruit, vegetable, and nut marketing agreements and orders if certain criteria are met.

AMS considered the nature and complexity of the proposed amendments, the potential regulatory and economic impacts on affected entities, and other relevant matters, and determined that amending the order as proposed by the Committee could appropriately be accomplished through informal rulemaking.

The proposed amendments were unanimously recommended by the Committee following deliberations at a public meeting on July 9, 2010. A proposed rule soliciting comments on the proposed amendments was issued on June 5, 2011, and published in the **Federal Register** on June 13, 2011 (76 FR 34181). One comment was received in support of the proposed amendments. A proposed rule and referendum order was issued on September 12, 2011, and published in the **Federal Register** on September 15, 2011 (76 FR 57001). This document directed that a referendum among pistachio producers be conducted during the period October 3 through October 14, 2011, to determine whether they favor the proposed amendments to the order. To become effective, the amendments had to be approved by at least two-thirds of the producers voting, or two-thirds of the volume of pistachios represented by voters in the referendum. All of the proposed amendments were favored by at least 97 percent of those voting in the referendum and by at least 98 percent of the volume represented in the referendum.

The amendments included in this final rule will:

(1) Provide authority to establish aflatoxin sampling, analysis, and inspection requirements for shipments of pistachios to export markets, including authority to establish different regulations for different markets;

(2) Provide authority to establish quality and inspection requirements for shipments of pistachios to export markets, including authority to establish different regulations for different markets;

(3) Change a related section of the order concerning substandard pistachios to conform to the proposed addition of export authority; and

(4) Correct an erroneous cross-reference to another section of the order.

An amended marketing agreement was subsequently provided to all pistachio handlers in the production area for their approval. The marketing agreement was approved by handlers representing more than 50 percent of the volume of pistachios handled by all handlers covered under the order.

Final Regulatory Flexibility Analysis

Pursuant to requirements set forth in the Regulatory Flexibility Act (RFA) (5 U.S.C. 601–612), the Agricultural Marketing Service (AMS) has considered the economic impact of this action on small entities. Accordingly, AMS has prepared this final regulatory flexibility analysis.

The purpose of the RFA is to fit regulatory actions to the scale of business subject to such actions in order that small businesses will not be unduly or disproportionately burdened. Marketing orders issued pursuant to the Act, and rules issued thereunder, are unique in that they are brought about through group action of essentially small entities acting on their own behalf.

There are approximately 900 producers and 25 handlers of pistachios in the production area encompassing California, Arizona, and New Mexico. The Small Business Administration (SBA) (13 CFR 121.201) defines small agricultural producers as those having annual receipts of less than $750,000, and small agricultural service firms are

defined as those having annual receipts of less than $7,000,000.

Based on Committee data, it is estimated that over 70 percent of the handlers ship less than $7,000,000 worth of pistachios and would thus be considered small business under the SBA definition. It is also estimated that over 80 percent of the growers in the production area produce less than $750,000 worth of pistachios and would thus be considered small businesses under the SBA definition.

The amendments will provide authority to establish aflatoxin sampling, analysis, and inspection requirements for shipments of pistachios to export markets, including authority to establish different regulations for different markets; provide authority to establish quality and inspection requirements for shipments of pistachios to export markets, including authority to establish different regulations for different markets; change a related section of the order concerning substandard pistachios to conform to the proposed addition of export authority; and correct an erroneous cross-reference to another section of the order.

These amendments were unanimously recommended at a public meeting of the Committee held on July 10, 2010. None of the amendments will have an immediate impact on handlers or producers because they will not establish any requirements or regulations on handlers. However, the amendments that will add authority to the order to regulate exports could impact growers and handlers in the industry if the authority is implemented. Therefore, the potential costs that may be associated with future regulation of exports is discussed below. In the event implementing regulations are subsequently recommended by the Committee, additional analysis of the potential costs and benefits will be conducted as part of the informal rulemaking process.

Under section 983.50 of the order and section 983.150 of the administrative rules and regulations, sampling, analysis, and inspection of pistachios for aflatoxin is required prior to shipment to domestic markets. Specific procedures and requirements for handlers to follow are prescribed. It is anticipated that any requirements recommended for export shipments would be similar to those in effect for domestic shipments. Thus, the associated costs would be similar.

The costs of complying with aflatoxin regulations can be broken into three basic elements: sampling of the product, the market value of the product samples that are used in testing, and the cost of the aflatoxin analysis performed by laboratories. These costs can vary among handlers depending on their particular operations. In recognition of this, the Committee provided estimates of the various cost elements for purposes of this discussion.

The cost of drawing samples from lots is estimated to range from $50.00 to $75.00 per lot. The variation in this cost can be attributed to factors such as the type of inspection program utilized by handlers. For purposes of this evaluation a cost factor of $70.00 per lot is utilized. The cost of the product used in sampling and testing varies depending upon the market price for pistachios. For purposes of this evaluation a value of $3.00 per pound as estimated by the Committee is utilized. At $3.00 per pound and a 44-pound sample, the cost of product used in sampling is $132.00 per lot. Laboratory costs for analyzing aflatoxin content are estimated to be $100.00 per test; with two tests per lot, the cost is $200.00 per lot.

Pistachio lots tested for aflatoxin can vary in size, but for purposes of this evaluation, a lot size of 50,000 pounds is used as that is a reasonable representative size for a typical handler operation. Applying the above cost estimates to a lot size of 50,000 pounds results in the following cost estimates on a per pound basis:

1. *Sampling cost:* $0.0014 per pound ($70.00 per lot divided by 50,000 pounds).

2. *Value of product used in sampling:* $0.0026 per pound ($132.00 per lot divided by 50,000 pounds).

3. Analytical cost of aflatoxin testing: $0.0040 per pound ($200 per sample divided by 50,000 pounds).

This results in a total estimated per pound cost of $0.0080 ($0.0014 + $0.0026 + $0.0040), or 0.8 cents per pound.

When compared to the market price for pistachios, the direct costs associated with an aflatoxin program are proportionately small. Utilizing a market price of $3.00 per pound as used in the above cost estimates, the costs of aflatoxin sampling and testing represent 0.27 percent of the market price. Even if the market price for pistachios was $1.00 per pound, the aflatoxin sampling and testing costs would be well below one percent of the price.

Most handlers who shipped pistachios to export markets in the past were signatories to a state marketing agreement that required aflatoxin sampling and analysis. That program was terminated in 2010. Since then, most handlers reportedly conduct aflatoxin testing and certification on export shipments to satisfy the requirements of the various markets. Therefore, the costs discussed above are already being borne by handlers.

While difficult to quantify, one of the primary benefits of an aflatoxin program is the reduced risk of a potential food incident. For example, in the late 1990's, high aflatoxin levels were detected in pistachios in European markets. This led to a 60 percent decrease in pistachio imports in Europe, and it took several years for the market to return to more normal levels. The U.S was not dominant in the European market at that time, but in recent years, Europe has become an increasingly significant market for U.S. pistachios. Regardless of the location of the market, this example demonstrates the devastating effect a food quality or food safety issue can have on the marketing of a product.

Another benefit of an aflatoxin testing program is the resulting reduction in the incidence of rejected shipments at their destination. Many countries test product prior to allowing its importation. Product that does not meet the importing country's standards can be rejected and returned to the shipper. It is estimated that the cost of handling or returning a rejected lot is between $12,000 and $15,000 per lot. Product that has been tested prior to shipment based on the requirements of its market destination is less likely to be rejected and would not incur the associated costs.

Avoiding a disruption in the marketing of pistachios in export markets is important in maintaining the viability of the industry. Shipments of open inshell pistachios increased dramatically in recent years; from 95,761,666 pounds in the 2004–05 shipping season to 192,436,136 pounds in the 2009–10 season, according to Committee data. Exports represented approximately 63 percent of total U.S. pistachio shipments during the 2009–10 season. According to statistics reported by the Committee, total acreage in California increased from 117,773 acres in 2004 to 215,336 acres in 2010, representing an 83 percent increase. Much of this newer acreage is non-bearing and will come into production in the near future. These statistics demonstrate that domestic production of pistachios will continue to increase in the future, and export markets must be maintained to accommodate the increased supplies.

Expanding order authority to include establishing aflatoxin requirements applicable to export shipments will

provide an additional tool to aid in the marketing of pistachios covered under the order. In the event the authority is implemented, the potential costs associated with a mandatory aflatoxin program for exports are expected to be more than offset by the potential benefits discussed above.

An analysis of the potential costs of adding authority to the order to establish quality regulations is not possible because no quality regulations are currently in effect under the order, and none are being contemplated. Quality regulations were in effect for domestic shipments from 2004 through 2007, but were suspended because they were no longer meeting the industry's needs. However, the order still contains broad authority for domestic quality regulations and the industry may desire to reinstate them if circumstances warrant. As a result of the increasing importance of the export market as demonstrated above, the Committee recommended adding authority to the order for quality regulation for export shipments in the event circumstances in the future warrant their implementation.

A unanimous action of the Committee will be required to recommend the establishment of any export quality regulations. In addition, informal rulemaking will be required for implementation, and an analysis of the potential costs and benefits will need to be conducted during that process.

The remaining amendments are administrative in nature and will have no economic impact on growers or handlers. One of the proposed amendments adds conforming language to another section of the order as a result of approval of other amendments, and another proposed amendment will correct an incorrect section reference in the order.

Alternatives to these proposals include making no changes at this time. However, the Committee believes it will be beneficial to have the means necessary to apply regulations to the export markets if circumstances warrant.

In accordance with the Paperwork Reduction Act of 1995 (44 U.S.C. chapter 35), the order's information collection requirements have been previously approved by the Office of Management and Budget (OMB) and assigned OMB No. 0581–0215, ''Pistachios Grown in California''. No changes in those requirements as a result of this proceeding are anticipated. Should any changes become necessary, they will be submitted to OMB for approval.

As with all Federal marketing order programs, reports and forms are periodically reviewed to reduce information requirements and duplication by industry and public sector agencies.

In addition, USDA has not identified any relevant Federal rules that duplicate, overlap, or conflict with this rule.

AMS is committed to complying with the E-Government Act, to promote the use of the Internet and other information technologies to provide increased opportunities for citizen access to Government information and services, and for other purposes.

The Committee's meeting, at which these proposals were discussed, was widely publicized throughout the pistachio industry. All interested persons were invited to attend the meeting and encouraged to participate in Committee deliberations on all issues. Like all Committee meetings, the meeting was public, and all entities, both large and small, were encouraged to express their views on these proposals.

A proposed rule concerning this action was issued on June 5, 2011, and published in the **Federal Register** on June 13, 2011 (76 FR 34181). Copies of the rule were mailed or sent via facsimile to all Committee members and pistachio handlers. Finally, the rule was made available through the Internet by USDA and the Office of the Federal Register. A 30-day comment period ending July 13, 2011, was provided to allow interested persons to respond to the proposal. One comment was received in response to the proposal. The comment, submitted on behalf of a pistachio trade association, was supportive of the proposed amendments. No changes were made to the proposed amendments, based on the comment received.

A proposed rule and referendum order was then issued on September 12, 2011, and published in the **Federal Register** on September 15, 2011 (74 FR 57001). This document directed that a referendum among pistachio producers be conducted during the period October 3 through October 14, 2011, to determine whether they favor the proposed amendments to the order. To become effective, the amendments had to be approved by at least two-thirds of the producers voting, or two-thirds of the volume of pistachios represented by voters in the referendum. All of the proposed amendments were favored by at least 97 percent of those voting in the referendum and by at least 98 percent of the volume represented in the referendum.

An amended marketing agreement was subsequently provided to all pistachio handlers in the production area for their approval. The marketing agreement was approved by handlers representing more than 50 percent of the volume of pistachios handled by all handlers covered under the order.

A small business guide on complying with fruit, vegetable, and specialty crop marketing agreements and orders may be viewed at: *www.ams.usda.gov/MarketingOrdersSmallBusinessGuide*. Any questions about the compliance guide should be sent to Laurel May at the previously mentioned address in the **FOR FURTHER INFORMATION CONTACT** section.

Order Amending the Order Regulating the Handling of Pistachios Grown in California, Arizona, and New Mexico Findings and Determinations

(a) Findings and Determinations Upon the Basis of the Rulemaking Record

The findings hereinafter set forth are supplementary to the findings and determinations which were previously made in connection with the issuance of the marketing agreement and order; and all said previous findings and determinations are hereby ratified and affirmed, except insofar as such findings and determinations may be in conflict with the findings and determinations set forth herein.

1. The marketing agreement and order, as amended, and all of the terms and conditions thereof, will tend to effectuate the declared policy of the Act;

2. The marketing agreement and order, as amended, regulate the handling of pistachios grown in California, Arizona, and New Mexico in the same manner as, and are applicable only to, persons in the respective classes of commercial and industrial activity specified in the marketing agreement and order;

3. The marketing agreement and order, as amended, are limited in application to the smallest regional production area which is practicable, consistent with carrying out the declared policy of the Act, and the issuance of several orders applicable to subdivisions of the production area would not effectively carry out the declared policy of the Act;

4. The marketing agreement and order, as amended, prescribe, insofar as practicable, such different terms applicable to different parts of the production area as are necessary to give due recognition to the differences in the production and marketing of pistachios produced or packed in the production area; and

5. All handling of pistachios produced in the production area as

defined in the marketing agreement and order is in the current of interstate or foreign commerce or directly burdens, obstructs, or affects such commerce.

(b) Additional Findings

It is necessary and in the public interest to make these amendments effective not later than one day after publication in the **Federal Register**. A later effective date would unnecessarily delay implementation of the amendments. These amendments should be in place as soon as possible so that any regulations recommended as a result of these amendments can be in place prior to the next production year, which begins on September 1. In view of the foregoing, it is hereby found and determined that good cause exists for making these amendments effective one day after publication in the **Federal Register**, and that it would be contrary to the public interest to delay the effective date for 30 days after publication in the **Federal Register**. (Sec. 553(d), Administrative Procedure Act; 5 U.S.C. 551–559.)

(c) Determinations

It is hereby determined that:

1. The ''Marketing Agreement Regulating the Handling of Pistachios Grown in California, Arizona, and New Mexico,'' has been signed by handlers (excluding cooperative associations of producers who are not engaged in processing, distributing, or shipping pistachios covered under the order) who during the period September 1, 2010, through August 31, 2011, handled not less than 50 percent of the volume of such pistachios covered under the order; and

2. The issuance of this amendatory order, amending the aforesaid order, is favored or approved by at least two-thirds of the producers who participated in a referendum on the question of approval and who, during the period of September 1, 2010, through August 31, 2011, have been engaged within the production area in the production of such pistachios, such producers having also produced for market at least two-thirds of the volume of such commodity represented in the referendum.

Order Relative to Handling

It is therefore ordered, That on and after the effective date hereof, all handling of pistachios grown in California, Arizona, and New Mexico shall be in conformity to, and in compliance with, the terms and conditions of the said order as hereby amended as follows:

The provisions of the proposed marketing order amending the order contained in the proposed rule issued by the Administrator on September 12, 2011, and published in the **Federal Register** on September 15, 2011 (76 FR 57001), shall be and are the terms and provisions of this order amending the order and are set forth in full herein.

List of Subjects in 7 CFR Part 983

Pistachios, Marketing agreements and orders, Reporting and recordkeeping requirements.

For the reasons set forth in the preamble, 7 CFR Part 983 is amended as follows:

PART 983—PISTACHIOS GROWN IN CALIFORNIA, ARIZONA, AND NEW MEXICO

■ 1. The authority citation for 7 CFR part 983 continues to read as follows:

Authority: 7 U.S.C. 601–674.

■ 2. Revise § 983.50 to read as follows:

§ 983.50 Aflatoxin regulations.

The committee shall establish, with the approval of the Secretary, such aflatoxin sampling, analysis, and inspection requirements applicable to pistachios to be shipped for domestic human consumption as will contribute to orderly marketing or be in the public interest. The committee may also establish, with the approval of the Secretary, such requirements for pistachios to be shipped for human consumption in export markets. No handler shall ship, for human consumption in domestic, or if applicable, export markets, pistachios that exceed an aflatoxin level established by the committee and approved by the Secretary. All shipments to markets for which requirements have been established must be covered by an aflatoxin inspection certificate. The committee may, with the approval of the Secretary, establish different sampling, analysis, and inspection requirements, and different aflatoxin level requirements, for different markets.

■ 3. Revise § 983.51 to read as follows:

§ 983.51 Quality regulations.

For any production year, the committee may establish, with the approval of the Secretary, such quality and inspection requirements applicable to pistachios shipped for human consumption in domestic or export markets as will contribute to orderly marketing or be in the public interest. In such production year, no handler shall ship pistachios for human consumption in domestic, or if applicable, export markets unless they meet the applicable requirements as evidenced by certification acceptable to the committee. The committee may, with the approval of the Secretary, establish different quality and inspection requirements for different markets.

■ 4. Amend § 983.53 by removing the reference to ''§ 983.50'' an adding in its place ''§ 983.52'' in paragraph (a)(2).

■ 5. Revise § 983.57 to read as follows:

§ 983.57 Substandard pistachios.

The committee shall, with the approval of the Secretary, establish such reporting and disposition procedures as it deems necessary to ensure that pistachios which do not meet aflatoxin and quality requirements are not shipped for human consumption in those markets for which such requirements exist pursuant to § 983.50 and § 983.51.

Dated: June 13, 2012.

David R. Shipman,

Administrator, Agricultural Marketing Service.

[FR Doc. 2012–14813 Filed 6–15–12; 8:45 am]

BILLING CODE 3410–02–P

DEPARTMENT OF TRANSPORTATION

Federal Aviation Administration

14 CFR Part 25

[Docket No. FAA–2012–0625; Special Conditions No. 25–465–SC]

Special Conditions: Gulfstream Aerospace LP (GALP), Model Gulfstream G280 Airplane; Aircraft Electronic System Security Protection From Unauthorized External Access

AGENCY: Federal Aviation Administration (FAA), DOT.

ACTION: Final special conditions; request for comments.

SUMMARY: These special conditions are issued for the Gulfstream Aerospace LP, Model Gulfstream G280 airplane. This airplane will have novel or unusual design features associated with the architecture and connectivity capabilities of the airplane's computer systems and networks, which may allow access to or by external computer systems and networks. Connectivity to, or access by, external systems and networks may result in security vulnerabilities to the airplane's systems. The applicable airworthiness regulations do not contain adequate or appropriate safety standards for these design features. These special conditions contain the additional safety standards that the Administrator

considers necessary to establish a level of safety equivalent to that established by the existing airworthiness standards.

DATES: The effective date of these special conditions is June 7, 2012. We must receive your comments by August 2, 2012.

ADDRESSES: Send comments identified by docket number FAA–2012–0625 using any of the following methods:

- *Federal eRegulations Portal:* Go to *http://www.regulations.gov/* and follow the online instructions for sending your comments electronically.
- *Mail:* Send comments to Docket Operations, M–30, U.S. Department of Transportation (DOT), 1200 New Jersey Avenue SE., Room W12–140, West Building Ground Floor, Washington, DC 20590–0001.
- *Hand Delivery or by Courier:* Take comments to Docket Operations in Room W12–140 of the West Building Ground Floor at 1200 New Jersey Avenue SE., Washington, DC, between 8 a.m. and 5 p.m., Monday through Friday, except federal holidays.
- *Fax:* Fax comments to Docket Operations at 202–493–2251.

Privacy: The FAA will post all comments it receives, without change, to *http://www.regulations.gov/,* including any personal information the commenter provides. Using the search function of the docket Web site, anyone can find and read the electronic form of all comments received into any FAA docket, including the name of the individual sending the comment (or signing the comment for an association, business, labor union, etc.). DOT's complete Privacy Act Statement can be found in the **Federal Register** published on April 11, 2000 (65 FR 19477–19478), as well as at *http://govDocketsInfo.govdot.govgov/.*

Docket: Background documents or comments received may be read at *http://www.regulations.gov/* at any time. Follow the online instructions for accessing the docket or go to the Docket Operations in Room W12–140 of the West Building Ground Floor at 1200 New Jersey Avenue SE., Washington, DC, between 9 a.m. and 5 p.m., Monday through Friday, except Federal holidays.

FOR FURTHER INFORMATION CONTACT: Varun Khanna, FAA, Airplane and Flight Crew Interface Branch, ANM–111, Transport Airplane Directorate, Aircraft Certification Service, 1601 Lind Avenue SW., Renton, Washington 98057–3356; telephone 425–227–1298; facsimile 425–227–1149.

SUPPLEMENTARY INFORMATION: The FAA has determined that notice of, and opportunity for prior public comment on, these special conditions are impracticable because these procedures would significantly delay issuance of the design approval and thus delivery of the affected aircraft. In addition, the substance of these special conditions has been subject to the public comment process in several prior instances with no substantive comments received. The FAA therefore finds that good cause exists for making these special conditions effective upon issuance.

Comments Invited

We invite interested people to take part in this rulemaking by sending written comments, data, or views. The most helpful comments reference a specific portion of the special conditions, explain the reason for any recommended change, and include supporting data.

We will consider all comments we receive by the closing date for comments. We may change these special conditions based on the comments we receive.

Background

On March 30, 2006, Gulfstream Aerospace LP (hereafter referred to as ''GALP'') applied for a type certificate for their new Model Gulfstream G280 (hereafter referred to as ''Model G280'') airplane. The Model G280 is a two-engine jet transport airplane with a maximum takeoff weight of 39,600 pounds and an emergency exit arrangement to support a maximum of 19 passengers. Although the Model G280 design includes occupancy provisions for pilot and copilot only (no passengers), GALP requested issuance of these special conditions to support efficient design and certification of passenger cabin interiors through the supplemental type certification process.

Type Certification Basis

Under the provisions of Title 14, Code of Federal Regulations (14 CFR) 21.17, GALP must show that the Model G280 meets the applicable provisions of part 25, as amended by Amendments 25–1 through 25–120, thereto, and Amendment 25–122. In addition, the certification basis includes certain special conditions, exemptions, and equivalent safety findings that are not relevant to these special conditions.

If the Administrator finds that the applicable airworthiness regulations (i.e., 14 CFR part 25) do not contain adequate or appropriate safety standards for the Model G280 because of a novel or unusual design feature, special conditions are prescribed under the provisions of § 21.16.

Special conditions are initially applicable to the model for which they are issued. Should the type certificate for that model be amended later to include any other model that incorporates the same novel or unusual design feature, the special conditions would also apply to the other model.

In addition to the applicable airworthiness regulations and special conditions, the Model G280 must comply with the fuel vent and exhaust emission requirements of 14 CFR part 34 and the noise certification requirements of 14 CFR part 36; and the FAA must issue a finding of regulatory adequacy under section 611 of Public Law 92–574, the ''Noise Control Act of 1972.''

The FAA issues special conditions, as defined in 14 CFR 11.19, in accordance with § 11.38, and they become part of the type certification basis under § 21.17(a)(2).

Novel or Unusual Design Features

The Model G280 will incorporate the following novel or unusual design features: Digital systems architecture composed of several connected networks. The proposed architecture and network configuration may be used for, or interfaced with, a diverse set of functions, including:

1. Flight-safety related control, communication, display, monitoring, and navigation systems (aircraft control functions);
2. Airline business and administrative support (airline information services);
3. Passenger information and entertainment systems (passenger entertainment services); and,
4. The capability to allow access to or by systems external to the airplane.

Discussion

The Model G280 architecture and network configuration may allow increased connectivity to, or access by, external airplane sources, airline operations, and maintenance systems to the aircraft control functions and airline information services. The aircraft control functions and airline information services perform functions required for the safe operation and maintenance of the airplane. Previously these functions and services had very limited connectivity with external sources. The architecture and network configuration may allow the exploitation of network security vulnerabilities resulting in intentional or unintentional destruction, disruption, degradation, or exploitation of data, systems, and networks critical to the safety and maintenance of the airplane. The existing regulations and guidance material did not anticipate these types of airplane system architectures.

Furthermore, 14 CFR regulations and current system safety assessment policy and techniques do not address potential security vulnerabilities, which could be exploited by unauthorized access to airplane systems, data buses, and servers. Therefore, these special conditions are issued to ensure that the security (i.e., confidentiality, integrity, and availability) of airplane systems is not compromised by unauthorized wired or wireless electronic connections.

Applicability

As discussed above, these special conditions are applicable to the Model G280. Should GALP apply at a later date for a change to the type certificate to include another model incorporating the same novel or unusual design feature, the special conditions would apply to that model as well.

Conclusion

This action affects only certain novel or unusual design features on one model of airplane. It is not a rule of general applicability.

The substance of these special conditions has been subjected to the notice and comment period in several prior instances and has been derived without substantive change from those previously issued. It is unlikely that prior public comment would result in a significant change from the substance contained herein. Therefore, because a delay would significantly affect the certification of the airplane, which is imminent, the FAA has determined that prior public notice and comment are unnecessary and impracticable, and good cause exists for adopting these special conditions upon issuance. The FAA is requesting comments to allow interested persons to submit views that may not have been submitted in response to the prior opportunities for comment described above.

List of Subjects in 14 CFR Part 25

Aircraft, Aviation safety, Reporting and recordkeeping requirements.

The authority citation for these special conditions is as follows:

Authority: 49 U.S.C. 106(g), 40113, 44701, 44702, 44704.

The Special Conditions

Accordingly, pursuant to the authority delegated to me by the Administrator, the following special conditions are issued as part of the type certification basis for Gulfstream Aerospace LP, Model Gulfstream G280 airplanes.

1. Airplane Electronic System Security Protection from Unauthorized External Access. The applicant must ensure airplane electronic system security protection from access to or by unauthorized sources external to the airplane, including those possibly caused by maintenance activity.

2. The applicant must ensure that electronic system security threats are identified and assessed, and that effective electronic system security protection strategies are implemented to protect the airplane from all adverse impacts on safety, functionality, and continued airworthiness.

3. The applicant must establish appropriate procedures to allow the operator to ensure that continued airworthiness of the aircraft is maintained, including all post type certification modifications that may have an impact on the approved electronic system security safeguards.

Issued in Renton, Washington, on June 7, 2012.

Michael J. Kaszycki,

Acting Manager, Transport Airplane Directorate, Aircraft Certification Service.

[FR Doc. 2012–14787 Filed 6–15–12; 8:45 am]

BILLING CODE 4910–13–P

DEPARTMENT OF TRANSPORTATION

Federal Aviation Administration

14 CFR Part 39

[Docket No. FAA–2012–0250; Directorate Identifier 2011–CE–043–AD; Amendment 39–17063; AD 2012–10–14]

RIN 2120–AA64

Airworthiness Directives; SOCATA Airplanes

AGENCY: Federal Aviation Administration (FAA), Department of Transportation (DOT).

ACTION: Final rule.

SUMMARY: We are adopting a new airworthiness directive (AD) for SOCATA Model TBM 700 airplanes. This AD results from mandatory continuing airworthiness information (MCAI) issued by an aviation authority of another country to identify and correct an unsafe condition on an aviation product. The MCAI describes the unsafe condition as installation of an incorrect part number during overhaul of the nose landing gear. We are issuing this AD to require actions to address the unsafe condition on these products.

DATES: This AD is effective July 23, 2012.

The Director of the Federal Register approved the incorporation by reference of certain publications listed in the AD as of July 23, 2012.

ADDRESSES: You may examine the AD docket on the Internet at *http://www.regulations.gov* or in person at Document Management Facility, U.S. Department of Transportation, Docket Operations, M–30, West Building Ground Floor, Room W12–140, 1200 New Jersey Avenue SE., Washington, DC 20590.

For service information identified in this AD, contact SOCATA—Direction des Services, 65921 Tarbes Cedex 9, France; telephone: +33 (0)5 62 41 73 00; fax: +33 (0)5 62 41 76 54; or in the United States contact SOCATA North America, Inc., North Perry Airport, 7501 South Airport Road, Pembroke Pines, Florida 33023; telephone: (954) 893–1400; fax: (954) 964–4141; email: *mysocata@socata.daher.com;* Internet: *www.socatanorthamerica.com.* You may review copies of the referenced service information at the FAA, Small Airplane Directorate, 901 Locust, Kansas City, Missouri 64106. For information on the availability of this material at the FAA, call (816) 329–4148.

FOR FURTHER INFORMATION CONTACT: Albert Mercado, Aerospace Engineer, FAA, Small Airplane Directorate, 901 Locust, Room 301, Kansas City, Missouri 64106; telephone: (816) 329–4119; fax: (816) 329–4090; email: *albert.mercado@faa.gov.*

SUPPLEMENTARY INFORMATION:

Discussion

We issued a notice of proposed rulemaking (NPRM) to amend 14 CFR part 39 to include an AD that would apply to the specified products. That NPRM was published in the **Federal Register** on March 9, 2012 (77 FR 14314). That NPRM proposed to correct an unsafe condition for the specified products. The MCAI states:

> A TBM 700 operator reported a case of rupture of the bolt attaching the actuator hinge axle on the NLG of the aeroplane. The results of the technical investigations carried out by SOCATA revealed that this rupture could have been caused by the installation of a bolt bearing incorrect Part Number (P/N) during overhaul of the NLG. Furthermore, the investigations led to identify the NLG part numbers identified by S/N which are potentially affected after repair or overhaul.
>
> This condition, if not detected and corrected, could lead to partial disengagement of the actuator hinge axle on the NLG of the aeroplane, resulting in nose landing gear collapse, possibly resulting in structural damage to the aeroplane.
>
> To address this condition, SOCATA have developed Service Bulletin SB 70–194–32 which gives instructions for accomplishing repetitive checks of the bolt attaching actuator hinge axle on NLG and for replacing

the bolt attaching the actuator hinge axle with a correct bolt P/N.

For the reasons described above, this AD requires accomplishment of repetitive checks of potentially affected NLGs and replacement of the bolt attaching the actuator hinge axle with a serviceable bolt. This AD also prohibits installation on any aeroplane of a potentially affected NLG, unless the bolt attaching the actuator hinge axle has been replaced with a serviceable bolt and the NLG has been marked with a green varnish line.

Following issuance of EASA AD 2011–0225–E, it has been determined that further NLG P/Ns and S/Ns are affected by this AD. SOCATA have developed an erratum to SB 70–194–32 amendment 2, which lists the new P/Ns and S/Ns as well affected by this AD.

For the above reason, this AD, which supersedes EASA AD 2011–0225–E, retaining its requirements, extends the list of NLG P/Ns and S/Ns affected by the AD requirements.

Comments

We gave the public the opportunity to participate in developing this AD. We received no comments on the NPRM (77 FR 14314, March 9, 2012) or on the determination of the cost to the public.

Conclusion

We reviewed the relevant data and determined that air safety and the public interest require adopting the AD as proposed except for minor editorial changes. We have determined that these minor changes:

- Are consistent with the intent that was proposed in the NPRM (77 FR 14314, March 9, 2012) for correcting the unsafe condition; and
- Do not add any additional burden upon the public than was already proposed in the NPRM (77 FR 14314, March 9, 2012).

Costs of Compliance

We estimate that this AD will affect 448 products of U.S. registry. We also estimate that it would take about 1 work-hour per product to comply with the basic requirements of this AD. The average labor rate is $85 per work-hour. Required parts would cost about $35 per product.

Based on these figures, we estimate the cost of the AD on U.S. operators to be $53,760, or $120 per product.

According to the manufacturer, some of the costs of this AD may be covered under warranty, thereby reducing the cost impact on affected individuals. We do not control warranty coverage for affected individuals. As a result, we have included all costs in our cost estimate.

Authority for This Rulemaking

Title 49 of the United States Code specifies the FAA's authority to issue rules on aviation safety. Subtitle I, section 106, describes the authority of the FAA Administrator. ''Subtitle VII: Aviation Programs,'' describes in more detail the scope of the Agency's authority.

We are issuing this rulemaking under the authority described in ''Subtitle VII, Part A, Subpart III, Section 44701: General requirements.'' Under that section, Congress charges the FAA with promoting safe flight of civil aircraft in air commerce by prescribing regulations for practices, methods, and procedures the Administrator finds necessary for safety in air commerce. This regulation is within the scope of that authority because it addresses an unsafe condition that is likely to exist or develop on products identified in this rulemaking action.

Regulatory Findings

We determined that this AD will not have federalism implications under Executive Order 13132. This AD will not have a substantial direct effect on the States, on the relationship between the national government and the States, or on the distribution of power and responsibilities among the various levels of government.

For the reasons discussed above, I certify this AD:

(1) Is not a ''significant regulatory action'' under Executive Order 12866,

(2) Is not a ''significant rule'' under the DOT Regulatory Policies and Procedures (44 FR 11034, February 26, 1979),

(3) Will not affect intrastate aviation in Alaska, and

(4) Will not have a significant economic impact, positive or negative, on a substantial number of small entities under the criteria of the Regulatory Flexibility Act.

Examining the AD Docket

You may examine the AD docket on the Internet at *http://www.regulations.gov;* or in person at the Docket Management Facility between 9 a.m. and 5 p.m., Monday through Friday, except Federal holidays. The AD docket contains the NPRM, the regulatory evaluation, any comments received, and other information. The street address for the Docket Office (telephone (800) 647–5527) is in the **ADDRESSES** section. Comments will be available in the AD docket shortly after receipt.

List of Subjects in 14 CFR Part 39

Air transportation, Aircraft, Aviation safety, Incorporation by reference, Safety.

Adoption of the Amendment

Accordingly, under the authority delegated to me by the Administrator, the FAA amends 14 CFR part 39 as follows:

PART 39—AIRWORTHINESS DIRECTIVES

■ 1. The authority citation for part 39 continues to read as follows:

Authority: 49 U.S.C. 106(g), 40113, 44701.

§ 39.13 [Amended]

■ 2. The FAA amends § 39.13 by adding the following new AD:

2012–10–14 SOCATA: Amendment 39–17063; Docket No. FAA–2012–0250; Directorate Identifier 2011–CE–043–AD.

(a) Effective Date

This airworthiness directive (AD) becomes effective July 23, 2012.

(b) Affected ADs

None.

(c) Applicability

This AD applies to SOCATA Model TBM 700 airplanes, all serial numbers (S/N), certificated in any category, equipped with one of the following landing gears:

(1) Part number (P/N) D23766000 or D23766000–X, serial numbers (S/N) B001 through B373; B375; AR1000 through AR1023; AR1025 through AR1031; AR1033 through AR1036; AAB00000A through AAB13766Z; AAB00000 through AAB13766; and EURXXX; or

(2) P/N 21130–001–XY or 21130–000–XY, all S/N.

(d) Subject

Air Transport Association of America (ATA) Code 32: Landing Gear.

(e) Reason

This AD was prompted by mandatory continuing airworthiness information (MCAI) originated by an aviation authority of another country to identify and correct an unsafe condition on an aviation product. The MCAI describes the unsafe condition as installation of an incorrect part number during overhaul of the nose landing gear. We are issuing this AD to detect and correct installation of incorrect P/N NLG bolts, which if not corrected could result in NLG collapse with consequent structural damage to the airplane.

(f) Actions and Compliance

Unless already done, do the following actions using the Accomplishment Instructions of DAHER-SOCATA TBM Aircraft Mandatory Service Bulletin SB 70–194–32, Amendment 2, dated November 2011, including Erratum, dated December 2011:

(1) Although the European Aviation Safety Agency (EASA) MCAI allows the inspection of the NLG washer to be done by a pilot-owner, the U.S. regulatory system requires all actions of this AD to be done by a certified mechanic.

(2) Within 5 flight cycles (FC) after July 23, 2012 (the effective date of this AD), inspect the installed NLG to determine if it is one of the affected P/Ns and S/Ns as listed in paragraph (c) of this AD.

(i) If FC data is not available, the use of a one-to-one FC to flight hour conversion must be applied (example: 5 FC equal 5 hours time-in-service (TIS)).

(ii) For the purpose of this AD, when an NLG P/N reference is followed by –X or –XY, the X or XY can be any numerical digit, and when an NLG S/N reference is EURXXX, the XXX can be any numerical digit.

(3) If during the inspection required in paragraph (f)(2) of this AD, you determine the NLG installed is one of the affected P/Ns and S/Ns listed in paragraph (c) of the AD, inspect for free rotation the washer of the NLG. Repetitively thereafter inspect the washer of the NLG for free rotation before every flight until the replacement and landing gear marking required in paragraphs (f)(4)(i) and (f)(4)(ii) or paragraphs (f)(5)(i) and (f)(5)(ii) of this AD are done.

(4) If, during any inspection required by paragraph (f)(3) of this AD, the washer of the NLG rotates freely, before further flight, do the following actions:

(i) Replace the bolt attaching the actuator hinge axle of the NLG with a serviceable bolt P/N 5101301111.

(ii) Mark the landing gear with a green varnish line.

(5) For the NLG P/Ns and S/Ns as listed in paragraph (c) of this AD, within 10 months after July 23, 2012 (the effective date of this AD), unless already done following a discrepancy identified during any inspection as required by paragraph (f)(3) of this AD, do the following actions:

(i) Replace the bolt attaching the actuator hinge axle of the NLG with a serviceable bolt P/N 5101301111 and;

(ii) Mark the landing gear with a green varnish line.

(6) Replacing of the bolt attaching the actuator hinge axle of the NLG with a serviceable bolt P/N 5101301111 and marking the landing gear with a green varnish line terminates the repetitive inspections required by paragraph (f)(3) of this AD.

(7) After July 23, 2012 (the effective date of this AD), do not install an NLG with P/N and S/N as listed in paragraph (c) of this AD, unless the bolt attaching the actuator hinge axle of the NLG has been replaced and the NLG has been marked with a green varnish line following the requirements of this AD.

(g) Other FAA AD Provisions

The following provisions also apply to this AD:

(1) *Alternative Methods of Compliance (AMOCs):* The Manager, Standards Office, FAA, has the authority to approve AMOCs for this AD, if requested using the procedures found in 14 CFR 39.19. Send information to ATTN: Albert Mercado, Aerospace Engineer, FAA, Small Airplane Directorate, 901 Locust, Room 301, Kansas City, Missouri 64106; telephone: (816) 329–4119; fax: (816) 329–4090; email: *albert.mercado@faa.gov.* Before using any approved AMOC on any airplane to which the AMOC applies, notify your appropriate principal inspector (PI) in the FAA Flight Standards District Office (FSDO), or lacking a PI, your local FSDO.

(2) *Airworthy Product:* For any requirement in this AD to obtain corrective actions from a manufacturer or other source, use these actions if they are FAA-approved. Corrective actions are considered FAA-approved if they are approved by the State of Design Authority (or their delegated agent). You are required to assure the product is airworthy before it is returned to service.

(3) *Reporting Requirements:* For any reporting requirement in this AD, a federal agency may not conduct or sponsor, and a person is not required to respond to, nor shall a person be subject to a penalty for failure to comply with a collection of information subject to the requirements of the Paperwork Reduction Act unless that collection of information displays a current valid OMB Control Number. The OMB Control Number for this information collection is 2120–0056. Public reporting for this collection of information is estimated to be approximately 5 minutes per response, including the time for reviewing instructions, completing and reviewing the collection of information. All responses to this collection of information are mandatory. Comments concerning the accuracy of this burden and suggestions for reducing the burden should be directed to the FAA at: 800 Independence Ave. SW., Washington, DC 20591, Attn: Information Collection Clearance Officer, AES–200.

(h) Related Information

Refer to MCAI EASA AD No.: 2011–0235–E, dated December 13, 2011; DAHER-SOCATA TBM Aircraft Mandatory Service Bulletin SB 70–194–32, Amendment 2, dated November 2011; and Erratum to DAHER-SOCATA TBM Aircraft Mandatory Service Bulletin SB 70 194–32, Amendment 2, dated December 2011, for related information.

(i) Material Incorporated by Reference

(1) You must use DAHER-SOCATA TBM Aircraft Mandatory Service Bulletin SB 70–194–32, Amendment 2, dated November 2011, including Erratum, dated December 2011, to do the actions required by this AD, unless the AD specifies otherwise. The Director of the Federal Register approved the incorporation by reference (IBR) under 5 U.S.C. 552(a) and 1 CFR part 51:

(2) For service information identified in this AD, contact SOCATA—Direction des Services, 65921 Tarbes Cedex 9, France; telephone: +33 (0)5 62 41 73 00; fax: +33 (0)5 62 41 7654; or in the United States contact SOCATA North America, Inc., North Perry Airport, 7501 South Airport Road, Pembroke Pines, Florida 33023; telephone: (954) 893–1400; fax: (954) 964–4141; email: *mysocata@socata.daher.com;* Internet: *www.socatanorthamerica.com.*

(3) You may review copies of the service information at the FAA, Small Airplane Directorate, 901 Locust, Kansas City, Missouri 64106. For information on the availability of this material at the FAA, call (816) 329–4148.

(4) You may also review copies of the service information that is incorporated by reference at the National Archives and Records Administration (NARA). For information on the availability of this material at an NARA facility, call 202–741–6030, or go to *http://www.archives.gov/federal_register/code_of_federal_regulations/ibr_locations.html.*

Issued in Kansas City, Missouri, on May 17, 2012.

Earl Lawrence,

Manager, Small Airplane Directorate, Aircraft Certification Service.

[FR Doc. 2012–12649 Filed 6–15–12; 8:45 am]

BILLING CODE 4910–13–P

DEPARTMENT OF TRANSPORTATION

Federal Aviation Administration

14 CFR Part 39

[Docket No. FAA–2012–0188; Directorate Identifier 2011–NM–120–AD; Amendment 39–17079; AD 2012–11–15]

RIN 2120–AA64

Airworthiness Directives; BAE SYSTEMS (Operations) Limited Airplanes

AGENCY: Federal Aviation Administration (FAA), Department of Transportation (DOT).

ACTION: Final rule.

SUMMARY: We are adopting a new airworthiness directive (AD) for all BAE SYSTEMS (Operations) Limited Model 4101 airplanes. This AD was prompted by reports of cracking found in the wing rear spar. This AD requires a one-time detailed inspection for cracks, corrosion, and other defects of the rear face of the wing rear spar, and repair if necessary. We are issuing this AD to detect and correct cracking in the rear spar, which could propagate to a critical length, possibly affecting the structural integrity of the area and resulting in a fuel tank rupture, with consequent damage to the airplane and possible injury to its occupants.

DATES: This AD becomes effective July 23, 2012.

The Director of the Federal Register approved the incorporation by reference of certain publications listed in this AD as of July 23, 2012.

ADDRESSES: You may examine the AD docket on the Internet at *http://www.regulations.gov* or in person at the U.S. Department of Transportation, Docket Operations, M–30, West Building Ground Floor, Room W12–140, 1200 New Jersey Avenue SE., Washington, DC.

FOR FURTHER INFORMATION CONTACT: Todd Thompson, Aerospace Engineer,

International Branch, ANM–116, Transport Airplane Directorate, FAA, 1601 Lind Avenue SW., Renton, Washington 98057–3356; telephone 425–227–1175; fax 425–227–1149.

SUPPLEMENTARY INFORMATION:

Discussion

We issued a notice of proposed rulemaking (NPRM) to amend 14 CFR part 39 to include an AD that would apply to the specified products. That NPRM was published in the **Federal Register** on March 6, 2012 (77 FR 13228). That NPRM proposed to correct an unsafe condition for the specified products. The MCAI states:

> Four cracks were found on a wing rear spar by an operator during a fuel leak investigation. The cracks were located between ribs 6 and 7, immediately inboard of the inboard engine rib. The cracks initiated at adjacent fastener bores in the rear spar upper boom and progressed downwards, diagonally, into the rear spar web.
>
> Such cracking in the rear spar, if not detected and corrected, could propagate to a critical length, possibly affecting the structural integrity of the area and/or resulting in a fuel tank rupture, and consequent damage to the aeroplane and injury to its occupants.
>
> For the reasons described above, this [EASA] AD requires a one-time [detailed] inspection [for cracks, corrosion, and other defects] of the rear face of the wing rear spar and the accomplishment of the associated corrective actions [i.e., repair], depending on findings.

You may obtain further information by examining the MCAI in the AD docket.

Comments

We gave the public the opportunity to participate in developing this AD. We received no comments on the NPRM (77 FR 13228, March 6, 2012) or on the determination of the cost to the public.

Conclusion

We reviewed the available data and determined that air safety and the public interest require adopting the AD as proposed, except for minor editorial changes. We have determined that these minor changes:

- Are consistent with the intent that was proposed in the NPRM (77 FR 13228, March 6, 2012) for correcting the unsafe condition; and
- Do not add any additional burden upon the public than was already proposed in the NPRM (77 FR 13228, March 6, 2012).

Costs of Compliance

We estimate that this AD will affect 3 products of U.S. registry. We also estimate that it will take about 25 work-hours per product to comply with the basic requirements of this AD. The average labor rate is $85 per work-hour. Based on these figures, we estimate the cost of this AD to the U.S. operators to be $6,375, or $2,125 per product.

We have received no definitive data that would enable us to provide a cost estimates for the on-condition actions (repairing cracks, corrosion, and defects) specified in this AD.

Authority for This Rulemaking

Title 49 of the United States Code specifies the FAA's authority to issue rules on aviation safety. Subtitle I, section 106, describes the authority of the FAA Administrator. ''Subtitle VII: Aviation Programs,'' describes in more detail the scope of the Agency's authority.

We are issuing this rulemaking under the authority described in ''Subtitle VII, Part A, Subpart III, Section 44701: General requirements.'' Under that section, Congress charges the FAA with promoting safe flight of civil aircraft in air commerce by prescribing regulations for practices, methods, and procedures the Administrator finds necessary for safety in air commerce. This regulation is within the scope of that authority because it addresses an unsafe condition that is likely to exist or develop on products identified in this rulemaking action.

Regulatory Findings

We determined that this AD will not have federalism implications under Executive Order 13132. This AD will not have a substantial direct effect on the States, on the relationship between the national government and the States, or on the distribution of power and responsibilities among the various levels of government.

For the reasons discussed above, I certify that this AD:

1. Is not a ''significant regulatory action'' under Executive Order 12866;
2. Is not a ''significant rule'' under the DOT Regulatory Policies and Procedures (44 FR 11034, February 26, 1979);
3. Will not affect intrastate aviation in Alaska; and
4. Will not have a significant economic impact, positive or negative, on a substantial number of small entities under the criteria of the Regulatory Flexibility Act.

We prepared a regulatory evaluation of the estimated costs to comply with this AD and placed it in the AD docket.

Examining the AD Docket

You may examine the AD docket on the Internet at *http://www.regulations.gov;* or in person at the Docket Operations office between 9 a.m. and 5 p.m., Monday through Friday, except Federal holidays. The AD docket contains the NPRM (77 FR 13228, March 6, 2012), the regulatory evaluation, any comments received, and other information. The street address for the Docket Operations office (telephone (800) 647–5527) is in the **ADDRESSES** section. Comments will be available in the AD docket shortly after receipt.

List of Subjects in 14 CFR Part 39

Air transportation, Aircraft, Aviation safety, Incorporation by reference, Safety.

Adoption of the Amendment

Accordingly, under the authority delegated to me by the Administrator, the FAA amends 14 CFR part 39 as follows:

PART 39—AIRWORTHINESS DIRECTIVES

■ 1. The authority citation for part 39 continues to read as follows:

Authority: 49 U.S.C. 106(g), 40113, 44701.

§ 39.13 [Amended]

■ 2. The FAA amends § 39.13 by adding the following new AD:

2012–11–15 BAE SYSTEMS (Operations) Limited: Amendment 39–17079. Docket No. FAA–2012–0188; Directorate Identifier 2011–NM–120–AD.

(a) Effective Date

This airworthiness directive (AD) becomes effective July 23, 2012.

(b) Affected ADs

None.

(c) Applicability

This AD applies to BAE SYSTEMS (Operations) Limited Model 4101 airplanes, certificated in any category, all models, and all serial numbers.

(d) Subject

Air Transport Association (ATA) of America Code 57: Wings.

(e) Reason

This AD was prompted by reports of cracking found in the wing rear spar. We are issuing this AD to detect and correct cracking in the rear spar, which could propagate to a critical length, possibly affecting the structural integrity of the area and resulting in a fuel tank rupture, with consequent damage to the airplane and possible injury to its occupants.

(f) Compliance

You are responsible for having the actions required by this AD performed within the compliance times specified, unless the actions have already been done.

(g) Detailed Inspection and Repair

Within 300 flight hours after the effective date of this AD, or before further flight if a

fuel leak is detected in the vicinity of a wing rear spar, whichever occurs first: Do a detailed inspection for cracks, corrosion, and other defects (defects include scratches, dents, holes, damage to fastener holes, or damage to surface protection and finish) of the rear face of the wing rear spars, in accordance with the Accomplishment Instructions of BAE SYSTEMS (Operations) Limited Alert Service Bulletin J41–A57–029, dated May 6, 2011.

(1) If any cracking, corrosion, or other defect is found to be within the criteria defined in Subject 57–00–00, Wings General, of Chapter 57, Wings, of the Jetstream Series 4100 Structural Repair Manual, Volume 1, Revision 30, dated April 15, 2007: Before further flight, repair the damage, in accordance with the repair instructions specified in Subject 57–00–00, Wings General, of Chapter 57, Wings, of the Jetstream Series 4100 Structural Repair Manual, Volume 1, Revision 30, dated April 15, 2007.

(2) If any cracking, corrosion, or other defect is found exceeding the criteria as specified in Subject 57–00–00, Wings General, of Chapter 57, Wings, of the Jetstream Series 4100 Structural Repair Manual, Volume 1, Revision 30, dated April 15, 2007: Before further flight, repair the condition, in accordance with a method approved by the Manager, International Branch, ANM–116, Transport Airplane Directorate, FAA, or EASA (or its delegated agent).

(h) Reporting

Submit a report of the findings of the inspection required by paragraph (g) of this AD, including a report of no defects, to BAE SYSTEMS (Operations) Limited, Customer Information Department, Prestwick International Airport, Ayrshire, KA9 2RW, Scotland, United Kingdom; telephone +44 1292 675207; fax +44 1292 675704; email *RApublications@baesystems.com;* Internet *http://www.baesystems.com/Businesses/RegionalAircraft/index.htm,* at the applicable time specified in paragraph (h)(1) or (h)(2) of this AD.

(1) If the inspection was done on or after the effective date of this AD: Submit the report within 30 days after the inspection.

(2) If the inspection was done before the effective date of this AD: Submit the report within 30 days after the effective date of this AD.

(i) Other FAA AD Provisions

The following provisions also apply to this AD:

(1) *Alternative Methods of Compliance (AMOCs):* The Manager, International Branch, ANM–116, Transport Airplane Directorate, FAA, has the authority to approve AMOCs for this AD, if requested using the procedures found in 14 CFR 39.19. In accordance with 14 CFR 39.19, send your request to your principal inspector or local Flight Standards District Office, as appropriate. If sending information directly to the International Branch, send it to ATTN: Todd Thompson, Aerospace Engineer, International Branch, ANM–116, Transport Airplane Directorate, FAA, 1601 Lind Avenue SW., Renton, Washington 98057–3356; telephone 425–227–1175; fax 425–227–1149. Information may be emailed to: *9-ANM-116-AMOC-REQUESTS@faa.gov.* Before using any approved AMOC, notify your appropriate principal inspector, or lacking a principal inspector, the manager of the local flight standards district office/certificate holding district office. The AMOC approval letter must specifically reference this AD.

(2) *Airworthy Product:* For any requirement in this AD to obtain corrective actions from a manufacturer or other source, use these actions if they are FAA-approved. Corrective actions are considered FAA-approved if they are approved by the State of Design Authority (or their delegated agent). You are required to assure the product is airworthy before it is returned to service.

(3) *Reporting Requirements:* A federal agency may not conduct or sponsor, and a person is not required to respond to, nor shall a person be subject to a penalty for failure to comply with a collection of information subject to the requirements of the Paperwork Reduction Act unless that collection of information displays a current valid OMB Control Number. The OMB Control Number for this information collection is 2120–0056. Public reporting for this collection of information is estimated to be approximately 5 minutes per response, including the time for reviewing instructions, completing and reviewing the collection of information. All responses to this collection of information are mandatory. Comments concerning the accuracy of this burden and suggestions for reducing the burden should be directed to the FAA at: 800 Independence Ave. SW., Washington, DC 20591, Attn: Information Collection Clearance Officer, AES–200.

(j) Related Information

Refer to MCAI EASA Airworthiness Directive 2011–0096, dated May 25, 2011, and the service information specified in paragraphs (j)(1) and (j)(2) of this AD, for related information.

(1) BAE SYSTEMS (Operations) Limited Alert Service Bulletin J41–A57–029, dated May 6, 2011.

(2) Subject 57–00–00, Wings General, of Chapter 57, Wings, of the Jetstream Series 4100 Structural Repair Manual, Volume 1, Revision 30, dated April 15, 2007.

(k) Material Incorporated by Reference

(1) The Director of the Federal Register approved the incorporation by reference (IBR) of the following service information under 5 U.S.C. 552(a) and 1 CFR part 51.

(2) You must use the following service information to do the actions required by this AD, unless the AD specifies otherwise.

(i) BAE SYSTEMS (Operations) Limited Alert Service Bulletin J41–A57–029, dated May 6, 2011.

(ii) Subject 57–00–00, Wings General, of Chapter 57, Wings, of the Jetstream Series 4100 Structural Repair Manual, Volume 1, Revision 30, dated April 15, 2007. The revision level and date of this document are identified only in the Record of Revisions section of this document.

(3) For service information identified in this AD, contact BAE SYSTEMS (Operations) Limited, Customer Information Department, Prestwick International Airport, Ayrshire, KA9 2RW, Scotland, United Kingdom; telephone +44 1292 675207; fax +44 1292 675704; email *RApublications@baesystems.com;* Internet *http://www.baesystems.com/Businesses/RegionalAircraft/index.htm.*

(4) You may review copies of the service information at the FAA, Transport Airplane Directorate, 1601 Lind Avenue SW., Renton, Washington. For information on the availability of this material at the FAA, call 425–227–1221.

(5) You may also review copies of the service information that is incorporated by reference at the National Archives and Records Administration (NARA). For information on the availability of this material at an NARA facility, call 202–741–6030, or go to *http://www.archives.gov/federal_register/code_of_federal_regulations/ibr_locations.html.*

Issued in Renton, Washington, on March 31, 2012.

Michael Kaszycki,

Acting Manager, Transport Airplane Directorate, Aircraft Certification Service.

[FR Doc. 2012–13800 Filed 6–15–12; 8:45 am]

BILLING CODE 4910–13–P

DEPARTMENT OF TRANSPORTATION

Federal Aviation Administration

14 CFR Part 39

[Docket No. FAA–2012–0293; Directorate Identifier 2012–NM–034–AD; Amendment 39–17081; AD 2012–12–02]

RIN 2120–AA64

Airworthiness Directives; Bombardier, Inc. Airplanes

AGENCY: Federal Aviation Administration (FAA), Department of Transportation (DOT).

ACTION: Final rule.

SUMMARY: We are adopting a new airworthiness directive (AD) for certain Bombardier, Inc. Model CL–600–2C10 (Regional Jet Series 700, 701, & 702) airplanes, Model CL–600–2D15 (Regional Jet Series 705) airplanes, and Model CL–600–2D24 (Regional Jet Series 900) airplanes. This AD was prompted by reports of a bleed air leak from the high pressure ducts which was not immediately detected by the bleed leak detection system. This AD requires installing new sensing elements in the main landing gear wheel well and the overwing area, protective blankets on the upper surface of the wing box and fuel tubes, and protective shields on the rudder quadrant support-beam in the aft equipment compartment. We are issuing this AD to prevent an undetected bleed

air leak which can cause loss of rudder control, can lead to degradation of structural integrity, and could be a potential heat source that can lead to fuel being ignited.

DATES: This AD becomes effective July 23, 2012.

The Director of the Federal Register approved the incorporation by reference of certain publications listed in this AD as of July 23, 2012.

ADDRESSES: You may examine the AD docket on the Internet at *http://www.regulations.gov* or in person at the U.S. Department of Transportation, Docket Operations, M–30, West Building Ground Floor, Room W12–140, 1200 New Jersey Avenue SE., Washington, DC.

FOR FURTHER INFORMATION CONTACT: Cesar Gomez, Aerospace Engineer, Airframe and Mechanical Systems Branch, ANE–171, FAA, New York Aircraft Certification Office, 1600 Stewart Avenue, Suite 410, Westbury, New York 11590; telephone (516) 228–7318; fax (516) 794–5531.

SUPPLEMENTARY INFORMATION:

Discussion

We issued a notice of proposed rulemaking (NPRM) to amend 14 CFR part 39 to include an AD that would apply to the specified products. That NPRM published in the **Federal Register** on March 21, 2012 (77 FR 16490). That NPRM proposed to correct an unsafe condition for the specified products. The MCAI states:

> There have been multiple events reported where a bleed air leak from the high pressure ducts was not immediately detected by the Bleed Leak Detection System (BLDS).
>
> An investigation revealed that if a bleed air leak develops due to a cracked or ruptured duct, the duct shroud may not channel sufficient bleed air to the sensing loop elements to enable an automatic shutdown of the bleed air system. The inability to detect a bleed air leak could result in the rudder quadrant bracket, pressure floor, pressure floor beam, fuel vent boot or fuel tubes being exposed to high temperatures. This could potentially lead to the loss of rudder control, degrade the structural integrity of primary structure or fuel ignition.
>
> This [Canadian] Airworthiness Directive (AD) mandates the installation of newly designed sensing elements in the main landing gear wheel well and the overwing area, protective blankets on the upper surface of the wing box and fuel tubes, as well as protective shields on the rudder quadrant support-beam in the aft equipment compartment.

You may obtain further information by examining the MCAI in the AD docket.

Comments

We gave the public the opportunity to participate in developing this AD. We received no comments on the NPRM (77 FR 16490, March 21, 2012) or on the determination of the cost to the public.

Conclusion

We reviewed the available data and determined that air safety and the public interest require adopting the AD as proposed.

Costs of Compliance

We estimate that this AD will affect 409 products of U.S. registry. We also estimate that it will take about 78 work-hours per product to comply with the basic requirements of this AD. The average labor rate is $85 per work-hour. Required parts will cost about $21,353 per product. Where the service information lists required parts costs that are covered under warranty, we have assumed that there will be no charge for these parts. As we do not control warranty coverage for affected parties, some parties may incur costs higher than estimated here. Based on these figures, we estimate the cost of this AD to the U.S. operators to be $11,445,047, or $27,983 per product.

Authority for This Rulemaking

Title 49 of the United States Code specifies the FAA's authority to issue rules on aviation safety. Subtitle I, section 106, describes the authority of the FAA Administrator. ''Subtitle VII: Aviation Programs,'' describes in more detail the scope of the Agency's authority.

We are issuing this rulemaking under the authority described in ''Subtitle VII, Part A, Subpart III, Section 44701: General requirements.'' Under that section, Congress charges the FAA with promoting safe flight of civil aircraft in air commerce by prescribing regulations for practices, methods, and procedures the Administrator finds necessary for safety in air commerce. This regulation is within the scope of that authority because it addresses an unsafe condition that is likely to exist or develop on products identified in this rulemaking action.

Regulatory Findings

We determined that this AD will not have federalism implications under Executive Order 13132. This AD will not have a substantial direct effect on the States, on the relationship between the national government and the States, or on the distribution of power and responsibilities among the various levels of government.

For the reasons discussed above, I certify that this AD:

1. Is not a ''significant regulatory action'' under Executive Order 12866;
2. Is not a ''significant rule'' under the DOT Regulatory Policies and Procedures (44 FR 11034, February 26, 1979);
3. Will not affect intrastate aviation in Alaska; and
4. Will not have a significant economic impact, positive or negative, on a substantial number of small entities under the criteria of the Regulatory Flexibility Act.

We prepared a regulatory evaluation of the estimated costs to comply with this AD and placed it in the AD docket.

Examining the AD Docket

You may examine the AD docket on the Internet at *http://www.regulations.gov;* or in person at the Docket Operations office between 9 a.m. and 5 p.m., Monday through Friday, except Federal holidays. The AD docket contains the NPRM (77 FR 16490, March 21, 2012), the regulatory evaluation, any comments received, and other information. The street address for the Docket Operations office (telephone (800) 647–5527) is in the **ADDRESSES** section. Comments will be available in the AD docket shortly after receipt.

List of Subjects in 14 CFR Part 39

Air transportation, Aircraft, Aviation safety, Incorporation by reference, Safety.

Adoption of the Amendment

Accordingly, under the authority delegated to me by the Administrator, the FAA amends 14 CFR part 39 as follows:

PART 39—AIRWORTHINESS DIRECTIVES

■ 1. The authority citation for part 39 continues to read as follows:

Authority: 49 U.S.C. 106(g), 40113, 44701.

§ 39.13 [Amended]

■ 2. The FAA amends § 39.13 by adding the following new AD:

2012–12–02 Bombardier, Inc.: Amendment 39–17081. Docket No. FAA–2012–0293; Directorate Identifier 2012–NM–034–AD.

(a) Effective Date

This airworthiness directive (AD) becomes effective July 23, 2012.

(b) Affected ADs

None.

(c) Applicability

This AD applies to the airplanes specified in paragraphs (c)(1) and (c)(2) of this AD, certificated in any category.

(1) Bombardier, Inc. Model CL–600–2C10 (Regional Jet Series 700, 701, & 702) airplanes, serial numbers 10003 through 10331 inclusive.

(2) Bombardier, Inc. Model CL–600–2D15 (Regional Jet Series 705) and CL–600–2D24 (Regional Jet Series 900) airplanes, serial numbers 15001 through 15279 inclusive.

(d) Subject

Air Transport Association (ATA) of America Code 36: Pneumatic.

(e) Reason

This AD was prompted by reports of a bleed air leak from the high pressure ducts which was not immediately detected by the bleed leak detection system. We are issuing this AD to prevent an undetected bleed air leak which can cause loss of rudder control, can lead to degradation of structural integrity, and could be a potential heat source that can lead to fuel being ignited.

(f) Compliance

You are responsible for having the actions required by this AD performed within the compliance times specified, unless the actions have already been done.

(g) Install Protective Shields

For Model CL–600–2C10 airplanes having serial numbers 10003 through 10326 inclusive, and Model CL–600–2D15 and CL–600–2D24 airplanes having serial numbers 15001 through 15267 inclusive: Within 6,600 flight hours or 24 months after the effective date of this AD, whichever occurs first, install protective shields on the rudder quadrant support-beam in the aft equipment compartment, in accordance with the Accomplishment Instructions of Bombardier Service Bulletin 670BA–36–014, Revision A, dated October 11, 2011.

(h) Install Protective Blankets and Sensing Elements

For Model CL–600–2C10 airplanes having serial numbers 10003 through 10331 inclusive and Models CL–600–2D15 and CL–600–2D24 airplanes having serial numbers 15001 through 15279 inclusive: Within 6,600 flight hours or 24 months after the effective date of this AD, whichever occurs first, install protective blankets on the upper surface of the wing box and fuel components, and install new sensing elements in the wheel well of the main landing gear and the overwing area, in accordance with the Accomplishment Instructions of Bombardier Service Bulletin 670BA–36–016, Revision A, dated October 11, 2011.

(i) Credit for Previous Actions

This paragraph provides credit for installations, required by paragraphs (g) and (h) of this AD, if those actions were performed before the effective date of this AD using Bombardier Service Bulletin 670BA–36–014 or 670BA–36–016, both dated April 7, 2011, as applicable.

(j) Other FAA AD Provisions

The following provisions also apply to this AD:

(1) *Alternative Methods of Compliance (AMOCs):* The Manager, New York Aircraft Certification Office, ANE–170, FAA, has the authority to approve AMOCs for this AD, if requested using the procedures found in 14 CFR 39.19. In accordance with 14 CFR 39.19, send your request to your principal inspector or local Flight Standards District Office, as appropriate. If sending information directly to the ACO, send it to ATTN: Program Manager, Continuing Operational Safety, FAA, New York ACO, 1600 Stewart Avenue, Suite 410, Westbury, New York 11590; telephone 516–228–7300; fax 516–794–5531. Before using any approved AMOC, notify your appropriate principal inspector, or lacking a principal inspector, the manager of the local flight standards district office/certificate holding district office. The AMOC approval letter must specifically reference this AD.

(2) *Airworthy Product:* For any requirement in this AD to obtain corrective actions from a manufacturer or other source, use these actions if they are FAA-approved. Corrective actions are considered FAA-approved if they are approved by the State of Design Authority (or their delegated agent). You are required to assure the product is airworthy before it is returned to service.

(k) Related Information

Refer to MCAI Canadian Airworthiness Directive CF–2012–06, dated January 26, 2012, and the service bulletins specified in paragraphs (k)(1) and (k)(2) of this AD, for related information.

(1) Bombardier Service Bulletin 670BA–36–014, Revision A, dated October 11, 2011.

(2) Bombardier Service Bulletin 670BA–36–016, Revision A, dated October 11, 2011.

(l) Material Incorporated by Reference

(1) The Director of the Federal Register approved the incorporation by reference (IBR) of the following service information under 5 U.S.C. 552(a) and 1 CFR part 51.

(2) You must use the following service information to do the actions required by this AD, unless the AD specifies otherwise.

(i) Bombardier Service Bulletin 670BA–36–014, Revision A, dated October 11, 2011.

(ii) Bombardier Service Bulletin 670BA–36–016, Revision A, dated October 11, 2011.

(3) For service information identified in this AD, contact Bombardier, Inc., 400 Côte-Vertu Road West, Dorval, Québec H4S 1Y9, Canada; telephone 514–855–5000; fax 514–855–7401; email *thd.crj@aero.bombardier.com;* Internet *http://www.bombardier.com.*

(4) You may review copies of the service information at the FAA, Transport Airplane Directorate, 1601 Lind Avenue SW., Renton, Washington. For information on the availability of this material at the FAA, call 425–227–1221.

(5) You may also review copies of the service information that is incorporated by reference at the National Archives and Records Administration (NARA). For information on the availability of this material at an NARA facility, call 202–741–6030, or go to *http://www.archives.gov/federal_register/code_of_federal_regulations/ibr_locations.html.*

Issued in Renton, Washington, on May 31, 2012.

Michael Kaszycki,

Acting Manager, Transport Airplane Directorate, Aircraft Certification Service.

[FR Doc. 2012–14042 Filed 6–15–12; 8:45 am]

BILLING CODE 4910–13–P

DEPARTMENT OF TRANSPORTATION

Federal Aviation Administration

14 CFR Part 39

[Docket No. FAA–2012–0562; Directorate Identifier 2012–SW–038–AD; Amendment 39–17068; AD 2012–11–05]

RIN 2120–AA64

Airworthiness Directives; Enstrom Helicopter Corporation Helicopters

AGENCY: Federal Aviation Administration (FAA), Department of Transportation (DOT).

ACTION: Final rule; request for comments.

SUMMARY: We are superseding an existing airworthiness directive (AD) for Enstrom Helicopter Corporation (Enstrom) Model F–28C, F–28C–2, F–28F, 280C, 280F, 280FX, TH–28, 480, and 480B helicopters to add another trim relay to the applicability and to revise the modification instructions. This AD is prompted by the discovery that another part-numbered trim relay, inadvertently omitted from the current AD, may contain the same unsafe condition. These actions are intended to prevent failure of the cyclic trim system and subsequent loss of control of the helicopter.

DATES: This AD becomes effective July 3, 2012.

The Director of the Federal Register approved the incorporation by reference of a certain publication listed in this AD as of July 3, 2012.

The Director of the Federal Register approved the incorporation by reference of a certain other publication listed in this AD as of January 23, 2012 (77 FR 729, January 6, 2012).

We must receive comments on this AD by August 17, 2012.

ADDRESSES: You may send comments by any of the following methods:

- *Federal eRulemaking Docket:* Go to *http://www.regulations.gov.* Follow the online instructions for sending your comments electronically.
- *Fax:* 202–493–2251.
- *Mail:* Send comments to the U.S. Department of Transportation, Docket Operations, M–30, West Building Ground Floor, Room W12–140, 1200

New Jersey Avenue SE., Washington, DC 20590–0001.

• *Hand Delivery:* Deliver to the ''Mail'' address between 9 a.m. and 5 p.m., Monday through Friday, except Federal holidays.

Examining the AD Docket: You may examine the AD docket on the Internet at *http://www.regulations.gov* or in person at the Docket Operations Office between 9 a.m. and 5 p.m., Monday through Friday, except Federal holidays. The AD docket contains this AD, the economic evaluation, any comments received, and other information. The street address for the Docket Operations Office (telephone 800–647–5527) is in the **ADDRESSES** section. Comments will be available in the AD docket shortly after receipt.

For service information identified in this AD, contact Enstrom Helicopter Corporation, 2209 22nd St., Menominee, Michigan, 49858–0490; telephone: 906–863–1200; email: *customerservice@enstromhelicopter.com;* Web site: *http://www.enstromhelicopter.com/enstrom_new/enstrom_support_tec.html.* You may review a copy of the referenced service information at the FAA, Office of the Regional Counsel, Southwest Region, 2601 Meacham Blvd., Room 663, Fort Worth, Texas 76137.

FOR FURTHER INFORMATION CONTACT: Gregory J. Michalik, Enstrom Program Manager, FAA, Chicago Aircraft Certification Office, 2300 East Devon Avenue, Room 107, Des Plaines, Illinois, 60018; telephone (847) 294–7135; email: *gregory.michalik@faa.gov.*

SUPPLEMENTARY INFORMATION:

Comments Invited

This AD is a final rule that involves requirements affecting flight safety, and we did not provide you with notice and an opportunity to provide your comments prior to it becoming effective. However, we invite you to participate in this rulemaking by submitting written comments, data, or views. We also invite comments relating to the economic, environmental, energy, or federalism impacts that resulted from adopting this AD. The most helpful comments reference a specific portion of the AD, explain the reason for any recommended change, and include supporting data. To ensure the docket does not contain duplicate comments, commenters should send only one copy of written comments, or if comments are filed electronically, commenters should submit them only one time. We will file in the docket all comments that we receive, as well as a report summarizing each substantive public contact with FAA personnel concerning this rulemaking during the comment period. We will consider all the comments we receive and may conduct additional rulemaking based on those comments.

Discussion

On December 14, 2011, we issued AD 2011–26–10, amendment 39–16900 (77 FR 729, January 6, 2012) for Enstrom Model F–28C, F–28C–2, F–28F, 280C, 280F, 280FX, TH–28, 480, and 480B helicopters with a trim relay, part-number (P/N) KUP14D55–472, M83536/10–015M, or M83536/10–024M. That AD requires modifying the lateral and longitudinal trim actuator assemblies by replacing the actuator and limit switch bracket to provide a positive stop for the trim actuator. In the event of a trim actuator runaway, the new bracket will stop the actuator, causing the circuit breaker to trip before any significant loss of control occurs. After the trim actuator assemblies are modified, that AD requires performing operational (ground) and flight tests to determine that the trim relay is working correctly. That AD was prompted by reports of 4 failures in the cyclic trim system in the field, 2 that occurred on the Enstrom Model 480B helicopter and 2 that occurred on the Enstrom Model F28 helicopter. These failures resulted in reduced controllability of the helicopter. We issued that AD to prevent failure of the cyclic trim system and subsequent loss of control of the helicopter.

Comments

Since we issued immediately adopted AD 2011–26–10, we received one comment from Enstrom, the manufacturer, and Revision 4 to Enstrom Service Directive Bulletin No. 0110, dated January 23, 2012 (SDB 0110), for Model F–28C, F–28C–2, F–28F, 280C, 280F, and 280FX helicopters. In its comment, the manufacturer stated that the list of affected part numbers for the F–28 series and 280 series helicopter should include P/N KUP14D55–24 and that this P/N was erroneously left off of Enstrom's original Service Directive Bulletin. It stated that the same safety concerns also exist with this relay and that adding this P/N will not affect the cost analysis or fleet size as these aircraft were included in the initial calculations.

We agree with the commenter that the additional part numbered relay contained in Enstrom SDB 0110 should be added to the applicability section of the AD because it may contain the same unsafe condition. Also, we agree that the revised compliance instructions contained in SDB 0110 should be required.

FAA's Determination

We are issuing this AD because we evaluated all the relevant information, including the comment received and the revised service information, and determined the unsafe condition described previously is likely to exist or develop in other helicopters of these same type designs.

Related Service Information

We reviewed Enstrom SDB No. T–039, Revision 3, dated July 6, 2011 (SDB T–039), for Model TH–28, 480, and 480B helicopters and Enstrom SDB 0110, for Model F–28C, F–28C–2, F–28F, 280C, 280F, and 280FX helicopters. SDB T–039 specifies, for helicopters with a trim relay, P/N M83536/10–024M, procedures for modifying the lateral and longitudinal trim actuator assembly using the cyclic trim assembly kit (modification kit), P/N 4230045–1, and specifies performing an operational check and flight test to determine if the trim is operating correctly after the modification. SDB 0110 specifies, for helicopters with a trim relay, P/N KUP14D55–24, KUP14D55–472, M83536/10–015M, or M83536/10–024M, procedures for modifying the lateral and longitudinal trim actuator assembly using the modification kit, P/N 28–01063–1, and specifies performing an operational check and flight test to determine if the trim is operating correctly after the modification. The SDBs state that the modification kits contain the upgraded bracket.

AD Requirements

In addition to those part-numbered trim relays contained in the applicability section of the current AD 2011–26–10, this AD adds trim relay P/N KUP14D55–24. Also, this AD adopts the revised modification instructions for the Model F–28C, F–28C–2, F–28F, 280C, 280F, and 280FX helicopters contained in SDB 0110. Otherwise, this AD retains most of the requirements of AD 2011–26–10, which requires modifying the lateral and longitudinal trim actuator assembly, using modification kit, P/N 28–01063–1, for the Model F–28C, F–28C–2, F–28F, 280C, 280F, and 280FX helicopters and modification kit, P/N 4230045–1, for the Model TH–28, 480, and 480B helicopters, and verifying that the modification has been completed properly by performing an operational and flight test after the modification is complete.

The actions required by this AD are to be accomplished by following specified

portions of the SDBs described previously.

Differences Between This AD and the Service Information

The SDBs specify, before further flight, to insert a special addendum into the Emergency Procedures section of the Flight Manual, and this AD does not require this action.

Costs of Compliance

We estimate that this AD will affect 207 helicopters of U.S. Registry. We estimate that operators may incur the following costs in order to comply with this AD. For Model 480, 480B, and TH–28, modifying the actuator assemblies will require 8 work hours at a cost of $85 per hour and parts will cost $327; the cost per helicopter will be $1,007. For Model 280C, 280F, 280FX, F–28C, F–28C–2, and F–28F, modifying the actuator assemblies will require 8 work hours at a cost of $85 per hour; parts will cost $383; and the cost per helicopter will be $1,063.

FAA's Justification and Determination of the Effective Date

Providing an opportunity for public comments prior to adopting these AD requirements would delay implementing the safety actions needed to correct this known unsafe condition. Therefore, we find that the risk to the flying public justifies waiving notice and comment prior to the adoption of this rule because the required corrective actions must be accomplished within 5 hours time-in-service, a very short time period based on the *average* flight-hour utilization rate of these helicopters.

Since an unsafe condition exists that requires the immediate adoption of this AD, we determined that notice and opportunity for public comment before issuing this AD are impracticable and contrary to the public interest and that good cause exists for making this amendment effective in less than 30 days.

Authority for This Rulemaking

Title 49 of the United States Code specifies the FAA's authority to issue rules on aviation safety. Subtitle I, section 106, describes the authority of the FAA Administrator. ''Subtitle VII: Aviation Programs,'' describes in more detail the scope of the Agency's authority.

We are issuing this rulemaking under the authority described in ''Subtitle VII, Part A, Subpart III, Section 44701: General requirements.'' Under that section, Congress charges the FAA with promoting safe flight of civil aircraft in air commerce by prescribing regulations for practices, methods, and procedures the Administrator finds necessary for safety in air commerce. This regulation is within the scope of that authority because it addresses an unsafe condition that is likely to exist or develop on products identified in this rulemaking action.

Regulatory Findings

We determined that this AD will not have federalism implications under Executive Order 13132. This AD will not have a substantial direct effect on the States, on the relationship between the national Government and the States, or on the distribution of power and responsibilities among the various levels of government.

For the reasons discussed, I certify that this AD:

1. Is not a ''significant regulatory action'' under Executive Order 12866;
2. Is not a ''significant rule'' under DOT Regulatory Policies and Procedures (44 FR 11034, February 26, 1979);
3. Will not affect intrastate aviation in Alaska to the extent that it justifies making a regulatory distinction; and
4. Will not have a significant economic impact, positive or negative, on a substantial number of small entities under the criteria of the Regulatory Flexibility Act.

We prepared an economic evaluation of the estimated costs to comply with this AD and placed it in the AD docket.

List of Subjects in 14 CFR Part 39

Air transportation, Aircraft, Aviation safety, Incorporation by reference, Safety.

Adoption of the Amendment

Accordingly, under the authority delegated to me by the Administrator, the FAA amends 14 CFR part 39 as follows:

PART 39—AIRWORTHINESS DIRECTIVES

■ 1. The authority citation for part 39 continues to read as follows:

Authority: 49 U.S.C. 106(g), 40113, 44701.

§ 39.13 [Amended]

■ 2. The FAA amends § 39.13 by removing Amendment 39–16900 (77 FR 729, January 6, 2012), and adding the following new airworthiness directive (AD):

2012–11–05 Enstrom Helicopter Corporation: Amendment 39–17068; Docket No. FAA–2012–0562; Directorate Identifier 2012–SW–038–AD.

(a) Applicability

This AD applies to the Enstrom Model F–28C, F–28C–2, F–28F, 280C, 280F, 280FX, TH–28, 480, and 480B helicopters with a trim relay, part-number (P/N) KUP14D55–24, KUP14D55–472, M83536/10–015M, or M83536/10–024M, certificated in any category.

Note to paragraph (a) of this AD: This AD does not apply to the specified helicopters with a reversible trim motor, P/N 28–16621 (Ford Motor Company C1AZ–14553A) or P/N AD1R–10 (Signal Electric).

(b) Unsafe Condition

This AD defines the unsafe condition as a failure of a trim relay in the cyclic trim system. This condition could result in reduced controllability of the helicopter and subsequent loss of control of the helicopter.

(c) Other Affected ADs

This AD supersedes AD 2011–26–10, Amendment 39–16900 (77 FR 729, January 6, 2012).

(d) Effective Date

This AD becomes effective July 3, 2012.

(e) Compliance

You are responsible for performing each action required by this AD within the specified compliance time unless it has already been accomplished prior to that time.

(f) Required Actions

Within 5 hours time-in-service (TIS) or at the next annual or 100 hour TIS inspection, whichever occurs first:

(1) For the Enstrom Model F–28C, F–28C–2, F–28F, 280C, 280F, and 280FX helicopters, modify the lateral and longitudinal trim actuator assemblies using the cyclic trim assembly kit (modification kit), P/N 28–01063–1, in accordance with the instructions in paragraph 6.1 of the Enstrom Service Directive Bulletin (SDB) No. 0110, Revision 4, dated January 23, 2012 (SDB No. 0110 R4), except when the instructions specify using ''Aeroshell 22 grease'' or ''VC–3 Vibra-tite thread locker,'' you may use an equivalent product.

(2) For the Enstrom Model TH–28, 480, and 480B helicopters, modify the lateral and longitudinal trim actuator assemblies using the modification kit, P/N 4230045–1, in accordance with the instructions in paragraph 6.1 of the Enstrom SDB No. T–039, Revision 3, dated July 6, 2011 (SDB No. T–039 R3), except when the instructions specify using ''Aeroshell 22 grease'' or ''VC–3 Vibra-tite thread locker,'' you may use an equivalent product, and you are not required to contact Enstrom Customer Service.

(3) After modifying the lateral and longitudinal trim actuator assemblies in accordance with paragraphs (f)(1) or (f)(2) of this AD, before further flight, operationally test the trim limits in accordance with paragraph 6.2. of the SDB for your model helicopter, and determine during a flight test whether there is appropriate trim authority in accordance with paragraph 6.3. of the SDB for your model helicopter.

(g) Special Flight Permits

A one-time special-flight permit may be issued in accordance with 14 CFR 21.197 and 21.199 provided the helicopter is operated with the trim system circuit breaker pulled.

(h) Alternative Methods of Compliance (AMOCs)

(1) The Manager, Chicago Aircraft Certification Office, FAA, may approve AMOCs for this AD. Send your proposal to: Gregory J. Michalik, Enstrom Program Manager, FAA, Chicago Aircraft Certification Office, 2300 East Devon Avenue, Room 107, Des Plaines, Illinois, 60018; telephone (847) 294–7135; fax (847) 294–7834; email: *gregory.michalik@faa.gov.*

(2) For operations conducted under a 14 CFR part 119 operating certificate or under 14 CFR part 91, subpart K, we suggest that you notify your principal inspector, or lacking a principal inspector, the manager of the local flight standards district office or certificate holding district office before operating any aircraft complying with this AD through an AMOC.

(i) Subject

Joint Aircraft Service Component (JASC) Code: 6710: Main Rotor Control.

(j) Material Incorporated by Reference

(1) The Director of the Federal Register approved the incorporation by reference (IBR) of the following service information under 5 U.S.C. 552(a) and 1 CFR part 51.

(2) You must use the following service information to do the actions required by this AD, unless the AD specifies otherwise.

(3) The following service information was approved for IBR on July 3, 2012.

(i) Enstrom Service Directive Bulletin No. 0110, Revision 4, dated January 23, 2012, for Model F–28C, F–28C–2, F–28F, 280C, 280F, and 280FX helicopters.

(4) The following service information was approved for IBR on January 23, 2012 (77 FR 729, January 6, 2012).

(i) Enstrom Service Directive Bulletin No. T–039, Revision 3, dated July 6, 2011, for Model TH–28, 480, and 480B helicopters.

(5) For service information identified in this AD, contact Enstrom Helicopter Corporation, 2209 22nd St., Menominee, Michigan, 49858–0490; telephone: 906–863–1200; email: *customerservice@enstromhelicopter.com;* Web site: *http://www.enstromhelicopter.com/enstrom_new/enstrom_support_tec.html.*

(6) You may review a copy of the referenced service information at the FAA, Office of the Regional Counsel, Southwest Region, 2601 Meacham Blvd., Room 663, Fort Worth, Texas 76137 or at the National Archives and Records Administration (NARA). For information on the availability of this material at NARA, call 202–741–6030, or go to: *http://www.archives.gov/federal_register/code_of_federal_regulations/ibr_locations.html.*

Issued in Fort Worth, Texas, on May 17, 2012.

Kim Smith,

Manager, Rotorcraft Directorate, Aircraft Certification Service.

[FR Doc. 2012–14634 Filed 6–15–12; 8:45 am]

BILLING CODE 4910–13–P

DEPARTMENT OF TRANSPORTATION

Federal Aviation Administration

14 CFR Part 39

[Docket No. FAA–2011–1254; Directorate Identifier 2010–NM–178–AD; Amendment 39–17083; AD 2012–12–04]

RIN 2120–AA64

Airworthiness Directives; The Boeing Company Airplanes

AGENCY: Federal Aviation Administration (FAA), DOT.

ACTION: Final rule.

SUMMARY: We are superseding an existing airworthiness directive (AD) for certain The Boeing Company Model 737–300, –400, and –500 series airplanes. That AD currently requires repetitive external detailed inspections or non-destructive inspections to detect cracks in the fuselage skin along the chem-mill steps at stringers S–1 and S–2R, between station (STA) 400 and STA 460, and repair if necessary. This new AD adds inspections for cracking in additional fuselage skin locations, and repair if necessary. This new AD also reduces the inspection thresholds and repetitive intervals for certain airplanes. This AD was prompted by reports of additional crack findings of the fuselage skin at the chem-mill steps. We are issuing this AD to detect and correct fatigue cracking of the fuselage skin panels at the chem-mill steps, which could result in sudden fracture and failure of the fuselage skin panels, and consequent rapid decompression of the airplane.

DATES: This AD is effective July 23, 2012.

The Director of the Federal Register approved the incorporation by reference of a certain publication listed in the AD as of July 23, 2012.

ADDRESSES: For service information identified in this AD, contact Boeing Commercial Airplanes, Attention: Data & Services Management, P.O. Box 3707, MC 2H–65, Seattle, Washington 98124–2207; telephone 206–544–5000, extension 1; fax 206–766–5680; Internet *https://www.myboeingfleet.com.* You may review copies of the referenced service information at the FAA, Transport Airplane Directorate, 1601 Lind Avenue SW., Renton, Washington. For information on the availability of this material at the FAA, call 425–227–1221.

Examining the AD Docket

You may examine the AD docket on the Internet at *http://www.regulations.gov;* or in person at the Docket Management Facility between 9 a.m. and 5 p.m., Monday through Friday, except Federal holidays. The AD docket contains this AD, the regulatory evaluation, any comments received, and other information. The address for the Docket Office (phone: 800–647–5527) is Document Management Facility, U.S. Department of Transportation, Docket Operations, M–30, West Building Ground Floor, Room W12–140, 1200 New Jersey Avenue SE., Washington, DC 20590.

FOR FURTHER INFORMATION CONTACT: Wayne Lockett, Aerospace Engineer, Airframe Branch, ANM–120S, FAA, Seattle Aircraft Certification Office, 1601 Lind Avenue SW., Renton, Washington 98057–3356; phone: 425–917–6447; fax: 425–917–6590; email: *wayne.lockett@faa.gov.*

SUPPLEMENTARY INFORMATION:

Discussion

We issued a notice of proposed rulemaking (NPRM) to amend 14 CFR part 39 to supersede AD 2008–19–03, Amendment 39–15670 (73 FR 56958, October 1, 2008). That AD applies to the specified products. The NPRM published in the **Federal Register** on November 28, 2011 (76 FR 72853). That NPRM proposed to continue to require repetitive external detailed inspections or non-destructive inspections to detect cracks in the fuselage skin along the chem-mill steps at stringers S–1 and S–2R, between station (STA) 400 and STA 460, and repair if necessary. That NPRM also proposed to add inspections for cracking in additional fuselage skin locations, and repair if necessary. That NPRM also proposed to reduce the inspection thresholds and repetitive intervals for certain airplanes.

Comments

We gave the public the opportunity to participate in developing this AD. The following presents the comments received on the proposal (76 FR 72853, November 28, 2011) and the FAA's response to each comment.

Support for the NPRM (76 FR 72853, November 28, 2011)

The National Transportation Board supports the NPRM (76 FR 72853, November 28, 2011).

Request To Revise Paragraph (j) of the NPRM (76 FR 72853, November 28, 2011)

Boeing asked that we include Boeing Alert Service Bulletin 737–53A1293, Revision 1, dated July 7, 2010, in the exception to the service bulletin

specified in paragraph (j) of the NPRM (76 FR 72853, November 28, 2011). (Paragraph (j) of the NPRM is identified as paragraph (j)(1) in this final rule.) Boeing stated that the compliance times in paragraph 1.E. ''Compliance'' of Boeing Service Bulletin 737–53A1293, Revision 2, dated August 10, 2011, are based on the release date of Boeing Alert Service Bulletin 737–53A1293, Revision 1, dated July 7, 2010. Boeing added that paragraph (j) of the NPRM should be changed to reference Boeing Alert Service Bulletin 737–53A1293, Revision 1, dated July 7, 2010.

We agree with the commenter's request for the reason provided. We have changed paragraph (j)(1) of this AD accordingly.

Request To Clarify the Language in Paragraph (k) of the NPRM (76 FR 72853, November 28, 2011)

Boeing asked that the language specified in paragraph (k) of the NPRM (76 FR 72853, November 28, 2011) be clarified. (Paragraph (k) of the NPRM is identified as paragraph (j)(2) in this final rule.) Boeing stated that the intent of paragraph (k) of the NPRM is ''to specify an exception to the compliance time for accomplishing the next service bulletin inspection, being the effective date of the AD, for the condition addressed by the paragraph.'' Boeing added that the language does not clearly describe that it is an exception to the compliance time; rather, it could be interpreted as an exception to the condition.

We agree to provide clarification. Paragraph (j)(2) of this AD is an exception to the conditions, and is provided to establish a date from which to determine if an inspection has been previously accomplished. Therefore, we have made no change to the AD in this regard.

Change to Final Rule

This final rule has been changed to include an optional modification of the chem-milled steps at any location identified in Boeing Service Bulletin 737–53A1293, Revision 2, dated August 10, 2011, which would eliminate the need for the repetitive inspections required by paragraph (g) of this AD. We have determined that we can better ensure long-term continued operational safety by including this modification. Therefore, we have added a new paragraph (i) to this AD to include this modification, and reidentified subsequent paragraphs accordingly. In addition, we have indicated in the Costs of Compliance section of this AD that we do not have data regarding the cost of the optional terminating action.

Conclusion

We reviewed the relevant data, considered the comments received, and determined that air safety and the public interest require adopting the AD with the changes described previously—and minor editorial changes. We have determined that these minor changes:

- Are consistent with the intent that was proposed in the NPRM (76 FR 72853, November 28, 2011) for correcting the unsafe condition; and
- Do not add any additional burden upon the public than was already proposed in the NPRM (76 FR 72853, November 28, 2011).

Interim Action

We consider this AD interim action. If final action is identified later, we might consider further rulemaking then.

Costs of Compliance

We estimate that this AD affects 596 airplanes of U.S. registry.

We estimate the following costs to comply with this AD:

ESTIMATED COSTS

Action	Labor cost	Parts cost	Cost per product	Cost on U.S. operators
Inspections (required actions in AD 2008–19–03, Amendment 39–15670 (73 FR 56958, October 1, 2008).	5 work-hours × $85 per hour = $425 per inspection cycle.	N/A	$425 per inspection cycle	$253,300 per inspection cycle.
New inspections	Between 7 and 15 work-hours, depending on airplane configuration = between $595 and $1,275 per inspection cycle.	N/A	Between $595 and $1,275 per inspection cycle.	Between $354,620 and $759,900 per inspection cycle.

We have received no definitive data that would enable us to provide a cost estimate for the on-condition actions or the optional terminating action specified in this AD.

Authority for This Rulemaking

Title 49 of the United States Code specifies the FAA's authority to issue rules on aviation safety. Subtitle I, Section 106, describes the authority of the FAA Administrator. Subtitle VII, Aviation Programs, describes in more detail the scope of the Agency's authority.

We are issuing this rulemaking under the authority described in Subtitle VII, Part A, Subpart III, Section 44701, ''General requirements.'' Under that section, Congress charges the FAA with promoting safe flight of civil aircraft in air commerce by prescribing regulations for practices, methods, and procedures the Administrator finds necessary for safety in air commerce. This regulation is within the scope of that authority because it addresses an unsafe condition that is likely to exist or develop on products identified in this rulemaking action.

Regulatory Findings

We have determined that this AD will not have federalism implications under Executive Order 13132. This AD will not have a substantial direct effect on the States, on the relationship between the national government and the States, or on the distribution of power and responsibilities among the various levels of government.

For the reasons discussed above, I certify that this AD:

(1) Is not a ''significant regulatory action'' under Executive Order 12866,

(2) Is not a ''significant rule'' under DOT Regulatory Policies and Procedures (44 FR 11034, February 26, 1979),

(3) Will not affect intrastate aviation in Alaska, and

(4) Will not have a significant economic impact, positive or negative, on a substantial number of small entities under the criteria of the Regulatory Flexibility Act.

List of Subjects in 14 CFR Part 39

Air transportation, Aircraft, Aviation safety, Incorporation by reference, Safety.

Adoption of the Amendment

Accordingly, under the authority delegated to me by the Administrator, the FAA amends 14 CFR part 39 as follows:

PART 39—AIRWORTHINESS DIRECTIVES

■ 1. The authority citation for part 39 continues to read as follows:

Authority: 49 U.S.C. 106(g), 40113, 44701.

§ 39.13 [Amended]

■ 2. The FAA amends § 39.13 by removing airworthiness directive (AD) 2008–19–03, Amendment 39–15670 (73 FR 56958, October 1, 2008), and adding the following new AD:

2012–12–04 The Boeing Company: Amendment 39–17083; Docket No. FAA–2011–1254; Directorate Identifier 2010–NM–178–AD.

(a) Effective Date

This airworthiness directive (AD) is effective July 23, 2012.

(b) Affected ADs

This AD supersedes AD 2008–19–03, Amendment 39–15670 (73 FR 56958, October 1, 2008).

(c) Applicability

This AD applies to The Boeing Company Model 737–300, –400, and –500 series airplanes, certificated in any category; as identified in Boeing Service Bulletin 737–53A1293, Revision 2, dated August 10, 2011.

(d) Subject

Joint Aircraft System Component (JASC)/ Air Transport Association (ATA) of America Code 53, Fuselage.

(e) Unsafe Condition

This AD was prompted by reports of additional crack findings of the fuselage skin at the chem-mill steps. We are issuing this AD to detect and correct fatigue cracking of the fuselage skin panels at the chem-mill steps, which could result in sudden fracture and failure of the fuselage skin panels, and consequent rapid decompression of the airplane.

(f) Compliance

Comply with this AD within the compliance times specified, unless already done.

(g) Repetitive Inspections

At the applicable times specified in paragraph 1.E., ''Compliance,'' of Boeing Service Bulletin 737–53A1293, Revision 2, dated August 10, 2011, except as provided by paragraphs (j)(1) and (j)(2) of this AD: Do both a detailed inspection and a nondestructive inspection (NDI) (medium frequency eddy current, magneto optical imaging, C-scan, or ultrasonic phased array) to detect cracks in the fuselage skin along the chem-mill steps at stringers S–1 and S–2R, between station (STA) 400 and STA 460, in accordance with the Accomplishment Instructions of Boeing Service Bulletin 737–53A1293, Revision 2, dated August 10, 2011. Repeat the applicable inspections thereafter at intervals not to exceed those specified in paragraph 1.E., ''Compliance,'' of Boeing Service Bulletin 737–53A1293, Revision 2, dated August 10, 2011.

(h) Repair

(1) If any crack is found during any inspection required by paragraph (g) of this AD, before further flight, repair in accordance with the Accomplishment Instructions of Boeing Service Bulletin 737–53A1293, Revision 2, dated August 10, 2011; except as provided by paragraph (h)(2) of this AD. Installation of a repair that meets the conditions specified in paragraph 1.E., ''Compliance,'' of Boeing Service Bulletin 737–53A1293, Revision 2, dated August 10, 2011, terminates the repetitive inspections required by paragraph (g) of this AD for the repaired area only.

(2) If any crack is found during any inspection required by paragraph (g) of this AD and Boeing Service Bulletin 737–53A1293, Revision 2, dated August 10, 2011, specifies to contact Boeing for repair: Before further flight, repair using a method approved in accordance with the procedures specified in paragraph (l) of this AD.

(i) Optional Modification

Accomplishing a modification of the chem-milled steps at any location identified in Boeing Service Bulletin 737–53A1293, Revision 2, dated August 10, 2011, using a method approved in accordance with the procedures specified in paragraph (l)(1) of this AD, terminates the repetitive inspections required by paragraph (g) of this AD for the modified area only.

(j) Exceptions to Service Bulletin

(1) Where Boeing Service Bulletin 737–53A1293, Revision 2, dated August 10, 2011, specifies a compliance time relative to the date of Boeing Alert Service Bulletin 737–53A1293, Revision 1, dated July 7, 2010, this AD requires compliance within the specified compliance time after the effective date of this AD.

(2) Where the Condition column of paragraph 1.E., ''Compliance,'' of Boeing Service Bulletin 737–53A1293, Revision 2, dated August 10, 2011, specifies a condition based on whether an airplane has or has not been inspected, this AD bases the condition on whether an airplane has or has not been inspected as of the effective date of this AD.

(3) The post-repair inspection specified in Tables 4 and 6 of paragraph 1.E., ''Compliance,'' of Boeing Service Bulletin 737–53A1293, Revision 2, August 10, 2011, is not required by this AD.

Note 1 to paragraph (j)(3) of this AD: The damage tolerance inspections specified in Tables 4 and 6 of paragraph 1.E., ''Compliance,'' of Boeing Service Bulletin 737–53A1293, Revision 2, August 10, 2011, may be used in support of compliance with section 121.1109(c)(2) or 129.109(c)(2) of the Federal Aviation Regulations (14 CFR 121.1109(c)(2) or 14 CFR 129.109(c)(2)).

(k) Credit for Previous Actions

This paragraph provides credit for the actions required by paragraphs (g), (h), and (i) of this AD, if those actions were performed before the effective date of this AD using Boeing Alert Service Bulletin 737–53A1293, Revision 1, dated July 7, 2010.

(l) Alternative Methods of Compliance (AMOCs)

(1) The Manager, Seattle ACO, FAA, has the authority to approve AMOCs for this AD, if requested using the procedures found in 14 CFR 39.19. In accordance with 14 CFR 39.19, send your request to your principal inspector or local Flight Standards District Office, as appropriate. If sending information directly to the manager of the ACO, send it to the attention of the person identified in the Related Information section of this AD. Information may be emailed to: *9-ANM-Seattle-ACO-AMOC-Requests@faa.gov.*

(2) Before using any approved AMOC, notify your appropriate principal inspector, or lacking a principal inspector, the manager of the local flight standards district office/ certificate holding district office.

(3) An AMOC that provides an acceptable level of safety may be used for any repair required by this AD if it is approved by the Boeing Commercial Airplanes ODA that has been authorized by the Manager, Seattle ACO, to make those findings. For a repair method to be approved, the repair must meet the certification basis of the airplane, and the approval must specifically refer to this AD.

(4) AMOCs approved for AD 2008–19–03, Amendment 39–15670 (73 FR 56958, October 1, 2008), are approved as AMOCs for the corresponding requirements in this AD.

(m) Related Information

For more information about this AD, contact Wayne Lockett, Aerospace Engineer, Airframe Branch, ANM–120S, FAA, Seattle Aircraft Certification Office, 1601 Lind Avenue SW., Renton, Washington 98057–3356; phone: 425–917–6447; fax: 425–917–6590; email: *wayne.lockett@faa.gov.*

(n) Material Incorporated by Reference

(1) You must use the following service information to do the actions required by this AD, unless the AD specifies otherwise. The Director of the Federal Register approved the incorporation by reference (IBR) of the following service information under 5 U.S.C. 552(a) and 1 CFR part 51:

(i) Boeing Service Bulletin 737–53A1293, Revision 2, dated August 10, 2011.

(2) For service information identified in this AD, contact Boeing Commercial Airplanes, Attention: Data & Services Management, P.O. Box 3707, MC 2H–65, Seattle, Washington 98124–2207; telephone 206–544–5000, extension 1; fax 206–766–5680; Internet *https://www.myboeingfleet.com.*

(3) You may review copies of the referenced service information at the FAA, Transport Airplane Directorate, 1601 Lind Avenue SW., Renton, Washington. For information on the availability of this material at the FAA, call 425–227–1221.

(4) You may also review copies of the service information that is incorporated by

reference at the National Archives and Records Administration (NARA). For information on the availability of this material at NARA, call 202–741–6030, or go to: *http://www.archives.gov/federal-register/cfr/ibr_locations.html.*

Issued in Renton, Washington, on May 31, 2012.

Michael Kaszycki,

Acting Manager, Transport Airplane Directorate, Aircraft Certification Service.

[FR Doc. 2012–14377 Filed 6–15–12; 8:45 am]

BILLING CODE 4910–13–P

DEPARTMENT OF TRANSPORTATION

Federal Aviation Administration

14 CFR Part 39

[Docket No. FAA–2012–0600; Directorate Identifier 2012–SW–017–AD; Amendment 39–17076; AD 2012–11–12]

RIN 2120–AA64

Airworthiness Directives; AGUSTA S.p.A. Helicopters

AGENCY: Federal Aviation Administration (FAA), Department of Transportation (DOT).

ACTION: Final rule; request for comments.

SUMMARY: We are adopting a new airworthiness directive (AD) for Agusta S.p.A. (Agusta) Model AW139 helicopters to determine if the hardware that attaches the upper end of collective control rod C2 to torque tube C3 is properly installed. This AD is prompted by the discovery of an incorrectly-attached collective control rod. These actions are intended to prevent separation of the collective control rod from the torque tube, loss of control of the collective pitch, and subsequent loss of control of the helicopter.

DATES: This AD becomes effective July 3, 2012.

The Director of the Federal Register approved the incorporation by reference of a certain publication listed in this AD as of July 3, 2012.

We must receive comments on this AD by August 17, 2012.

ADDRESSES: You may send comments by any of the following methods:

- *Federal eRulemaking Docket:* Go to *http://www.regulations.gov.* Follow the online instructions for sending your comments electronically.
- *Fax:* 202–493–2251.
- *Mail:* Send comments to the U.S. Department of Transportation, Docket Operations, M–30, West Building Ground Floor, Room W12–140, 1200 New Jersey Avenue SE., Washington, DC 20590–0001.
- *Hand Delivery:* Deliver to the ''Mail'' address between 9 a.m. and 5 p.m., Monday through Friday, except Federal holidays.

Examining the AD Docket: You may examine the AD docket on the Internet at *http://www.regulations.gov* or in person at the Docket Operations Office between 9 a.m. and 5 p.m., Monday through Friday, except Federal holidays. The AD docket contains this AD, the economic evaluation, any comments received, and other information. The street address for the Docket Operations Office (telephone 800–647–5527) is in the **ADDRESSES** section. Comments will be available in the AD docket shortly after receipt.

For service information identified in this AD, contact Agusta Westland, Customer Support & Services, Via Per Tornavento 15, 21019 Somma Lombardo (VA) Italy, ATTN: Giovanni Cecchelli; telephone 39–0331–711133; fax 39 0331 711180; or at *http://www.agusta westland.com/technical-bullettins.* You may review the referenced service information at the FAA, Office of the Regional Counsel, Southwest Region, 2601 Meacham Blvd., Room 663, Fort Worth, Texas 76137.

FOR FURTHER INFORMATION CONTACT: Sharon Miles, Aviation Safety Engineer, Regulations and Policy Group, Rotorcraft Directorate, FAA, 2601 Meacham Blvd., Fort Worth, TX 76137; telephone (817) 222 5110; email *sharon.y.miles@faa.gov.*

SUPPLEMENTARY INFORMATION:

Comments Invited

This AD is a final rule that involves requirements affecting flight safety, and we did not provide you with notice and an opportunity to provide your comments prior to it becoming effective. However, we invite you to participate in this rulemaking by submitting written comments, data, or views. We also invite comments relating to the economic, environmental, energy, or federalism impacts that resulted from adopting this AD. The most helpful comments reference a specific portion of the AD, explain the reason for any recommended change, and include supporting data. To ensure the docket does not contain duplicate comments, commenters should send only one copy of written comments, or if comments are filed electronically, commenters should submit them only one time. We will file in the docket all comments that we receive, as well as a report summarizing each substantive public contact with FAA personnel concerning this rulemaking during the comment period. We will consider all the comments we receive and may conduct additional rulemaking based on those comments.

Discussion

The European Aviation Safety Agency (EASA), which is the Technical Agent for the Member States of the European Union, has issued EASA AD No. 2011–0226–E, dated December 2, 2011 (EASA AD 2011–0226–E), to correct an unsafe condition for the Agusta AW139 helicopters. EASA advises that an occurrence of incorrect installation of a collective control rod has been reported. This improper installation was identified on an in-service helicopter during the first annual inspection.

The subsequent investigation by the manufacturer led it to conclude that this discrepancy could affect other helicopters because the production quality control procedures did not require recording the applied torque on the bolt attaching the collective control rod to the torque tube. To address this unsafe condition, AgustaWestland issued Bollettino Tecnico (BT) No. 139–275, dated December 1, 2011, (BT 139–275) and EASA issued AD 2011–0226–E to require an inspection of the attaching point of the flight control rod to the torque tube and if improperly installed, reinstalling the parts.

This condition, if not detected and corrected, could lead to in-flight separation of the collective control rod from the torque tube, loss of control of the collective pitch, and subsequent loss of control of the helicopter.

FAA's Determination

These helicopters have been approved by the aviation authority of Italy and are approved for operation in the United States. Pursuant to our bilateral agreement with Italy, the EASA, its technical representative, has notified us of the unsafe condition described in the EASA AD. We are issuing this AD because we evaluated all information provided by the EASA and determined the unsafe condition is likely to exist or develop on other helicopters of the same type design.

Related Service Information

We reviewed BT 139–275, which contains procedures to inspect for the proper installation of control rod C2 in the roof area and to ensure that the attaching hardware that connects the control rod to the torque tube is properly installed.

AD Requirements

This AD requires:

- Within 5 hours time-in-service or 7 days, whichever occurs earlier, visually inspecting the connection between

control rod C2 and torque tube C3 for the proper installation of the bolt, washers, self locking nut, and cotter pin.

• If the installed hardware is not as prescribed in this AD, before further flight, re-installing control rod C2 with the correct bolt, washers, self locking nut, and cotter pin.

Costs of Compliance

We estimate that this AD will affect 1 helicopter of U.S. Registry. We estimate that this operator may incur the following costs in order to comply with this AD. Inspecting and reassembling the control rod will require about 8 work hours at an average labor rate of $85 per hour, for a total cost per helicopter of $680. Any required parts costs are minimal.

FAA's Justification and Determination of the Effective Date

Providing an opportunity for public comments prior to adopting these AD requirements would delay implementing the safety actions needed to correct this known unsafe condition. Therefore, we find that the risk to the flying public justifies waiving notice and comment prior to the adoption of this rule because the required corrective actions must be accomplished within 5 hours time-in-service, a very short time period based on the average flight-hour utilization rate of these helicopters.

Since an unsafe condition exists that requires the immediate adoption of this AD, we determined that notice and opportunity for public comment before issuing this AD are impracticable and that good cause exists for making this amendment effective in less than 30 days.

Authority for This Rulemaking

Title 49 of the United States Code specifies the FAA's authority to issue rules on aviation safety. Subtitle I, section 106, describes the authority of the FAA Administrator. ''Subtitle VII: Aviation Programs,'' describes in more detail the scope of the Agency's authority.

We are issuing this rulemaking under the authority described in ''Subtitle VII, Part A, Subpart III, Section 44701: General requirements.'' Under that section, Congress charges the FAA with promoting safe flight of civil aircraft in air commerce by prescribing regulations for practices, methods, and procedures the Administrator finds necessary for safety in air commerce. This regulation is within the scope of that authority because it addresses an unsafe condition that is likely to exist or develop on products identified in this rulemaking action.

Regulatory Findings

We determined that this AD will not have federalism implications under Executive Order 13132. This AD will not have a substantial direct effect on the States, on the relationship between the national Government and the States, or on the distribution of power and responsibilities among the various levels of government.

For the reasons discussed, I certify that this AD:

1. Is not a ''significant regulatory action'' under Executive Order 12866;

2. Is not a ''significant rule'' under DOT Regulatory Policies and Procedures (44 FR 11034, February 26, 1979);

3. Will not affect intrastate aviation in Alaska to the extent that it justifies making a regulatory distinction; and

4. Will not have a significant economic impact, positive or negative, on a substantial number of small entities under the criteria of the Regulatory Flexibility Act.

We prepared an economic evaluation of the estimated costs to comply with this AD and placed it in the AD docket.

List of Subjects in 14 CFR Part 39

Air transportation, Aircraft, Aviation safety, Incorporation by reference, Safety.

Adoption of the Amendment

Accordingly, under the authority delegated to me by the Administrator, the FAA amends 14 CFR part 39 as follows:

PART 39—AIRWORTHINESS DIRECTIVES

■ 1. The authority citation for part 39 continues to read as follows:

Authority: 49 U.S.C. 106(g), 40113, 44701.

§ 39.13 [Amended]

■ 2. The FAA amends § 39.13 by adding the following new airworthiness directive (AD):

2012–11–12 AGUSTA S.P.A.: Amendment 39–17076; Docket No. FAA–2012–0600; Directorate Identifier 2012–SW–017–AD.

(a) Applicability

This AD applies to Agusta S.p.A. (Agusta) Model AW139 helicopters, serial number (S/N) 31306, 31314, 31317, 31319, 31320, 31322, 31323, and S/N 31325 through 31345 (except S/N 31329, 31333, 31338, 31339, and 31341), certificated in any category.

(b) Unsafe Condition

This AD defines the unsafe condition as an incorrectly installed collective control rod, which could result in detachment of the collective control rod, resulting in subsequent loss of control of the helicopter.

(c) Effective Date

This AD becomes effective July 3, 2012.

(d) Compliance

You are responsible for performing each action required by this AD within the specified compliance time unless it has already been accomplished prior to that time.

(e) Required Actions

(1) Within 5 hours time-in-service (TIS) or 7 days, whichever occurs earlier, inspect the connection between the collective control rod C2 and the torque tube C3 for proper installation of the: bolt, part number (P/N) NAS6604D15; washer under the bolt head, P/N A160A0432K; self-locking nut, P/N MS17825–4; washer under the self-locking nut, P/N NAS1149D0432K; and the cotter pin, P/N MS24655–136, as depicted in Figures 1 and 2, of Agusta Bollettino Tecnico No. 139–275, dated December 1, 2011, (ABT 139–275).

(2) If the connection between the collective control rod C2 and the torque tube C3 is not as depicted in Figures 1 and 2 of ABT 139–275, before further flight, properly connect control rod C2 to torque tube C3. In order to obtain the correct bolt grip length and cotter pin installation, you may use a maximum of 2 washers, P/N NAS1149D0432K, under the self-locking nut.

(f) Alternative Methods of Compliance (AMOCs)

(1) The Manager, Safety Management Group, FAA, may approve AMOCs for this AD. Send your proposal to: Sharon Miles, Aviation Safety Engineer, Regulations and Policy Group, Rotorcraft Directorate, FAA, 2601 Meacham Blvd., Fort Worth, TX 76137; telephone (817) 222–5110; email *sharon.y.miles@faa.gov.*

(2) For operations conducted under a 14 CFR part 119 operating certificate or under 14 CFR part 91, subpart K, we suggest that you notify your principal inspector, or lacking a principal inspector, the manager of the local flight standards district office or certificate holding district office, before operating any aircraft complying with this AD through an AMOC.

(g) Additional Information

The subject of this AD is addressed in European Aviation Safety Agency AD No. 2011–0226–E, dated December 2, 2011.

(h) Subject

Joint Aircraft Service Component (JASC) Code: 6710: Main Rotor Control.

(i) Material Incorporated by Reference

(1) The Director of the Federal Register approved the incorporation by reference (IBR) of the following service information under 5 U.S.C. 552(a) and 1 CFR part 51.

(2) You must use the following service information to do the actions required by this AD, unless the AD specifies otherwise.

(3) The following service information was approved for IBR on July 3, 2012.

(i) Agusta Bollettino Tecnico No. 139–275, dated December 1, 2011.

(4) For service information identified in this AD, contact Agusta Westland, Customer Support & Services, Via Per Tornavento 15,

21019 Somma Lombardo (VA) Italy, ATTN: Giovanni Cecchelli; telephone 39–0331–711133; fax 39 0331 711180; or at *http://www.agustawestland.com/technical-bullettins.*

(5) You may review the referenced service information at the FAA, Office of the Regional Counsel, Southwest Region, 2601 Meacham Blvd., Room 663, Fort Worth, Texas 76137 or at the National Archives and Records Administration (NARA). For information on the availability of this material at NARA, call (202) 741–6030, or go to: *http://www.archives.gov/federal_register/code_of_federal_regulations/ibr_locations.html.*

Issued in Fort Worth, Texas, on May 30, 2012.

Lance T. Gant,

Acting Manager, Rotorcraft Directorate, Aircraft Certification Service.

[FR Doc. 2012–14385 Filed 6–15–12; 8:45 am]

BILLING CODE 4910–13–P

DEPARTMENT OF TRANSPORTATION

Federal Aviation Administration

14 CFR Part 39

[Docket No. FAA–2011–1255; Directorate Identifier 2010–NM–182–AD; Amendment 39–17084; AD 2012–12–05]

RIN 2120–AA64

Airworthiness Directives; The Boeing Company Airplanes

AGENCY: Federal Aviation Administration (FAA), DOT.

ACTION: Final rule.

SUMMARY: We are superseding two existing airworthiness directives (ADs) for certain Model 737–100, –200, –200C, –300, –400, and –500 series airplanes. The first existing AD currently requires, for certain airplanes, repetitive inspections of the Station (STA) 348.2 frame to detect cracking under the stop fittings and intercostal flanges at stringers S–14L, S–15L, and S–16L, and corrective action if necessary. The second existing AD currently requires repetitive inspections to detect cracking of the intercostal webs, attachment clips, and stringer splice channels, and corrective action if necessary. This new AD requires that the inspection for cracking under the stop fittings be done on additional airplanes; extends the repetitive interval for certain airplanes; adds a one-time inspection to detect missing fasteners; and updates or adds certain inspection and repair instructions. This new AD also requires, for certain airplanes, repetitive inspections of the cargo barrier net fitting for cracking, and repair if necessary. This new AD also adds, for certain airplanes, repetitive inspections for cracking of the stringer S–15L aft intercostal, and repair if necessary. This AD was prompted by reports of cracking of the STA 348.2 frame above the two outboard fasteners attaching the frame inner chord and door stop fittings, and in the outboard chord at stringer S–16L. We have also received reports of missing fasteners in the STA 348.2 frame inner chord. We are issuing this AD to detect and correct fatigue cracking of the intercostals on the forward and aft sides of the forward entry door cutout, which could result in loss of the forward entry door and rapid decompression of the airplane.

DATES: This AD is effective July 23, 2012.

The Director of the Federal Register approved the incorporation by reference of certain publications listed in the AD as of July 23, 2012.

The Director of the Federal Register approved the incorporation by reference of a certain publication listed in the AD as of September 9, 2009 (74 FR 38901, August 5, 2009).

The Director of the Federal Register approved the incorporation by reference of a certain publication listed in the AD as of November 1, 2005 (70 FR 56361, September 27, 2005).

The Director of the Federal Register approved the incorporation by reference of a certain publication listed in the AD as of June 4, 2004 (69 FR 23646, April 30, 2004).

ADDRESSES: For service information identified in this AD, contact Boeing Commercial Airplanes, Attention: Data & Services Management, P.O. Box 3707, MC 2H–65, Seattle, Washington 98124–2207; telephone 206–544–5000, extension 1; fax 206–766–5680; Internet *https://www.myboeingfleet.com.* You may review copies of the referenced service information at the FAA, Transport Airplane Directorate, 1601 Lind Avenue SW., Renton, Washington. For information on the availability of this material at the FAA, call 425–227–1221.

Examining the AD Docket

You may examine the AD docket on the Internet at *http://www.regulations.gov;* or in person at the Docket Management Facility between 9 a.m. and 5 p.m., Monday through Friday, except Federal holidays. The AD docket contains this AD, the regulatory evaluation, any comments received, and other information. The address for the Docket Office (phone: 800–647–5527) is Document Management Facility, U.S. Department of Transportation, Docket Operations, M–30, West Building Ground Floor, Room W12–140, 1200 New Jersey Avenue SE., Washington, DC 20590.

FOR FURTHER INFORMATION CONTACT: Alan Pohl, Aerospace Engineer, Airframe Branch, ANM–120S, FAA, Seattle Aircraft Certification Office, 1601 Lind Avenue SW., Renton, Washington 98057–3356; phone: (425) 917–6450; fax: (425) 917–6590; email: *Alan.Pohl@faa.gov.*

SUPPLEMENTARY INFORMATION:

Discussion

We issued a notice of proposed rulemaking (NPRM) to amend 14 CFR part 39 to supersede airworthiness directives AD 2004–09–09, Amendment 39–13598 (69 FR 23646, April 30, 2004); and AD 2009–16–14, Amendment 39–15987 (74 FR 38901, August 5, 2009). Those ADs apply to the specified products. The NPRM published in the **Federal Register** on November 28, 2011 (76 FR 72858). The NPRM proposed to retain certain requirements of AD 2004–09–09 and AD 2009–16–14. The NPRM proposed to also add airplanes to the applicability for the high frequency eddy current (HFEC) inspection for cracking of the stop fittings at the shear web at the STA 348.2 frame; extend the repetitive interval for the HFEC inspection of the STA 348.2 frame for Model 737–200C airplanes; add an inspection to detect missing fasteners of the STA 348.2 frame inner chord; and update or add certain inspection and repair instructions.

Comments

We gave the public the opportunity to participate in developing this AD. The following presents the comments received on the proposal (76 FR 72858, November 28, 2011) and the FAA's response to each comment.

Support for NPRM (76 FR 72858, November 28, 2011)

Boeing concurs with the contents of the NPRM (76 FR 72858, November 28, 2011).

Requests To Remove or Revise Exception to Certain Service Information

Southwest Airlines (SWA) asked that paragraph (r) of the NPRM (76 FR 72858, November 28, 2011) be removed, or revised to provide clarification. SWA stated that the exception specified in paragraph (r) of the NPRM does not allow the sequence of steps in the Work Instructions of Boeing Alert Service Bulletin 737–53A1240, Revision 1, dated June 29, 2010, to be changed. SWA added that it has serious concerns

that this paragraph effectively eliminates all flexibility when accomplishing open access, the order of which locations get inspected, and close access. SWA noted that this becomes very difficult in a maintenance environment where other activities may be worked concurrently. SWA asked if the intent of the exception in paragraph (r) of the NPRM is to make removing the windscreen before the lavatory and removing the fasteners identified in Circle Note 1 prior to removing the fasteners identified in Circle Note 2 conditions of compliance. SWA understands that certain steps contained in Boeing Alert Service Bulletin 737–53A1240, Revision 1, dated June 29, 2010, might have to be accomplished in a specific order. However, SWA noted that the umbrella restriction imposed by paragraph (r) of the NPRM goes beyond that intent and results in restrictions when performing maintenance.

Scandanavian Airlines Systems (SAS) asked that we include an option of removing the shear web before accomplishing the inspection specified in Boeing Alert Service Bulletin 737–53A1204, Revision 2, dated June 24, 2010, as part of the access procedures specified in the NPRM (76 FR 72858, November 28, 2011). SAS stated that it has previously accomplished the inspections as an alternative method of compliance (AMOC) to AD 2009–16–14, Amendment 39–15987 (74 FR 38901, August 5, 2009). SAS noted that it also received clarification from the manufacturer regarding the shear web removal step in Parts 1 and 2 of the Accomplishment Instructions of Boeing Alert Service Bulletin 737–53A1204, Revision 2, dated June 24, 2010. SAS stated that the shear web removal is not part of the inspection procedures specified in Boeing Alert Service Bulletin 737–53A1204, Revision 1, dated March 26, 2007.

We agree with the commenters for the reasons provided. We have revised paragraph (r) of this AD accordingly.

Request To Include Reference to Previously Approved AMOCs

SWA asked that we include a reference to AMOCs approved for AD 2005–20–03, Amendment 39–14296 (70 FR 56361, September 27, 2005) in the NPRM (76 FR 72858, November 28, 2011). SWA pointed out that paragraph (m)(4) of AD 2009–16–14, Amendment 39–15987 (74 FR 38901, August 5, 2009), stated that ''AMOCs approved previously in accordance with AD 2005–20–03 are approved as AMOCs for the corresponding provisions of this AD, provided the repetitive inspection intervals (if any) do not exceed 6,000 flight cycles.'' SWA specified that paragraph (t)(5) of the NPRM can be interpreted to mean that an AMOC issued for AD 2005–20–03, which was approved as an AMOC to AD 2009–16–14, will be considered as an AMOC to the NPRM.

We agree with the commenter that AMOCs approved for AD 2005–20–03, Amendment 39–14296 (70 FR 56361, September 27, 2005), as specified in paragraph (m)(4) of AD 2009–16–14, Amendment 39–15987 (74 FR 38901, August 5, 2009), are still approved for the corresponding requirements of this AD. For clarity, we have added a new paragraph (t)(5) to this AD to include that information, and we reidentified the existing paragraph (t)(5) of the NPRM (76 FR 72858, November 28, 2011) as paragraph (t)(6) in this final rule.

Explanation of Additional Changes Made to This AD

We have clarified the compliance time in paragraph (q) of this AD by adding the phrase ''whichever occurs later.''

We have updated certain headings throughout this AD.

Conclusion

We reviewed the relevant data, considered the comments received, and determined that air safety and the public interest require adopting the AD with the changes described previously—and minor editorial changes. We have determined that these minor changes:

- Are consistent with the intent that was proposed in the NPRM (76 FR 72858, November 28, 2011) for correcting the unsafe condition; and
- Do not add any additional burden upon the public than was already proposed in the NPRM (76 FR 72858, November 28, 2011).

Costs of Compliance

We estimate that this AD affects 581 airplanes of U.S. registry.

We estimate the following costs to comply with this AD:

ESTIMATED COSTS

Action	Labor cost	Parts cost	Cost per product	Cost on U.S. operators
Inspections for cracking under the stop fittings and intercostal flanges [retained from AD 2004–09–09, Amendment 39–13598 (69 FR 23646, April 30, 2004)].	18 work-hours × $85 per hour = $1,530 per inspection cycle.	$0	$1,530 per inspection cycle.	$888,930 per inspection cycle.
Inspection of areas forward of the aft entry door [retained from AD 2009–16–14, Amendment 39–15987 (74 FR 38901, August 5, 2009)].	2 work-hours × $85 per hour = $170 per inspection cycle.	0	$170 per inspection cycle.	$98,770 per inspection cycle.
Inspection of areas aft of the forward entry door [retained from AD 2009–16–14, Amendment 39–15987 (74 FR 38901, August 5, 2009)].	1 work-hour × $85 per hour = $85 per inspection cycle.	0	$85 per inspection cycle.	$49,385 per inspection cycle.
Inspection for missing fasteners [new action].	1 work-hour × $85 per hour = $85	476	$561	$325,941.

We estimate the following costs to do any necessary repairs that would be required based on the results of the inspections. We have no way of determining the number of aircraft that might need these repairs:

ON-CONDITION COSTS

Action	Labor cost	Parts cost	Cost per product
Repair of cracking if done in accordance with a method approved by the FAA.	Unknown	Unknown	Unknown.
Repair of cracking if done in accordance with Boeing Alert Service Bulletin 737–53A1240, Revision 1, dated June 29, 2010.	24 work-hours	$11,856	$13,896.

According to the manufacturer, some of the costs of this AD may be covered under warranty, thereby reducing the cost impact on affected individuals. We do not control warranty coverage for affected individuals. As a result, we have included all costs in our cost estimate.

Authority for This Rulemaking

Title 49 of the United States Code specifies the FAA's authority to issue rules on aviation safety. Subtitle I, Section 106, describes the authority of the FAA Administrator. Subtitle VII, Aviation Programs, describes in more detail the scope of the Agency's authority.

We are issuing this rulemaking under the authority described in Subtitle VII, Part A, Subpart III, Section 44701, ''General requirements.'' Under that section, Congress charges the FAA with promoting safe flight of civil aircraft in air commerce by prescribing regulations for practices, methods, and procedures the Administrator finds necessary for safety in air commerce. This regulation is within the scope of that authority because it addresses an unsafe condition that is likely to exist or develop on products identified in this rulemaking action.

Regulatory Findings

We have determined that this AD will not have federalism implications under Executive Order 13132. This AD will not have a substantial direct effect on the States, on the relationship between the national government and the States, or on the distribution of power and responsibilities among the various levels of government.

For the reasons discussed above, I certify that this AD:

(1) Is not a ''significant regulatory action'' under Executive Order 12866,

(2) Is not a ''significant rule'' under DOT Regulatory Policies and Procedures (44 FR 11034, February 26, 1979),

(3) Will not affect intrastate aviation in Alaska, and

(4) Will not have a significant economic impact, positive or negative, on a substantial number of small entities under the criteria of the Regulatory Flexibility Act.

List of Subjects in 14 CFR Part 39

Air transportation, Aircraft, Aviation safety, Incorporation by reference, Safety.

Adoption of the Amendment

Accordingly, under the authority delegated to me by the Administrator, the FAA amends 14 CFR part 39 as follows:

PART 39—AIRWORTHINESS DIRECTIVES

■ 1. The authority citation for part 39 continues to read as follows:

Authority: 49 U.S.C. 106(g), 40113, 44701.

§ 39.13 [Amended]

■ 2. The FAA amends § 39.13 by removing airworthiness directive (AD) 2004–09–09, Amendment 39–13598 (69 FR 23646, April 30, 2004); and AD 2009–16–14, Amendment 39–15987 (74 FR 38901, August 5, 2009); and adding the following new AD:

2012–12–05 The Boeing Company: Amendment 39–17084; Docket No. FAA–2011–1255; Directorate Identifier 2010–NM–182–AD.

(a) Effective Date

This airworthiness directive (AD) is effective July 23, 2012.

(b) Affected ADs

This AD supersedes AD 2004–09–09, Amendment 39–13598 (69 FR 23646, April 30, 2004); and AD 2009–16–14, Amendment 39–15987 (74 FR 38901, August 5, 2009).

(c) Applicability

This AD applies to all The Boeing Company Model 737–100, –200, –200C, –300, –400, and –500 series airplanes, certificated in any category.

(d) Subject

Joint Aircraft System Component (JASC)/ Air Transport Association (ATA) of America Code 53, Fuselage.

(e) Unsafe Condition

This AD was prompted by reports of cracking of the station (STA) 348.2 frame above the two outboard fasteners attaching the frame inner chord and door stop fittings, and in the outboard chord at stringer S–16L. We have also received reports of missing fasteners in the STA 348.2 frame inner chord. We are issuing this AD to detect and correct fatigue cracking of the intercostals on the forward and aft sides of the forward entry door cutout, which could result in loss of the forward entry door and rapid decompression of the airplane.

(f) Compliance

Comply with this AD within the compliance times specified, unless already done.

(g) Retained Initial and Repetitive Inspections at STA 348.2 for Model 737–200C Series Airplanes

This paragraph restates the requirements of paragraph (a) of AD 2004–09–09, Amendment 39–13598 (69 FR 23646, April 30, 2004), with revised service information. For Model 737–200C series airplanes: Except as provided by paragraph (h) of this AD, prior to the accumulation of 46,000 total flight cycles, or within 2,250 flight cycles after June 4, 2004 (the effective date of AD 2004–09–09), whichever occurs later, do detailed and eddy current inspections of the STA 348.2 frame for cracking under the stop fittings and intercostal flanges at stringers 14L, 15L, and 16L by accomplishing paragraphs 3.A and 3.B.1 through 3.B.7 of the Accomplishment Instructions of Boeing Alert Service Bulletin 737–53A1240, dated April 10, 2003; or by accomplishing Part 1 of the Accomplishment Instructions of Boeing Alert Service Bulletin 737–53A1240, Revision 1, dated June 29, 2010. Do the actions in accordance with Boeing Alert Service Bulletin 737–53A1240, dated April 10, 2003; or Boeing Alert Service Bulletin 737–53A1240, Revision 1, dated June 29, 2010. Any applicable repair must be accomplished prior to further flight. Repeat the inspections thereafter at intervals not to exceed 6,000 flight cycles. As of the effective date of this AD, only Boeing Alert Service Bulletin 737–53A1240, Revision 1, dated June 29, 2010, may be used to accomplish the actions required by this paragraph.

(h) Retained Corrective Action for Paragraph (g) of This AD

This paragraph restates the requirements of paragraph (b) of AD 2004–09–09, Amendment 39–13598 (69 FR 23646, April 30, 2004), with revised service information. If any crack is found during any inspection required by paragraph (g) of this AD, and Boeing Alert Service Bulletin 737–53A1240, dated April 10, 2003; or Boeing Alert Service Bulletin 737–53A1240, Revision 1, dated June 29, 2010; specifies to contact Boeing for appropriate action: Before further flight, repair in accordance with a method approved by the Manager, Seattle Aircraft Certification Office (ACO), FAA; or using a method approved in accordance with the procedures specified in paragraph (t) of this AD.

(i) Retained Initial Compliance Time for Model 737–100, –200, –200C, –300, –400, and –500 Series Airplanes

This paragraph restates the requirements of paragraph (f) of AD 2009–16–14, Amendment 39–15987 (74 FR 38901, August 5, 2009). For all Model 737–100, –200, –200C, –300, –400, and –500 series airplanes, as identified in Boeing Alert Service Bulletin 737–53A1204, Revision 1, dated March 26, 2007: Before the accumulation of 15,000 total flight cycles, or within 4,500 flight cycles after November 1, 2005 (the effective date of AD 2005–20–03, Amendment 39–14296 (70 FR 56361, September 27, 2005)), whichever occurs later: Do the inspections required by paragraphs (k) and (l) of this AD.

(j) Retained Initial Compliance Time for Model 737–200C Series Airplanes

This paragraph restates the requirements of paragraph (g) of AD 2009–16–14, Amendment 39–15987 (74 FR 38901, August 5, 2009). For all Model 737–200C series airplanes, as identified in Boeing Alert Service Bulletin 737–53A1204, Revision 1, dated March 26, 2007: Before the accumulation of 15,000 total flight cycles, or within 4,500 flight cycles after September 9, 2009 (the effective date of AD 2009–16–14), whichever occurs later, do the inspection required by paragraph (m) of this AD.

(k) Retained Initial Inspection for Group 1 Configuration Airplanes

This paragraph restates the requirements of paragraph (h) of AD 2009–16–14, Amendment 39–15987 (74 FR 38901, August 5, 2009), with revised service information. For Group 1 airplanes identified in Boeing Alert Service Bulletin 737–53A1204, Revision 1, dated March 26, 2007: Perform a detailed inspection for cracking of the intercostal web, attachment clips, and stringer splice channels; and a high frequency eddy current (HFEC) inspection for cracking of the stringer splice channels located forward and aft of the forward entry door; and do all applicable corrective actions before further flight; in accordance with Parts 1 and 2 of the Work Instructions of Boeing Special Attention Service Bulletin 737–53–1204, dated June 19, 2003, or Boeing Alert Service Bulletin 737–53A1204, Revision 1, dated March 26, 2007; or in accordance with Parts 1, 2, 4, and 5 of the Work Instructions of Boeing Alert Service Bulletin 737–53A1204, Revision 2, dated June 24, 2010. After September 9, 2009 (the effective date of AD 2009–16–14, Amendment 39–15987 (74 FR 38901, August 5, 2009), and until the effective date of this AD, Boeing Alert Service Bulletin 737–53A1204, Revision 1, dated March 26, 2007; or Boeing Alert Service Bulletin 737–53A1204, Revision 2, dated June 24, 2010; may be used to accomplish the actions required by this paragraph. As of the effective date of this AD, only Boeing Alert Service Bulletin 737–53A1204, Revision 2, dated June 24, 2010, may be used to accomplish the actions required by this paragraph.

(l) Retained Initial Inspection for Cargo Configuration Airplanes (Forward of the Forward Entry Door)

This paragraph restates the requirements of paragraph (i) of AD 2009–16–14, Amendment 39–15987 (74 FR 38901, August 5, 2009), with revised service information. For Group 2 cargo airplanes identified in Boeing Alert Service Bulletin 737–53A1204, Revision 1, dated March 26, 2007: Perform a detailed inspection for cracking of the intercostal webs and attachment clips located forward of the forward entry door, and do all applicable corrective actions before further flight, in accordance with Part 3 of the Work Instructions of Boeing Special Attention Service Bulletin 737–53–1204, dated June 19, 2003, or Boeing Alert Service Bulletin 737–53A1204, Revision 1, dated March 26, 2007; or in accordance with Part 3 of Boeing Alert Service Bulletin 737–53A1204, Revision 2, dated June 24, 2010. After September 9, 2009 (the effective date of AD 2009–16–14, Amendment 39–15987 (74 FR 38901, August 5, 2009), and until the effective date of this AD, Boeing Alert Service Bulletin 737–53A1204, Revision 1, dated March 26, 2007; or Boeing Alert Service Bulletin 737–53A1204, Revision 2, dated June 24, 2010; may be used to accomplish the actions required by this paragraph. As of the effective date of this AD, only Boeing Alert Service Bulletin 737–53A1204, Revision 2, dated June 24, 2010, may be used to accomplish the actions required by this paragraph.

(m) Retained Initial Inspection for Cargo Configuration Airplanes (Aft of the Forward Entry Door)

This paragraph restates the requirements of paragraph (j) of AD 2009–16–14, Amendment 39–15987 (74 FR 38901, August 5, 2009), with revised service information. For Group 2 cargo airplanes identified in Boeing Alert Service Bulletin 737–53A1204, Revision 1, dated March 26, 2007: Perform a detailed inspection for cracking of the intercostal webs and attachment clips located aft of the forward entry door, and do all applicable corrective actions before further flight, in accordance with Part 4 of the Work Instructions of Boeing Alert Service Bulletin 737–53A1204, Revision 1, dated March 26, 2007; or in accordance with Part 3 of Boeing Alert Service Bulletin 737–53A1204, Revision 2, dated June 24, 2010. As of the effective date of this AD, only Boeing Alert Service Bulletin 737–53A1204, Revision 2, dated June 24, 2010, may be used to accomplish the actions required by this paragraph.

(n) Retained Repeat Inspections

This paragraph restates the requirements of paragraph (k) of AD 2009–16–14, Amendment 39–15987 (74 FR 38901, August 5, 2009). Repeat the inspections required by paragraphs (k), (l), and (m) of this AD thereafter at intervals not to exceed 6,000 flight cycles after the previous inspection, or within 3,000 flight cycles after September 9, 2009 (the effective date of AD 2009–1614), whichever occurs later.

(o) Retained Exceptions to Boeing Special Attention Service Bulletin 737–53–1204

This paragraph restates the requirements of paragraph (l) of AD 2009–16–14, Amendment 39–15987 (74 FR 38901, August 5, 2009), with revised service information. Do the actions required by paragraphs (i), (j), (k), (l), (m), and (n) of this AD by accomplishing all the applicable actions specified in the Accomplishment Instructions of Boeing Special Attention Service Bulletin 737–53–1204, dated June 19, 2003; Boeing Alert Service Bulletin 737–53A1204, Revision 1, dated March 26, 2007; or Boeing Alert Service Bulletin 737–53A1204, Revision 2, dated June 24, 2010; except as provided by paragraphs (o)(1) and (o)(2) of this AD. After September 9, 2009 (the effective date of AD 2009–16–14), and until the effective date of this AD, Boeing Alert Service Bulletin 737–53A1204, Revision 1, dated March 26, 2007; or Boeing Alert Service Bulletin 737–53A1204, Revision 2, dated June 24, 2010; may be used to accomplish the actions required by this paragraph. As of the effective date of this AD, only Boeing Alert Service Bulletin 737–53A1204, Revision 2, dated June 24, 2010, may be used to accomplish the actions required by this paragraph.

(1) Where Boeing Special Attention Service Bulletin 737–53–1204, dated June 19, 2003; Boeing Alert Service Bulletin 737–53A1204, Revision 1, dated March 26, 2007; or Boeing Alert Service Bulletin 737–53A1204, Revision 2, dated June 24, 2010; specifies to contact Boeing for repair instructions: Before further flight, repair using a method approved in accordance with the procedures specified in paragraph (t) of this AD.

(2) Where Boeing Special Attention Service Bulletin 737–53–1204, dated June 19, 2003; or Boeing Alert Service Bulletin 737–53A1204, Revision 1, dated March 26, 2007; specifies a compliance time relative to the date of a service bulletin, this AD requires compliance relative to September 9, 2009 (the effective date of AD 2009–16–14, Amendment 39–15987 (74 FR 38901, August 5, 2009). Where Boeing Special Attention Service Bulletin 737–53–1204, dated June 19, 2003; or Boeing Alert Service Bulletin 737–53A1204, Revision 1, dated March 26, 2007; specifies a compliance time relative to the date of the initial release of a service bulletin, this AD requires compliance relative to November 1, 2005 (the effective date of AD 2005–20–03, Amendment 39–14296 (70 FR 56361, September 27, 2005)).

(p) New One-Time Inspection for Missing Fasteners at STA 348.2

For Groups 2 and 3 airplanes identified in Boeing Alert Service Bulletin 737–53A1240, Revision 1, dated June 29, 2010: Within 4,500 flight cycles after the effective date of this AD, do a detailed inspection to detect missing fasteners of the STA 348.2 frame, in accordance with the Accomplishment Instructions of Boeing Alert Service Bulletin 737–53A1240, Revision 1, dated June 29, 2010, except as required by paragraph (r) of this AD. If any fastener is missing, before further flight, repair using a method approved in accordance with the procedures specified in paragraph (t) of this AD.

(q) New Initial and Repetitive Inspections at STA 348.2 for Model 737–100, –200, –300, –400, and –500 Series Airplanes

For Groups 2 and 3 airplanes identified in Boeing Alert Service Bulletin 737–53A1240, Revision 1, dated June 29, 2010: Before the accumulation of 15,000 total flight cycles, or within 4,500 flight cycles after the effective date of this AD, whichever occurs later, do HFEC and surface eddy current inspections for cracking of the frame, HFEC inspections for cracking of the reinforcement angle and shear web, and a detailed inspection for cracking of the STA 348.2 frame outer chord, inner chord, and reinforcement angle, in accordance with the Accomplishment Instructions of Boeing Alert Service Bulletin 737–53A1240, Revision 1, dated June 29, 2010, except as required by paragraph (r) of this AD. If any crack is found during any inspection required by this paragraph, before further flight, do all applicable corrective actions in accordance with the Accomplishment Instructions of Boeing Alert Service Bulletin 737–53A1240, Revision 1, dated June 29, 2010, except as required by paragraph (r) of this AD, and except where that service bulletin specifies to contact Boeing, before further flight, repair using a method approved in accordance with the procedures specified in paragraph (t) of this AD. Repeat the inspections thereafter at intervals not to exceed 6,000 flight cycles.

(r) New Exceptions to Boeing Alert Service Bulletins 737–53A1204 and 737–53A1240

(1) Note 1 of paragraph 3.A of the Accomplishment Instructions of Boeing Alert Service Bulletin 737–53A1240, Revision 1, dated June 29, 2010, is to be disregarded when accomplishing the actions required by this AD.

(2) The access and restoration instructions identified in the Work Instructions of Boeing Alert Service Bulletin 737–53A1204, Revision 2, dated June 24, 2010; and Boeing Alert Service Bulletin 737–53A1240, Revision 1, dated June 29, 2010; are not required by this AD. Operators may perform those actions in accordance with approved maintenance procedures.

(3) The use of Boeing Drawing 65–88700 is not allowed when accomplishing the actions required by this AD in accordance with the Work Instructions of Boeing Alert Service Bulletin 737–53A1204, Revision 2, dated June 24, 2010; and Boeing Alert Service Bulletin 737–53A1240, Revision 1, dated June 29, 2010.

(s) New Initial and Repetitive Inspections of the S–15L Aft Intercostal and Cargo Barrier Net Fitting for Model 737–200C Series Airplanes

For Group 2 airplanes identified in Boeing Alert Service Bulletin 737–53A1204, Revision 2, dated June 24, 2010: Before the accumulation of 15,000 total flight cycles, or within 4,500 flight cycles after the effective date of this AD, whichever occurs later, do initial detailed and HFEC inspections for cracking of the S–15L aft intercostal between BS 348.2 and BS 360, and do a detailed inspection of the cargo barrier net fitting at the intercostal, in accordance with Figure 3 of the Accomplishment Instructions of Boeing Alert Service Bulletin 737–53A1204, Revision 2, dated June 24, 2010. If any cracking is found, before further flight repair using a method approved in accordance with the procedures specified in paragraph (t) of this AD. Repeat the inspections thereafter at intervals not to exceed 6,000 flight cycles.

(t) Alternative Methods of Compliance (AMOCs)

(1) The Manager, Seattle ACO, FAA, has the authority to approve AMOCs for this AD, if requested using the procedures found in 14 CFR 39.19. In accordance with 14 CFR 39.19, send your request to your principal inspector or local Flight Standards District Office, as appropriate. If sending information directly to the manager of the ACO, it may be emailed to: *9-ANM-Seattle-ACO-AMOC-Requests@faa.gov.*

(2) Before using any approved AMOC, notify your appropriate principal inspector, or lacking a principal inspector, the manager of the local flight standards district office/certificate holding district office.

(3) An AMOC that provides an acceptable level of safety may be used for any repair required by this AD if it is approved by the Boeing Commercial Airplanes Organization Designation Authorization (ODA) that has been authorized by the Manager, Seattle ACO to make those findings. For a repair method to be approved, the repair must meet the certification basis of the airplane, and the approval must specifically refer to this AD.

(4) AMOCs approved previously in accordance with AD 2004–09–09, Amendment 39–13598 (69 FR 23646, April 30, 2004), are approved as AMOCs for the corresponding requirements of this AD.

(5) AMOCs approved previously in accordance with AD 2005–20–03, Amendment 39–14296 (70 FR 56361, September 27, 2005), are approved as AMOCs for the corresponding requirements of this AD, provided the repetitive inspection intervals (if any) do not exceed 6,000 flight cycles.

(6) AMOCs approved previously in accordance with AD 2009–16–14, Amendment 39–15987 (74 FR 38901, August 5, 2009), are approved as AMOCs for the corresponding requirements of this AD.

(u) Related Information

For more information about this AD, contact Alan Pohl, Aerospace Engineer, Airframe Branch, ANM–120S, FAA, Seattle ACO, 1601 Lind Avenue SW., Renton, Washington 98057–3356; phone (425) 917–6450; fax (425) 917–6590; email: *Alan.Pohl@faa.gov.*

(v) Material Incorporated by Reference

(1) The Director of the Federal Register approved the incorporation by reference (IBR) under 5 U.S.C. 552(a) and 1 CFR part 51.

(2) You must use the following service information to do the actions required by this AD, unless the AD specifies otherwise.

(3) The following service information was approved for IBR on July 23, 2012.

(i) Boeing Alert Service Bulletin 737–53A1240, Revision 1, dated June 29, 2010.

(ii) Boeing Alert Service Bulletin 737–53A1204, Revision 2, dated June 24, 2010.

(4) The following service information was approved for IBR on September 9, 2009 (74 FR 38901, August 5, 2009).

(i) Boeing Alert Service Bulletin 737–53A1204, Revision 1, dated March 26, 2007.

(5) The following service information was approved for IBR on November 1, 2005 (70 FR 56361, September 27, 2005).

(i) Boeing Special Attention Service Bulletin 737–53–1204, dated June 19, 2003.

(6) The following service information was approved for IBR on June 4, 2004 (69 FR 23646, April 30, 2004).

(i) Boeing Alert Service Bulletin 737–53A1240, dated April 10, 2003.

(7) For service information identified in this AD, contact Boeing Commercial Airplanes, Attention: Data & Services Management, P. O. Box 3707, MC 2H–65, Seattle, Washington 98124–2207; telephone 206–544–5000, extension 1; fax 206–766–5680; Internet *https://www.myboeingfleet.com.*

(8) You may review copies of the referenced service information at the FAA, Transport Airplane Directorate, 1601 Lind Avenue SW., Renton, Washington. For information on the availability of this material at the FAA, call 425–227–1221.

(9) You may also review copies of the service information that is incorporated by reference at the National Archives and Records Administration (NARA). For information on the availability of this material at NARA, call 202–741–6030, or go to: *http://www.archives.gov/federal-register/cfr/ibr_locations.html.*

Issued in Renton, Washington, on June 4, 2012.

Michael Kaszycki,

Acting Manager, Transport Airplane Directorate, Aircraft Certification Service.

[FR Doc. 2012–14373 Filed 6–15–12; 8:45 am]

BILLING CODE 4910–13–P

DEPARTMENT OF TRANSPORTATION

Federal Aviation Administration

14 CFR Part 39

[Docket No. FAA–2011–1415; Directorate Identifier 2011–NM–145–AD; Amendment 39–17089; AD 2012–12–09]

RIN 2120–AA64

Airworthiness Directives; The Boeing Company Airplanes

AGENCY: Federal Aviation Administration (FAA), DOT.

ACTION: Final rule.

SUMMARY: We are adopting a new airworthiness directive (AD) for all The Boeing Company Model 717–200 airplanes. This AD was prompted by reports of cracks found on the center section ribs of the horizontal stabilizers. This AD requires repetitive inspections for cracking of the aft face of the left and right rib hinge bearing lugs of the center

section of the horizontal stabilizer; and crack measurement, repairs, post-repair repetitive inspections, and installation of a new center section rib if necessary. We are issuing this AD to detect and correct cracking in the left and right bearing lugs of the rib hinge spreading at the same time, which could result in failure of both hinge bearing lugs. Failure of the hinge bearing lugs could result in the inability of the horizontal stabilizer to sustain flight loads and thereby reduce the controllability of the airplane.

DATES: This AD is effective July 23, 2012.

The Director of the Federal Register approved the incorporation by reference of a certain publication listed in the AD as of July 23, 2012.

ADDRESSES: For service information identified in this AD, contact Boeing Commercial Airplanes, Attention: Data & Services Management, 3855 Lakewood Boulevard, MC D800–0019, Long Beach, California 90846–0001; phone: 206–544–5000, extension 2; fax: 206–766–5683; Internet: *https://www.myboeingfleet.com.* You may review copies of the referenced service information at the FAA, Transport Airplane Directorate, 1601 Lind Avenue SW., Renton, Washington. For information on the availability of this material at the FAA, call 425–227–1221.

Examining the AD Docket

You may examine the AD docket on the Internet at *http://www.regulations.gov;* or in person at the Docket Management Facility between 9 a.m. and 5 p.m., Monday through Friday, except Federal holidays. The AD docket contains this AD, the regulatory evaluation, any comments received, and other information. The address for the Docket Office (phone: 800–647–5527) is Document Management Facility, U.S. Department of Transportation, Docket Operations, M–30, West Building Ground Floor, Room W12–140, 1200 New Jersey Avenue SE., Washington, DC 20590.

FOR FURTHER INFORMATION CONTACT: George Garrido, Aerospace Engineer, Airframe Branch, ANM–120L, FAA, Los Angeles Aircraft Certification Office (ACO), 3960 Paramount Boulevard, Lakewood, California 90712–4137; phone: 562–627–5357; fax: 562–627–5210; email: *George.Garrido@faa.gov.*

SUPPLEMENTARY INFORMATION:

Discussion

We issued a notice of proposed rulemaking (NPRM) to amend 14 CFR part 39 to include an AD that would apply to the specified products. That NPRM published in the **Federal Register** on January 19, 2012 (77 FR 2664). That NPRM proposed to require repetitive eddy current high frequency (ETHF) inspections for cracks on the aft face on the left and right rib hinge bearing lugs of the center section of the horizontal stabilizer; and crack measurement, repairs, post-repair repetitive inspections, and installation of a new center section rib if necessary.

Comments

We gave the public the opportunity to participate in developing this AD. The following presents the comments received on the proposal (77 FR 2664, January 19, 2012), and the FAA's response to each comment.

Support for NPRM (77 FR 2664, January 19, 2012)

Boeing stated it supports the NPRM (77 FR 2664, January 19, 2012).

Request To Decrease Inspection Interval

Kristianna Sciarraa requested we change the repetitive inspection interval in the NPRM (77 FR 2664, January 19, 2012) from every 10,500 flight cycles to every 18 months when no cracking is found after the initial inspection. The commenter stated that more frequent inspections would increase early detection of fatigue cracking and would be workable with operator schedules. The commenter also stated that the costs associated with the decreased inspection interval are minimal when compared to the cost to an operator if an accident occurs due to fatigue cracking.

We disagree with changing the repetitive inspection interval because the repetitive inspection interval is based on damage tolerance (crack growth) analysis of the hinge bearing lug of the horizontal stabilizer center section. The analysis accounts for the loading and stress in the specific location and considers worse case crack growth from detectable to critical size and allows for multiple opportunities to detect a crack. We have not changed the final rule in this regard.

Request To Require Reporting

Kristianna Sciarraa requested we include mandatory reporting of inspection results in the NPRM (77 FR 2664, January 19, 2012). The commenter stated that Boeing Alert Service Bulletin 717–55A0011, dated May 17, 2011, specifies reporting and that providing the manufacturer with such information would foster an important exchange of information with an end goal of creating safe and reliable aircraft to ensure passenger and operator protection.

We disagree with requiring mandatory reporting of inspection results. Boeing Alert Service Bulletin 717–55A0011, dated May 17, 2011, already specifies submitting information to the manufacturer. This final rule does not include that requirement because we understand the unsafe condition, and we do not want to add an additional burden on the operators. We require reporting of inspection reports if the unsafe condition is a result of quality control issues or if we are trying to understand the scope of the unsafe condition. We have not changed the final rule in this regard.

Conclusion

We reviewed the relevant data, considered the comments received, and determined that air safety and the public interest require adopting the AD as proposed.

Costs of Compliance

We estimate that this AD affects 129 airplanes of U.S. registry.

We estimate the following costs to comply with this AD:

ESTIMATED COSTS

Action	Labor cost	Parts cost	Cost per product	Cost on U.S. operators
ETHF Inspection	6 work-hours × $85 per hour = $510 per inspection cycle.	$0	$510 per inspection cycle	$65,790 per inspection cycle.

We have received no definitive data that would enable us to provide cost estimates for the on-condition labor costs specified in this AD. The estimated parts cost for a replacement rib is $16,387.

Authority for This Rulemaking

Title 49 of the United States Code specifies the FAA's authority to issue

rules on aviation safety. Subtitle I, section 106, describes the authority of the FAA Administrator. Subtitle VII: Aviation Programs, describes in more detail the scope of the Agency's authority.

We are issuing this rulemaking under the authority described in Subtitle VII, Part A, Subpart III, Section 44701: ''General requirements.'' Under that section, Congress charges the FAA with promoting safe flight of civil aircraft in air commerce by prescribing regulations for practices, methods, and procedures the Administrator finds necessary for safety in air commerce. This regulation is within the scope of that authority because it addresses an unsafe condition that is likely to exist or develop on products identified in this rulemaking action.

Regulatory Findings

This AD will not have federalism implications under Executive Order 13132. This AD will not have a substantial direct effect on the States, on the relationship between the national government and the States, or on the distribution of power and responsibilities among the various levels of government.

For the reasons discussed above, I certify that this AD:

(1) Is not a ''significant regulatory action'' under Executive Order 12866,

(2) Is not a ''significant rule'' under DOT Regulatory Policies and Procedures (44 FR 11034, February 26, 1979),

(3) Will not affect intrastate aviation in Alaska, and

(4) Will not have a significant economic impact, positive or negative, on a substantial number of small entities under the criteria of the Regulatory Flexibility Act.

List of Subjects in 14 CFR Part 39

Air transportation, Aircraft, Aviation safety, Incorporation by reference, Safety.

Adoption of the Amendment

Accordingly, under the authority delegated to me by the Administrator, the FAA amends 14 CFR part 39 as follows:

PART 39—AIRWORTHINESS DIRECTIVES

■ 1. The authority citation for part 39 continues to read as follows:

Authority: 49 U.S.C. 106(g), 40113, 44701.

§ 39.13 [Amended]

■ 2. The FAA amends § 39.13 by adding the following new airworthiness directive (AD):

2012–12–09 The Boeing Company: Amendment 39–17089; Docket No. FAA–2011–1415; Directorate Identifier 2011–NM–145–AD.

(a) Effective Date

This AD is effective July 23, 2012.

(b) Affected ADs

None.

(c) Applicability

This AD applies to all The Boeing Company Model 717–200 airplanes, certificated in any category.

(d) Subject

Joint Aircraft System Component (JASC)/ Air Transport Association (ATA) of America Code 5510, Horizontal Stabilizer Structure.

(e) Unsafe Condition

This AD was prompted by reports of cracks found on the center section ribs of the horizontal stabilizers. We are issuing this AD to detect and correct cracking in the left and right bearing lugs of the rib hinge spreading at the same time, which could result in failure of both hinge bearing lugs. Failure of the hinge bearing lugs could result in the inability of the horizontal stabilizer to sustain flight loads and thereby reduce the controllability of the airplane.

(f) Compliance

Comply with this AD within the compliance times specified, unless already done.

(g) Repetitive Eddy Current High Frequency (ETHF) Inspections

Before the accumulation of 35,000 total flight cycles, or within 8,275 flight cycles after the effective date of this AD, whichever occurs later: Do an ETHF inspection for cracks of the aft face on the left and right rib hinge bearing lugs of the center section of the horizontal stabilizer, in accordance with the Accomplishment Instructions of Boeing Alert Service Bulletin 717–55A0011, dated May 17, 2011. If no crack is found, repeat the inspection thereafter at intervals not to exceed 10,500 flight cycles.

(h) Crack Measurement

If any crack is found during any inspection required by paragraph (g) of this AD: Before further flight, measure the length of the crack, in accordance with the Accomplishment Instructions of Boeing Alert Service Bulletin 717–55A0011, dated May 17, 2011.

(i) Blend Out Repair, ETHF Inspections, and Corrective Action for Certain Crack Lengths

For any crack that meets ''Condition 2A'' of Table 1 of 1.E., ''Compliance,'' of Boeing Alert Service Bulletin 717–55A0011, dated May 17, 2011: Do the actions in paragraphs (i)(1) and (i)(2) of this AD.

(1) Before further flight, do a blend out repair, in accordance with the Accomplishment Instructions of Boeing Alert Service Bulletin 717–55A0011, dated May 17, 2011.

(2) Within 14,200 flight cycles after accomplishing the blend out repair required by paragraph (i)(1) of this AD: Do an ETHF inspection of the blend out repair area for cracking, in accordance with the Accomplishment Instructions of Boeing Alert Service Bulletin 717–55A0011, dated May 17, 2011. If no cracking is found, repeat the inspection thereafter at intervals not to exceed 5,400 flight cycles.

(i) If any crack is found during the ETHF inspection required by paragraph (i)(2) of this AD: Before further flight, remove the cracked center section rib of the horizontal stabilizer and install a new center section rib, in accordance with the Accomplishment Instructions of Boeing Alert Service Bulletin 717–55A0011, dated May 17, 2011.

(ii) Within 35,000 flight cycles after the installation of the new center section rib, do the actions in paragraph (g) of this AD.

(j) Corrective Action for Certain Crack Lengths

For any crack that meets ''Condition 2D'' of Table 1 of 1.E., ''Compliance,'' of Boeing Alert Service Bulletin 717–55A0011, dated May 17, 2011: Before further flight, remove the cracked center section rib of the horizontal stabilizer and install a new center section rib, in accordance with the Accomplishment Instructions of Boeing Alert Service Bulletin 717–55A0011, dated May 17, 2011. Within 35,000 flight cycles after the installation of the new rib, do the actions in paragraph (g) of this AD.

(k) No Reporting Requirement

Although Boeing Alert Service Bulletin 717–55A0011, dated May 17, 2011, specifies to submit certain information to the manufacturer, this AD does not include that requirement.

(l) Alternative Methods of Compliance (AMOCs)

(1) The Manager Los Angeles Aircraft Certification Office (ACO), FAA, has the authority to approve AMOCs for this AD, if requested using the procedures found in 14 CFR 39.19. In accordance with 14 CFR 39.19, send your request to your principal inspector or local Flight Standards District Office, as appropriate. If sending information directly to the manager of the ACO, send it to the attention of the person identified in the Related Information section of this AD.

(2) Before using any approved AMOC, notify your appropriate principal inspector, or lacking a principal inspector, the manager of the local flight standards district office/ certificate holding district office.

(3) An AMOC that provides an acceptable level of safety may be used for any repair required by this AD if it is approved by the Boeing Commercial Airplanes Organization Designation Authorization (ODA) that has been authorized by the Manager, Los Angeles ACO, to make those findings. For a repair method to be approved, the repair must meet the certification basis of the airplane, and the approval must specifically refer to this AD.

(m) Related Information

For more information about this AD, contact George Garrido, Aerospace Engineer, Airframe Branch, ANM–120L, FAA, Los Angeles Aircraft Certification Office (ACO), 3960 Paramount Boulevard, Lakewood,

California 90712–4137; phone: 562–627–5357; fax: 562–627–5210; email: *George.Garrido@faa.gov.*

(n) Material Incorporated by Reference

(1)You must use the following service information to do the actions required by this AD, unless the AD specifies otherwise. The Director of the Federal Register approved the incorporation by reference (IBR) of the following service information under 5 U.S.C. 552(a) and 1 CFR part 51.

(i) Boeing Alert Service Bulletin 717–55A0011, dated May 17, 2011.

(2) For service information identified in this AD, contact Boeing Commercial Airplanes, Attention: Data & Services Management, 3855 Lakewood Boulevard, MC D800–0019, Long Beach, California 90846–0001; phone: 206–544–5000, extension 2; fax: 206–766–5683; Internet: *https://www.myboeingfleet.com.*

(3) You may review copies of the referenced service information at the FAA, Transport Airplane Directorate, 1601 Lind Avenue SW., Renton, Washington. For information on the availability of this material at the FAA, call 425–227–1221.

(4) You may also review copies of the service information that is incorporated by reference at the National Archives and Records Administration (NARA). For information on the availability of this material at NARA, call 202–741–6030, or go to: *http://www.archives.gov/federal-register/cfr/ibr-locations.html.*

Issued in Renton, Washington, on June 7, 2012.

Michael Kaszycki,

Acting Manager, Transport Airplane Directorate, Aircraft Certification Service.

[FR Doc. 2012–14542 Filed 6–15–12; 8:45 am]

BILLING CODE 4910–13–P

DEPARTMENT OF TRANSPORTATION

Federal Aviation Administration

14 CFR Part 39

[Docket No. FAA–2011–1170; Directorate Identifier 2010–NM–264–AD; Amendment 39–17080; AD 2012–12–01]

RIN 2120–AA64

Airworthiness Directives; Airbus Airplanes

AGENCY: Federal Aviation Administration (FAA), Department of Transportation (DOT).

ACTION: Final rule.

SUMMARY: We are superseding an existing airworthiness directive (AD) for all Airbus Model A300 B4–600, B4–600R and A300 F4–600R series airplanes, Model A300 C4–605R Variant F airplanes, and Model A310 series airplanes. That AD currently requires modifying the wiring in the right-hand electronics rack. This new AD requires replacing the cockpit multi-tank indicators (MTI), and for certain airplanes, replacing high-level, low-level, and overflow sensors and their harness connectors, and re-instating the low-level warning indication to the cockpit MTI. This AD was prompted by reports of failures of four fuel level sensor-amplifier and MTI units. This AD also adds Model A310 series airplanes to the applicability. We are issuing this AD to prevent degradation of the electrical insulation sleeves of the low-level indication lamps on the MTI, which could cause a short circuit that might result in high voltage being conveyed to the high- and low-level sensors in the wing tanks. This condition could cause the level sensor to heat above acceptable limits, possibly resulting in a fuel tank explosion, and consequent loss of the airplane.

DATES: This AD becomes effective July 23, 2012.

The Director of the Federal Register approved the incorporation by reference of certain publications listed in this AD as of July 23, 2012.

The Director of the Federal Register approved the incorporation by reference of a certain other publication listed in this AD as of March 27, 2009 (74 FR 7792, February 20, 2009).

ADDRESSES: You may examine the AD docket on the Internet at *http://www.regulations.gov* or in person at the U.S. Department of Transportation, Docket Operations, M–30, West Building Ground Floor, Room W12–140, 1200 New Jersey Avenue SE., Washington, DC.

FOR FURTHER INFORMATION CONTACT: Dan Rodina, Aerospace Engineer, International Branch, ANM–116, Transport Airplane Directorate, FAA, 1601 Lind Avenue SW., Renton, Washington 98057–3356; telephone (425) 227–2125; fax (425) 227–1149.

SUPPLEMENTARY INFORMATION:

Discussion

We issued a notice of proposed rulemaking (NPRM) to amend 14 CFR part 39 to include an AD that would apply to the specified products. That NPRM was published in the **Federal Register** on November 7, 2011 (76 FR 68671), and proposed to supersede AD 2009–02–04, Amendment 39–15794 (74 FR 7792, February 20, 2009). That NPRM proposed to correct an unsafe condition for the specified products. The MCAI states:

> One operator experienced failures of four Fuel Level Sensor-Amplifier (FLSA) and Multi Tank Indicators (MTI) units. FLSA and MTI failures have been identified as having been caused by incorrect connector sleeves materials fitted to the MTI units.
>
> Degradation of the electrical insulation sleeves of the Low-level indication lamps on the MTI of the flight deck can cause a short circuit that might result in high voltage being conveyed to the high and low level sensors in the wing tanks. This condition, if not corrected, could cause the level sensor to heat above acceptable limits, possibly resulting in fuel tank explosion, and consequent loss of the aeroplane.
>
> As an interim action, EASA AD 2008–0055 [which corresponds to FAA AD 2009–02–04, Amendment 39–15794 (74 FR 7792, February 20, 2009)], was issued requiring the accomplishment of wiring modifications to protect the FLSA and the Flight Warning Computers from 115V [volt] AC [alternating current] and 28V DC [direct current] short circuits within the cockpit MTI.
>
> EASA AD 2009–0144, which required the replacement of the affected sensors and their harness connectors with modified units in accordance with the instructions of Airbus Service Bulletin (SB) A300–28–6095 at original issue or SB A300–28–9013 at original issue, as applicable, was further on cancelled because the installation of the new inner tank fused low-level sensors was not possible, due to interference between some sensors and a fuel pipe at connector level.
>
> Airbus SB A300–28–6095 and SB A300–28–9013 have been revised to clear this interference. The replacement of the affected sensors and their harness connectors according to the instructions of these SBs is now possible.
>
> This [EASA] AD supersedes [EASA] AD 2008–0055 and introduces the following actions:
>
> —Expanding of the applicability to A310 aeroplanes; and
>
> —Replacement of the cockpit MTI with a MTI with silicone sleeves and to reinstate the low level warning indication to the cockpit MTI; and
>
> —Replacement of the affected sensors and their harness connectors by fused level sensor units for A300–600 and A300–600ST aeroplanes.

You may obtain further information by examining the MCAI in the AD docket.

Comments

We gave the public the opportunity to participate in developing this AD. We have considered the comments received.

Requests for Extension of Compliance Time

UPS requested that we extend the compliance time specified in paragraphs (h), (i), and (j) in the NPRM (76 FR 68671, November 7, 2011) to 60 months. UPS explained that the requested extended compliance time is to reduce the potential for special maintenance visits of its airplanes, and that a compliance period of less than 60 months will cause undue hardship on UPS and its operation, and result in significant negative economic impact.

UPS reasoned that it has an existing tank entry program that is completed only during airplane major maintenance visits at a 5-year time interval, and that using the existing interval will reduce the costs to open, purge, close, and check out the tanks. UPS explained further, that materials will take a minimum of 6 months to receive, and due to the extensive time waiting for parts, this will force even more airplanes into a special visit program in a much shorter period of time than what the NPRM is proposing.

UPS expressed that it agrees with the FAA when the premise for establishing a timeline for completion of an SFAR (Special Federal Aviation Regulation) 88 project is based on a level of safety as determined by the NPRM (76 FR 68671, November 7, 2011) and that it believes there is a timeframe precedence that has previously been set by the FAA for a project of this type. UPS explained that the FAA released an earlier AD, which corrected similar actions to the NPRM (76 FR 68671, November 7, 2011), and that the earlier AD had a 5-year compliance requirement. UPS believes that the same level of safety is achieved with a 5-year compliance on the Model A300 airplanes fleet.

FedEx requested that we extend the compliance time in the NPRM (76 FR 68671, November 7, 2011) to 30 months, to allow for the accomplishment of the work to be performed at a scheduled heavy maintenance event. FedEx explained that it accomplishes a heavy maintenance check on its Model A300–600 and A310 airplanes every 30 months. FedEx reasoned that it would be 22 hours per airplane to accomplish the requirements of the service information and that it is a significant economic and operational hardship for it to ''special visit'' airplanes to accomplish fuel tank entry.

We do not agree to extend the compliance time in this final rule. In developing an appropriate compliance time for this action, we considered the urgency associated with the subject unsafe condition, the availability of required parts, and the practical aspect of accomplishing the required modification within a period of time that corresponds to the normal scheduled maintenance for most affected operators. Under the provisions of paragraph (m) of the final rule, we will consider requests for approval of an extension of the compliance time if sufficient data are submitted to substantiate that the new compliance time would provide an acceptable level of safety. We have not changed the AD in this regard.

Requests for Revision to Costs of Compliance

UPS requested that we revise the Costs of Compliance section in the NPRM (76 FR 68671, November 7, 2011). UPS explained that it has determined that the required hours to complete the NPRM are greater than 150 hours and that the material kits that are required by Airbus Mandatory Service Bulletin A300–28–6095, Revision 01, dated February 2, 2010, are approximately $40,000 each, which is a total of $52,750 per airplane. UPS reasoned that the completion of the modification on the 53 UPS Model A300 airplanes will be approximately $2,795,750, which is a significant negative economic impact on UPS. UPS expressed that the proposed cost in the NPRM is only 7.5 percent of the actual cost that UPS will incur and that the actual costs will be greater than 13 times the cost estimates proposed in the NPRM.

FedEx requested that we acknowledge that there is an additional material cost and that our Costs of Compliance section in the NPRM (76 FR 68671, November 7, 2011) is underestimated in terms of financial impact to the operator. FedEx reasoned that the estimated parts cost for accomplishment of Airbus Mandatory Service Bulletin A300–28–6095, Revision 01, dated February 2, 2010, only includes the Airbus manufactured hardware kit (P/N 286095B01R01). FedEx explained that in order to complete the modification, a separate Intertechnique kit that includes the actual sensors and harness connectors must be procured, and that Airbus Mandatory Service Bulletin A300–28–6095, Revision 01, dated February 2, 2010, provides no warranty information or pricing for the additional required kit. FedEx expressed that it is in the process of obtaining price information for the additional required Intertechnique kits and will provide the data when it becomes available.

We agree to revise the Costs of Compliance section in this final rule for the reasons stated by the commenters. We have revised the Costs of Compliance section of the final rule to include the average costs of parts from Intertechnique.

Revised Paragraph Header and Wording

We have revised the heading for and the wording in paragraph (k) of this AD and the wording of paragraph (g) of this AD; these changes have not affected the intent of those paragraphs.

Conclusion

We reviewed the available data, including the comments received, and determined that air safety and the public interest require adopting the AD with the changes described previously—except for minor editorial changes. We have determined that these minor changes:

- Are consistent with the intent that was proposed in the NPRM (76 FR 68671, November 7, 2011) for correcting the unsafe condition; and
- Do not add any additional burden upon the public than was already proposed in the NPRM (76 FR 68671, November 7, 2011).

Costs of Compliance

We estimate that this AD will affect about 210 products of U.S. registry. The actions that are required by AD 2009–02–04, Amendment 39–15794 (74 FR 7792, February 20, 2009), and retained in this AD take about 5 work-hours per product, at an average labor rate of $85 per work-hour. Required parts cost about $0 per product. Based on these figures, the estimated cost of the currently required actions is $425 per product.

We estimate that it will take about 44 work-hours per product to comply with the new basic requirements of this AD. The average labor rate is $85 per work-hour. Required parts will cost about $39,000 per product. Where the service information lists required parts costs that are covered under warranty, we have assumed that there will be no charge for these parts. As we do not control warranty coverage for affected parties, some parties may incur costs higher than estimated here. Based on these figures, we estimate the cost of this AD to the U.S. operators to be $8,975,400, or $42,740 per product.

Authority for This Rulemaking

Title 49 of the United States Code specifies the FAA's authority to issue rules on aviation safety. Subtitle I, section 106, describes the authority of the FAA Administrator. ''Subtitle VII: Aviation Programs,'' describes in more detail the scope of the Agency's authority.

We are issuing this rulemaking under the authority described in ''Subtitle VII, Part A, Subpart III, Section 44701: General requirements.'' Under that section, Congress charges the FAA with promoting safe flight of civil aircraft in air commerce by prescribing regulations for practices, methods, and procedures the Administrator finds necessary for safety in air commerce. This regulation is within the scope of that authority

because it addresses an unsafe condition that is likely to exist or develop on products identified in this rulemaking action.

Regulatory Findings

We determined that this AD will not have federalism implications under Executive Order 13132. This AD will not have a substantial direct effect on the States, on the relationship between the national government and the States, or on the distribution of power and responsibilities among the various levels of government.

For the reasons discussed above, I certify that this AD:

1. Is not a ''significant regulatory action'' under Executive Order 12866;
2. Is not a ''significant rule'' under the DOT Regulatory Policies and Procedures (44 FR 11034, February 26, 1979);
3. Will not affect intrastate aviation in Alaska; and
4. Will not have a significant economic impact, positive or negative, on a substantial number of small entities under the criteria of the Regulatory Flexibility Act.

We prepared a regulatory evaluation of the estimated costs to comply with this AD and placed it in the AD docket.

Examining the AD Docket

You may examine the AD docket on the Internet at *http://www.regulations.gov;* or in person at the Docket Operations office between 9 a.m. and 5 p.m., Monday through Friday, except Federal holidays. The AD docket contains the NPRM (76 FR 68671, November 7, 2011), the regulatory evaluation, any comments received, and other information. The street address for the Docket Operations office (telephone (800) 647–5527) is in the **ADDRESSES** section. Comments will be available in the AD docket shortly after receipt.

List of Subjects in 14 CFR Part 39

Air transportation, Aircraft, Aviation safety, Incorporation by reference, Safety.

Adoption of the Amendment

Accordingly, under the authority delegated to me by the Administrator, the FAA amends 14 CFR part 39 as follows:

PART 39—AIRWORTHINESS DIRECTIVES

■ 1. The authority citation for part 39 continues to read as follows:

Authority: 49 U.S.C. 106(g), 40113, 44701.

§ 39.13 [Amended]

■ 2. The FAA amends § 39.13 by removing airworthiness directive (AD) 2009–02–04, Amendment 39–15794 (74 FR 7792, February 20, 2009), and adding the following new AD:

2012–12–01 Airbus: Amendment 39–17080. Docket No. FAA–2011–1170; Directorate Identifier 2010–NM–264–AD.

(a) Effective Date

This airworthiness directive (AD) becomes effective July 23, 2012.

(b) Affected ADs

This AD supersedes AD 2009–02–04, Amendment 39–15794 (74 FR 7792, February 20, 2009).

(c) Applicability

This AD applies to Airbus Model A300 B4–601, B4–603, B4–620, B4–622, B4–605R, B4–622R, F4–605R, F4–622R, and C4–605R Variant F airplanes, and Model A310–203, –204, –221, –222, –304, –322, –324, and –325 airplanes; certificated in any category; all certified models, all manufacturer serial numbers.

(d) Subject

Air Transport Association (ATA) of America Code 28: Fuel.

(e) Reason

This AD was prompted by reports of failures of four fuel level sensor-amplifier and multi-tank indicator (MTI) units. We are issuing this AD to prevent degradation of the electrical insulation sleeves of the low-level indication lamps on the MTI, which could cause a short circuit that might result in high voltage being conveyed to the high and low level sensors in the wing tanks. This condition could cause the level sensor to heat above acceptable limits, possibly resulting in a fuel tank explosion, and consequent loss of the airplane.

(f) Compliance

You are responsible for having the actions required by this AD performed within the compliance times specified, unless the actions have already been done.

(g) Retained Actions and Compliance Times

(1) This paragraph restates the actions and compliance times required by paragraph (f) of AD 2009–02–04, Amendment 39–15794 (74 FR 7792, February 20, 2009), with no changes. For Model A300–600 airplanes: Unless already done, within 3 months after March 27, 2009 (the effective date of AD 2009–02–04), modify the wiring in the right-hand electronics rack in accordance with the Accomplishment Instructions of Airbus Mandatory Service Bulletin A300–28A6096, Revision 02, dated July 4, 2008. Doing the required actions in paragraph (h) or (i) of this AD, as applicable, terminates the actions required by this paragraph.

(2) This paragraph provides credit for the modification required by paragraph (g)(1) of this AD, if the modification was performed before March 27, 2009 (the effective date of AD 2009–02–04) using Airbus Mandatory Service Bulletin A300–28A6096, dated October 19, 2007; or Revision 01, dated April 16, 2008.

(h) New Replacement and Re-Instatement for Certain Model A300–600 Series Airplanes With New Service Information

For Model A300–600 series airplanes on which Airbus modification 06213 has been embodied in production: Within 24 months after the effective date of this AD, do the actions required by paragraphs (h)(1), (h)(2), and (h)(3) of this AD. Doing the actions in this paragraph terminates the requirements of paragraph (g)(1) of this AD.

(1) Replace the cockpit MTI, in accordance with the Accomplishment Instructions of Airbus Mandatory Service Bulletin A300–28–6101, dated June 4, 2008.

(2) Before further flight after doing the replacement specified in paragraph (h)(1) of this AD: Replace the high-level, low-level, and overflow sensors and their harness connectors, with fused sensors and new harness connectors, in accordance with the Accomplishment Instructions of Airbus Mandatory Service Bulletin A300–28–6095, Revision 01, dated February 2, 2010.

(3) Before further flight after doing the replacement specified in paragraph (h)(2) of this AD: Re-instate the low-level warning indication to the cockpit MTI, in accordance with the Accomplishment Instructions of Airbus Mandatory Service Bulletin A300–28–6103, Revision 01, dated May 18, 2010.

(i) New Replacement and Re-Instatement for Certain Other Model A300–600 Series Airplanes

For Model A300–600 series airplanes on which Airbus modification 06213 has not been embodied in production: Within 24 months after the effective date of this AD, do the actions required by paragraphs (i)(1), (i)(2), and (i)(3) of this AD. Doing the actions in this paragraph terminates the requirements of paragraph (g)(1) of this AD.

(1) Replace the cockpit MTI, in accordance with the Accomplishment Instructions of Airbus Mandatory Service Bulletin A300–28–6101, dated June 4, 2008.

(2) Before further flight after doing the replacement specified in paragraph (i)(1) of this AD: Re-instate the low-level warning indication to the cockpit MTI, in accordance with the Accomplishment Instructions of Airbus Mandatory Service Bulletin A300–28–6103, Revision 01, dated May 18, 2010.

(3) Before further flight after doing the action specified in paragraph (i)(2) of this AD: Replace the high-level, low-level, and overflow sensors and their harness connectors, with fused sensors and new harness connectors, in accordance with the Accomplishment Instructions of Airbus Mandatory Service Bulletin A300–28–6095, Revision 01, dated February 2, 2010.

(j) New Replacement for Model A310 Series Airplanes

For Model A310 series airplanes: Within 24 months after the effective date of this AD, replace the cockpit MTI, in accordance with the Accomplishment Instructions of Airbus Mandatory Service Bulletin A310–28–2167, dated June 4, 2008.

(k) Credit for Previous Actions

This paragraph provides credit for the actions specified in paragraphs (h)(3) and

(i)(2) of this AD, if those actions were performed before the effective date of this AD using Airbus Mandatory Service Bulletin A300–28–6103, dated May 20, 2009.

(l) Parts Installation

As of the effective date of this AD, no person may install, on any airplane, any MTI in the cockpit location, unless it has been modified in accordance with the applicable service information listed in paragraphs (l)(1), (l)(2), (l)(3), (l)(4), (l)(5), and (l)(6) of this AD.

(1) Airbus Mandatory Service Bulletin A300–28–6101, dated June 4, 2008.

(2) Airbus Mandatory Service Bulletin A310–28–2167, dated June 4, 2008.

(3) GE Service Bulletin 1404KID–28–466, Revision 1, dated July 15, 2008.

(4) GE Service Bulletin 1406KID–28–467, Revision 1, dated July 15, 2008.

(5) GE Service Bulletin 1410KID–28–468, Revision 1, dated July 15, 2008.

(6) GE Service Bulletin 1420KID–28–469, Revision 1, dated July 23, 2008.

(m) Other FAA AD Provisions

The following provisions also apply to this AD:

(1) *Alternative Methods of Compliance (AMOCs):* The Manager, International Branch, ANM–116, Transport Airplane Directorate, FAA, has the authority to approve AMOCs for this AD, if requested using the procedures found in 14 CFR 39.19. In accordance with 14 CFR 39.19, send your request to your principal inspector or local Flight Standards District Office, as appropriate. If sending information directly to the International Branch, send it to ATTN: Dan Rodina, Aerospace Engineer, International Branch, ANM–116, Transport Airplane Directorate, FAA, 1601 Lind Avenue SW., Renton, Washington 98057–3356; telephone (425) 227–2125; fax (425) 227–1149. Information may be emailed to: *9-ANM-116-AMOC-REQUESTS@faa.gov.* Before using any approved AMOC, notify your appropriate principal inspector, or lacking a principal inspector, the manager of the local flight standards district office/certificate holding district office. The AMOC approval letter must specifically reference this AD.

(2) *Airworthy Product:* For any requirement in this AD to obtain corrective actions from a manufacturer or other source, use these actions if they are FAA-approved. Corrective actions are considered FAA-approved if they are approved by the State of Design Authority (or their delegated agent). You are required to assure the product is airworthy before it is returned to service.

(n) Related Information

Refer to MCAI European Aviation Safety Agency Airworthiness Directive 2010–0175, dated August 18, 2010, and the service information identified in paragraphs (n)(1), (n)(2), (n)(3), (n)(4), (n)(5), (n)(6), (n)(7), (n)(8), and (n)(9) of this AD, for related information.

(1) Airbus Mandatory Service Bulletin A300–28–6095, Revision 01, dated February 2, 2010.

(2) Airbus Mandatory Service Bulletin A300–28–6101, dated June 4, 2008.

(3) Airbus Mandatory Service Bulletin A300–28–6103, Revision 01, dated May 18, 2010.

(4) Airbus Mandatory Service Bulletin A300–28A6096, Revision 02, dated July 4, 2008.

(5) Airbus Mandatory Service Bulletin A310–28–2167, dated June 4, 2008.

(6) GE Service Bulletin 1404KID–28–466, Revision 1, dated July 15, 2008.

(7) GE Service Bulletin 1406KID–28–467, Revision 1, dated July 15, 2008.

(8) GE Service Bulletin 1410KID–28–468, Revision 1, dated July 15, 2008.

(9) GE Service Bulletin 1420KID–28–469, Revision 1, dated July 23, 2008.

(o) Material Incorporated by Reference

(1) You must use the following service information to do the actions required by this AD, unless the AD specifies otherwise. The Director of the Federal Register approved the incorporation by reference (IBR) of the following service information under 5 U.S.C. 552(a) and 1 CFR part 51 on the date specified.

(2) The following service information was approved for IBR on July 23, 2012:

(i) Airbus Mandatory Service Bulletin A300–28–6095, Revision 01, dated February 2, 2010.

(ii) Airbus Mandatory Service Bulletin A300–28–6101, dated June 4, 2008.

(iii) Airbus Mandatory Service Bulletin A300–28–6103, Revision 01, dated May 18, 2010.

(iv) Airbus Mandatory Service Bulletin A310–28–2167, dated June 4, 2008.

(v) GE Service Bulletin 1404KID–28–466, Revision 1, dated July 15, 2008.

(vi) GE Service Bulletin 1406KID–28–467, Revision 1, dated July 15, 2008.

(vii) GE Service Bulletin 1410KID–28–468, Revision 1, dated July 15, 2008.

(viii) GE Service Bulletin 1420KID–28–469, Revision 1, dated July 23, 2008.

(3) The following service information was approved for IBR on March 27, 2009 (74 FR 7792, February 20, 2009):

(i) Airbus Mandatory Service Bulletin A300–28A6096, Revision 02, dated July 4, 2008.

(4) For Airbus service information identified in this AD, contact Airbus SAS—EAW (Airworthiness Office), 1 Rond Point Maurice Bellonte, 31707 Blagnac Cedex, France; telephone +33 5 61 93 36 96; fax +33 5 61 93 44 51; email: *account.airworth-eas@airbus.com;* Internet *http://www.airbus.com.* For GE service information identified in this AD, contact GE Aviation, Customer Support Center, 1 Neumann Way, Cincinnati, Ohio 45215; telephone 513–552–3272; email *cs.techpubs@ge.com;* Internet *http://www.geaviation.com.*

(5) You may review copies of the service information at the FAA, Transport Airplane Directorate, 1601 Lind Avenue SW., Renton, Washington. For information on the availability of this material at the FAA, call 425–227–1221.

(6) You may also review copies of the service information that is incorporated by reference at the National Archives and Records Administration (NARA). For information on the availability of this material at an NARA facility, call 202–741–6030, or go to *http://www.archives.gov/federal_register/code_of_federal_regulations/ibr_locations.html.*

Issued in Renton, Washington, on May 31, 2012.

Michael Kaszycki,

Acting Manager, Transport Airplane Directorate, Aircraft Certification Service.

[FR Doc. 2012–14048 Filed 6–15–12; 8:45 am]

BILLING CODE 4910–13–P

FEDERAL TRADE COMMISSION

16 CFR Part 436

Disclosure Requirements and Prohibitions Concerning Franchising

AGENCY: Federal Trade Commission (FTC or Commission).

ACTION: Final rule amendments.

SUMMARY: The FTC announces revised monetary thresholds for three exemptions from the Franchise Rule. FTC is required to adjust the size of the monetary thresholds every fourth year based upon the Consumer Price Index for all urban consumers published by the Department of Labor.

DATES: This final rule is effective July 1, 2012.

FOR FURTHER INFORMATION CONTACT: Craig Tregillus, Franchise Rule Coordinator, Division of Marketing Practices, FTC, 600 Pennsylvania Avenue NW., Washington, DC 20580, (202) 326–2970, *ctregillus@ftc.gov.*

SUPPLEMENTARY INFORMATION: The FTC's Trade Regulation Rule entitled ''Disclosure Requirements and Prohibitions Concerning Franchising'' (Franchise Rule or Rule) [1] provides three exemptions based on a monetary threshold: the $500 ''minimum payment exemption,'' [2] the $1 million ''large franchise investment exemption'' [3] and the $5 million ''large franchisee exemption.'' [4] The Rule requires the Commission to ''adjust the size of the monetary thresholds every fourth year based upon the * * * Consumer Price Index for all urban consumers published by the Department of Labor.'' [5] This requirement, added by the 2007 amendments to the Rule, took effect on July 1, 2007, so that franchisors would have a one-year phase-in period within which to comply with the amended Rule's revised disclosure requirements

[1] 16 CFR Part 436.

[2] 16 CFR 436.8(a)(1).

[3] 16 CFR 436.8(a)(5)(i).

[4] 16 CFR 436.8(a)(5)(ii).

[5] 16 CFR 436.8(b).

before the July 1, 2008, final compliance deadline.[6]

Between 2007 and 2011, the annual average value of the Consumer Price Index for all urban consumers and all items increased by 8.49 percent—from an index value of 207.342 to a value of 224.939.[7] Applying the percentage increase to the three monetary thresholds increases the thresholds as follows:

Exemption	Original threshold	Adjusted threshold
Minimum Payment	$500	[8] $540
Large Franchise Investment	1,000,000	1,084,900
Large franchisee ...	5,000,000	5,424,500

Because the calculation of these thresholds is purely ministerial in nature and implements the Rule's mandatory adjustment mechanism, these adjustments are exempt from the rulemaking procedures specified in section 18 of the FTC Act.[9] In addition, the Commission has determined that notice and comment are unnecessary under the Administrative Procedure Act (APA) for the same reason. The Commission, therefore, has omitted notice and comment for good cause as provided by section 553(b)(B) of the APA.[10] For this reason, the requirements of the Regulatory Flexibility Act also do not apply.[11] Accordingly, the adjusted thresholds will take effect on July 1, 2012.

List of Subjects in 16 CFR Part 436

Advertising, Business and industry, Franchising, Trade practices.

Rule Amendments

For the reasons set out in the preamble of this document, the Federal Trade Commission amends 16 CFR Part 436 as follows:

[6] 72 FR 15444 (Mar. 30, 2007).

[7] Consumer Price Index, All Urban Consumers (''CPI–U''), *available at ftp://ftp.bls.gov/pub/special.requests/cpi/cpiai.txt.*

[8] The Commission has rounded this figure from $542.45 to $540 for compliance clarity and simplicity.

[9] *See* 15 U.S.C. 57a(d)(2)(B); 16 CFR 1.15(b) (providing that non-substantive amendments to trade regulation rules are exempt from the rulemaking procedures of Section 18 of the FTC Act).

[10] 5 U.S.C. 553(b)(B) (providing that ''good cause'' exists to forego notice and comment when public comment is unnecessary).

[11] 5 U.S.C. 603 and 604 (no regulatory flexibility analyses required where the APA does not require public comment).

PART 436—DISCLOSURE REQUIREMENTS AND PROHIBITIONS CONCERNING FRANCHISING

■ 1. The authority citation for part 436 continues to read as follows:

Authority: 15 U.S.C. 41–58.

■ 2. Amend ' 436.8 as follows:

■ a. In paragraph (a)(1), remove ''$500'' and, in its place, add ''$540'';

■ b. In paragraph (a)(5)(i), remove all references to ''$1 million'' and, in their place, add ''$1,084,900''; and

■ c. In paragraph (a)(5)(ii), remove ''$5 million'' and, in its place, add ''$5,424,500''.

By direction of the Commission.

Donald S. Clark,

Secretary.

[FR Doc. 2012–14785 Filed 6–15–12; 8:45 am]

BILLING CODE 6750–01–P

DEPARTMENT OF THE TREASURY

Internal Revenue Service

26 CFR Parts 20, 25, and 602

[TD 9593]

RIN 1545–BK34

Portability of a Deceased Spousal Unused Exclusion Amount

AGENCY: Internal Revenue Service (IRS), Treasury.

ACTION: Temporary regulations.

SUMMARY: This document contains temporary regulations that provide guidance on the estate and gift tax applicable exclusion amount, in general, as well as on the applicable requirements for electing portability of a deceased spousal unused exclusion (DSUE) amount to the surviving spouse and on the applicable rules for the surviving spouse's use of this DSUE amount. The statutory provisions underlying the portability rules were enacted as part of the Tax Relief, Unemployment Insurance Reauthorization, and Job Creation Act of 2010. The portability rules affect married spouses where the death of the first spouse to die occurs on or after January 1, 2011. The text of the temporary regulations also serves as the text of proposed regulations set forth in the notice of proposed rulemaking on this subject appearing elsewhere in this issue of the **Federal Register**.

DATES: *Effective Date.* These regulations are effective on June 15, 2012.

Applicability Dates: Sections of the temporary regulation relating to portability of a deceased spousal unused exclusion amount apply to estates of decedents dying on or after January 1, 2011. For specific dates of applicability, see §§ 20.2001–2T(b), 20.2010–1T(e), 20.2010–2T(e), 20.2010–3T(f), 25.2505–1T(e), and 25.2505–2T(g).

FOR FURTHER INFORMATION CONTACT: Karlene Lesho (202) 622–3090 (not a toll-free number).

SUPPLEMENTARY INFORMATION:

Paperwork Reduction Act

The collection of information contained in these regulations has been reviewed and, pending receipt and evaluation of public comments, approved by the Office of Management and Budget under control number 1545–0015. Responses to this collection of information are voluntary to obtain the benefit of being able to elect portability or to take advantage of the special reporting requirements applicable to certain assets, and, for certain estates, to opt out of a deemed portability election.

An agency may not conduct or sponsor, and a person is not required to respond to, a collection of information unless the collection of information displays a valid control number. For further information concerning this collection of information, and the address for the submission of comments on the collection of information and the accuracy of the estimated burden, and suggestions for reducing this burden, please refer to the preamble of the cross-referencing notice of proposed rulemaking published in the Proposed Rules section of this issue of the **Federal Register**.

Books and records relating to a collection of information must be retained as long as their contents may become material in the administration of any internal revenue law. Generally, tax returns and tax return information are confidential, as required by 26 U.S.C. 6103.

Background

On December 17, 2010, in section 303 of the Tax Relief, Unemployment Insurance Reauthorization, and Job Creation Act of 2010, Public Law 111–312 (124 Stat. 3296, 3302) (TRUIRJCA), Congress amended section 2010(c) of the Internal Revenue Code (Code) to allow portability of the applicable exclusion amount between spouses, and it made conforming amendments to sections 2505(a), 2631(c), and 6018(a)(1) of the Code. Section 303 of TRUIRJCA directs the Secretary to issue such regulations as may be necessary or appropriate to carry out section 303(a) of TRUIRJCA.

This document contains amendments to the Estate Tax Regulations (26 CFR part 20) under sections 2001 and 2010 of the Code and to the Gift Tax Regulations (26 CFR part 25) under section 2505 of the Code. The temporary regulations address not only the amendments made to section 2010(c) by TRUIRJCA and the conforming amendment to section 2505(a), but also the entirety of sections 2010 and 2505 of the Code for which there are no existing regulations. Finally, the amendment to the Estate Tax Regulations under section 2001 of the Code clarifies the application of the rule in section 2010(c)(5)(B) to section 2001 of the Code.

Section 303(a) of TRUIRJCA

Section 303(a) of TRUIRJCA amends section 2010(c) of the Code by striking paragraph (2) of section 2010(c) and adding new paragraphs (2) through (6) of section 2010(c). Section 2010(c)(2) now defines the applicable exclusion amount, used to determine the applicable credit amount, as the sum of the basic exclusion amount and, in the case of a surviving spouse, the DSUE amount. Section 2010(c)(3) provides that the basic exclusion amount is $5,000,000, to be adjusted for inflation in each year after calendar year 2011. Section 2010(c)(4) defines the DSUE amount to mean the lesser of (A) the basic exclusion amount or (B) the basic exclusion amount of the last deceased spouse of the surviving spouse, less the amount with respect to which the tentative tax is determined under section 2001(b)(1) on the estate of such deceased spouse.

Section 2010(c)(5) describes special rules relating to the portability of a DSUE amount. Section 2010(c)(5)(A) provides certain requirements that must be met to allow a surviving spouse to take into account a DSUE amount of a deceased spouse. In particular, the executor of the estate of the deceased spouse must file an estate tax return, compute the DSUE amount on such return, elect portability of the DSUE amount on such return, and ensure that such return is filed within the time prescribed by law (including extensions) for filing such return. Section 2010(c)(5)(B) allows the Secretary to examine a return of the deceased spouse to determine the DSUE amount, even after the expiration of the time provided under section 6501 for assessing a tax under chapter 11 or 12.

Section 2010(c)(6) directs the Secretary to prescribe regulations as may be necessary or appropriate to carry out section 2010(c).

Notice 2011–82

On October 17, 2011, the Department of the Treasury (Treasury) and the IRS issued Notice 2011–82 (2011–42 IRB 516) which can be found on *www.IRS.gov.* Notice 2011–82 alerts taxpayers to the requirements for the estate of a deceased spouse to elect portability of a DSUE amount. In addition, Notice 2011–82 announces that the estate of a deceased spouse will be deemed to elect portability of the DSUE amount by timely filing a complete and properly-prepared estate tax return, and that such return will be deemed to include a computation of the DSUE amount until such time as the IRS revises the estate tax return to expressly contain the DSUE amount computation. Notice 2011–82 also provides guidance to the estates of deceased spouses who choose not to make the portability election. Notice 2011–82 announces that Treasury and the IRS intend to issue regulations to implement section 303 of TRUIRJCA. Accordingly, Treasury and the IRS invited comments on a number of specific issues. Treasury and the IRS received comments on these issues, as well as additional issues identified by commenters. The comments are discussed in more detail in the ''Explanation of Provisions'' section of this preamble.

Notice 2012–21

On March 3, 2012, Treasury and the IRS issued Notice 2012–21 (2012–10 IRB 450) (which can be found on *www.IRS.gov*). Notice 2012–21 grants to qualifying estates a six-month extension of time for filing an estate tax return to elect portability of an unused exclusion amount provided that the qualifying estate files Form 4768, ''Application for Extension of Time to File a Return and/or Pay U.S. Estate (and Generation-Skipping Transfer) Taxes,'' within 15 months of the decedent's death. A qualifying estate is the estate of a person who died, survived by a spouse, during the first half of calendar year 2011, and whose gross estate has a fair market value that does not exceed $5 million. With the extension granted by this notice, the estate tax return must be filed within 15 months of the decedent's death.

Explanation of Provisions

1. Rules in Section 2010(a), (b), and (d) of the Code

The temporary regulations in § 20.2010–1T(a) state the general rule of section 2010(a) that an applicable credit amount will be allowed to the estate of every decedent against the estate tax imposed by section 2001. The temporary regulations in § 20.2010–1T(b) incorporate the rule in section 2010(b) relating to an adjustment to the applicable credit amount for certain gifts made before 1977. Finally, as provided in section 2010(d), the temporary regulations in § 20.2010–1T(c) limit the amount of the allowable credit so that it does not exceed the amount of the estate tax imposed by section 2001.

2. Explanation of Applicable Terms

The temporary regulations in § 20.2010–1T(d) define terms relevant to computing the credit amount allowable under section 2010. The relevant terms include *applicable credit amount, applicable exclusion amount, basic exclusion amount, DSUE amount,* and *last deceased spouse.*

3. Making the Portability Election

a. Election Required on Estate Tax Return

The temporary regulations in § 20.2010–2T(a) require an executor electing portability to make that election on a timely-filed estate tax return. The last return filed by the due date of the return, including extensions actually granted, will supersede any previously-filed return. Thus, an executor may supersede a previously-filed portability election on a subsequent timely-filed estate tax return if the executor satisfies the requirement in § 20.2010–2T(a)(3)(i). But see § 20.2010–2T(a)(6) when contrary elections are made by more than one person permitted to make the election. The temporary regulations in § 20.2010–2T(a)(4) provide that a portability election is irrevocable once the due date (as extended) of the return has passed.

b. Timely Filing Required

For a valid portability election, section 2010(c)(5) requires the executor to make the election on an estate tax return filed within the ''time prescribed by law'' (including extensions) for filing that return. Section 6075(a) requires the filing of an estate tax return made under section 6018(a) within 9 months of the date of the decedent's death. Section 6018(a) requires an estate tax return to be filed when the gross estate of a citizen or resident exceeds the excess (if any) of the basic exclusion amount in effect under section 2010(c) in the calendar year of the decedent's death over the sum of the decedent's adjusted taxable gifts as defined in section 2001(b) and the amount allowed to the decedent as a specific exemption under section 2521 as in effect prior to its repeal by the Tax Reform Act of 1976.

A commenter on Notice 2011–82 noted that neither section 2010(c)(5)(A) nor any other section of the Code provides a ''time prescribed by law'' for filing an estate tax return on behalf of a decedent's estate when the basic exclusion amount exceeds the value of the decedent's gross estate. Accordingly, the commenter requested that the regulations clarify the meaning of ''time prescribed by law'' as it applies in section 2010(c)(5)(A).

For executors who are required to file an estate tax return under section 6018(a), section 6075(a) requires the executor to file the estate tax return within nine months after the decedent's date of death. When an executor is not required to file an estate tax return under section 6018(a), the Code does not specify a due date for a return filed for the purpose of making the portability election. The temporary regulations in § 20.2010–2T(a)(1) require every estate electing portability of a decedent's DSUE amount to file an estate tax return within 9 months of the decedent's date of death, unless an extension of time for filing has been granted. (See Notice 2012–21 providing for an extension of time to file an estate tax return for the estates of certain decedents who died in the first half of calendar year 2011.) This timing requirement for filing a return applies to all estates electing portability regardless of the size of the gross estate. The temporary regulations provide in § 20.2010–2T(a)(1) that an estate choosing to elect portability will be considered for purposes of Subtitle B and Subtitle F of the Code to be required to file a return under section 6018(a).

This rule will benefit the IRS as well as taxpayers choosing the benefit of portability because the records required to compute and verify the DSUE amount are more likely to be available at the time of the death of the first deceased spouse than at the time of a subsequent transfer by the surviving spouse by gift or at death, which could occur many years later. This rule also is consistent with the ''Technical Explanation of the Revenue Provisions Contained in the 'Tax Relief, Unemployment Insurance Reauthorization, and Job Creation Act of 2010' Scheduled for Consideration by the United States Senate,'' J. Comm. On Taxation, 111th Cong., JCX–55–10 (Dec. 10, 2010) (Technical Explanation), which suggests that estates deciding to elect portability that are not otherwise required to file an estate tax return under section 6018(a) are intended to be subject to the same timely-filing requirements applicable to estates required to file an estate tax return under section 6018(a). The Technical Explanation states that the DSUE amount is available to a surviving spouse ''only if an election is made on a timely filed estate tax return (including extensions) of the predeceased spouse * * * regardless of whether the predeceased spouse otherwise is required to file an estate tax return.'' JCX–55–10, page 52; see also ''General Explanation of Tax Legislation Enacted in the 111th Congress,'' J. Comm. On Taxation, 111th Cong., JCS–2–11, pages 554–555 (March 2011) (General Explanation) (incorporating the same language from the Technical Explanation).

c. Portability Election Upon Filing of ''Complete and Properly-Prepared'' Estate Tax Return

Notice 2011–82 provides that the estate of a decedent dying after December 31, 2010, will be deemed to make the portability election upon the timely filing of a ''complete and properly-prepared'' estate tax return. The temporary regulations in § 20.2010–2T(a)(2) provide that the estate of a decedent (survived by a spouse) makes the portability election by timely filing a complete and properly-prepared estate tax return for the decedent's estate.

Several commenters responding to Notice 2011–82 requested that Treasury and the IRS define what is meant by a ''complete and properly-prepared'' estate tax return. Commenters further requested that Treasury and the IRS consider the cost and burden associated with filing an estate tax return and establishing and substantiating the values reported on such return for those estates that are not required to file a return under section 6018(a) but are filing such a return solely to elect portability of the decedent's DSUE amount.

The temporary regulations in § 20.2010–2T(a)(7)(i) provide that an estate tax return prepared in accordance with all applicable requirements is considered a ''complete and properly-prepared'' estate tax return. The temporary regulations in § 20.2010–2T(a)(7)(ii), however, provide that executors of estates that are not otherwise required to file an estate tax return under section 6018(a) do not have to report the value of certain property that qualifies for the marital or charitable deduction. If an executor chooses to make use of this special rule in filing an estate tax return, the executor must estimate the total value of the gross estate (including the values of the property that do not have to be reported on the estate tax return under this provision), based on a determination made in good faith and with due diligence regarding the value of all of the assets includible in the gross estate. The instructions issued with respect to the estate tax return (''Instructions for Form 706'') will provide ranges of dollar values, and the executor must identify on the estate tax return the particular range within which falls the executor's best estimate of the total gross estate. An amount corresponding to this range will be included on line 1, part 2, of the estate tax return, along with an indication of whether the line 1 total includes an estimate under this special rule. By signing the return, the executor is certifying, under penalties of perjury, that the estimate falls within the identified range of values to the best of the executor's knowledge and belief. The inquiry required to determine the executor's best estimate is the same an executor of any estate must make under current law to determine whether the estate has a filing obligation pursuant to section 6018(a); that is, to determine whether the fair market value of the gross estate exceeds the excess of the basic exclusion amount over the sum of the decedent's adjusted taxable gifts and the amount allowed to the decedent as a specific exemption under section 2521.

d. Opting Out of Portability Election

If the executor of the estate of a decedent with a surviving spouse does not wish to make the portability election, the temporary regulations in § 20.2010–2T(a)(3) require the executor to make an affirmative statement on the estate tax return signifying the decision to have the portability election not apply. If no estate tax return is required for that decedent's estate under section 6018(a), not filing a timely return will be considered to be an affirmative statement signifying the decision not to make a portability election.

e. Executor Responsible for Making Portability Election

A commenter responding to Notice 2011–82 suggested that the temporary regulations allow a surviving spouse to file an estate tax return on behalf of a decedent independently of a duly-appointed executor if the surviving spouse notifies the executor of the intention to file and the executor does not, in fact, file a return. Section 2010(c)(5), however, permits only the executor of the decedent's estate to file the estate tax return and make the portability election. Section 2203 defines the term ''executor'' for purposes of the estate tax to mean ''the executor or administrator of the decedent, or, if there is no executor or administrator appointed, qualified, and

acting within the United States, then any person in actual or constructive possession of any property of the decedent.''

The temporary regulations in § 20.2010–2T(a)(6)(i) provide that an executor or administrator that is appointed, qualified, and acting within the United States for the decedent's estate (an appointed executor), may file an estate tax return to elect portability or to opt to have the portability election not apply. The temporary regulations in § 20.2010–2T(a)(6)(ii) provide that, if there is no appointed executor, any person in actual or constructive possession of any property of the decedent may file the estate tax return to elect portability or to opt to have the portability election not apply. The temporary regulations in § 20.2010–2T(a)(6)(ii) refer to such a person as a ''non-appointed executor'' and provide that a portability election made by a non-appointed executor cannot be superseded by a contrary election made by another non-appointed executor of that same decedent's estate.

4. Computing the DSUE Amount

a. Computation Required on Estate Tax Return To Elect Portability

The temporary regulations in § 20.2010–2T(b)(1) require that an executor include a computation of the DSUE amount on the estate tax return of the decedent to allow portability of that decedent's DSUE amount. A complete and properly-prepared return contains the information required to compute a decedent's DSUE amount. Accordingly, in a transitional rule consistent with Notice 2011–82, the temporary regulations in § 20.2010–2T(b)(2) provide that the IRS will deem the required computation of the decedent's DSUE amount to have been made on an estate tax return that is considered complete and properly-prepared. The temporary regulations further clarify that, once the IRS revises the prescribed form for the estate tax return expressly to include the computation of the DSUE amount, executors that previously filed an estate tax return pursuant to the transitional rule will not be required to file a supplemental estate tax return using the revised form.

b. Method of Computing the DSUE Amount

Section 2010(c)(4) defines the DSUE amount as the lesser of (A) the basic exclusion amount, or (B) the excess of (i) the basic exclusion amount of the last deceased spouse of the surviving spouse, over (ii) the amount with respect to which the tentative tax is determined under section 2001(b)(1) on the estate of such deceased spouse.

The temporary regulations in § 20.2010–2T(c)(1)(i) confirm that the term ''basic exclusion amount'' referred to in section 2010(c)(4)(A) means the basic exclusion amount in effect in the year of the death of the decedent whose DSUE amount is being computed. Generally, only the basic exclusion amount of the decedent, as in effect in the year of the decedent's death, will be known at the time the DSUE amount must be computed and reported on the decedent's estate tax return. Because section 2010(c)(5)(A) requires the executor of an estate electing portability to compute and report the DSUE amount on a timely-filed estate tax return, and because the basic exclusion amount is integral to this computation, the term ''basic exclusion amount'' in section 2010(c)(4)(A) necessarily refers to such decedent's basic exclusion amount.

In responding to Notice 2011–82, several commenters also argued that the reference to ''basic exclusion amount'' in section 2010(c)(4)(B)(i) should be interpreted to mean ''applicable exclusion amount,'' citing to the computation of the DSUE amount in *Example 3* on page 53 of the Technical Explanation and to footnote 1582A that was added to the General Explanation by the ''ERRATA—'General Explanation of Tax Legislation Enacted in the 111th Congress''' (ERRATA). JCX–20–11, at page 1. *Example 3* computes the DSUE amount of a deceased spouse who was preceded in death by one spouse and was survived by another spouse. The deceased spouse's DSUE amount is computed using the applicable exclusion amount rather than the basic exclusion amount of the deceased spouse (as reduced by the amount of the deceased spouse's taxable estate). *Example 3* is reproduced verbatim in the General Explanation. See JCS–2–11 at page 555. The ERRATA acknowledges that section 2010(c)(4)(B)(i) uses the term basic exclusion amount, but notes that ''[a] technical correction may be necessary to replace the reference to the basic exclusion amount of the last deceased spouse of the surviving spouse with a reference to the applicable exclusion amount of such last deceased spouse, so that the statute reflects intent.'' JCX–20–11, at page 1, n. 1582A.

Treasury and the IRS have carefully considered this issue. Construing the language of section 2010(c)(4)(B)(i) as referring to the same number described in section 2010(c)(4)(A) would lead to an illogical result because it would effectively render the use of ''basic exclusion amount'' in section 2010(c)(4)(A) meaningless. Specifically, the basic exclusion amount (the amount referenced in section 2010(c)(4)(A)) cannot be less than that same number reduced by another number (the amount referenced in section 2010(c)(4)(B)). Under such an interpretation, the basic exclusion amount referenced in section 2010(c)(4)(A) could not limit or impact the DSUE amount, and thus it would serve no purpose as written. Based on the principle that a statute should not be construed in a manner that renders a provision of that statute superfluous and consistent with the indicia of legislative intent reflected in the Technical Explanation and the General Explanation, and in the exercise of the express authority granted by Congress in sections 2010(c)(6) and 7805, Treasury and the IRS have determined that the reference in section 2010(c)(4)(B)(i) to the basic exclusion amount is properly interpreted to mean the applicable exclusion amount. Thus, the temporary regulations adopt this interpretation.

c. Effect of Gift Taxes Paid and Payable on Computing the DSUE Amount

Several commenters on Notice 2011–82 suggested that, for purposes of computing the DSUE amount under section 2010(c)(4), the amount referred to in section 2010(c)(4)(B)(ii), which is the amount on which the decedent's tentative tax is determined under section 2001(b)(1), be construed to take into account gift tax paid by such decedent. The commenters noted that, to avoid using exclusion for amounts on which gift tax was paid, this construction should apply in computing the DSUE amount of such a decedent if (1) gift tax was paid by a decedent on transfers that caused the total of his or her taxable transfers to exceed the applicable exclusion amount at the time of the transfer, and (2) the total adjusted taxable gifts of the decedent is less than the applicable exclusion amount on the date of his or her death. The temporary regulations in § 20.2010–2T(c)(2) provide that amounts on which gift taxes were paid by a decedent are excluded from adjusted taxable gifts for the purpose of computing that decedent's DSUE amount.

d. Potential Impact of Credits in Sections 2013–2015 on the DSUE Amount

Commenters on Notice 2011–82 asked for clarification as to whether the DSUE amount is determined before or after the application of other available credits, such as the credit for tax on prior transfers (section 2013), the credit for foreign death taxes (section 2014), and the credit for death taxes on remainders

(section 2015). The issue of the impact of the credits in sections 2013 to 2015 on computing the DSUE amount merits further consideration. The temporary regulations reserve § 20.2010–2T(c)(3) to provide future guidance on this issue. Treasury and the IRS request comments regarding appropriate rules to coordinate these credits with portability of the exclusion. For the manner of submitting these comments, see the notice of proposed rulemaking on this subject appearing elsewhere in this issue of the **Federal Register**.

5. Use of the DSUE Amount by the Surviving Spouse

a. Date DSUE Amount May Be Taken Into Consideration by Surviving Spouse

Commenters on Notice 2011–82 asked for clarification on when the DSUE amount of a decedent is available to the surviving spouse or to the surviving spouse's estate for use in determining the surviving spouse's applicable exclusion amount. The temporary regulations in §§ 20.2010–3T(a) and 25.2505–2T(a) provide that, if the decedent is the last deceased spouse of the surviving spouse on the date of a transfer by the surviving spouse that is subject to gift or estate tax, the surviving spouse, or the estate of the surviving spouse, of that decedent may take into account that decedent's DSUE amount in determining the applicable exclusion amount of the surviving spouse when computing the surviving spouse's gift or estate tax liability on that transfer. This rule applies only if the decedent's executor elected portability. In addition, the temporary regulations in §§ 20.2010–3T(c)(1) and 25.2505–2T(d)(1) provide that a portability election made by the executor of a decedent's estate is effective as of the date of the decedent's death. Thus, the DSUE amount of a decedent survived by a spouse may be included in determining the applicable exclusion amount of the surviving spouse under section 2010(c)(2), subject to any applicable limitations, with respect to all transfers occurring after the death of the decedent, if the executor of the decedent's estate makes a portability election and the election is not superseded by the executor of the decedent's estate before the due date of the return, including extensions.

b. Last Deceased Spouse Limitation on DSUE Amount Available to Surviving Spouse

Some commenters responding to Notice 2011–82 suggested that the regulations clarify the scope of the last deceased spouse limitation in section 2010(c)(4)(B)(i). The temporary regulations in § 20.2010–1T(d)(5) explain that the term ''last deceased spouse'' referred to in section 2010(c)(4)(B)(i) means the most recently deceased individual who was married to the surviving spouse at that individual's death, except that an individual dying before calendar year 2011 cannot be considered the last deceased spouse of such surviving spouse. The temporary regulations in §§ 20.2010–3T(a)(3) and 25.2505–2T(a)(3) clarify that remarriage alone does not affect who will be considered the last deceased spouse and does not prevent the surviving spouse from including in the surviving spouse's applicable exclusion amount the DSUE amount of the deceased spouse who most recently preceded the surviving spouse in death. The temporary regulations further clarify that the identity of the last deceased spouse of the surviving spouse for purposes of portability is not affected by whether the estate of the last deceased spouse elects portability of the deceased spouse's DSUE amount or whether the last deceased spouse has any DSUE amount available. This is consistent with the statutory language, which refers to the ''last deceased spouse of such surviving spouse'' without further qualification, as well as with the Technical Explanation, which states that ''[t]he last deceased spouse limitation applies whether or not the last deceased spouse has any unused exclusion or the last deceased spouse's estate makes a timely election.'' JCX–55–10, at page 52, n. 57; see also General Explanation, JCS–2–11, at page 554, n. 1582.

For purposes of determining the applicable credit amount under section 2505(a)(1), a commenter asked Treasury and the IRS to clarify when one determines the identity of the last deceased spouse. Although section 2505(a)(1) refers to the applicable credit amount in effect under section 2010(c) as would apply if the donor died as of the end of the calendar year, this does not mean that the identity of the last deceased spouse is subject to change for purposes of computing the surviving spouse's applicable exclusion amount if the surviving spouse is preceded in death by a subsequent spouse after the gift transfer but before the end of the calendar year. Therefore, the temporary regulations provide in § 25.2505–2T(a) that for purposes of determining a surviving spouse's applicable exclusion amount when the surviving spouse makes a taxable gift, the surviving spouse's last deceased spouse is identified as of the date of the taxable gift. See § 20.2010–3T(a) for a comparable rule for estate tax purposes.

c. DSUE Amount Available in Case of Multiple Spouses and Previously-Applied DSUE Amount

Some commenters responding to Notice 2011–82 requested that the regulations clarify the outcome when a surviving spouse is preceded in death by more than one spouse. In particular, commenters asked how the DSUE amount to be included in the applicable exclusion amount of a surviving spouse is affected when a decedent who is currently considered the last deceased spouse of such surviving spouse either has no DSUE amount or has a smaller amount of DSUE in comparison to a decedent who previously was considered the last deceased spouse of such surviving spouse. The temporary regulations clarify that, in either situation, the surviving spouse may not apply any remaining DSUE amount from a prior deceased spouse.

In addition, the temporary regulations address how to compute the DSUE amount included in the applicable exclusion amount of a surviving spouse who made gifts between the deaths of two decedents, each of whom were at separate times the last deceased spouse of such surviving spouse. First, the temporary regulations in § 25.2505–2T(b) create an ordering rule by providing that, when a surviving spouse makes a taxable gift, the DSUE amount of the decedent who is the last deceased spouse of such surviving spouse will be considered to apply against the amount of the surviving spouse's taxable gifts for that calendar year before the surviving spouse's own basic exclusion amount will apply.

Second, the temporary regulations, in §§ 25.2505–2T(c) and 20.2010–3T(b), compute the DSUE amount available to such a surviving spouse or to his or her estate, respectively, as including both: (i) The DSUE amount of the surviving spouse's last deceased spouse, and (ii) any DSUE amount actually applied to taxable gifts pursuant to the rule in § 25.2505–2T(b) to the extent the DSUE amount so applied was from a decedent who no longer is the last deceased spouse for purposes of section 2010(c)(4)(B)(i). Under the rules in § 25.2505–2T, a surviving spouse may use the DSUE amount of a predeceased spouse as long as, for each transfer, such DSUE amount is from the surviving spouse's last deceased spouse at the time of that transfer. Thus, a spouse who has survived multiple spouses may use each last deceased spouse's DSUE amount before the death of that spouse's next spouse, and thereby may apply the

DSUE amount of multiple deceased spouses in succession. However, this does not permit the surviving spouse to use the sum of the DSUE amounts of those deceased spouses at one time, and a surviving spouse may not use the remaining DSUE amount of a prior deceased spouse following the death of a subsequent spouse.

6. Authority To Examine Returns of Deceased Spouses

Section 2010(c)(5)(B) confirms the IRS's authority to examine returns of each deceased spouse of the surviving spouse to determine the allowable DSUE amount even if the period of limitations on assessment under section 6501 has expired for the tax under chapters 11 or 12 with respect to such returns.

Section 7602(a) provides that the IRS may examine any books, papers, records, or other data which may be relevant or material to an inquiry for the purpose of ascertaining the accuracy of any return or determining the liability of any person for any internal revenue tax or liability. The returns of each deceased spouse whose executor elected portability are relevant or material to the determination of the allowable DSUE amount to be applied by the surviving spouse to a taxable transfer.

Accordingly, the temporary regulations confirm in §§ 20.2001–2T(a), 20.2010–2T(d), 20.2010–3T(d), and 25.2505–2T(e) that, in determining the allowable DSUE amount, the IRS may examine any one or more returns of each deceased spouse of the surviving spouse whose executor elected portability. Upon examination, the IRS may adjust or eliminate the DSUE amount reported on a return; however, the IRS may make an assessment of additional tax with respect to the deceased spouse's return only within the period of limitations under section 6501. The ability of the IRS to examine returns of a deceased spouse applies to each transfer by the surviving spouse to which a DSUE amount is or has been applied. The returns and return information of a deceased spouse may be disclosed to the surviving spouse or the surviving spouse's estate as appropriate under section 6103.

A commenter to Notice 2011–82 suggested that the regulations clarify whether the IRS's authority to examine returns even after the period of limitations on assessment has expired, as confirmed in section 2010(c)(5)(B), would suspend the substantive review and examination of the estate tax return of a decedent with a surviving spouse. Except to the extent provided in section 2010(c)(5)(B) with regard to the computation of the DSUE amount, the limitation in section 6501 continues to apply to the estate tax return so examination of the estate tax return will not be suspended solely because of the possibility of future reviews to determine the decedent's DSUE amount.

7. Applicability of Portability Rules to Nonresidents Who Are Not Citizens

Several commenters requested that the regulations clarify the applicability of the rules in section 2010(c) to estates of nonresidents who are not citizens. In response to these comments, the temporary regulations provide in § 20.2010–2T(a)(5) that an executor of the estate of a nonresident decedent who was not a citizen of the United States at the time of death may not make a portability election on behalf of that decedent. The temporary regulations in §§ 20.2010–3T(e) and 25.2505–2T(f) provide that a nonresident surviving spouse who was not a citizen of the United States at the time of such surviving spouse's death may not take into account the DSUE amount of any deceased spouse of such surviving spouse, except to the extent allowed under a treaty obligation of the United States.

8. Applicability of Portability in Case of Qualified Domestic Trusts

A commenter suggested that the regulations clarify how the portability rules apply when a qualified domestic trust (QDOT) (defined in section 2056A(a)) is created for the benefit of a surviving spouse who is a not a citizen of the United States. When property of a decedent passes to a QDOT, the decedent's estate is allowed a marital deduction under section 2056(d)(2) for the value of such property. Ultimately, however, estate tax is imposed on such property under section 2056A as distributions constituting taxable events are made from the QDOT. The estate tax imposed by section 2056A is the decedent's estate tax liability, and that tax generally equals the amount of additional estate tax that would have been imposed under section 2001 if the amount involved in the taxable event had been included in the decedent's taxable estate and had not been deductible under section 2056. See § 20.2056A–5(a). The estate tax that would have been imposed under section 2001 is computed by determining the net tax under section 2001 after the allowance of any credits, including the applicable credit amount determined under section 2010(c). Consequently, when a QDOT has been created for the benefit of a decedent's surviving spouse, the executor of the decedent's estate will compute a DSUE amount, on a preliminary basis, that may decrease as distributions constituting taxable events under section 2056A are made.

Commenters made several suggestions for applying portability to this situation. One proposal is to allow a decedent's DSUE amount to be computed and available to the surviving spouse as of the date of death of the decedent, without regard to the estate tax to be imposed by section 2056A. A second suggestion is to allow an executor of such an estate to elect portability with respect to only a portion of the DSUE amount so that an executor could reserve a portion of the decedent's DSUE amount for the estate tax to be imposed by section 2056A. A third proposal is to allow the decedent's applicable exclusion amount and the initially-determined DSUE amount to be applied on a chronological, or first come, first served, basis; that is, by applying the decedent's applicable exclusion amount on the occurrence of a taxable event subject to the estate tax imposed by section 2056A and at the time of a transfer by the surviving spouse subject to the gift tax imposed by section 2501, in each case, to the extent applicable exclusion amount or DSUE amount, respectively, is available at such times.

Each of the proposals raises issues of fairness, complexity, and administrability. The applicable exclusion amount first and foremost belongs to the decedent. Portability of a DSUE amount allows a surviving spouse to use a decedent's exclusion amount only to the extent it is not used by that decedent. Accordingly, the temporary regulations allow the decedent's estate full availability of the decedent's applicable exclusion amount until such time as the final estate tax liability of the decedent is computed. The temporary regulations in § 20.2010–2T(c)(4) provide that the executor of a decedent's estate claiming a marital deduction for property passing to a QDOT shall compute the decedent's DSUE amount on a preliminary basis on the decedent's estate tax return for the purpose of electing portability, although such amount subsequently will be reduced by the estate tax imposed by section 2056A. The temporary regulations further provide that the DSUE amount of such a decedent shall be redetermined upon the final distribution or other taxable event on which estate tax under section 2056A is imposed, which is generally upon the death of the surviving spouse or the earlier termination of all QDOTs created for that surviving spouse. The temporary regulations provide in

§ 20.2010–3T(c)(2) that the earliest date such a decedent's DSUE amount may be included in determining the applicable exclusion amount available to the surviving spouse or the surviving spouse's estate is the date of the event that triggers the final estate tax liability of the decedent under section 2056A. Generally, this means that such a decedent's DSUE amount will be available for transfers occurring by reason of the surviving spouse's death, but generally will not be available to the surviving spouse during life. However, the decedent's DSUE amount will be available to apply to the surviving spouse's taxable gifts made in the year of the surviving spouse's death, or, if the event terminating the QDOT occurs prior to the surviving spouse's death, then in the year of that terminating event and/or any subsequent year during the surviving spouse's life. Treasury and the IRS request further comments on this issue. For the manner of submitting these comments, see the notice of proposed rulemaking on this subject appearing elsewhere in this issue of the **Federal Register**.

Special Analyses

It has been determined that this Treasury decision is not considered a significant regulatory action as defined in Executive Order 12866, as supplemented by Executive Order 13563. Therefore, a regulatory assessment is not required. In addition, section 553(b) of the Administrative Procedure Act (5 U.S.C. chapter 5) does not apply to these regulations because they are excepted from the notice and comment requirements of section 553(b) and (c) of the Administrative Procedure Act under the interpretive rule and good cause exceptions provided by section 553(b)(3)(A) and (B) of that Act. These regulations are necessary to provide immediate guidance to estates of a decedent with a surviving spouse and to spouses surviving such a decedent on the application of the portability rules of section 2010(c), which applies to estates of decedents dying and gifts made after December 31, 2010. These regulations provide necessary guidance to address fundamental issues concerning the portability election, the computation of the DSUE amount, the identity of the last deceased spouse, and the application of the DSUE amount by the surviving spouse. In addition, the issues addressed by the regulations have been publicly noticed and subject to comment through the publication of Notice 2011–82. For these reasons, good cause exists for dispensing with notice and public comment pursuant to section 553(b) and (c) of the Administrative Procedure Act. For the applicability of the Regulatory Flexibility Act (5 U.S.C. chapter 6), please refer to the Special Analyses section of the preamble to the cross-referenced notice of proposed rulemaking published in the Proposed Rules section in this issue of the **Federal Register**. Pursuant to section 7805(f) of the Code, these regulations have been submitted to the Chief Counsel for Advocacy of the Small Business Administration for comment on their impact on small business.

Drafting Information

The principal author of these temporary regulations is Karlene Lesho, Office of the Associate Chief Counsel (Passthroughs and Special Industries). Other personnel from the IRS and the Treasury Department participated in their development.

List of Subjects

26 CFR Part 20

Estate taxes, Reporting and recordkeeping requirements.

26 CFR Part 25

Gift taxes, Reporting and recordkeeping requirements.

26 CFR Part 602

Reporting and recordkeeping requirements.

Amendments to the Regulations

Accordingly, 26 CFR parts 20, 25, and 602 are amended as follows:

PART 20—ESTATE TAX; ESTATE OF DECEDENTS DYING AFTER AUGUST 16, 1954

■ **Paragraph 1.** The authority citation for part 20 is amended by adding entries in numerical order to read as follows:

Authority: 26 U.S.C. 7805. * * *

Section 20.2010–0T also issued under 26 U.S.C. 2010(c)(6).

Section 20.2010–1T also issued under 26 U.S.C. 2010(c)(6).

Section 20.2010–2T also issued under 26 U.S.C. 2010(c)(6).

Section 20.2010–3T also issued under 26 U.S.C. 2010(c)(6). * * *

■ **Par. 2.** Section 20.2001–2T is added to read as follows:

§ 20.2001–2T Valuation of adjusted taxable gifts for purposes of determining the deceased spousal unused exclusion amount of last deceased spouse (temporary).

(a) *General rule.* Notwithstanding § 20.2001–1(b), see §§ 20.2010–2T(d) and 20.2010–3T(d) for additional rules regarding the authority of the Internal Revenue Service to examine any gift or other tax return(s), even if the time within which a tax may be assessed under section 6501 has expired, for the purpose of determining the deceased spousal unused exclusion (DSUE) amount available under section 2010(c) of the Internal Revenue Code (Code).

(b) *Effective/applicability date.* Paragraph (a) of this section applies to the estates of decedents dying in calendar year 2011 or a subsequent year in which the applicable exclusion amount is determined under section 2010(c) of the Code by adding the basic exclusion amount and, in the case of a surviving spouse, the DSUE amount.

(c) *Expiration date.* The applicability of this section expires on or before June 15, 2015.

■ **Par. 3.** Section 20.2010–0T is added to read as follows:

§ 20.2010–0T Table of contents (temporary).

This section lists the table of contents for §§ 20.2010–1T through 20.2010–3T.

§ 20.2010–1T Unified credit against estate tax; in general (temporary).

(a) General rule.
(b) Special rule in case of certain gifts made before 1977.
(c) Credit limitation.
(d) Explanation of terms.
(1) Applicable credit amount.
(2) Applicable exclusion amount.
(3) Basic exclusion amount.
(4) Deceased spousal unused exclusion (DSUE) amount.
(5) Last deceased spouse.
(e) Effective/applicability date.
(f) Expiration date.

§ 20.2010–2T Portability provisions applicable to estate of a decedent survived by a spouse (temporary).

(a) Election required for portability.
(1) Timely filing required.
(2) Portability election upon filing of estate tax return.
(3) Portability election not made; requirements for election not to apply.
(4) Election irrevocable.
(5) Estates eligible to make the election.
(6) Persons permitted to make the election.
(7) Requirements of return.
(b) Computation required for portability election.
(1) General rule.
(2) Transitional rule.
(c) Computation of the DSUE amount.
(1) General rule.
(2) Special rule to consider gift taxes paid by decedent.
(3) [Reserved]
(4) Special rule in case of property passing to qualified domestic trust.
(5) Examples.
(d) Authority to examine returns of decedent.
(e) Effective/applicability date.
(f) Expiration date.

§ 20.2010–3T Portability provisions applicable to the surviving spouse's estate (temporary).

(a) Surviving spouse's estate limited to DSUE amount of last deceased spouse.
(1) In general.
(2) No DSUE amount available from last deceased spouse.
(3) Identity of last deceased spouse unchanged by subsequent marriage or divorce.
(b) Special rule in case of multiple deceased spouses and a previously-applied DSUE amount.
(1) In general.
(2) Example.
(c) Date DSUE amount taken into consideration by surviving spouse's estate.
(1) General rule.
(2) Special rule when property passes to surviving spouse in a qualified domestic trust.
(d) Authority to examine returns of deceased spouses.
(e) Availability of DSUE amount for estates of nonresidents who are not citizens.
(f) Effective/applicability date.
(g) Expiration date.

■ **Par. 4.** Section 20.2010–1T is added to read as follows:

§ 20.2010–1T Unified credit against estate tax; in general (temporary).

(a) *General rule.* Section 2010(a) allows the estate of every decedent a credit against the estate tax imposed by section 2001. The allowable credit is the applicable credit amount. See paragraph (d)(1) of this section for an explanation of the term *applicable credit amount.*

(b) *Special rule in case of certain gifts made before 1977.* The applicable credit amount allowable under paragraph (a) of this section must be reduced by an amount equal to 20 percent of the aggregate amount allowed as a specific exemption under section 2521 (as in effect before its repeal by the Tax Reform Act of 1976) for gifts made by the decedent after September 8, 1976, and before January 1, 1977.

(c) *Credit limitation.* The applicable credit amount allowed under paragraph (a) of this section cannot exceed the amount of the estate tax imposed by section 2001.

(d) *Explanation of terms.* The explanation of terms in this section applies to this section and to §§ 20.2010–2T and 20.2010–3T.

(1) *Applicable credit amount.* The term *applicable credit amount* refers to the allowable credit against estate tax imposed by section 2001 and gift tax imposed by section 2501. The applicable credit amount equals the amount of the tentative tax that would be determined under section 2001(c) if the amount on which such tentative tax is to be computed were equal to the applicable exclusion amount. The applicable credit amount is determined by applying the unified rate schedule in section 2001(c) to the applicable exclusion amount.

(2) *Applicable exclusion amount.* The *applicable exclusion amount* equals the sum of the basic exclusion amount and, in the case of a surviving spouse, the deceased spousal unused exclusion (DSUE) amount.

(3) *Basic exclusion amount.* The *basic exclusion amount* is the sum of—

(i) For any decedent dying in calendar year 2011, $5,000,000; and

(ii) For any decedent dying after calendar year 2011, $5,000,000 multiplied by the cost-of-living adjustment determined under section 1(f)(3) for that calendar year by substituting ''calendar year 2010'' for ''calendar year 1992'' in section 1(f)(3)(B) and by rounding to the nearest multiple of $10,000.

(4) *Deceased spousal unused exclusion (DSUE) amount.* The term *DSUE amount* refers, generally, to the unused portion of a decedent's applicable exclusion amount to the extent this amount does not exceed the basic exclusion amount in effect in the year of the decedent's death. For rules on computing the DSUE amount, see §§ 20.2010–2T(c) and 20.2010–3T(b).

(5) *Last deceased spouse.* The term *last deceased spouse* means the most recently deceased individual who, at that individual's death after December 31, 2010, was married to the surviving spouse. See §§ 20.2010–3T(a) and 25.2505–2T(a) of this chapter for additional rules pertaining to the identity of the last deceased spouse for purposes of determining the applicable exclusion amount of the surviving spouse.

(e) *Effective/applicability date.* Paragraphs (d)(2), (d)(3), (d)(4), and (d)(5) of this section apply to the estates of decedents dying in calendar year 2011 or a subsequent year in which the applicable exclusion amount is determined under section 2010(c) of the Internal Revenue Code by adding the basic exclusion amount and, in the case of a surviving spouse, the DSUE amount. Paragraphs (a), (b), (c), and (d)(1) of this section apply to the estates of decedents dying on or after June 15, 2012.

(f) *Expiration date.* The applicability of this section expires on or before June 15, 2015.

■ **Par. 5.** Section 20.2010–2T is added to read as follows:

§ 20.2010–2T Portability provisions applicable to estate of a decedent survived by a spouse (temporary).

(a) *Election required for portability.* To allow a decedent's surviving spouse to take into account that decedent's deceased spousal unused exclusion (DSUE) amount, the executor of the decedent's estate must elect portability of the DSUE amount on a timely-filed Form 706, ''United States Estate (and Generation-Skipping Transfer) Tax Return'' (estate tax return). This election is referred to in this section and in § 20.2010–3T as the portability election.

(1) *Timely filing required.* An estate that elects portability will be considered, for purposes of Subtitle B and Subtitle F of the Internal Revenue Code (Code), to be required to file a return under section 6018(a). Accordingly, the due date of an estate tax return required to elect portability is 9 months after the decedent's date of death or the last day of the period covered by an extension (if an extension of time for filing has been obtained). See §§ 20.6075–1 and 20.6081–1 for additional rules relating to the time for filing estate tax returns.

(2) *Portability election upon filing of estate tax return.* Upon the timely filing of a complete and properly-prepared estate tax return, an executor of an estate of a decedent (survived by a spouse) will have elected portability of the decedent's DSUE amount unless the executor chooses not to elect portability and satisfies the requirement in paragraph (a)(3)(i) of this section. See paragraph (a)(7) of this section for the return requirements related to the portability election.

(3) *Portability election not made; requirements for election not to apply.* The executor of the estate of a decedent (survived by a spouse) will not make or be considered to make the portability election if either of the following applies:

(i) The executor states affirmatively on a timely-filed estate tax return, or in an attachment to that estate tax return, that the estate is not electing portability under section 2010(c)(5). The manner in which the executor may make this affirmative statement on the estate tax return will be as set forth in the instructions issued with respect to such form (''Instructions for Form 706'').

(ii) The executor does not timely file an estate tax return in accordance with paragraph (a)(1) of this section.

(4) *Election irrevocable.* An executor of the estate of a decedent (survived by a spouse) who timely files an estate tax return may make and may supersede a portability election previously made, provided that the estate tax return reporting the decision not to make a portability election is filed on or before the due date of the return, including extensions actually granted. However, see paragraph (a)(6) of this section when contrary elections are made by more

than one person permitted to make the election. The portability election, once made, becomes irrevocable once the due date of the estate tax return, including extensions actually granted, has passed.

(5) *Estates eligible to make the election.* An executor may elect portability on behalf of the estate of a decedent (survived by a spouse) if the decedent dies in calendar year 2011 or during a subsequent period in which portability of a DSUE amount is in effect. However, an executor of the estate of a nonresident decedent who was not a citizen of the United States at the time of death may not elect portability on behalf of that decedent, and the timely filing of such a decedent's estate tax return will not constitute the making of a portability election.

(6) *Persons permitted to make the election*—(i) *Appointed executor.* An executor or administrator of the estate of a decedent (survived by a spouse) that is appointed, qualified, and acting within the United States, within the meaning of section 2203 (an appointed executor), may file the estate tax return on behalf of the estate of the decedent and, in so doing, elect portability of the decedent's DSUE amount. An appointed executor also may elect not to have portability apply pursuant to paragraph (a)(3) of this section.

(ii) *Non-appointed executor.* If there is no appointed executor, any person in actual or constructive possession of any property of the decedent (a non-appointed executor) may file the estate tax return on behalf of the estate of the decedent and, in so doing, elect portability of the decedent's DSUE amount, or, by complying with paragraph (a)(3) of this section, may elect not to have portability apply. A portability election made by a non-appointed executor cannot be superseded by a contrary election made by another non-appointed executor of that same decedent's estate (unless such other non-appointed executor is the successor of the non-appointed executor who made the election). See § 20.6018–2 for additional rules relating to persons permitted to file the estate tax return.

(7) *Requirements of return*—(i) *General rule.* An estate tax return will be considered complete and properly-prepared for purposes of this section if it is prepared in accordance with the instructions issued for the estate tax return (Instructions for Form 706) and if the requirements of §§ 20.6018–2, 20.6018–3, and 20.6018–4 are satisfied. However, see paragraph (a)(7)(ii) of this section for reduced requirements applicable to certain property of certain estates.

(ii) *Reporting of value not required for certain property*—(A) *In general.* A special rule applies with respect to certain property of estates in which the executor is not required to file an estate tax return under section 6018(a), as determined without regard to paragraph (a)(1) of this section. With respect to such an estate, for bequests, devises, or transfers of property included in the gross estate, the value of which is deductible under section 2056 or 2056A (marital deduction property) or under section 2055(a) (charitable deduction property), an executor is not required to report a value for such property on the estate tax return (except to the extent provided in this paragraph (a)(7)(ii)(A)) and will be required to report only the description, ownership, and/or beneficiary of such property, along with all other information necessary to establish the right of the estate to the deduction in accordance with §§ 20.2056(a)–1(b)(i) through (iii) and 20.2055–1(c), as applicable. However, this rule does not apply to marital deduction property or charitable deduction property if—

(*1*) The value of such property relates to, affects, or is needed to determine, the value passing from the decedent to another recipient;

(*2*) The value of such property is needed to determine the estate's eligibility for the provisions of sections 2032, 2032A, 6166, or another provision of the Code;

(*3*) Less than the entire value of an interest in property includible in the decedent's gross estate is marital deduction property or charitable deduction property; or

(*4*) A partial disclaimer or partial qualified terminable interest property (QTIP) election is made with respect to a bequest, devise, or transfer of property includible in the gross estate, part of which is marital deduction property or charitable deduction property.

(B) *Statement required on the return.* Paragraph (a)(7)(ii)(A) of this section applies only if the executor exercises due diligence to estimate the fair market value of the gross estate, including the property described in paragraph (a)(7)(ii)(A) of this section. The Instructions for Form 706 will provide ranges of dollar values, and the executor must identify on the estate tax return an amount corresponding to the particular range within which falls the executor's best estimate of the total gross estate. Until such time as the prescribed form for the estate tax return expressly includes this estimate in the manner described in the preceding sentence, the executor must include the executor's best estimate, rounded to the nearest $250,000, on or attached to the estate tax return, signed under penalties of perjury.

(C) *Examples.* The following examples illustrate the application of paragraph (a)(7)(ii) of this section. In each example, assume that Husband (H) dies in 2011, survived by his wife (W), that both H and W are US citizens, that H's gross estate does not exceed the excess of the applicable exclusion amount for the year of his death over the total amount of H's adjusted taxable gifts and any specific exemption under section 2521, and that H's executor (E) timely files Form 706 solely to make the portability election.

Example 1. (i) Facts. The assets includible in H's gross estate consist of a parcel of real property and bank accounts held jointly with W with rights of survivorship, a life insurance policy payable to W, and a survivor annuity payable to W for her life. H made no taxable gifts during his lifetime.

(ii) *Application.* E files an estate tax return on which these assets are identified on the proper schedule, but E provides no information on the return with regard to the date of death value of these assets in accordance with paragraph (a)(7)(ii)(A) of this section. To establish the estate's entitlement to the marital deduction in accordance with § 20.2056(a)–1(b) (except with regard to establishing the value of the property) and the instructions for the estate tax return, E includes with the estate tax return evidence to verify the title of each jointly held asset, to confirm that W is the sole beneficiary of both the life insurance policy and the survivor annuity, and to verify that the annuity is exclusively for W's life. Finally, E certifies on the estate return E's best estimate, determined by exercising due diligence, of the fair market value of the gross estate in accordance with paragraph (a)(7)(ii)(B) of this section. The estate tax return is considered complete and properly prepared and E has elected portability.

Example 2. (i) *Facts.* H's will, duly admitted to probate and not subject to any proceeding to challenge its validity, provides that H's entire estate is to be distributed to a QTIP trust for W. The non-probate assets includible in H's gross estate consist of a life insurance policy payable to H's children from a prior marriage, and H's individual retirement account (IRA) payable to W. H made no taxable gifts during his lifetime.

(ii) *Application.* E files an estate tax return on which all of the assets includible in the gross estate are identified on the proper schedule. In the case of the probate assets and the IRA, no information is provided with regard to date of death value in accordance with paragraph (a)(7)(ii)(A) of this section. However, E makes a QTIP election and attaches a copy of H's will creating the QTIP, and describes each such asset and its ownership to establish the estate's entitlement to the marital deduction in accordance with the instructions for the estate tax return and § 20.2056(a)–1(b) (except with regard to establishing the value of the property). In the case of the life

insurance policy payable to H's children, all of the regular return requirements, including reporting and establishing the fair market value of such asset, apply. Finally, E certifies on the estate return E's best estimate, determined by exercising due diligence, of the fair market value of the gross estate in accordance with paragraph (a)(7)(ii)(B) of this section. The estate tax return is considered complete and properly prepared and E has elected portability.

(iii) *Variation.* The facts are the same except that there are no non-probate assets, and E elects to make only a partial QTIP election. In this case, the regular return requirements apply to all of the property includible in the gross estate and the provisions of paragraph (a)(7)(ii) of this section do not apply.

Example 3. (i) *Facts.* H's will, duly admitted to probate and not subject to any proceeding to challenge its validity, provides that 50 percent of the property passing under the terms of H's will is to be paid to a marital trust for W and 50 percent is to be paid to a trust for W and their descendants.

(ii) *Application.* The amount passing to the non-marital trust cannot be verified without knowledge of the full value of the property passing under the will. Therefore, the value of the property of the marital trust relates to or affects the value passing to the trust for W and the descendants of H and W. Accordingly, the general return requirements apply to all of the property includible in the gross estate and the provisions of paragraph (a)(7)(ii) of this section do not apply.

(b) *Computation required for portability election*—(1) *General rule.* In addition to the requirements described in paragraph (a) of this section, an executor of a decedent's estate must include a computation of the DSUE amount on the estate tax return to elect portability and thereby allow the decedent's surviving spouse to take into account that decedent's DSUE amount. See paragraph (b)(2) of this section for a transitional rule when the estate tax return form prescribed by the Internal Revenue Service (IRS) does not show expressly the computation of the DSUE amount. See paragraph (c) of this section for rules on computing the DSUE amount.

(2) *Transitional rule.* Until such time as the prescribed form for the estate tax return expressly includes a computation of the DSUE amount, a complete and properly-prepared estate tax return will be deemed to include the computation of the DSUE amount. See paragraph (a)(7) of this section for the requirements for a return to be considered complete and properly-prepared. Once the IRS revises the prescribed form for the estate tax return to include expressly the computation of the DSUE amount, executors that previously filed an estate tax return pursuant to this transitional rule will not be required to file a supplemental estate tax return using the revised form.

(c) *Computation of the DSUE amount*—(1) *General rule.* Subject to paragraphs (c)(2) through (c)(4) of this section, the DSUE amount of a decedent with a surviving spouse is the lesser of the following amounts—

(i) The basic exclusion amount in effect in the year of the death of the decedent; or

(ii) The excess of—

(A) The decedent's applicable exclusion amount; over

(B) The sum of the amount of the taxable estate and the amount of the adjusted taxable gifts of the decedent, which together is the amount on which the tentative tax on the decedent's estate is determined under section 2001(b)(1).

(2) *Special rule to consider gift taxes paid by decedent.* Solely for purposes of computing the decedent's DSUE amount, the amount of the adjusted taxable gifts of the decedent referred to in paragraph (c)(1)(ii)(B) of this section is reduced by the amount, if any, on which gift taxes were paid for the calendar year of the gift(s).

(3) [Reserved]

(4) *Special rule in case of property passing to qualified domestic trust.* When property passes for the benefit of a surviving spouse in a qualified domestic trust (QDOT) as defined in section 2056A(a), the DSUE amount of the decedent is computed on the decedent's estate tax return for the purpose of electing portability in the same manner as this amount is computed under paragraph (c)(1) of this section, but this DSUE amount is subject to subsequent adjustments. The DSUE amount of the decedent must be redetermined upon the occurrence of the final distribution or other event (generally the death of the surviving spouse or the earlier termination of all QDOTs for that surviving spouse) on which estate tax is imposed under section 2056A. See § 20.2056A–6 for rules on determining the estate tax under section 2056A. See § 20.2010–3T(c)(2) regarding the timing of the availability of the decedent's DSUE amount to the surviving spouse.

(5) *Examples.* The following examples illustrate the application of this paragraph (c):

Example 1. Computation of DSUE amount. (i) *Facts.* In 2002, having made no prior taxable gift, Husband (H) makes a taxable gift valued at $1,000,000 and reports the gift on a timely-filed gift tax return. Because the amount of the gift is equal to the applicable exclusion amount for that year ($1,000,000), $345,800 is allowed as a credit against the tax, reducing the gift tax liability to zero. H dies on September 29, 2011, survived by Wife (W). H and W are US citizens and neither has any prior marriage. H's taxable estate is $1,000,000. The executor of H's estate timely files H's estate tax return and elects portability, thereby allowing W to benefit from H's DSUE amount.

(ii) *Application.* The executor of H's estate computes H's DSUE amount to be $3,000,000 (the lesser of the $5,000,000 basic exclusion amount in 2011, or the excess of H's $5,000,000 applicable exclusion amount over the sum of the $1,000,000 taxable estate and the $1,000,000 amount of adjusted taxable gifts).

Example 2. Computation of DSUE amount when gift tax paid. (i) *Facts.* The facts are the same as in *Example 1* except that the value of H's taxable gift in 2002 is $2,000,000. After application of the applicable credit amount, H owes gift tax on $1,000,000, the amount of the gift in excess of the applicable exclusion amount for that year. H pays the gift tax owed on the transfer in 2002.

(ii) *Application.* On H's death, the executor of H's estate computes the DSUE amount to be $3,000,000 (the lesser of the $5,000,000 basic exclusion amount in 2011, or the excess of H's $5,000,000 applicable exclusion amount over the sum of the $1,000,000 taxable estate and $1,000,000 adjusted taxable gifts). H's adjusted taxable gifts of $2,000,000 were reduced for purposes of this computation by $1,000,000, the amount of taxable gifts on which gift taxes were paid.

Example 3. Computation of DSUE amount when QDOT created. (i) *Facts.* Husband (H), a US citizen, makes his first taxable gift in 2002, valued at $1,000,000, and reports the gift on a timely-filed gift tax return. No gift tax is due because the applicable exclusion amount for that year ($1,000,000) equals the fair market value of the gift. H dies in 2011 with a gross estate of $2,000,000. H's wife (W) is a US resident but not a citizen of the United States and, under H's will, a pecuniary bequest of $1,500,000 passes to a QDOT for the benefit of W. H's executor timely files an estate tax return and makes the QDOT election for the property passing to the QDOT, and H's estate is allowed a marital deduction of $1,500,000 under section 2056(d) for the value of that property. H's taxable estate is $500,000. On H's estate tax return, H's executor computes H's preliminary DSUE amount to be $3,500,000 (the lesser of the $5,000,000 basic exclusion amount in 2011, or the excess of H's $5,000,000 applicable exclusion amount over the sum of the $500,000 taxable estate and the $1,000,000 adjusted taxable gifts). No taxable events within the meaning of section 2056A occur during W's lifetime with respect to the QDOT, and W makes no taxable gifts. In 2012, W dies and the value of the assets of the QDOT is $1,800,000.

(ii) *Application.* H's DSUE amount is redetermined to be $1,700,000 (the lesser of the $5,000,000 basic exclusion amount in 2011, or the excess of H's $5,000,000 applicable exclusion amount over $3,300,000 (the sum of the $500,000 taxable estate augmented by the $1,800,000 of QDOT assets and the $1,000,000 adjusted taxable gifts)).

(d) *Authority to examine returns of decedent.* The IRS may examine returns of a decedent in determining the

decedent's DSUE amount, regardless of whether the period of limitations on assessment has expired for that return. See § 20.2010–3T(d) for additional rules relating to the IRS's authority to examine returns. See also section 7602 for the IRS's authority, when ascertaining the correctness of any return, to examine any returns that may be relevant or material to such inquiry.

(e) *Effective/applicability date.* This section applies to the estates of decedents dying in calendar year 2011 or a subsequent year in which the applicable exclusion amount is determined under section 2010(c) of the Code by adding the basic exclusion amount and, in the case of a surviving spouse, the DSUE amount.

(f) *Expiration date.* The applicability of this section expires on or before June 15, 2015.

■ **Par. 6.** Section 20.2010–3T is added to read as follows:

§ 20.2010–3T Portability provisions applicable to the surviving spouse's estate (temporary).

(a) *Surviving spouse's estate limited to DSUE amount of last deceased spouse*—(1) *In general.* A deceased spousal unused exclusion (DSUE) amount of a decedent, computed under § 20.2010–2T(c), is included in determining a surviving spouse's applicable exclusion amount under section 2010(c)(2), provided—

(i) Such decedent is the last deceased spouse of such surviving spouse within the meaning of § 20.2010–1T(d)(5) on the date of the death of the surviving spouse; and

(ii) The executor of the decedent's estate elected portability (see § 20.2010–2T(a) and (b) for applicable requirements).

(2) *No DSUE amount available from last deceased spouse.* If the last deceased spouse of such surviving spouse had no DSUE amount, or if the executor of such a decedent's estate did not make a portability election, the surviving spouse's estate has no DSUE amount (except as provided in paragraph (b)(1)(ii) of this section) to be included in determining the applicable exclusion amount, even if the surviving spouse previously had a DSUE amount available from another decedent who, prior to the death of the last deceased spouse, was the last deceased spouse of such surviving spouse. See paragraph (b) of this section for a special rule in the case of multiple deceased spouses and a previously-applied DSUE amount.

(3) *Identity of last deceased spouse unchanged by subsequent marriage or divorce.* A decedent is the last deceased spouse (as defined in § 20.2010–1T(d)(5)) of a surviving spouse even if, on the date of the death of the surviving spouse, the surviving spouse is married to another (then-living) individual. If a surviving spouse marries again and that marriage ends in divorce or an annulment, the subsequent death of the divorced spouse does not end the status of the prior deceased spouse as the last deceased spouse of the surviving spouse. The divorced spouse, not being married to the surviving spouse at death, is not the last deceased spouse as that term is defined in § 20.2010–1T(d)(5).

(b) *Special rule in case of multiple deceased spouses and previously-applied DSUE amount*—(1) *In general.* A special rule applies to compute the DSUE amount included in the applicable exclusion amount of a surviving spouse who previously has applied the DSUE amount of one or more deceased spouses to taxable gifts in accordance with § 25.2505–2T(b) and (c) of this chapter. If a surviving spouse has applied the DSUE amount of one or more last deceased spouses to the surviving spouse's transfers during life, and if any of those last deceased spouses is different from the surviving spouse's last deceased spouse as defined in § 20.2010–1T(d)(5) at the time of the surviving spouse's death, then the DSUE amount to be included in determining the applicable exclusion amount of the surviving spouse at the time of the surviving spouse's death is the sum of—

(i) The DSUE amount of the surviving spouse's last deceased spouse as described in paragraph (a)(1) of this section; and

(ii) The DSUE amount of each other deceased spouse of the surviving spouse, to the extent that such amount was applied to one or more taxable gifts of the surviving spouse.

(2) *Example.* The following example, in which all described individuals are US citizens, illustrates the application of this paragraph (b):

Example. (i) *Facts.* Husband 1 (H1) dies on January 15, 2011, survived by Wife (W). Neither has made any taxable gifts during H1's lifetime. H1's executor elects portability of H1's DSUE amount. The DSUE amount of H1 as computed on the estate tax return filed on behalf of H1's estate is $5,000,000. On December 31, 2011, W makes taxable gifts to her children valued at $2,000,000. W reports the gifts on a timely-filed gift tax return. W is considered to have applied $2,000,000 of H1's DSUE amount to the amount of taxable gifts, in accordance with § 25.2505–2T(c), and, therefore, W owes no gift tax. W has an applicable exclusion amount remaining in the amount of $8,000,000 ($3,000,000 of H1's remaining DSUE amount plus W's own $5,000,000 basic exclusion amount). After the death of H1, W marries Husband 2 (H2). H2 dies in June 2012. H2's executor elects portability of H2's DSUE amount, which is properly computed on H2's estate tax return to be $2,000,000. W dies in October 2012.

(ii) *Application.* The DSUE amount to be included in determining the applicable exclusion amount available to W's estate is $4,000,000, determined by adding the $2,000,000 DSUE amount of H2 and the $2,000,000 DSUE amount of H1 that was applied by W to W's 2011 taxable gifts. Thus, W's applicable exclusion amount is $9,000,000.

(c) *Date DSUE amount taken into consideration by surviving spouse's estate*—(1) *General rule.* A portability election made by an executor of a decedent's estate (see § 20.2010–2T(a) and (b) for applicable requirements) applies as of the date of the decedent's death. Thus, the decedent's DSUE amount is included in the applicable exclusion amount of the decedent's surviving spouse under section 2010(c)(2) and will be applicable to transfers made by the surviving spouse after the decedent's death. However, such decedent's DSUE amount will not be included in the applicable exclusion amount of the surviving spouse, even if the surviving spouse had made a transfer in reliance on the availability or computation of the decedent's DSUE amount:

(i) If the executor of the decedent's estate supersedes the portability election by filing a subsequent estate tax return in accordance with § 20.2010–2T(a)(4);

(ii) To the extent that the DSUE amount subsequently is reduced by a valuation adjustment or the correction of an error in calculation; or

(iii) To the extent that the surviving spouse cannot substantiate the DSUE amount claimed on the surviving spouse's return.

(2) *Special rule when property passes to surviving spouse in a qualified domestic trust.* When property passes from a decedent for the benefit of a surviving spouse in one or more qualified domestic trusts (QDOT) as defined in section 2056A(a) and the decedent's executor elects portability, the DSUE amount available to be included in the applicable exclusion amount of the surviving spouse under section 2010(c)(2) is the DSUE amount of the decedent as redetermined in accordance with § 20.2010–2T(c)(4). The earliest date on which the decedent's DSUE amount may be included in the applicable exclusion amount of the surviving spouse under section 2010(c)(2) is the date of the occurrence of the final QDOT distribution or final other event (generally, the death of the surviving spouse or the earlier

termination of all QDOTs for that surviving spouse) on which tax under section 2056A is imposed. However, the decedent's DSUE amount as redetermined in accordance with § 20.2010–2T(c)(4) may be applied to certain taxable gifts of the surviving spouse. See § 25.2505–2T(d)(2)(i) of this chapter.

(d) *Authority to examine returns of deceased spouses.* For the purpose of determining the DSUE amount to be included in the applicable exclusion amount of the surviving spouse, the Internal Revenue Service (IRS) may examine returns of each of the surviving spouse's deceased spouses whose DSUE amount is claimed to be included in the surviving spouse's applicable exclusion amount, regardless of whether the period of limitations on assessment has expired for any such return. The IRS's authority to examine returns of a deceased spouse applies with respect to each transfer by the surviving spouse to which a DSUE amount is or has been applied. Upon examination, the IRS may adjust or eliminate the DSUE amount reported on such a return; however, the IRS may assess additional tax on that return only if that tax is assessed within the period of limitations on assessment under section 6501 applicable to the tax shown on that return. See also section 7602 for the IRS's authority, when ascertaining the correctness of any return, to examine any returns that may be relevant or material to such inquiry. For purposes of these examinations to determine the DSUE amount, the surviving spouse is considered to have a material interest that is affected by the return information of the deceased spouse within the meaning of section 6103(e)(3).

(e) *Availability of DSUE amount for estates of nonresidents who are not citizens.* The estate of a nonresident surviving spouse who is not a citizen of the United States at the time of such surviving spouse's death shall not take into account the DSUE amount of any deceased spouse of such surviving spouse within the meaning of § 20.2010–1T(d)(5) except to the extent allowed under any applicable treaty obligation of the United States. See section 2102(b)(3).

(f) *Effective/applicability date.* This section applies to the estates of decedents dying in calendar year 2011 or a subsequent year in which the applicable exclusion amount is determined under section 2010(c) of the Code by adding the basic exclusion amount and, in the case of a surviving spouse, the DSUE amount.

(g) *Expiration date.* The applicability of this section expires on or before June 15, 2015.

PART 25—GIFT TAX; GIFTS MADE AFTER DECEMBER 31, 1954

■ **Par. 7.** The authority citation for part 25 is amended by adding an entry in numerical order to read as follows:

Authority: 26 U.S.C. 7805. * * *
Section 25.2505–2T also issued under 26 U.S.C. 2010(c)(6). * * *

■ **Par. 8.** Section 25.2505–0T is added to read as follows:

§ 25.2505–0T Table of contents (temporary).

This section lists the table of contents for §§ 25.2505–1T and 25.2505–2T.

§ 25.2505–1T Unified credit against gift tax; in general (temporary).

(a) General rule.
(b) Applicable rate of tax.
(c) Special rule in case of certain gifts made before 1977.
(d) Credit limitation.
(e) Effective/applicability date.
(f) Expiration date.

§ 25.2505–2T Gifts made by a surviving spouse having a DSUE amount available (temporary).

(a) Donor who is surviving spouse is limited to DSUE amount of last deceased spouse.
(1) In general.
(2) No DSUE amount available from last deceased spouse.
(3) Identity of last deceased spouse unchanged by subsequent marriage or divorce.
(b) Manner in which DSUE amount is applied.
(c) Special rule in case of multiple deceased spouses and previously-applied DSUE amount.
(1) In general.
(2) Example.
(d) Date DSUE amount taken into consideration by donor who is a surviving spouse.
(1) General rule.
(2) Special rule when property passes to surviving spouse in a qualified domestic trust.
(e) Authority to examine returns of deceased spouses.
(f) Availability of DSUE amount for nonresidents who are not citizens.
(g) Effective/applicability date.
(h) Expiration date.

■ **Par. 9.** Section 25.2505–1T is added to read as follows:

§ 25.2505–1T Unified credit against gift tax; in general (temporary).

(a) *General rule.* Section 2505(a) allows a citizen or resident of the United States a credit against the tax imposed by section 2501 for each calendar year. The allowable credit is the applicable credit amount in effect under section 2010(c) that would apply if the donor died as of the end of the calendar year, reduced by the sum of the amounts allowable as a credit against the gift tax due for all preceding calendar periods. See §§ 25.2505–2T, 20.2010–1T, and 20.2010–2T of this chapter for additional rules and definitions related to determining the applicable credit amount in effect under section 2010(c).

(b) *Applicable rate of tax.* In determining the amounts allowable as a credit against the gift tax due for all preceding calendar periods, the unified rate schedule under section 2001(c) in effect for such calendar year applies instead of the rates of tax actually in effect for preceding calendar periods. See sections 2505(a) and 2502(a)(2).

(c) *Special rule in case of certain gifts made before 1977.* The applicable credit amount allowable under paragraph (a) of this section must be reduced by an amount equal to 20 percent of the aggregate amount allowed as a specific exemption under section 2521 (as in effect before its repeal by the Tax Reform Act of 1976) for gifts made by the decedent after September 8, 1976, and before January 1, 1977.

(d) *Credit limitation.* The applicable credit amount allowed under paragraph (a) of this section for any calendar year shall not exceed the amount of the tax imposed by section 2501 for such calendar year.

(e) *Effective/applicability date.* Paragraph (a) of this section applies to gifts made on or after January 1, 2011. Paragraphs (b), (c), and (d) of this section apply to gifts made on or after June 15, 2012.

(f) *Expiration date.* The applicability of this section expires on or before June 15, 2015.

■ **Par. 10.** Section 25.2505–2T is added to read as follows:

§ 25.2505–2T Gifts made by a surviving spouse having a DSUE amount available (temporary).

(a) *Donor who is surviving spouse is limited to DSUE amount of last deceased spouse*—(1) *In general.* In computing a surviving spouse's gift tax liability with regard to a transfer subject to the tax imposed by section 2501 (taxable gift), a deceased spousal unused exclusion (DSUE) amount of a decedent, computed under § 20.2010–2T(c) of this chapter, is included in determining the surviving spouse's applicable exclusion amount under section 2010(c)(2), provided:

(i) Such decedent is the last deceased spouse of such surviving spouse within the meaning of § 20.2010–1T(d)(5) of

this chapter at the time of the surviving spouse's taxable gift; and

(ii) The executor of the decedent's estate elected portability (see § 20.2010–2T(a) and (b) of this chapter for applicable requirements).

(2) *No DSUE amount available from last deceased spouse.* If on the date of the surviving spouse's taxable gift the last deceased spouse of such surviving spouse had no DSUE amount or if the executor of the estate of such last deceased spouse did not elect portability, the surviving spouse has no DSUE amount (except as and to the extent provided in paragraph (c)(1)(ii) of this section) to be included in determining his or her applicable exclusion amount, even if the surviving spouse previously had a DSUE amount available from another decedent who, prior to the death of the last deceased spouse, was the last deceased spouse of such surviving spouse. See paragraph (c) of this section for a special rule in the case of multiple deceased spouses.

(3) *Identity of last deceased spouse unchanged by subsequent marriage or divorce.* A decedent is the last deceased spouse (as defined in § 20.2010–1T(d)(5) of this chapter) of a surviving spouse even if, on the date of the surviving spouse's taxable gift, the surviving spouse is married to another (then-living) individual. If a surviving spouse marries again and that marriage ends in divorce or an annulment, the subsequent death of the divorced spouse does not end the status of the prior deceased spouse as the last deceased spouse of the surviving spouse. The divorced spouse, not being married to the surviving spouse at death, is not the last deceased spouse as that term is defined in § 20.2010–1T(d)(5) of this chapter.

(b) *Manner in which DSUE amount is applied.* If a donor who is a surviving spouse makes a taxable gift and a DSUE amount is included in determining the surviving spouse's applicable exclusion amount under section 2010(c)(2), such surviving spouse will be considered to apply such DSUE amount to the taxable gift before the surviving spouse's own basic exclusion amount.

(c) *Special rule in case of multiple deceased spouses and previously-applied DSUE amount*—(1) *In general.* A special rule applies to compute the DSUE amount included in the applicable exclusion amount of a surviving spouse who previously has applied the DSUE amount of one or more deceased spouses. If a surviving spouse applied the DSUE amount of one or more last deceased spouses to the surviving spouse's previous lifetime transfers, and if any of those last deceased spouses is different from the surviving spouse's last deceased spouse as defined in § 20.2010–1T(d)(5) of this chapter at the time of the current taxable gift by the surviving spouse, then the DSUE amount to be included in determining the applicable exclusion amount of the surviving spouse that will be applicable at the time of the current taxable gift is the sum of—

(i) The DSUE amount of the surviving spouse's last deceased spouse as described in paragraph (a)(1) of this section; and

(ii) The DSUE amount of each other deceased spouse of the surviving spouse to the extent that such amount was applied to one or more previous taxable gifts of the surviving spouse.

(2) *Example.* The following example, in which all described individuals are US citizens, illustrates the application of this paragraph (c):

Example. (i) *Facts.*

Husband 1 (H1) dies on January 15, 2011, survived by Wife (W). Neither has made any taxable gifts during H1's lifetime. H1's executor elects portability of H1's deceased spousal unused exclusion (DSUE) amount. The DSUE amount of H1 as computed on the estate tax return filed on behalf of H1's estate is $5,000,000. On December 31, 2011, W makes taxable gifts to her children valued at $2,000,000. W reports the gifts on a timely-filed gift tax return. W is considered to have applied $2,000,000 of H1's DSUE amount to the 2011 taxable gifts, in accordance with paragraph (b) of this section, and, therefore, W owes no gift tax. W is considered to have an applicable exclusion amount remaining in the amount of $8,000,000 ($3,000,000 of H1's remaining DSUE amount plus W's own $5,000,000 basic exclusion amount). After the death of H1, W marries Husband 2 (H2). H2 dies on June 30, 2012. H2's executor elects portability of H2's DSUE amount, which is properly computed on H2's estate tax return to be $2,000,000.

(ii) *Application.* The DSUE amount to be included in determining the applicable exclusion amount available to W for gifts during the second half of 2012 is $4,000,000, determined by adding the $2,000,000 DSUE amount of H2 and the $2,000,000 DSUE amount of H1 that was applied by W to W's 2011 taxable gifts. Thus, W's applicable exclusion amount during the balance of 2012 is $9,000,000.

(d) *Date DSUE amount taken into consideration by donor who is a surviving spouse*—(1) *General rule.* A portability election made by an executor of a decedent's estate (see § 20.2010–2T(a) and (b) of this chapter for applicable requirements) applies as of the date of the decedent's death. Thus, the decedent's DSUE amount is included in the applicable exclusion amount of the decedent's surviving spouse under section 2010(c)(2) and will be applicable to transfers made by the surviving spouse after the decedent's death. However, such decedent's DSUE amount will not be included in the applicable exclusion amount of the surviving spouse, even if the surviving spouse had made a taxable gift in reliance on the availability or computation of the decedent's DSUE amount:

(i) If the executor of the decedent's estate supersedes the portability election by filing a subsequent estate tax return in accordance with § 20.2010–2T(a)(4) of this chapter;

(ii) To the extent that the DSUE amount subsequently is reduced by a valuation adjustment or the correction of an error in calculation; or

(iii) To the extent that the DSUE amount claimed on the decedent's return cannot be determined.

(2) *Special rule when property passes to surviving spouse in a qualified domestic trust*—(i) *In general.* When property passes from a decedent for the benefit of a surviving spouse in one or more qualified domestic trusts (QDOT) as defined in section 2056A(a) and the decedent's executor elects portability, the DSUE amount available to be included in the applicable exclusion amount of the surviving spouse under section 2010(c)(2) is the DSUE amount of the decedent as redetermined in accordance with § 20.2010–2T(c)(4) of this chapter. The earliest date on which the decedent's DSUE amount may be included in the applicable exclusion amount of the surviving spouse under section 2010(c)(2) is the date of the occurrence of the final QDOT distribution or final other event (generally, the death of the surviving spouse or the earlier termination of all QDOTs for that surviving spouse) on which tax under section 2056A is imposed. However, the decedent's DSUE amount as redetermined in accordance with § 20.2010–2T(c)(4) of this chapter may be applied to the surviving spouse's taxable gifts made in the year of the surviving spouse's death, or if the terminating event occurs prior to the surviving spouse's death, then in the year of that terminating event and/or any subsequent year during the surviving spouse's life.

(ii) *Example.* The following example illustrates the application of this paragraph (d)(2):

Example. (i) *Facts.* Husband (H), a US citizen, dies in January 2011 having made no taxable gifts during his lifetime. H's gross estate is $3,000,000. H's wife (W) is a US resident but not a citizen of the United States and, under H's will, a pecuniary bequest of $2,000,000 passes to a QDOT for the benefit of W. H's executor timely files an estate tax return and makes the QDOT election for the

property passing to the QDOT, and H's estate is allowed a marital deduction of $2,000,000 under section 2056(d) for the value of that property. H's taxable estate is $1,000,000. On H's estate tax return, H's executor computes H's preliminary DSUE amount to be $4,000,000. No taxable events within the meaning of section 2056A occur during W's lifetime with respect to the QDOT. W makes a taxable gift of $1,000,000 to X in December 2011 and a taxable gift of $1,000,000 to Y in January 2012. W dies in September 2012, not having married again, when the value of the assets of the QDOT is $2,200,000.

(ii) *Application.* H's DSUE amount is redetermined to be $1,800,000 (the lesser of the $5,000,000 basic exclusion amount in 2011, or the excess of H's $5,000,000 applicable exclusion amount over $3,200,000 (the sum of the $1,000,000 taxable estate augmented by the $2,200,000 of QDOT assets)). On W's gift tax return filed for 2011, W cannot apply any DSUE amount to the gift made to X. However, because W's gift to Y was made in the year that W died, W's executor will apply $1,000,000 of H's redetermined DSUE amount to the gift on W's gift tax return filed for 2012. The remaining $800,000 of H's redetermined DSUE amount is included in W's applicable exclusion amount to be used in computing W's estate tax liability.

(e) *Authority to examine returns of deceased spouses.* For the purpose of determining the DSUE amount to be included in the applicable exclusion amount of the surviving spouse, the Internal Revenue Service (IRS) may examine returns of each of the surviving spouse's deceased spouses whose DSUE amount is claimed to be included in the surviving spouse's applicable exclusion amount, regardless of whether the period of limitations on assessment has expired for any such return. The IRS's authority to examine returns of a deceased spouse applies with respect to each transfer by the surviving spouse to which a DSUE amount is or has been applied. Upon examination, the IRS may adjust or eliminate the DSUE amount reported on such a return; however, the IRS may assess additional tax on that return only if that tax is assessed within the period of limitations on assessment under section 6501 applicable to the tax shown on that return. See also section 7602 for the IRS's authority, when ascertaining the correctness of any return, to examine any returns that may be relevant or material to such inquiry.

(f) *Availability of DSUE amount for nonresidents who are not citizens.* A nonresident surviving spouse who was not a citizen of the United States at the time of making a transfer subject to tax under chapter 12 of the Internal Revenue Code shall not take into account the DSUE amount of any deceased spouse except to the extent allowed under any applicable treaty obligation of the United States. See section 2102(b)(3).

(g) *Effective/applicability date.* This section applies to gifts made in calendar year 2011 or in a subsequent year in which the applicable exclusion amount is determined under section 2010(c) of the Code by adding the basic exclusion amount and, in the case of a surviving spouse, the DSUE amount.

(h) *Expiration date.* The applicability of this section expires on or before June 15, 2015.

PART 602—OMB CONTROL NUMBERS UNDER THE PAPERWORK REDUCTION ACT

■ **Par. 11.** The authority citation for part 602 continues to read as follows:

Authority: 26 U.S.C. 7805.

■ **Par. 12.** In § 602.101, paragraph (b) is amended by adding the following entry in numerical order to the table to read as follows:

§ 602.101 OMB Control numbers.

* * * * *

(b) * * *

CFR Part or section where identified and described	Current OMB Control No.
* * * * *	
20.2010–2T	1545–0015
* * * * *	

Steven T. Miller,

Deputy Commissioner for Services and Enforcement.

Approved: June 12, 2012.

Emily S. McMahon,

Acting Assistant Secretary of Treasury (Tax Policy).

[FR Doc. 2012–14781 Filed 6–15–12; 8:45 am]

BILLING CODE 4830–01–P

ENVIRONMENTAL PROTECTION AGENCY

40 CFR Part 52

[EPA–R02–OAR–2011–0956; FRL–9682–7]

Determinations of Failure To Attain the One-Hour Ozone Standard by 2007, Current Attainment of the One-Hour Ozone Standard, and Attainment of the 1997 Eight-Hour Ozone Standards for the New York-Northern New Jersey-Long Island Nonattainment Area in Connecticut, New Jersey and New York

AGENCY: Environmental Protection Agency (EPA).

ACTION: Final rule.

SUMMARY: EPA is finalizing four separate and independent determinations related to the New York-Northern New Jersey-Long Island (NY-NJ-CT) one-hour and 1997 eight-hour ozone nonattainment areas. The boundaries of the one-hour and eight-hour ozone nonattainment areas differ slightly. With respect to the NY-NJ-CT one-hour nonattainment area, EPA is determining that the area previously failed to attain the one-hour ozone National Ambient Air Quality Standard (NAAQS) by its applicable attainment deadline of November 15, 2007 (based on complete, quality-assured and certified ozone monitoring data for 2005–2007), and EPA is also determining that the area is currently attaining the now revoked one-hour ozone standard based on complete, quality-assured and certified ozone monitoring data for 2008–2010.

Quality-assured ozone monitoring data in the Air Quality System for 2011 indicate the area continues to attain the revoked one-hour ozone standard. With respect to the NY-NJ-CT 1997 eight-hour ozone nonattainment area, EPA is determining that the area attained the 1997 eight-hour ozone standard by the applicable deadline, June 15, 2010, based on complete, quality-assured and certified ozone monitoring data for 2007–2009. EPA is also determining that the area is currently attaining the 1997 eight-hour ozone standard based on complete, quality-assured and certified ozone monitoring data for 2008–2010. Quality-assured ozone monitoring data for 2011 indicate that the area continues to attain the 1997 eight-hour ozone standard.

EPA's ozone implementation regulation for the 1997 eight-hour ozone standard provides that the requirements for the States to submit certain reasonable further progress plans, attainment demonstrations, contingency measures and any other planning requirements of the Clean Air Act related to attainment of that ozone standard shall be suspended for as long as the area continues to attain the standard. A determination of attainment does not constitute a redesignation to attainment. Redesignation requires the states to meet a number of additional criteria, including EPA approval of a state plan to maintain the air quality standard for ten years after redesignation.

DATES: *Effective Date:* This rule is effective on July 18, 2012.

ADDRESSES: EPA has established a docket for this action under Docket ID No. EPA–R02–OAR–2011–0956. All

documents in the docket are listed on the *www.regulations.gov* Web site. Although listed in the index, some information is not publicly available, e.g., CBI or other information whose disclosure is restricted by statute. Certain other material, such as copyrighted material, is not placed on the Internet and will be publicly available only in hard copy form. Publicly available docket materials are available either electronically through *www.regulations.gov* or in hard copy at the Environmental Protection Agency, Region 2 Office, Air Programs Branch, 290 Broadway, 25th Floor, New York, New York 10007–1866. This Docket Facility is open from 8:30 a.m. to 4:30 p.m., Monday through Friday, excluding legal holidays. The Docket telephone number is 212–637–4249.

FOR FURTHER INFORMATION CONTACT: If you have questions concerning EPA's action related to New Jersey or New York, please contact Paul Truchan, Air Programs Branch, Environmental Protection Agency, 290 Broadway, 25th floor, New York, New York 10008–1866, telephone number (212) 637–4249. If you have questions concerning EPA's action related to Connecticut, please contact Richard Burkhart, Air Quality Planning Unit, Environmental Protection Agency, EPA New England Regional Office, 5 Post Office Square—Suite 100, Mail Code OEP05–02, Boston, MA 02109–3912, telephone number (617) 918–1664, fax number (617) 918–0664, email *burkhart.richard@epa.gov.*

SUPPLEMENTARY INFORMATION:

Table of Contents

I. What are the actions EPA is taking?
II. What is the background for these actions?
III. What comments were received on these actions and what are EPA's responses?
IV. Final Actions
V. Statutory and Executive Order Reviews

I. What are the actions EPA is taking?

EPA is finalizing four separate and independent determinations for the New York-Northern New Jersey-Long Island (NY-NJ-CT) ozone nonattainment area (hereafter, ''the NY-NJ-CT area'').

A. Determination of Failure To Attain the One-Hour Ozone Standard by Applicable Attainment Date

EPA is determining that the NY-NJ-CT one-hour ozone nonattainment area previously failed to attain the one-hour ozone National Ambient Air Quality Standard (NAAQS) by its applicable attainment deadline of November 15, 2007 (based on complete, quality-assured and certified ozone monitoring data for 2005–2007).

B. Determination of Current Attainment of the One-Hour Ozone Standard

EPA is determining that the NY-NJ-CT one-hour ozone nonattainment area is currently attaining the one-hour ozone standard based on complete, quality-assured and certified ozone monitoring data for 2008–2010. Quality-assured ozone monitoring data for 2011 in the Air Quality System (AQS) indicate the area continues to attain the one-hour ozone standard.

C. Determination of Attainment of the 1997 Eight-Hour Ozone Standard by Applicable Attainment Date

EPA is determining that the NY-NJ-CT eight-hour ozone nonattainment area attained the 1997 eight-hour standard by the applicable deadline, June 15, 2010, based on complete, quality-assured and certified ozone monitoring data for 2007–2009.

D. Determination of Continued Attainment of the 1997 Eight-Hour Ozone Standard

EPA is determining that the area is currently attaining the 1997 eight-hour ozone standard based on complete, quality-assured and certified ozone monitoring data for 2008–2010. Quality-assured data available in the AQS for 2011 indicate that the area continues to attain the 1997 eight-hour ozone standard. Based on the determination that the area is currently attaining the 1997 eight-hour standard, 40 CFR 51.918 [1] of EPA's ozone implementation rule for the 1997 eight-hour ozone standard provides that the requirements for the States to submit certain reasonable further progress plans, attainment demonstrations, contingency measures and any other planning requirements of the Clean Air Act related to attainment of that standard shall be suspended for as long as the area continues to attain the standard. Quality-assured ozone monitoring data for 2011 in AQS indicate the area continues to attain the 1997 eight-hour ozone standard.[2]

In addition, EPA is withdrawing EPA's proposed disapprovals of Connecticut's and New Jersey's 1997 eight-hour ozone attainment demonstrations, which were previously published in the **Federal Register** on May 8, 2009 (74 FR 21568 and 74 FR 21578).

In order to determine the areas' air quality status for purposes of this action, EPA reviewed ozone monitoring air quality data from the States, in accordance with 40 CFR 50.9, 40 CFR part 50 appendix H and appendix I, and EPA policy and guidance, as well as data processing, data rounding and data completeness requirements. EPA's review of the air quality data and related rationale for these determinations are explained in the Notice of Proposed Rulemaking (NPR) published in the **Federal Register** on January 25, 2012 (77 FR 3720) and will not be restated here.

II. What is the background for these actions?

The boundaries for the NY-NJ-CT one-hour and the eight-hour ozone nonattainment areas are slightly different. For the one-hour ozone NAAQS of 0.12 parts per million (ppm), the area is composed of: Bergen, Essex, Hudson, Hunterdon, Middlesex, Monmouth, Morris, Ocean, Passaic, Somerset, Sussex, and Union Counties in New Jersey; Bronx, Kings, Nassau, New York, Queens, Richmond, Rockland, Suffolk, Westchester Counties and part of Orange County in New York; and parts of Fairfield and Litchfield Counties in Connecticut. The 1997 eight-hour ozone nonattainment area is composed of many of the same counties as the one-hour ozone nonattainment area but does not include Ocean County in New Jersey, any part of Orange County in New York or any part of Litchfield County in Connecticut, and does include Warren County in New Jersey, and all of Fairfield, New Haven and Middlesex Counties in Connecticut. The one-hour ozone standard designations were established by EPA following the enactment of the Clean Air Act (CAA) Amendments in 1990. See 56 FR 56694 (November 6, 1991). Each area of the country that was

[1] CFR refers to the Code of Federal Regulations, in this case Title 40 part 51.

[2] Greenwich Point Park, Connecticut (AQS 090010017) an ozone monitor in the New York-Northern New Jersey-Long Island one-hour and 1997 eight-hour ozone nonattainment areas was taken out of service on August 28, 2011 in an attempt to protect the site from the prediction of the landfall of Hurricane Irene, at or near New York City, New York. In the end, the Hurricane storm surge and/or storm driven waves did submerge an electric meter box, servicing the ozone monitor. The meter box was replaced and power was restored by January 4, 2012. The result of this power outage was the loss of ozone data from August 28 to September 30, 2011. As a result of this loss of data, the Greenwich Point Park ozone monitor fell just short of 75 percent data completeness required. Nevertheless, all available 2011 ozone data indicate New York-Northern New Jersey-Long Island one-hour and 1997 eight-hour ozone nonattainment areas continue in attainment for both the 1-hour and 8-hour ozone standards in 2011. Monitoring data for all other monitors in the area for the states of New York and Connecticut are certified as complete and indicated attainment of both standards. The ozone data for New Jersey is in AQS, is quality assured, and is complete, but as of May 4, 2012 the NJ ozone data have not yet been certified.

designated nonattainment for the one-hour ozone NAAQS was classified by operation of law as marginal, moderate, serious, severe, or extreme depending on the severity of the area's air quality problem. See CAA sections 107(d)(1)(C) and 181(a). The NY-NJ-CT one-hour ozone nonattainment area was designated nonattainment and classified as severe-17, with an attainment deadline of November 15, 2007.

On July 18, 1997, (62 FR 38856), EPA promulgated a new, more protective standard for ozone based on eight-hour average concentrations (the ''1997 eight-hour ozone NAAQS''). EPA designated and classified most areas of the country under the eight-hour ozone NAAQS in an April 30, 2004 final rule (69 FR 23858). The NY-NJ-CT 1997 eight-hour ozone nonattainment area was designated nonattainment and classified as moderate with an attainment deadline of June 15, 2010.

On April 30, 2004, EPA also issued a final rule (69 FR 23951) entitled ''Final Rule To Implement The 8-hour Ozone National Ambient Air Quality Standard—Phase 1,'' referred to as the Phase 1 Rule. Among other matters, this rule revoked the one-hour ozone NAAQS in most areas of the country, effective June 15, 2005. See, 40 CFR 50.9(b); 69 FR 23996; and 70 FR 44470 (August 3, 2005). The Phase 1 Rule also set forth how anti-backsliding principles will ensure continued progress toward attainment of the eight-hour ozone NAAQS by identifying which one-hour ozone requirements remain applicable in an area after revocation of the one-hour ozone NAAQS.

Although EPA revoked the one-hour ozone standard (effective June 15, 2005), eight-hour ozone nonattainment areas remain subject to certain one-hour anti-backsliding requirements based on their one-hour ozone classification. Initially, EPA's rules to address the transition from the one-hour to the eight-hour ozone standard did not include one-hour nonattainment area contingency measures or major source penalty fee programs among the measures retained as one-hour ozone anti-backsliding requirements.[3] However, on December 23, 2006, the United States Court of Appeals for the District of Columbia Circuit determined that EPA should not have excluded these requirements (and certain others not relevant here) from its anti-backsliding requirements. *South Coast Air Quality Management District* v. *EPA,* 472 F.3d 882 (D.C. Cir. 2006) reh'g denied 489 F.3d 1245 (clarifying that the vacatur was limited to the issues on which the court granted the petitions for review). Thus, the Court vacated the provisions that excluded these requirements. As a result, states must continue to meet the obligations for one-hour ozone NAAQS contingency measures. EPA has issued a rule that, among other things, removed the vacated provisions of 40 CFR 51.905(e), and addressed the anti-backsliding requirement for contingency measures for failure to attain or make reasonable further progress toward attainment of the one-hour standard. See 74 FR 2936 (January 16, 2009) (proposed rule); 74 FR 7027 (February 12, 2009) (notice of public hearing and extension of comment period), and 77 FR 28424 (May 14, 2012) (final rule).

[3] Final Rule to Implement The 8-Hour Ozone National Ambient Air Quality Standard—Phase 1, 69 FR 23951 (April 30, 2004).

III. What comments were received on these actions and what are EPA's responses?

EPA received six distinct comments from three parties: the New Jersey Department of Environmental Protection (NJDEP), Public Service Enterprise Group, Inc. (PSEG) and Sierra Club. No adverse comments were directed at EPA's monitoring data-based air quality determinations, in and of themselves. One commenter (Sierra Club) submitted adverse comments concerning EPA's discussion of certain regulatory effects and consequences of these determinations. Below, EPA summarizes those comments and sets forth EPA's responses.

1. Two commenters (NJDEP and PSEG) urged EPA to determine that the section 185 fee requirement under the one-hour standard for the NY-NJ-CT nonattainment area is no longer applicable to the nonattainment area because the area attained the one-hour standard. One commenter (PSEG) alternatively suggested EPA issue a Termination Determination for the section 185 fee requirement based upon the complete, quality-assured monitoring data showing attainment with the one-hour ozone NAAQS in the area due to permanent and enforceable emission reductions implemented in the area. The commenter contended that such a Termination Determination would not be dependent upon the Agency's previous section 185 fee guidance, which was vacated by the D.C. Circuit Court, but would instead be consistent with the statutory objectives of section 185 and the reasoning of the Court in *South Coast Air Quality Management District* v. *EPA,* 472 F.3d 882 (D.C. Cir. 2006) (*South Coast*). Sierra Club, in its comments, requested that EPA apply section 185 requirements for the period from 2007–2010.

Response: On January 29, 2011, April 29, 2011 and June 16, 2011, the Departments of Environmental Protection for the States of New Jersey, Connecticut and New York, respectively, requested that EPA make a determination that the NY-NJ-CT area has attained the 1-hour ozone standard due to permanent and enforceable emissions reductions, and that therefore the States should be relieved of any obligation to implement the penalty fees for that area under section 185. EPA is considering these requests and will take separate notice and comment rulemaking shortly to address them. EPA has not yet proposed any action on these requests and thus cannot take any final action with respect to them in this rulemaking.

EPA in this rulemaking is finalizing its determination that the area has attained the 1-hour ozone standard based on certified air quality data for 2008–2010, and continuing through 2011. No commenter has requested that EPA require the States to implement the section 185 penalty fee program in this area in the period subsequent to the area's attainment of the 1-hour standard in 2010. Below, EPA addresses one commenter's (Sierra Club) contentions with respect to requiring penalty fees for the period prior to 2010. EPA will be addressing any remaining issues with respect to terminating one-hour ozone section 185 penalty fee requirements in this area in future rulemaking actions.

2. A commenter (Sierra Club) contends that EPA has no authority to withdraw its proposed disapprovals of the 1997 eight-hour ozone attainment demonstration for the NY-NJ-CT eight-hour nonattainment area. The commenter cites 42 U.S.C. 7410(k)(2) and (3) as requiring EPA to act within 12 months of a finding of completeness. Also, commenter asserts that a determination of attainment (Clean Data Determination) does not and cannot suspend EPA's obligation to approve or disapprove a SIP submission after it has been submitted to EPA.

Response: Assuming that, in a situation where EPA has already conducted notice and comment rulemaking to determine that an area is in attainment of the standard, the Agency is nevertheless obliged to conduct additional rulemaking on a plan to accomplish what has been done, under section 110(k)(2), EPA is not obligated to finalize a prior version of a proposed rulemaking on the plan after circumstances have changed. In this case, EPA's determination, after notice and comment rulemaking, that the area

attained the 1997 eight-hour ozone NAAQS by its attainment date, eliminates the basis for the prior proposed disapproval. Under these circumstances, it is reasonable, proper and correct for EPA to withdraw the proposed disapproval. EPA may then proceed to take into account the determination that the area has attained, in a subsequent proposed action to approve the submitted attainment demonstration SIPs. Alternatively, in view of EPA's final determination of attainment for the area, the States of Connecticut and New Jersey may choose to withdraw their attainment demonstrations. Thus, the commenter's concerns are misplaced. Withdrawal of the proposed disapprovals is consistent with, and in no way prohibits further action with respect to the attainment demonstrations in accordance with the EPA's determination that the monitoring data show the area has attained the 1997 eight-hour standard since 2009.

3. A commenter (Sierra Club) argues that the NY-NJ-CT area's failure to attain the one-hour ozone NAAQS by its deadline of November 15, 2007 triggers penalty fees for 2007–2010 and contingency plan requirements under the Clean Air Act.

A. Sierra Club states that the NY-NJ-CT nonattainment area did not attain by its November 15, 2007 attainment date, and cites *South Coast,* 472 F.3d at 903, in support of its position that EPA must enforce certain anti-backsliding requirements, including section 185 fees. The commenter complains that EPA in its proposed determination of nonattainment for the NY-NJ-CT area (see 77 FR 3724) did not require payment of fees for 2007–2010.

Response: First, we wish to emphasize, as EPA stated in its proposal, that the purpose of this rulemaking action is to make four specific air quality determinations regarding whether the NY-NJ-CT area attained the one-hour and 1997 eight-hour ozone standards. While EPA's proposal noted that these determinations bear on one-hour anti-backsliding requirements for contingency measures and section 185 penalty fees, this action does not attempt to address or resolve all the implementation issues regarding those requirements. Thus at the outset, Sierra Club's position that EPA's specific rulemakings on air quality determinations must also include resolutions of all anti-backsliding implementation issues that may flow from them is incorrect. While EPA recognizes that the anti-backsliding requirement for the one-hour contingency measures and section 185 fees are linked to the determination of failure to meet the attainment deadline for that standard, EPA's rulemakings here regarding those determinations do not, and are not required to, dispose of all implementation issues for those requirements or for others, such as those raised in Sierra Club's comments regarding milestones and additional planning.

In its comments, Sierra Club argues that EPA's determination that the NY-NJ-CT area failed to attain by its one-hour ozone attainment deadline also requires EPA to decide here that it must retroactively collect penalties under section 185 for the period before EPA made its determination.[4] We disagree. Neither EPA's determination, nor the *South Coast* case, compels EPA to reach this conclusion or even to decide that issue here. EPA intends to address issues regarding one-hour anti-backsliding requirements in future rulemakings on implementation of the section 185 requirements for the NY-NJ-CT area. Nevertheless, we wish to state our preliminary views on Sierra Club's comments below. EPA's preliminary views are set forth in the remainder of the response below, and are not necessary to and are independent of its air quality determinations of attainment contained in this final rulemaking.

Sierra Club's comments quote at length from *South Coast, 472 F.3d at 902–903.* While EPA acknowledges that this decision established that section 185 fee requirements were to be included as anti-backsliding measures, the Court in that case did not direct any specific means of enforcement of these requirements, nor the method for determining whether an area failed to attain by its attainment date. That decision established only that the section 185 and contingency measure requirements were ''applicable.'' It did not establish or even address how those requirements were to be implemented.[5]

The D.C. Circuit, however, has previously upheld EPA's longstanding practice of making determinations of an area's failure to meet attainment deadlines solely through notice and comment rulemaking—*Sierra Club* v. *Whitman, 285 F.3d 63 (D.C. Cir. 2002).*[6] In that case—which similarly arose from a determination of failure of a one-hour ozone nonattainment area to meet its attainment deadline, the D.C. Circuit rejected a litigant's[7] demand to make the consequences of that determination retroactive to the time period before EPA made the determination. In that case, Sierra Club similarly argued that EPA's overdue determination that the St. Louis one-hour ozone nonattainment area failed to attain by its attainment deadline should apply retroactively, and that the Court should require retroactive reclassification of the area. The Court rejected Sierra Club's contention that EPA's rulemaking was not required to determine a failure to attain: ''No matter what the Sierra Club thinks the Clean Air Act or the APA required of EPA, the fact remains that 'EPA's established practice for making a final decision concerning nonattainment and reclassification is to conduct a rulemaking under the APA, not to issue a letter, a list, or some other informal document.' * * * [citations omitted.]'' The Court concluded: ''In other words, if there has not been a rulemaking there has not been an attainment determination.'' *285 F.3d at 66.*

The Court also refused to accept Sierra Club's assertion that the Court should compel EPA to give retroactive effect to its determination, resulting in reclassification as of the area's attainment date. The Court stated: ''Although EPA failed to make the nonattainment determination within the statutory time frame, Sierra Club's proposed solution only makes the situation worse. Retroactive relief would likely impose large costs on the States, which would face fines and suits for not implementing air pollution prevention plans [earlier], even though they were not on notice at the time.'' *285 F.3d at 68.*

While it is true that the Clean Air Act provides that both reclassification and penalty fees are consequences of failure to attain the ozone standard, the D.C. Circuit in *Sierra Club* recognized that these weighty consequences are not triggered until EPA makes a determination, after notice and comment rulemaking, of failure to attain. In that case the court also rejects

[4] As explained above and elsewhere in our response to comments, EPA disagrees with Sierra Club's contentions regarding retroactive collection of fees. As a technical point, however, we note that under section 185, the earliest year for which fees could ever have been required to be paid is the calendar year following the attainment date, November 15, 2007. Thus, it is clear that under no circumstances would fees be due for 2007.

[5] Moreover, as EPA explained above, those issues are ancillary to the determination of failure to attain the one-hour ozone standard that EPA is finalizing in this rulemaking.

[6] Sierra Club v. Whitman was discussed and distinguished in a recent D.C. Circuit decision that addressed retroactivity in a quite different context, where, unlike the situation here, EPA sought to give its regulations retroactive effect. *National Petrochemical and Refiners Ass'n* v. *EPA.* 630 F.3d 145, 163 (D.C. Cir. 2010), *rehearing denied* 643 F.3d 958 (D.C. Cir. 2011), *cert denied* 132 S. Ct. 571 (2011).

[7] In this case, also Sierra Club.

the view that adverse consequences from the determination should be imposed retroactively, especially if they would, as here, subject the States to additional burdens caused by retroactive requirements that were not triggered prior to conclusion of the rulemaking process.

Several features of our rulemaking for the NY-NJ-CT area provide additional grounds for application of a position similar to that which the court took in the St. Louis Sierra Club case. In the case of St. Louis, when the question of retroactive application arose, the area remained in nonattainment of the one-hour standard, which was also still the only standard in effect. Here, unlike St. Louis, EPA has determined that the NY-NJ-CT area is currently attaining both the one-hour and eight-hour standards, and thus there is significantly less reason to consider imposing retroactive penalties that are intended to bring about the attainment that has already occurred.

Sierra Club here argues, unpersuasively, that the *South Coast* opinion supports retroactive imposition of penalties, quoting the Court's statement that, unless section 185 requirements were applicable, ''a state could go unpenalized without ever attaining even the original NAAQS * * *.'' *472 F.3d at 903.* Here, however, this possibility does not exist. EPA's final determinations in this rulemaking establish that the NY-NJ-CT area has in fact attained not only the original one-hour standard, but also the 1997 eight-hour NAAQS.

Sierra Club quotes the Court's statement in *South Coast* that ''Congress set the penalty deadline well into the future, giving states and industry ample notice and sufficient incentives to avoid the penalties.'' *372 F.3d at 903.* Notice of the existence of penalty provisions, however, is not the same as notice that these provisions have been triggered. As the D.C. Circuit recognized in *Sierra Club* v. *EPA,* only when EPA issues a final notice determining that an area has failed to attain by the attainment date can that failure be definitively established. The case of the NY-NJ-CT area presents a particularly compelling context in which to apply this principle. The NY-NJ-CT area has been attaining the one-hour standard since 2010 and the eight-hour standard for the time period 2007–2010, and data for 2011 continues this trend. No incentives—and certainly no penalties—are required for the area to reach attainment,[8] a goal that the area has met, preserved and exceeded. Under these circumstances, and based on the D.C. Circuit's and EPA's long held position on the issue of retroactive consequences of determinations of failure to attain, EPA cannot see a reason to impose penalties on sources in the NY-NJ-CT area. As explained above, EPA is determining that the area is currently, and has for some time been, attaining both the one-hour and eight-hour ozone standards. Thus no anti-backsliding purpose is served by retroactive imposition of fees for a failure to meet a deadline for a revoked standard—under circumstances that existed years ago, which have since been eclipsed by continuous attainment. EPA believes that compelling the States and sources to address old penalties now would also divert attention and resources from efforts to achieve current, forward-looking environmental goals, including the stricter 2008 ozone standard. In these circumstances, giving retroactive effect to EPA's determination of failure to attain the standard here would be unreasonable, and it would, as the Court held in *Sierra Club* v. *Whitman,* ''only mak[e] the situation worse.''

B. Sierra Club asserts that the NY-NJ-CT nonattainment area is subject to contingency plan requirements for failure to attain the one-hour standard and that EPA failed to impose this requirement on the States. Sierra Club argues that EPA must ensure that the contingency measures approved for New York, New Jersey, and Connecticut in 67 FR 5170, 67 FR 5152, and 66 FR 63921 are implemented and enforced, and Sierra Club contends that EPA has improperly failed to carry out this obligation. Sierra Club asserts that EPA's determination that the area has attained the one-hour ozone standard (Clean Data Determination) does not allow removal of these contingency measures, which Sierra Club states became applicable in 2007 and which must remain in place to prevent backsliding.

Response: Contingency measures for the one-hour ozone standard were previously approved and have been implemented in the NY-NJ-CT nonattainment area. See for New York: 67 FR 5170 (February 4, 2002) and 40 CFR 52.1683(i)(3); for New Jersey: 67 FR 5152 (February 4, 2002) and 40 CFR 52.1582(h)(4); for Connecticut: 66 FR 63921 (December 11,2001) and 40 CFR 52.377. There is no need for EPA to require the states to implement the contingency measures, because all the identified measures are part of the applicable SIP and have already been implemented. The States have not requested removal of the contingency measures from their respective SIPs and therefore they continue in effect. EPA has never proposed to remove the measures approved as contingency measures in this area. The States would have to request a SIP revision if they wanted to remove these measures from their applicable SIP and would have to demonstrate compliance with section 110(l). Thus, the measures identified as contingency measures continue to remain in SIP. Moreover, as explained in EPA's Clean Data Policy,[9] the purpose of contingency measures for failure to attain is linked to attainment. EPA in this rulemaking has determined that the area has already attained the one-hour ozone standard, and therefore no additional contingency measures are needed.

C. Sierra Club argues that the NY-NJ-CT ozone nonattainment area is subject to the milestone one-hour ozone anti-backsliding requirements of the Act. The commenter asserts that EPA errs in failing to impose rate of progress (ROP) or reasonable further progress (RFP) milestones on the nonattainment area. The commenter asserts that 42 U.S.C. 7511(d) requires the states to submit revised SIPs that incorporate updated ROP plans for the one-hour ozone standard.

Response: As stated in the proposed rulemaking, EPA has previously approved one-hour RFP and ROP plans for the NY-NJ-CT area. See for New York: 67 FR 5170 February 4, 2002 and 40 CFR 52.1683(i)(2); for New Jersey: 67 FR 5152 February 4, 2002 and 40 CFR 52.1582(h)(3); for Connecticut: 66 FR 63921 December 11, 2001 and 40 CFR 52.377. Nowhere in its January 25, 2012 proposal (77 FR 3720), did EPA propose to remove from the approved SIPs the measures that resulted in satisfying the ROP or RFP plan requirements for the area. Nor have the States requested removal of those provisions.

Sierra Club's comment relies on section 181(b)(4)(A), and quotes language providing that, if a severe area fails to attain, certain reductions continue '' until the standard is attained.'' Here, EPA's determinations in this rulemaking establish that the area has attained the one-hour ozone standard, so any such obligation would now be at an end. And, as explained in

[8] Sierra Club appears to recognize this, since it does not request EPA to impose penalties for the time period after the area attained the standard (2010 to the present).

[9] Memorandum from John S. Sietz, Director, OAQPS, dated May 10, 1995, entitled ''Reasonable Further Progress, Attainment Demonstration, and Related Requirements for Ozone Nonattainment Areas Meeting the Ozone National Ambient Air Quality Standard'' (''Clean Data Policy'').

Comment 3A, no prior failure to attain was established until EPA's final determination in this rulemaking (see response to Comment 3A above). In this rulemaking, EPA is finalizing its determinations that the NY-NJ-CT nonattainment area is currently attaining both the one-hour and eight-hour ozone NAAQSs. Under 40 CFR 51.918 and the interpretation set forth in EPA's longstanding Clean Data Policy, these determinations suspend the obligations to submit any outstanding planning requirements, including ROP. Based on the monitoring data that show attainment of both ozone standards, there is no need to require the States to revise or submit new ROP plans or new RFP milestones for the one-hour ozone SIPs. Additional ozone reductions have resulted from implementation of the eight-hour ozone standard. EPA has approved ROPs for the 1997 ozone standard SIPs in Connecticut, New Jersey and New York, which function to further reduce ozone precursors to a greater extent than would be required by submission of an additional RFP for the one-hour ozone standard.

4. Sierra Club contends that the NY-NJ-CT ozone nonattainment area must submit a revised one-hour ozone SIP and asserts that EPA's failure to require a new SIP for the NY-NJ-CT area upon finalizing its proposed determination of nonattainment is improper and contrary to law.

Response: We disagree that EPA's determination here that the NY-NJ-CT area failed to attain the one-hour ozone standard triggers any CAA section 179(d) requirement to prepare and submit SIP revisions. A new section 179(d) ozone plan, triggered by section 179(c) is not an applicable anti-backsliding requirement under EPA's anti-backsliding regulations. As EPA has explained in other rulemakings, only those anti-backsliding requirements that were specifically retained are applicable, and the requirements of section 179(c) and (d) are not included. See 76 FR 82133 (December 30, 2011). As EPA stated in its proposal, the only anti-backsliding measures that pertain to this determination of failure to meet the one-hour deadline are one-hour contingency measures for failure to attain and section 185 penalty fees.

Moreover, under EPA's Clean Data Policy EPA's determination that the area is currently attaining the one-hour ozone standard obviates the need for submission of any planning requirements related to attainment of the standard.

IV. Final Actions

EPA is making four separate and independent determinations related to the NY-NJ-CT one-hour and 1997 eight-hour ozone nonattainment areas. These determinations are based upon complete, quality-assured and certified ozone monitoring data. First, with respect to the one-hour ozone standard, and pursuant to EPA's authority to ensure implementation of one-hour ozone anti-backsliding requirements and CAA section 301, EPA is determining that data for 2005–2007 show that the NY-NJ-CT area previously failed to attain the one-hour ozone standard by its applicable November 15, 2007 attainment deadline. Second, and more importantly, EPA is determining that the NY-NJ-CT area is currently attaining the one-hour ozone standard, based on more recent complete, quality-assured and certified data for 2008–2010. Quality-assured ozone monitoring data in the AQS for 2011 indicate the area continues to attain the revoked one-hour ozone standard.

Third, with respect to the 1997 eight-hour ozone standard, in accordance with section 181(b) of the CAA, EPA is determining that complete, quality-assured and certified ozone monitoring data for 2007–2009 show the NY-NJ-CT eight-hour ozone nonattainment area attained the 1997 eight-hour ozone standard by its June 15, 2010 attainment deadline. Fourth, EPA is also determining that the NY-NJ-CT eight-hour ozone nonattainment area currently continues to attain the eight-hour ozone NAAQS, based on complete, quality-assured and certified data for 2008–2010. Quality-assured ozone monitoring data in the AQS for 2011 indicate the area continues to attain the 1997 eight-hour ozone standard.

As provided in 40 CFR 51.918, EPA's determination that the area has attained the eight-hour ozone standard suspends the requirements under section 182(b)(1) for submission of the attainment demonstration, reasonable further progress plan, contingency measures and any other planning SIP relating to attainment of the 1997 eight-hour NAAQS. This suspension of requirements is effective for so long as the area continues to attain the 1997 eight-hour ozone standard.

For the reasons stated in its proposed notice and response to comments here, EPA is also withdrawing the May 8, 2009 proposed disapprovals of Connecticut's and New Jersey's eight-hour ozone attainment demonstrations for the NY-NJ-CT eight-hour ozone nonattainment area.

V. Statutory and Executive Order Reviews

These actions, make attainment determinations based on air quality and result in the suspension of certain Federal requirements, will not impose additional requirements beyond those imposed by state law, or will not impose any requirements beyond those required by Federal statute. For these reasons, these actions:

- Are not ''significant regulatory actions'' subject to review by the Office of Management and Budget under Executive Order 12866 (58 FR 51735, October 4, 1993);
- Do not impose an information collection burden under the provisions of the Paperwork Reduction Act (44 U.S.C. 3501 *et seq.*);
- Are certified as not having a significant economic impact on a substantial number of small entities under the Regulatory Flexibility Act (5 U.S.C. 601 *et seq.*);
- Do not contain any unfunded mandate or significantly or uniquely affect small governments, as described in the Unfunded Mandates Reform Act of 1995 (Pub. L. 104–4);
- Do not have Federalism implications as specified in Executive Order 13132 (64 FR 43255, August 10, 1999);
- Are not economically significant regulatory actions based on health or safety risks subject to Executive Order 13045 (62 FR 19885, April 23, 1997);
- Are not significant regulatory actions subject to Executive Order 13211 (66 FR 28355, May 22, 2001);
- Are not subject to requirements of Section 12(d) of the National Technology Transfer and Advancement Act of 1995 (15 U.S.C. 272 note) because application of those requirements would be inconsistent with the Clean Air Act; and
- Do not provide EPA with the discretionary authority to address, as appropriate, disproportionate human health or environmental effects, using practicable and legally permissible methods, under Executive Order 12898 (59 FR 7629, February 16, 1994).

In addition, this rule does not have tribal implications as specified by Executive Order 13175 (65 FR 67249, November 9, 2000), because the SIP is not approved to apply in Indian country located in the state, and EPA notes that it will not impose substantial direct costs on tribal governments or preempt tribal law.

The Congressional Review Act, 5 U.S.C. 801 *et seq.,* as added by the Small Business Regulatory Enforcement Fairness Act of 1996, generally provides

that before a rule may take effect, the agency promulgating the rule must submit a rule report, which includes a copy of the rule, to each House of the Congress and to the Comptroller General of the United States. EPA will submit a report containing this action and other required information to the U.S. Senate, the U.S. House of Representatives, and the Comptroller General of the United States prior to publication of the rule in the **Federal Register**. A major rule cannot take effect until 60 days after it is published in the **Federal Register**. This action is not a ''major rule'' as defined by 5 U.S.C. 804(2).

Under section 307(b)(1) of the Clean Air Act, petitions for judicial review of this action must be filed in the United States Court of Appeals for the appropriate circuit by August 17, 2012. Filing a petition for reconsideration by the Administrator of this final rule does not affect the finality of this action for the purposes of judicial review nor does it extend the time within which a petition for judicial review may be filed, and shall not postpone the effectiveness of such rule or action. This action may not be challenged later in proceedings to enforce its requirements. (See section 307(b)(2).)

List of Subjects in 40 CFR Part 52

Environmental protection, Air pollution control, Nitrogen oxides, Ozone, Volatile organic compounds, Incorporation by reference, Intergovernmental relations, Reporting and recordkeeping requirements.

Dated: May 15, 2012.

Judith A. Enck,

Regional Administrator, Region 2.

Dated: May 27, 2012.

H. Curtis Spalding,

Regional Administrator, Region 1.

Part 52, chapter I, title 40 of the Code of Federal Regulations is amended as follows:

PART 52—[AMENDED]

■ 1. The authority citation for part 52 continues to read as follows:

Authority: 42 U.S.C. 7401 *et seq.*

Subpart H—Connecticut

■ 2. Section 52.377 is amended by adding paragraphs (j) and (k) to read as follows:

§ 52.377 Control strategy: Ozone.

* * * * *

(j) Determination of Attainment for the One-Hour Ozone Standard. Effective July 18, 2012, EPA is determining that the New York-Northern New Jersey-Long Island (NY-NJ-CT) one-hour ozone nonattainment area did not meet its applicable one-hour ozone attainment date of November 15, 2007, based on 2005–2007 complete, quality-assured and certified ozone monitoring data. Separate from and independent of this determination, EPA is determining that the New York-Northern New Jersey-Long Island (NY-NJ-CT) one-hour ozone nonattainment area has attained the one-hour ozone standard, based on 2008–2010 complete, quality-assured and certified ozone monitoring data at all monitoring sites in the area and data showing the area continued to attain through 2011.

(k) Determination of Attainment for the Eight-Hour Ozone Standard. Effective July 18, 2012 EPA is determining, that complete, quality-assured and certified ozone monitoring data for 2007–2009 show the NY-NJ-CT eight-hour ozone nonattainment area attained the 1997 eight-hour ozone standard by its June 15, 2010 attainment deadline. Therefore, EPA has met the requirement pursuant to CAA section 181(b)(2)(A) to determine, based on the area's air quality data as of the attainment date, whether the area attained the standard. EPA also determined that the NY-NJ-CT nonattainment area will not be reclassified for failure to attain by its applicable attainment date under section 181(b)(2)(A). EPA is also determining that the NY-NJ-CT eight-hour ozone nonattainment area currently continues to attain the eight-hour ozone NAAQS, based on complete, quality-assured and certified data for 2008–2010 and data through 2011. This determination, in accordance with 40 CFR 51.918, suspends the requirements for this area to submit an attainment demonstration, associated reasonably available control measures, a reasonable further progress plan, contingency measures, and other planning SIPs related to attainment of the standard for as long as this area continues to meet the 1997 annual eight-hour ozone NAAQS.

Subpart FF—New Jersey

■ 3. Section 52.1576 is amended by designating the existing text as paragraph (a), adding and reserving paragraph (b), and adding new paragraphs (c) and (d) to read as follows:

§ 52.1576 Determinations of attainment.

* * * * *

(c) Based upon EPA's review of the air quality data for the three-year period 2005 to 2007, EPA determined, as of June 18, 2012, that the New York-Northern New Jersey-Long Island (NY-NJ-CT) one-hour ozone nonattainment area did not meet its applicable one-hour ozone attainment date of November 15, 2007. Separate from and independent of this determination, based on 2008–2010 complete, quality-assured ozone monitoring data at all monitoring sites in the area, and data for 2011, EPA determined, as of June 18, 2012, that the NY-NJ-CT one-hour ozone nonattainment area has attained the one-hour ozone standard.

(d) Based upon EPA's review of complete, quality-assured and certified air quality data for the three-year period 2007 to 2009, and data for 2011, EPA determined, as of June 18, 2012, that the New York-Northern New Jersey-Long Island (NY-NJ-CT) eight-hour ozone moderate nonattainment area attained the 1997 eight-hour ozone NAAQS by the applicable attainment date of June 15, 2010. Therefore, EPA has met the requirement pursuant to CAA section 181(b)(2)(A) to determine, based on the area's air quality data as of the attainment date, whether the area attained the standard. EPA also determined that the NY-NJ-CT nonattainment area will not be reclassified for failure to attain by its applicable attainment date under section 181(b)(2)(A).

■ 4. Section 52.1582 is amended by designating paragraph (n) as paragraph (n)(1), and adding new paragraph (n)(2) to read as follows:

§ 52.1582 Control strategy and regulations: Ozone.

* * * * *

(n) *Attainment determination.* (1) * * *

(2) EPA has determined, as of June 18, 2012, that based on 2007 to 2009 complete, quality-assured and certified ambient air quality data, additional data showing continued attainment through 2011, the New York-Northern New Jersey-Long Island, NY-NJ-CT, eight-hour ozone moderate nonattainment area has attained the 1997 eight-hour ozone NAAQS. This determination, in accordance with 40 CFR 51.918, suspends the requirements for this area to submit an attainment demonstration, associated reasonably available control measures, a reasonable further progress plan, contingency measures, and other planning SIPs related to attainment of the standard for as long as this area continues to meet the 1997 annual eight-hour ozone NAAQS.

Subpart HH—New York

■ 5. Section 52.1679 is added to read as follows:

§ 52.1679 Determinations of attainment.

(a) Based upon EPA's review of complete, quality-assured air quality data for the 3-year period 2005 to 2007, EPA determined, as of June 18, 2012, that the New York-Northern New Jersey-Long Island (NY-NJ-CT) one-hour ozone nonattainment area did not meet its applicable one-hour ozone attainment date of November 15, 2007. Separate from and independent of this determination, based on 2008–2010 complete, quality-assured ozone monitoring data at all monitoring sites in the area, and data for 2011, EPA determined, as of June 18, 2012, that the NY-NJ-CT one-hour ozone nonattainment area met the one-hour ozone NAAQS.

(b) Based upon EPA's review of complete, quality-assured and certified air quality data for the 3-year period 2007 to 2009, and data for 2011, EPA determined, as of June 18, 2012, that the New York-Northern New Jersey-Long Island (NY-NJ-CT) eight-hour ozone moderate nonattainment area attained the 1997 eight-hour ozone NAAQS by the applicable attainment date of June 15, 2010. Therefore, EPA has met the requirement pursuant to CAA section 181(b)(2)(A) to determine, based on the area's air quality data as of the attainment date, whether the area attained the standard. EPA also determined that the NY-NJ-CT nonattainment area will not be reclassified for failure to attain by its applicable attainment date under section 181(b)(2)(A).

■ 6. Section 52.1683 is amended by adding new paragraph (f)(2)(viii) to read as follows:

§ 52.1683 Control strategy: Ozone.

* * * * *

(f) * * *

(2) * * *

(viii) New York-Northern New Jersey-Long Island, NY-NJ-CT, eight-hour ozone moderate nonattainment area (consisting of the Bronx, Kings, Nassau, New York, Queens, Richmond, Rockland, Suffolk and Westchester Counties) as of June 15, 2010 and data showing the area continued to attain through 2011.

* * * * *

[FR Doc. 2012–14716 Filed 6–15–12; 8:45 am]

BILLING CODE 6560–50–P

EVIRONMENTAL PROTECTION AGENCY

40 CFR Part 711

[EPA–HQ–OPPT–2009–0187; FRL–9353–1]

RIN 2070–AJ43

TSCA Inventory Update Reporting Modifications; Chemical Data Reporting; 2012 Submission Period Extension

AGENCY: Environmental Protection Agency (EPA).

ACTION: Final rule.

SUMMARY: EPA is amending the Toxic Substances Control Act (TSCA) Chemical Data Reporting (CDR) regulations by extending the submission deadline for 2012 reports from June 30, 2012 to August 13, 2012. This is a one-time extension for the 2012 submission period only. The CDR regulations require manufacturers and importers of certain chemical substances included on the TSCA Chemical Substance Inventory (TSCA Inventory) to report current data on the manufacturing, processing, and use of the chemical substances.

DATES: This final rule is effective June 18, 2012.

ADDRESSES: The docket for this action, identified by docket identification (ID) number (No.) EPA–HQ–OPPT–2009–0187, is available either electronically through *http://www.regulations.gov* or in hard copy at the Pollution Prevention and Toxics (OPPT) Docket, Environmental Protection Agency Docket Center (EPA/DC), EPA West Bldg., Rm. 3334, 1301 Constitution Ave. NW., Washington, DC. The Public Reading Room is open from 8:30 a.m. to 4:30 p.m., Monday through Friday, excluding legal holidays. The telephone number for the Public Reading Room is (202) 566–1744, and the telephone number for the OPPT Docket is (202) 566–0280. Please review the visitor instructions and additional information about the docket available at *http://www.epa.gov/dockets.*

FOR FURTHER INFORMATION CONTACT: Chenise Farquharson, Chemical Control Division (7405M), Office of Pollution Prevention and Toxics, Environmental Protection Agency, 1200 Pennsylvania Ave. NW., Washington, DC 20460–0001; telephone number: (202) 564–7768; fax number: (202) 564–4775; email address: *farquharson.chenise@epa.gov.*

For general information contact: The TSCA-Hotline, ABVI-Goodwill, 422 South Clinton Ave., Rochester, NY 14620; telephone number: (202) 554–1404; email address: *TSCA-Hotline@epa.gov.*

SUPPLEMENTARY INFORMATION:

I. Does this action apply to me?

You may be potentially affected by this action if you manufacture (including manufacture as a byproduct) or import chemical substances listed on the TSCA Inventory. Potentially affected entities may include, but are not limited to:

- Chemical manufacturers and importers (NAICS codes 325 and 324110, e.g., chemical manufacturing and processing and petroleum refineries).
- Chemical users and processors who may manufacture a byproduct chemical substance (NAICS codes 22, 322, 331, and 3344, e.g., utilities, paper manufacturing, primary metal manufacturing, and semiconductor and other electronic component manufacturing).

This listing is not intended to be exhaustive, but rather provides a guide for readers regarding entities likely to be affected by this action. Other types of entities not listed in this unit could also be affected. The North American Industrial Classification System (NAICS) codes have been provided to assist you and others in determining whether this action might apply to certain entities. If you have any questions regarding the applicability of this action to a particular entity, consult the technical person listed under **FOR FURTHER INFORMATION CONTACT**.

II. Background

A. What action is the Agency taking?

In the August 16, 2011, final rule entitled, ''TSCA Inventory Update Reporting Modifications; Chemical Data Reporting'' (76 FR 50816, August 16, 2011) (FRL–8872–9), EPA designated the 2012 CDR submission period to be February 1, 2012 to June 30, 2012. EPA is issuing this amendment to extend the deadline for 2012 CDR submission reports until August 13, 2012.

The Agency is taking this action in response to concerns raised by the regulated community about their ability to submit the required information within the prescribed period. Written requests to extend the CDR submission period are included in the docket (see **ADDRESSES**). The compelling concerns raised by industry include the timing of responses to inquiries about regulatory interpretations, particularly for byproduct chemical substances, and issues associated with several aspects of electronic reporting.

EPA believes it is appropriate to extend the reporting period to allow the reporters associated with byproducts to understand and determine their reporting obligations and to allow the regulated community to adjust to electronic reporting and submit their reports.

With respect to the timing of this action, the need for the Agency to extend the deadline arose, in part, as a result of issues experienced by the regulated community with several aspects of electronic reporting that were brought to the Agency's attention only recently.

B. What is the Agency's authority for taking this action?

The CDR rule was issued pursuant to the authority of TSCA section 8(a), 15 U.S.C. 2607(a). Under section 553(b)(3)(B) of the Administrative Procedure Act (APA), 5 U.S.C. 553(b)(3)(B), the Agency may issue a final rule without a prior proposal if it finds that notice and public participatory procedures are impracticable, unnecessary, or contrary to the public interest. In this case, for the extension sought, the Agency does find that normal notice and public process rulemaking is impracticable. Given that the current reporting deadline is June 30, 2012, it is impracticable to follow notice and comment procedures on an extension of that deadline, because that process would not allow the rule to be finalized before the current reporting deadline. As discussed in this unit, the Agency only recently learned that the regulated community was having difficulty submitting their reports through the required electronic reporting mechanism. This action does not alter the substantive CDR reporting requirements in any way. The Agency also believes the one-time extension will not result in a significant delay in the processing and availability of CDR information to potential users. Further, this action is consistent with the public interest because it is designed to facilitate compliance with the CDR rule and to ensure that the 2012 collection includes accurate data on chemical manufacturing, processing, and use in the United States. Finally, any impact on the regulated community is expected to be beneficial given that the one-time extension provides additional time to submit accurate CDR reports to EPA.

Similarly, under APA section 553(d), 5 U.S.C. 553(d), the Agency may make a rule immediately effective ''for good cause found and published with the rule.'' For the reasons discussed in this unit, EPA believes that there is ''good cause'' to make this amendment effective upon publication in the **Federal Register**.

III. Statutory and Executive Order Reviews

A. Executive Order 12866 and Executive Order 13563

This action is classified as a final rule because it makes an amendment to the Code of Federal Regulations (CFR). The amendment to the CFR is necessary to allow for a one-time extension to the 2012 CDR reporting period. This action does not impose any new requirements or amend substantive requirements. This action is not a ''significant regulatory action'' and is therefore not subject to review by the Office of Management and Budget (OMB) under Executive Order 12866, entitled ''Regulatory Planning and Review'' (58 FR 51735, October 4, 1993) and Executive Order 13563 entitled ''Improving Regulation and Regulatory Review'' (76 FR 3821, January 21, 2011).

B. Paperwork Reduction Act

This final rule does not contain any information collections subject to OMB approval under the Paperwork Reduction Act (PRA), 44 U.S.C. 3501 *et seq.*

C. Regulatory Flexibility Act

This final rule is not subject to the Regulatory Flexibility Act (RFA), 5 U.S.C. 601 *et seq.* The RFA applies only to rules subject to notice and comment rulemaking requirements under the APA, 5 U.S.C. 553, or any other statute. This rule is not subject to notice and comment requirements under the APA because the Agency has invoked the APA ''good cause'' exemption.

D. Unfunded Mandates Reform Act and Executive Orders 13132 and 13175

This action will not have substantial direct effects on State or tribal governments, on the relationship between the Federal Government and States or Indian tribes, or on the distribution of power and responsibilities between the Federal Government and States or Indian tribes. As a result, no action is required under Executive Order 13132, entitled ''Federalism'' (64 FR 43255, August 10, 1999), or under Executive Order 13175, entitled ''Consultation and Coordination with Indian Tribal Governments'' (65 FR 67249, November 9, 2000). Nor does it impose any enforceable duty or contain any unfunded mandate as described under Title II of the Unfunded Mandates Reform Act, 2 U.S.C. 1531–1538.

E. Executive Orders 13045, 13211, and 12898

This action is not a ''significant regulatory action'' as defined by Executive Order 12866. As a result, this action is not subject to Executive Order 13045, entitled ''Protection of Children from Environmental Health Risks and Safety Risks'' (62 FR 19885, April 23, 1997) and Executive Order 13211 entitled ''Actions Concerning Regulations That Significantly Affect Energy Supply, Distribution, or Use'' (66 FR 28355, May 22, 2001). In addition, this action also does not require any special considerations under Executive Order 12898 entitled ''Federal Actions to Address Environmental Justice in Minority Populations and Low-Income Populations'' (59 FR 7629, February 16, 1994).

F. National Technology Transfer and Advancement Act

This action does not involve any technical standards that would require Agency consideration of voluntary consensus standards pursuant to section 12(d) of the National Technology Transfer and Advancement Act, 15 U.S.C. 272 note.

IV. Congressional Review Act

Pursuant to the Congressional Review Act, 5 U.S.C. 801 *et seq.,* EPA will submit a report containing this rule and other required information to the U.S. Senate, the U.S. House of Representatives, and the Comptroller General of the United States prior to publication of the rule in the **Federal Register**. This action is not a ''major rule'' as defined by 5 U.S.C. 804(2). Under CRA section 808, an agency may make a rule effective sooner than otherwise provided by the CRA if the agency makes a good cause finding under the APA that notice and public procedure is impracticable, unnecessary, or contrary to the public interest. This determination must be supported by a brief statement, 5 U.S.C. 808(2). As discussed in Unit II.B., EPA has made such a good cause finding for this rule and established the effective date that is identified under **DATES**.

List of Subjects in 40 CFR Part 711

Environmental protection, Chemicals, Confidential Business Information (CBI), Hazardous materials, Importer, Manufacturer, Reporting and recordkeeping requirements.

Dated: June 11, 2012.

James Jones,

Acting Assistant Administrator, Office of Chemical Safety and Pollution Prevention.

Therefore, 40 CFR chapter I is amended as follows:

PART 711—[AMENDED]

■ 1. The authority citation for part 711 continues to read as follows:

Authority: 15 U.S.C. 2607(a).

■ 2. In § 711.20, revise the second sentence to read as follows:

§ 711.20 When to report.

* * * The 2012 CDR submission period is from February 1, 2012 to August 13, 2012. * * *

[FR Doc. 2012–14774 Filed 6–15–12; 8:45 am]

BILLING CODE 6560–50–P

DEPARTMENT OF HOMELAND SECURITY

Federal Emergency Management Agency

44 CFR Part 64

[Docket ID FEMA–2012–0003; Internal Agency Docket No. FEMA–8233]

Suspension of Community Eligibility

AGENCY: Federal Emergency Management Agency, DHS.

ACTION: Final rule.

SUMMARY: This rule identifies communities where the sale of flood insurance has been authorized under the National Flood Insurance Program (NFIP) that are scheduled for suspension on the effective dates listed within this rule because of noncompliance with the floodplain management requirements of the program. If the Federal Emergency Management Agency (FEMA) receives documentation that the community has adopted the required floodplain management measures prior to the effective suspension date given in this rule, the suspension will not occur and a notice of this will be provided by publication in the **Federal Register** on a subsequent date.

DATES: *Effective Dates:* The effective date of each community's scheduled suspension is the third date (''Susp.'') listed in the third column of the following tables.

FOR FURTHER INFORMATION CONTACT: If you want to determine whether a particular community was suspended on the suspension date or for further information, contact David Stearrett, Federal Insurance and Mitigation Administration, Federal Emergency Management Agency, 500 C Street SW., Washington, DC 20472, (202) 646–2953.

SUPPLEMENTARY INFORMATION: The NFIP enables property owners to purchase Federal flood insurance that is not otherwise generally available from private insurers. In return, communities agree to adopt and administer local floodplain management measures aimed at protecting lives and new construction from future flooding. Section 1315 of the National Flood Insurance Act of 1968, as amended, 42 U.S.C. 4022, prohibits the sale of NFIP flood insurance unless an appropriate public body adopts adequate floodplain management measures with effective enforcement measures. The communities listed in this document no longer meet that statutory requirement for compliance with program regulations, 44 CFR part 59. Accordingly, the communities will be suspended on the effective date in the third column. As of that date, flood insurance will no longer be available in the community. We recognize that some of these communities may adopt and submit the required documentation of legally enforceable floodplain management measures after this rule is published but prior to the actual suspension date. These communities will not be suspended and will continue to be eligible for the sale of NFIP flood insurance. A notice withdrawing the suspension of such communities will be published in the **Federal Register**.

In addition, FEMA publishes a Flood Insurance Rate Map (FIRM) that identifies the Special Flood Hazard Areas (SFHAs) in these communities. The date of the FIRM, if one has been published, is indicated in the fourth column of the table. No direct Federal financial assistance (except assistance pursuant to the Robert T. Stafford Disaster Relief and Emergency Assistance Act not in connection with a flood) may be provided for construction or acquisition of buildings in identified SFHAs for communities not participating in the NFIP and identified for more than a year on FEMA's initial FIRM for the community as having flood-prone areas (section 202(a) of the Flood Disaster Protection Act of 1973, 42 U.S.C. 4106(a), as amended). This prohibition against certain types of Federal assistance becomes effective for the communities listed on the date shown in the last column. The Administrator finds that notice and public comment procedures under 5 U.S.C. 553(b), are impracticable and unnecessary because communities listed in this final rule have been adequately notified.

Each community receives 6-month, 90-day, and 30-day notification letters addressed to the Chief Executive Officer stating that the community will be suspended unless the required floodplain management measures are met prior to the effective suspension date. Since these notifications were made, this final rule may take effect within less than 30 days.

National Environmental Policy Act. This rule is categorically excluded from the requirements of 44 CFR Part 10, Environmental Considerations. No environmental impact assessment has been prepared.

Regulatory Flexibility Act. The Administrator has determined that this rule is exempt from the requirements of the Regulatory Flexibility Act because the National Flood Insurance Act of 1968, as amended, Section 1315, 42 U.S.C. 4022, prohibits flood insurance coverage unless an appropriate public body adopts adequate floodplain management measures with effective enforcement measures. The communities listed no longer comply with the statutory requirements, and after the effective date, flood insurance will no longer be available in the communities unless remedial action takes place.

Regulatory Classification. This final rule is not a significant regulatory action under the criteria of section 3(f) of Executive Order 12866 of September 30, 1993, Regulatory Planning and Review, 58 FR 51735.

Executive Order 13132, Federalism. This rule involves no policies that have federalism implications under Executive Order 13132.

Executive Order 12988, Civil Justice Reform. This rule meets the applicable standards of Executive Order 12988.

Paperwork Reduction Act. This rule does not involve any collection of information for purposes of the Paperwork Reduction Act, 44 U.S.C. 3501 *et seq.*

List of Subjects in 44 CFR Part 64

Flood insurance, Floodplains.

Accordingly, 44 CFR part 64 is amended as follows:

PART 64—[AMENDED]

■ 1. The authority citation for Part 64 continues to read as follows:

Authority: 42 U.S.C. 4001 *et seq.;* Reorganization Plan No. 3 of 1978, 3 CFR, 1978 Comp.; p. 329; E.O. 12127, 44 FR 19367, 3 CFR, 1979 Comp.; p. 376.

§ 64.6 [Amended]

■ 2. The tables published under the authority of § 64.6 are amended as follows:

State and location	Community No.	Effective date authorization/cancellation of sale of flood insurance in community	Current effective map date	Date certain federal assistance no longer available in SFHAs
Region II				
New York:				
Andes, Town of, Delaware County.	360188	August 28, 1975, Emerg; May 1, 1985, Reg; June 19, 2012, Susp.	June 19, 2012 ..	June 19, 2012.
Bovina, Town of, Delaware County.	360190	August 12, 1975, Emerg; May 1, 1985, Reg; June 19, 2012, Susp.	.....do*	Do.
Colchester, Town of, Delaware County.	360191	September 8, 1975, Emerg; January 3, 1986, Reg; June 19, 2012, Susp.	.....do	Do.
Davenport, Town of, Delaware County.	360192	July 7, 1975, Emerg; May 15, 1985, Reg; June 19, 2012, Susp.	.....do	Do.
Delhi, Town of, Delaware County.	360193	August 5, 1975, Emerg; July 18, 1985, Reg; June 19, 2012, Susp.	.....do	Do.
Delhi, Village of, Delaware County.	361572	February 11, 1974, Emerg; July 18, 1985, Reg; June 19, 2012, Susp.	.....do	Do.
Deposit, Town of, Delaware County.	360195	September 5, 1975, Emerg; March 18, 1986, Reg; June 19, 2012, Susp.	.....do	Do.
Fleischmanns, Village of, Delaware County.	360197	December 17, 1975, Emerg; January 17, 1986, Reg; June 19, 2012, Susp.	.....do	Do.
Franklin, Town of, Delaware County.	360198	July 2, 1975, Emerg; April 1, 1988, Reg; June 19, 2012, Susp.	.....do	Do.
Franklin, Village of, Delaware County.	360199	August 8, 1975, Emerg; August 1, 1987, Reg; June 19, 2012, Susp.	.....do	Do.
Hamden, Town of, Delaware County.	360200	September 12, 1975, Emerg; March 4, 1986, Reg; June 19, 2012, Susp.	.....do	Do.
Hancock, Village of, Delaware County.	360202	June 19, 1975, Emerg; December 10, 1982, Reg; June 19, 2012, Susp.	.....do	Do.
Harpersfield, Town of, Delaware County.	360203	August 15, 1975, Emerg; June 5, 1985, Reg; June 19, 2012, Susp.	.....do	Do.
Kortright, Town of, Delaware County.	360205	July 28, 1975, Emerg; May 15, 1985, Reg; June 19, 2012, Susp.	.....do	Do.
Masonville, Town of, Delaware County.	360206	September 17, 1975, Emerg; November 1, 1985, Reg; June 19, 2012, Susp.	.....do	Do.
Meredith, Town of, Delaware County.	360207	July 21, 1976, Emerg; May 15, 1985, Reg; June 19, 2012, Susp.	.....do	Do.
Middletown, Town of, Delaware County.	360209	July 30, 1976, Emerg; May 15, 1985, Reg; June 19, 2012, Susp.	.....do	Do.
Roxbury, Town of, Delaware County.	361036	August 1, 1975, Emerg; May 15, 1985, Reg; June 19, 2012, Susp.	.....do	Do.
Sidney, Town of, Delaware County.	360210	July 1, 1975, Emerg; September 30, 1987, Reg; June 19, 2012, Susp.	.....do	Do.
Stamford, Town of, Delaware County.	360212	September 28, 1977, Emerg; October 1, 1986, Reg; June 19, 2012, Susp.	.....do	Do.
Tompkins, Town of, Delaware County.	360214	July 3, 1975, Emerg; November 15, 1985, Reg; June 19, 2012, Susp.	.....do	Do.
Walton, Town of, Delaware County.	360215	November 10, 1975, Emerg; September 2, 1988, Reg; June 19, 2012, Susp.	.....do	Do.
Walton, Village of, Delaware County.	360216	May 19, 1975, Emerg; April 2, 1991, Reg; June 19, 2012, Susp.	.....do	Do.
Region III				
Pennsylvania:				
Adams, Township of, Cambria County.	421433	November 25, 1975, Emerg; August 15, 1990, Reg; June 19, 2012, Susp.	.....do	Do.
Allegheny, Township of, Cambria County.	422265	August 26, 1975, Emerg; March 18, 1986, Reg; June 19, 2012, Susp.	.....do	Do.
Ashville, Borough of, Cambria County.	422266	July 25, 1975, Emerg; May 1, 1985, Reg; June 19, 2012, Susp.	.....do	Do.
Barr, Township of, Cambria County.	421434	May 11, 1976, Emerg; October 15, 1985, Reg; June 19, 2012, Susp.	.....do	Do.
Blacklick, Township of, Cambria County.	421435	March 25, 1976, Emerg; October 15, 1985, Reg; June 19, 2012, Susp.	.....do	Do.
Brownstown, Borough of, Cambria County.	422654	March 29, 1978, Emerg; October 30, 1978, Reg; June 19, 2012, Susp.	.....do	Do.

State and location	Community No.	Effective date authorization/cancellation of sale of flood insurance in community	Current effective map date	Date certain federal assistance no longer available in SFHAs
Cambria, Township of, Cambria County.	421436	December 3, 1975, Emerg; September 4, 1985, Reg; June 19, 2012, Susp.	.....do	Do.
Cassandra, Borough of, Cambria County.	421426	August 7, 1975, Emerg; March 5, 1990, Reg; June 19, 2012, Susp.	.....do	Do.
Chest, Township of, Cambria County.	422604	December 15, 1980, Emerg; September 10, 1984, Reg; June 19, 2012, Susp.	.....do	Do.
Clearfield, Township of, Cambria County.	421437	July 29, 1977, Emerg; March 5, 1990, Reg; June 19, 2012, Susp.	.....do	Do.
Cresson, Township of, Cambria County.	422605	July 12, 1976, Emerg; January 17, 1986, Reg; June 19, 2012, Susp.	.....do	Do.
Croyle, Township of, Cambria County.	421439	December 22, 1975, Emerg; August 15, 1990, Reg; June 19, 2012, Susp.	.....do	Do.
Dale, Borough of, Cambria County.	421428	February 28, 1977, Emerg; August 2, 1990, Reg; June 19, 2012, Susp.	.....do	Do.
Dean, Township of, Cambria County.	421440	April 25, 1977, Emerg; June 19, 1989, Reg; June 19, 2012, Susp.	.....do	Do.
East Carroll, Township of, Cambria County.	422268	November 19, 1981, Emerg; March 5, 1990, Reg; June 19, 2012, Susp.	.....do	Do.
East Conemaugh, Borough of, Cambria County.	422259	February 25, 1977, Emerg; June 18, 1990, Reg; June 19, 2012, Susp.	.....do	Do.
East Taylor, Township of, Cambria County.	421441	February 10, 1976, Emerg; April 2, 1990, Reg; June 19, 2012, Susp.	.....do	Do.
Ebensburg, Borough of, Cambria County.	422260	September 19, 1975, Emerg; June 30, 1976, Reg; June 19, 2012, Susp.	.....do	Do.
Elder, Township of, Cambria County.	422592	February 26, 1976, Emerg; June 19, 1989, Reg; June 19, 2012, Susp.	.....do	Do.
Ferndale, Borough of, Cambria County.	421429	November 24, 1975, Emerg; November 5, 1986, Reg; June 19, 2012, Susp.	.....do	Do.
Franklin, Borough of, Cambria County.	422593	August 1, 1977, Emerg; April 2, 1990, Reg; June 19, 2012, Susp.	.....do	Do.
Gallitzin, Township of, Cambria County.	422262	August 15, 1975, Emerg; September 24, 1984, Reg; June 19, 2012, Susp.	.....do	Do.
Geistown, Borough of, Cambria County.	420229	May 19, 1976, Emerg; March 19, 1990, Reg; June 19, 2012, Susp.	.....do	Do.
Hastings, Borough of, Cambria County.	420230	August 25, 1975, Emerg; August 3, 1989, Reg; June 19, 2012, Susp.	.....do	Do.
Jackson, Township of, Cambria County.	421442	August 26, 1975, Emerg; June 30, 1976, Reg; June 19, 2012, Susp.	.....do	Do.
Johnstown, City of, Cambria County.	420231	August 4, 1972, Emerg; April 15, 1977, Reg; June 19, 2012, Susp.	.....do	Do.
Lilly, Borough of, Cambria County.	421430	February 25, 1977, Emerg; October 17, 1989, Reg; June 19, 2012, Susp.	.....do	Do.
Lorain, Borough of, Cambria County.	420232	July 29, 1977, Emerg; August 15, 1990, Reg; June 19, 2012, Susp.	.....do	Do.
Lower Yoder, Township of, Cambria County.	420233	October 6, 1972, Emerg; February 1, 1978, Reg; June 19, 2012, Susp.	.....do	Do.
Middle Taylor, Township of, Cambria County.	421443	April 25, 1977, Emerg; October 15, 1985, Reg; June 19, 2012, Susp.	.....do	Do.
Munster, Township of, Cambria County.	422263	December 3, 1982, Emerg; December 4, 1985, Reg; June 19, 2012, Susp.	.....do	Do.
Nanty Glo, Borough of, Cambria County.	422610	June 17, 1975, Emerg; September 15, 1989, Reg; June 19, 2012, Susp.	.....do	Do.
Patton, Borough of, Cambria County.	420235	July 11, 1975, Emerg; January 17, 1990, Reg; June 19, 2012, Susp.	.....do	Do.
Portage, Township of, Cambria County.	421444	March 28, 1978, Emerg; March 5, 1990, Reg; June 19, 2012, Susp.	.....do	Do.
Reade, Township of, Cambria County.	421445	July 21, 1977, Emerg; March 19, 1990, Reg; June 19, 2012, Susp.	.....do	Do.
Richland, Township of, Cambria County.	422264	May 12, 1975, Emerg; December 4, 1985, Reg; June 19, 2012, Susp.	.....do	Do.
Scalp Level, Borough of, Cambria County.	420237	April 19, 1976, Emerg; October 17, 1986, Reg; June 19, 2012, Susp.	.....do	Do.
South Fork, Borough of, Cambria County.	420238	August 15, 1975, Emerg; March 19, 1990, Reg; June 19, 2012, Susp.	.....do	Do.
Southmont, Borough of, Cambria County.	420239	May 4, 1977, Emerg; April 2, 1990, Reg; June 19, 2012, Susp.	.....do	Do.
Stonycreek, Township of, Cambria County.	420241	August 18, 1972, Emerg; February 15, 1978, Reg; June 19, 2012, Susp.	.....do	Do.

State and location	Community No.	Effective date authorization/cancellation of sale of flood insurance in community	Current effective map date	Date certain federal assistance no longer available in SFHAs
Summerhill, Borough of, Cambria County.	420242	July 9, 1975, Emerg; March 19, 1990, Reg; June 19, 2012, Susp.	.....do	Do.
Summerhill, Township of, Cambria County.	421446	December 18, 1975, Emerg; September 4, 1985, Reg; June 19, 2012, Susp.	.....do	Do.
Susquehanna, Township of, Cambria County.	421447	April 28, 1976, Emerg; November 24, 1978, Reg; June 19, 2012, Susp.	.....do	Do.
Vintondale, Borough of, Cambria County.	420243	May 28, 1975, Emerg; March 19, 1990, Reg; June 19, 2012, Susp.	.....do	Do.
Washington, Township of, Cambria County.	421448	January 27, 1977, Emerg; November 3, 1989, Reg; June 19, 2012, Susp.	.....do	Do.
West Carroll, Township of, Cambria County.	421449	June 15, 1976, Emerg; August 4, 1988, Reg; June 19, 2012, Susp.	.....do	Do.
Westmont, Borough of, Cambria County.	421139	March 29, 1974, Emerg; October 13, 1978, Reg; June 19, 2012, Susp.	.....do	Do.
White, Township of, Cambria County.	422258	May 3, 1977, Emerg; March 19, 1990, Reg; June 19, 2012, Susp.	.....do	Do.
Wilmore, Borough of, Cambria County.	420244	January 28, 1976, Emerg; December 5, 1990, Reg; June 19, 2012, Susp.	.....do	Do.
West Virginia:				
Barrackville, Town of, Marion County.	540098	June 26 ,1975, Emerg; March 16, 1988, Reg; June 19, 2012, Susp.	.....do	Do.
Fairmont, City of, Marion County.	540099	February 14, 1977, Emerg; July 2, 1987, Reg; June 19, 2012, Susp.	.....do	Do.
Fairview, Town of, Marion County.	540100	March 24, 1975, Emerg; March 16, 1988, Reg; June 19, 2012, Susp.	.....do	Do.
Farmington, Town of, Marion County.	540101	March 24, 1975, Emerg; March 16, 1988, Reg; June 19, 2012, Susp.	.....do	Do.
Grant Town, Town of, Marion County.	540102	April 7, 1975, Emerg; March 4, 1988, Reg; June 19, 2012, Susp.	.....do	Do.
Marion County, Unincorporated Areas.	540097	August 21, 1975, Emerg; July 4, 1988, Reg; June 19, 2012, Susp.	.....do	Do.
Monongah, Town of, Marion County.	540104	April 21, 1975, Emerg; March 16, 1988, Reg; June 19, 2012, Susp.	.....do	Do.
Pleasant Valley, City of, Marion County.	540292	N/A, Emerg; March 29, 2004, Reg; June 19, 2012, Susp.	.....do	Do.
Rivesville, Town of, Marion County.	540105	April 18, 1975, Emerg; March 16, 1988, Reg; June 19, 2012, Susp.	.....do	Do.
Worthington, Town of, Marion County.	540106	May 13, 1975, Emerg; March 16, 1988, Reg; June 19, 2012, Susp.	.....do	Do.
Region IV				
Alabama:				
Ashville, Town of, Saint Clair County.	010186	June 5, 1975, Emerg; April 17, 1987, Reg; June 19, 2012, Susp.	.....do	Do.
Moody, Town of, Saint Clair County.	010187	May 21, 1975, Emerg; July 4, 1989, Reg; June 19, 2012, Susp.	.....do	Do.
Odenville, Town of, Saint Clair County.	010188	July 11, 1975, Emerg; August 5, 1986, Reg; June 19, 2012, Susp.	.....do	Do.
Pell City, City of, Saint Clair County.	010189	May 5, 1975, Emerg; July 4, 1989, Reg; June 19, 2012, Susp.	.....do	Do.
Ragland, Town of, Saint Clair County.	010190	June 26, 1975, Emerg; June 3, 1986, Reg; June 19, 2012, Susp.	.....do	Do.
Riverside, Town of, Saint Clair County.	010288	June 6, 1977, Emerg; August 19, 1986, Reg; June 19, 2012, Susp.	.....do	Do.
Saint Clair County, Unincorporated Areas.	010290	February 9, 1979, Emerg; September 29, 1989, Reg; June 19, 2012, Susp.	.....do	Do.
Springville, Town of, Saint Clair County.	010289	April 16, 1975, Emerg; August 19, 1986, Reg; June 19, 2012, Susp.	.....do	Do.
Steele, Town of, Saint Clair County.	010291	August 25, 1977, Emerg; September 18, 1985, Reg; June 19, 2012, Susp.	.....do	Do.
Trussville, City of, Jefferson and Saint Clair Counties.	010133	June 26, 1975, Emerg; November 18, 1981, Reg; June 19, 2012, Susp.	.....do	Do.
South Carolina:				
Aiken, City of, Aiken County	450003	December 17, 1973, Emerg; April 16, 1979, Reg; June 19, 2012, Susp.	.....do	Do.
Aiken County, Unincorporated Areas.	450002	July 31, 1975, Emerg; March 4, 1980, Reg; June 19, 2012, Susp.	.....do	Do.
Burnettown, Town of, Aiken County.	450004	March 19, 1976, Emerg; February 4, 1987, Reg; June 19, 2012, Susp.	.....do	Do.

State and location	Community No.	Effective date authorization/cancellation of sale of flood insurance in community	Current effective map date	Date certain federal assistance no longer available in SFHAs
Jackson, City of, Aiken County	450005	April 12, 1976, Emerg; May 15, 1986, Reg; June 19, 2012, Susp.	.....do	Do.
New Ellenton, City of, Aiken County.	450006	May 9, 1975, Emerg; June 30, 1976, Reg; June 19, 2012, Susp.	.....do	Do.
North Augusta, City of, Aiken County.	450007	March 12, 1975, Emerg; February 1, 1980, Reg; June 19, 2012, Susp.	.....do	Do.
Region V				
Wisconsin:				
Kenosha, City of, Kenosha County.	550209	April 14, 1975, Emerg; September 2, 1982, Reg; June 19, 2012, Susp.	.....do	Do.
Kenosha County, Unincorporated Areas.	550523	December 12, 1973, Emerg; February 17, 1982, Reg; June 19, 2012, Susp.	.....do	Do.
Pleasant Prairie, Village of, Kenosha County.	550613	N/A, Emerg; April 3, 1998, Reg; June 19, 2012, Susp.	.....do	Do.
Silver Lake, Village of, Kenosha County.	550210	March 20, 1974, Emerg; September 1, 1978, Reg; June 19, 2012, Susp.	.....do	Do.
Twin Lakes, Village of, Kenosha County.	550211	June 24, 1975, Emerg; June 1, 1982, Reg; June 19, 2012, Susp.	.....do	Do.
Region VI				
Arkansas:				
Alexander, Town of, Pulaski and Saline Counties.	050377	September 26, 1980, Emerg; January 20, 1982, Reg; June 19, 2012, Susp.	.....do	Do.
Arkansas City, City of, Desha County.	050066	April 22, 1975, Emerg; October 5, 1982, Reg; June 19, 2012, Susp.	.....do	Do.
Benton, City of, Saline County	050192	July 2, 1975, Emerg; December 15, 1981, Reg; June 19, 2012, Susp.	.....do	Do.
Bryant, City of, Saline County	050308	June 20, 1975, Emerg; June 28, 1977, Reg; June 19, 2012, Susp.	.....do	Do.
Desha County, Unincorporated Areas.	050065	August 3, 1978, Emerg; November 15, 1985, Reg; June 19, 2012, Susp.	.....do	Do.
Dumas, City of, Desha County	050067	September 20, 1974, Emerg; November 19, 1980, Reg; June 19, 2012, Susp.	.....do	Do.
Haskell, City of, Saline County	050416	September 22, 1975, Emerg; August 19, 1987, Reg; June 19, 2012, Susp.	.....do	Do.
McGehee, City of, Desha County.	050068	January 23, 1975, Emerg; November 19, 1980, Reg; June 19, 2012, Susp.	.....do	Do.
Reed, Town of, Desha County	050070	July 3, 1975, Emerg; November 23, 1982, Reg; June 19, 2012, Susp.	.....do	Do.
Traskwood, City of, Saline County.	050294	July 25, 1975, Emerg; October 12, 1982, Reg; June 19, 2012, Susp.	.....do	Do.
Watson, City of, Desha County	050072	June 13, 1975, Emerg; October 19, 1982, Reg; June 19, 2012, Susp.	.....do	Do.
Louisiana:				
Central, City of, East Baton Rouge Parish.	220060	N/A, Emerg; April 6, 2007, Reg; June 19, 2012, Susp.	.....do	Do.
Delta, Village of, Madison Parish.	220123	May 21, 1973, Emerg; September 25, 1979, Reg; June 19, 2012, Susp.	.....do	Do.
East Baton Rouge Parish, Unincorporated Areas.	220058	June 12, 1970, Emerg; July 2, 1979, Reg; June 19, 2012, Susp.	.....do	Do.
Madison Parish, Unincorporated Areas.	220122	May 10, 1973, Emerg; March 4, 1988, Reg; June 19, 2012, Susp.	.....do	Do.
Mound, Village of, Madison Parish.	220124	May 21, 1973, Emerg; July 12, 1977, Reg; June 19, 2012, Susp.	.....do	Do.
Richmond, Village of, Madison Parish.	220125	September 3, 1974, Emerg; July 16, 1980, Reg; June 19, 2012, Susp.	.....do	Do.
Zachary, City of, East Baton Rouge Parish.	220061	July 2, 1973, Emerg; September 15, 1977, Reg; June 19, 2012, Susp.	.....do	Do.
Oklahoma:				
Covington, Town of, Garfield County.	400362	June 30, 1975, Emerg; May 1, 1985, Reg; June 19, 2012, Susp.	.....do	Do.
Enid, City of, Garfield County ..	400062	November 2, 1973, Emerg; March 15, 1979, Reg; June 19, 2012, Susp.	.....do	Do.
Garber, City of, Garfield County.	400380	June 25, 1976, Emerg; August 5, 1985, Reg; June 19, 2012, Susp.	.....do	Do.
Garfield County, Unincorporated Areas.	400473	June 24, 1986, Emerg; September 27, 1991, Reg; June 19, 2012, Susp.	.....do	Do.
Kremlin, City of, Garfield County.	400293	October 27, 1976, Emerg; May 25, 1978, Reg; June 19, 2012, Susp.	.....do	Do.

State and location	Community No.	Effective date authorization/cancellation of sale of flood insurance in community	Current effective map date	Date certain federal assistance no longer available in SFHAs
Lahoma, Town of, Garfield County.	400294	N/A, Emerg; August 27, 1993, Reg; June 19, 2012, Susp.	.....do	Do.
North Enid, Town of, Garfield County.	400425	June 18, 1975, Emerg; April 1, 1981, Reg; June 19, 2012, Susp.	.....do	Do.
Texas:				
Caldwell County, Unincorporated Areas.	480094	May 15, 1975, Emerg; March 15, 1982, Reg; June 19, 2012, Susp.	.....do	Do.
Luling, City of, Caldwell County	480096	May 5, 1975, Emerg; January 16, 1979, Reg; June 19, 2012, Susp.	.....do	Do.
Martindale, City of, Caldwell County.	481587	November 16, 1983, Emerg; March 15, 1982, Reg; June 19, 2012, Susp.	.....do	Do.
San Marcos, City of, Caldwell County.	485505	October 9, 1970, Emerg; August 27, 1971, Reg; June 19, 2012, Susp.	.....do	Do.
Tom Green County, Unincorporated Areas.	480622	June 19, 1978, Emerg; August 3, 1992, Reg; June 19, 2012, Susp.	.....do	Do.
Uhland, City of, Caldwell County.	481668	N/A, Emerg; December 4, 2009, Reg; June 19, 2012, Susp.	.....do	Do.
Region VII				
Iowa:				
Eldora, City of, Hardin County	190139	April 14, 1975, Emerg; May 1, 1987, Reg; June 19, 2012, Susp.	.....do	Do.
Union, City of, Hardin County ..	190142	December 15, 1975, Emerg; June 1, 1987, Reg; June 19, 2012, Susp.	.....do	Do.
Missouri:				
Hardin, City of, Ray County	290307	November 10, 1975, Emerg; January 6, 1983, Reg; June 19, 2012, Susp.	.....do	Do.
Henrietta, City of, Ray County	290308	April 8, 1977, Emerg; August 16, 1982, Reg; June 19, 2012, Susp.	.....do	Do.
Orrick, City of, Ray County	290309	July 18, 1974, Emerg; January 19, 1983, Reg; June 19, 2012, Susp.	.....do	Do.
Ray County, Unincorporated Areas.	290778	March 26, 1975, Emerg; January 19, 1983, Reg; June 19, 2012, Susp.	.....do	Do.
Richmond, City of, Ray County	290657	February 17, 1995, Emerg; May 1, 1999, Reg; June 19, 2012, Susp.	.....do	Do.

*-do- = Ditto.
Code for reading third column: Emerg.—Emergency; Reg.—Regular; Susp—Suspension.

Dated: June 12, 2012.

David L. Miller,

Associate Administrator, Federal Insurance and Mitigation Administration, Department of Homeland Security, Federal Emergency Management Agency.

[FR Doc. 2012–14717 Filed 6–15–12; 8:45 am]

BILLING CODE 9110–12–P

FEDERAL COMMUNICATIONS COMMISSION

47 CFR Parts 1, 17, 22, 24, 25, 27, 80, 87, and 90

[WT Docket Nos. 08–61 and 03–187; FCC 11–181]

National Environmental Policy Act Compliance for Proposed Tower Registrations; Effects of Communications Towers on Migratory Birds

AGENCY: Federal Communications Commission.

ACTION: Final rule; announcement of effective date.

SUMMARY: In this document, the Commission announces that the Office of Management and Budget (OMB) has approved, for a period of three years, the information collections associated with the Commission's *Migratory Bird Order on Remand* (*Order*). This document is consistent with the *Order,* which stated that the rules will become effective upon Commission publication of a document in the **Federal Register** announcing their approval by OMB.

DATES: The rules amending 47 CFR Parts 1, 17, 22, 24, 25, 27, 80, 87, and 90 published at 77 FR 3935, January 26, 2012, are effective June 18, 2012.

FOR FURTHER INFORMATION CONTACT: Judith B. Herman, Federal Communications Commission, at (202) 418–0214 or via the Internet at *Judith-B.Herman@fcc.gov.*

SUPPLEMENTARY INFORMATION: This document announces that, on April 27, 2011, OMB approved, for a period of three years, the revised information collections associated with the Commission's *Order,* FCC 11–181, published at 77 FR 3935, January 26, 2012. The OMB Control Numbers are 3060–0139 and 3060–0798. The Commission publishes this document as an announcement of the effective date of the rules.

Synopsis

As required by the Paperwork Reduction Act of 1995 (44 U.S.C. 3507), the FCC is notifying the public that it received OMB approval on April 27, 2012, for the revised information collections required by modifications to the Commission's rules in 47 CFR Parts 1, 17, 22, 24, 25, 27, 80, 87, and 90.

Under 5 CFR 1320, an agency may not conduct or sponsor a collection of information unless it displays a current, valid OMB Control Number. No person shall be subject to any penalty for failing to comply with a collection of information subject to the Paperwork Reduction Act that does not display a

current, valid OMB Control Number. The OMB Control Numbers for the revised collections are 3060–0139 and 3060–0798. The foregoing notice is required by the Paperwork Reduction Act of 1995, Public Law 104–13, October 1, 1995, and 44 U.S.C. 3507.

The total annual reporting burdens and costs for the respondents are as follows:

OMB Control Number: 3060–0139.

OMB Approval Date: April 27, 2012.

OMB Expiration Date: April 30, 2015.

Title: Application for Antenna Structure Registration, FCC Form 854.

Form Number: FCC Form 854.

Respondents: Individuals or households; Business or other for-profit; Not-for-profit institutions; and State, Local, or Tribal Government.

Number of Respondents and Responses: 2,500 respondents; 47,500 responses.

Estimated Time per Response: .5 hour.

Frequency of Response: On occasion reporting requirement, recordkeeping requirement.

Obligation to Respond: Required to obtain or retain benefits.

Total Annual Burden: 21,345.

Total Annual Cost: $975,725.

Nature and Extent of Confidentiality: Respondents may request materials or information submitted to the Commission be withheld from public inspection under 47 CFR 0.459 of the Commission's rules.

Needs and Uses: The purpose of FCC Form 854 is to register antenna structures (radio towers) that are used for wire or radio communication services which are regulated by the Commission; to make changes to existing registered antenna structures or pending applications for registration; and to notify the Commission of the completion of construction or dismantlement of such structures, as required by Title 47 of the Code of Federal Regulations, Chapter 1, Part 17. The Commission has revised Form 854 in accordance with the rule changes in the *Migratory Bird Order on Remand,* WTB Dockets 08–61 and 03–187, by adding questions that will facilitate the pre-application notification process. In addition, Form 854 is being revised to include several administrative questions that will enable the Commission to more efficiently process antenna structure registrations. The additional questions relate to replacement towers; requirements to post local and national notice so that the public may have a meaningful opportunity to comment on the environmental effects of a proposed structure that requires registration; determining if the structure is located on federal land; allowing the applicant to select the type of painting and/or lighting it will utilize on the structure being registered; and collecting additional administrative information such as the type of entity that owns the structure, Fax number, and county and zip code in which the structure is to be located.

OMB Control Number: 3060–0798.

OMB Approval Date: April 27, 2012.

OMB Expiration Date: April 30, 2015.

Title: FCC Application for Radio Service Authorization: WTB and PSHSB.

Form Number: FCC Form 601.

Respondents: Individuals or households; Business or other for-profit; Not-for-profit institutions; and State, Local, or Tribal Government.

Number of Responses: 253,120.

Estimated Time per Response: 1.25 hour.

Frequency of Response: On occasion reporting requirement, third party disclosure requirement, Record Keeping & Other—10 year.

Obligation to Respond: Required to obtain or retain benefits.

Total Annual Burden: 221,780.

Total Annual Cost: $55,410,000.

Nature and Extent of Confidentiality: In general there is no need for confidentiality. On a case by case basis, the Commission may be required to withhold from disclosure certain information about the location, character, or ownership of a historic property, including traditional religious sites.

Needs and Uses: FCC Form 601 is a consolidated, multi-part application form, or ''long form,'' that is used for general market-based licensing and site-by-site licensing for wireless telecommunications and public safety services filed through the Commission's Universal Licensing System (ULS). FCC Form 601 is composed of a main form that contains the administrative information and a series of schedules used for filing technical and other information. The Commission has revised FCC Form 601, Schedules D, I and M, to allow respondents the option to provide a File Number for a pending Antenna Structure Registration (ASR) application. Previously ULS would only accept a granted ASR registration number. This change has been made to allow applicants to file an FCC Form 601 application while the ASR application is going through the new environmental notice process as required by the *Migratory Bird Order on Remand,* WTB Dockets 08–61 and 03–187. The entries for structure type are changing as a result of the Order as well. There is no change to the number of respondents, burden or cost.

Federal Communications Commission.

Marlene H. Dortch,

Secretary.

[FR Doc. 2012–13610 Filed 6–15–12; 8:45 am]

BILLING CODE 6712–01–P

FEDERAL COMMUNICATIONS COMMISSION

47 CFR Part 76

[CS Docket No. 98–120; FCC 12–59]

Carriage of Digital Television Broadcast Signals: Amendment to the Commission's Rules

AGENCY: Federal Communications Commission.

ACTION: Final rule.

SUMMARY: In this document, the Commission finds it in the public interest to allow the viewability rule to sunset as scheduled. The Commission reinterprets the statutory viewability requirement to permit cable operators to require the use of set-top equipment to view must-carry signals, provided that such equipment is both available and affordable (or provided at no cost). The Commission establishes a transitional period of six months after expiration of the current rule during which hybrid systems will be required to continue to carry the signals of must-carry stations in analog format to all analog cable subscribers. The Commission also concludes that the small-system HD carriage exemption continues to serve the public interest and extends the existing exemption for three more years.

DATES: Effective June 18, 2012.

FOR FURTHER INFORMATION CONTACT: For additional information on this proceeding, contact Steven Broeckaert, *Steven.Broeckaert@fcc.gov,* or Evan Baranoff, *Evan.Baranoff@fcc.gov,* of the Media Bureau, Policy Division, (202) 418–2120.

SUPPLEMENTARY INFORMATION: This is a summary of the Commission's *Fifth Report and Order,* FCC 12–59, adopted on June 11, 2012, and released on June 12, 2012. The full text of this document is available electronically via ECFS at *http://fjallfoss.fcc.gov/ecfs/or* may be downloaded at *http://transition.fcc.gov/Daily_Releases/Daily_Business/2012/db0612/FCC-12-59A1.doc.* (Documents will be available electronically in ASCII, Word 97, and/or Adobe Acrobat.) The full text of this document is also available for public inspection and copying during regular business hours in the FCC Reference Center, Federal

Communications Commission, 445 12th Street SW., CY–A257, Washington, DC 20554. The complete text may be purchased from the Commission's copy contractor, 445 12th Street SW., Room CY–B402, Washington, DC 20554. Alternative formats are available for people with disabilities (Braille, large print, electronic files, audio format), by sending an email to *fcc504@fcc.gov* or calling the Commission's Consumer and Governmental Affairs Bureau at (202) 418–0530 (voice), (202) 418–0432 (TTY).

I. Introduction

1. With this Fifth Report and Order (Fifth R&O) in the DTV cable carriage docket, we announce the sunset of the Commission's current ''viewability'' rule, which mandates that cable operators with hybrid systems [1] carry digital must-carry signals [2] in an analog format for the benefit of analog-service customers. As explained below, we believe the statutory viewability requirement is best read to give the operator of a hybrid system greater flexibility in deciding how to comply with the viewability mandate. In particular, while such an operator may continue to carry a must-carry signal in a format that is capable of being viewed by analog-service customers without the use of additional equipment, rapid changes in the marketplace and technology—in particular the widespread availability of small digital set-top boxes that cable operators are making available at low cost (or no cost) to analog customers of hybrid systems—provide alternative means by which must-carry television signals can be made viewable to all analog customers who are served by hybrid systems, as required by statute. Because a cable operator's exercise of this additional flexibility would involve operational changes that affect must-carry broadcast stations and viewers, we establish a six-month transitional period, until December 12, 2012, during which hybrid systems will continue to carry the signals of must-carry stations in analog format to all analog cable subscribers. In addition, we find it is in the public interest to extend for three more years the HD carriage exemption for eligible small cable system operators.

II. Viewability Requirement

A. Background

2. Pursuant to section 614(b)(4)(B) of the Communications Act of 1934, as amended (the ''Act''),[3] the Commission initiated this proceeding in 1998 to address the responsibilities of cable television operators with respect to carriage of digital broadcast stations in light of the nation's transition to digital television.[4] After Congress selected a date certain for the digital transition of full-power broadcast television stations, the Commission, in 2007, adopted the *Viewability Order* which, among other things, established a rule to ensure that after the DTV transition, cable subscribers would continue to be able to view broadcast stations, as required by statute.[5] The Commission was concerned that there would ''continue to be a large number of cable subscribers with legacy, analog-only television sets after the end of the DTV transition.'' [6] In 2007, the Commission estimated that about 35 percent of all television homes, or approximately 40 million households, were analog-only cable subscribers.[7] Although all cable systems were expected to eventually transition to all-digital systems, the Commission recognized that there may be two different types of cable systems in operation for some period of time after completion of the DTV transition.[8] Some operators may choose to deliver programming in both digital and analog format (''hybrid systems''), *i.e.,* in addition to a digital tier, the operator would offer an analog tier and continue to provide local television signals and, in some cases, a subset of cable channels, to analog receivers in a format that does not require additional equipment.[9] Other operators may choose to operate or transition to all-digital systems, providing cable service in only digital format.[10] Thus, in anticipation of the approaching end of the digital television transition and in light of the state of technology and the marketplace, the Commission adopted a rule providing cable operators of hybrid systems two options to comply with the statutory viewability requirement for must-carry broadcast television stations: (1) Carry the digital signal in analog format to all analog cable subscribers in addition to any digital version carried, or (2) transition to an all-digital system and carry the signal only in digital format, provided that all subscribers have the necessary equipment to view the broadcast content.[11]

3. The Commission did not make the viewability rule permanent. Instead, the Commission decided to have the rule remain in force for three years after the date of the digital transition, subject to review by the Commission during the last year of the three-year period.[12] With respect to the viewability rule, the Commission stated that ''[i]n light of the numerous issues associated with the transition, it is important to retain flexibility as we deal with emerging concerns.'' [13] The Commission explained that a three-year sunset ''provides the Commission with the opportunity after the transition to review these rules in light of the potential cost and service disruption to consumers, and the state of technology and the marketplace.'' [14] The Commission identified certain factors it believed would be relevant to its later review, including digital cable penetration, cable deployment of digital set-top boxes with various levels of processing capabilities, and cable system capacity constraints.[15]

4. The full-power digital television transition was successfully completed on June 12, 2009, after Congress chose to delay it from the originally scheduled conclusion on February 17, 2009. Accordingly, under the terms of the 2007 *Viewability Order,* absent Commission action, the viewability rule is scheduled to sunset on June 12, 2012.[16]

5. On February 10, 2012, we initiated the Fourth Further Notice of Proposed Rulemaking (''*Fourth FNPRM*'') in this docket to determine whether it would be in the public interest to retain the viewability rule, given the current state

[1] A hybrid system is a cable system that offers both analog and digital cable service to its subscribers. By contrast, an analog-only system or all-digital system provides only analog or digital service, respectively.

[2] The ''must-carry'' provisions of the Communications Act entitle local television stations to have qualifying signals carried on cable systems in the same markets. Section 614(a) of the Communications Act provides that ''[e]ach cable operator shall carry, on the cable system of that operator, the signals of local commercial television stations and qualified low power stations as provided in this section.'' 47 U.S.C. 534(a). Section 615(a), 47 U.S.C. 535(a), imposes a similar requirement to carry ''the signals'' of qualifying non-commercial television stations.

[3] 47 U.S.C. 534(b)(4)(B).

[4] Notice of Proposed Rulemaking, FCC 98–153, 63 FR 42330, at paras. 1–2, August 7, 1998. *See also* 47 U.S.C. 534(b)(4)(B) (directing the Commission to ''initiate a proceeding to establish any changes in signal carriage requirements of cable television systems necessary to ensure cable carriage of such broadcast signals of local commercial television stations which have been changed to conform with such modified standards'').

[5] *See generally Viewability Order,* FCC 07–170, 73 FR 6043, February 1, 2008; *Third FNPRM,* FCC 07–170, 73 FR 6099, February 1, 2008.

[6] *Id.* at para. 1.

[7] *Id.* at n. 3.

[8] *Id.* at para. 20.

[9] *Id.*

[10] *Id.*

[11] 47 CFR 76.56(d)(3).

[12] Viewability Order, at para. 16.

[13] *Id.*

[14] *Id.*

[15] *Id.* at n. 39.

[16] *Id.* at para. 16.

of technology and the marketplace.[17] We received four comments, five reply comments, and numerous *ex parte* submissions in response to our *Fourth FNPRM.*[18] In their comments, broadcasters support retention of the viewability rule, while cable operators urge us to let it expire.[19]

B. Discussion

6. Based on significant changes in the marketplace and technology that have occurred over the past five years, and our current understanding of the statutory viewability requirement as explained herein, we find it in the public interest to allow the viewability rule to sunset as scheduled, on June 12, 2012. Because we anticipate that our revised interpretation of the statutory viewability requirement will lead to the widespread deployment of small, affordable set-top boxes, we establish a transitional period of six months after expiration of the current rule—that is, until December 12, 2012—during which hybrid systems will continue to carry the signals of must-carry stations in analog format to all analog cable subscribers. This transitional period will give consumers, cable operators, and broadcasters that rely on must-carry access an opportunity to prepare for that deployment and to take other necessary steps resulting from changes in cable carriage.

1. Statutory Analysis

7. Section 614(b)(7) of the Communications Act, which covers commercial stations, states that broadcast signals that are subject to mandatory carriage ''shall be viewable via cable on all television receivers of a subscriber which are connected to a cable system by a cable operator or for which a cable operator provides a connection.'' [20] Similarly, section 615(h) for noncommercial stations states that ''[s]signals carried in fulfillment of the carriage obligations of a cable operator under this section shall be available to every subscriber as part of the cable system's lowest priced tier that includes the retransmission of local commercial television broadcast signals.'' [21] In the 2007 *Viewability Order,* the Commission found that these statutory requirements ''plainly apply'' to cable carriage of digital broadcast signals, and, ''as a consequence, cable operators must ensure that all cable subscribers—including those with analog television sets—continue to be able to view all commercial and non-commercial must-carry broadcast stations'' after the DTV transition.[22] The Commission interpreted the viewability mandate to require that a cable operator ''ensure that the broadcast signals in question are actually viewable on their subscribers' receivers.'' [23] The Commission rejected cable commenters' argument that the viewability mandate is satisfied when a cable operator transmits broadcast signals and offers to sell or lease a set-top box to their customers that will allow those signals to be viewed on their receivers.[24] The Commission found that argument ''at odds with both the plain meaning of the statutory text as well as the structure of the provision,'' explaining that ''[t]o the extent that such subscribers do not have the necessary equipment, * * * the broadcast signals in question are not 'viewable' on their receivers.'' [25] To implement the viewability mandate, the Commission concluded that cable operators that choose to operate a hybrid system—*i.e.,* operators that offer both analog and digital service tiers—were required to carry the must-carry stations' signals in analog format to their analog cable subscribers, while also ensuring the signals were viewable to digital subscribers.[26]

8. After consideration of the statutory arguments raised by the parties to this proceeding, and upon further review of the statute, we find that the language of the Act is less definitive than our earlier decision suggested. Nothing in the language of the statute plainly prohibits cable operators from offering equipment to satisfy the viewability requirement, *i.e.,* the statutory sections at issue do not state that a signal is not ''viewable'' if the consumer needs to use additional equipment. (We disagree with NAB's contention that the *Fourth FNPRM* did not ask for comment on the Commission's prior statutory analysis of the viewability requirement in section 614(b)(7) and that cable commenters, having failed to seek timely review or reconsideration of the 2007 *Viewability Order,* are barred from reopening the issue now.[27] To the contrary, the *Fourth FNPRM* specifically asked for parties to include a statutory analysis with any proposals for changing the viewability rule.[28] As requested in the *Fourth FNPRM,* cable operators provided a statutory analysis to support their alternative proposal for satisfying the viewability requirement.[29])

[17] *Fourth FNPRM,* FCC 12–18, 77 FR 9187, February 16, 2012.

[18] All of the filings made in this docket are available to the public both online via the Commission's Electronic Comment Filing System (''ECFS'') at *http://www.fcc.gov/cgb/ecfs/* and during regular business hours in the FCC Reference Center, Federal Communications Commission, 445 12th Street SW., CY–A257, Washington, DC 20554.

[19] *See, e.g.,* NAB comments at 3; NCTA comments at 5; TWC comments at 25.

[20] 47 U.S.C. 534(b)(7).

[21] 47 U.S.C. 535(h). As the Commission observed in the 2007 *Viewability Order,* although Sections 614(b)(7) and 615(h) use different language—(*i.e.,* 614(b)(7) directs that signals shall be ''viewable'' whereas 615(h) directs that signals shall be ''available'')—the Commission consistently has treated them as imposing identical obligations. *Viewability Order,* at note 36. *See also Analog Must Carry Order,* FCC 93–144, 58 FR 17350, at para. 32, April 2, 1993 (noting that all must-carry signals must be available to all subscribers); *see also 1996 OVS Order, FCC 96–249, 61 FR 28698, at* para. 162, *June 5, 1996* (''Pursuant to section 614(b)(7) and 615(h), the operator of a cable system is required to ensure that signals carried in fulfillment of the must-carry requirements are provided to every subscriber of the system''). *Cf. U.S.* v. *Taylor,* 640 F.3d 255, 258 (7th Cir. 2011) (''It would be unrealistic to suppose that Congress never uses synonyms—that every word or phrase in a statute has a unique meaning, shared by no other word or phrase elsewhere in the vast federal code''). We note that no commenter has suggested that we impose different carriage obligations for commercial stations and noncommercial stations. *But see* Bright House Reply at 9–10, n. 12 (arguing the Commission erred in adopting an expansive reading of section 614(b)(7) and applying that reading to noncommercial stations governed by section 615(h)). For purposes of this proceeding, we will continue to treat 614(b)(7) and 615(h) as imposing identical obligations.

[22] Viewability Order, at para. 15.

[23] *Id.* at para. 22.

[24] *Id.* at para. 22.

[25] *Id.*

[26] *Id.* at para. 15. *See also* 47 CFR 76.56(d)(3).

[27] *See* NAB Reply Comments at 2–3.

[28] *See Fourth FNPRM,* at para. 16 (''To the extent any parties find the current rule burdensome, we seek comment on proposals that will satisfy the statute in a less burdensome manner. Is any rule necessary to effectuate the statutory intent? If so, any proposals for an alternative rule to ensure the actual viewability of must-carry signals should include specific proposed wording, as well as an analysis of how the proposal is consistent with the statute'').

[29] *See, e.g.,* TWC Comments at 3–7. We also reject ION's claim that the *Fourth FNPRM* did not provide interested parties with an opportunity to comment on the DTA proposal nor ''consider[] alternative proposals that would result in eliminating the rule.'' ION Media Networks and Liberman Broadcasting *Ex Parte* (dated Jun. 1, 2012) at 6–7. To the contrary, the *Fourth FNPRM* specifically sought comment on possible alternatives to the viewability rule. *See Fourth FNPRM,* at ¶ 16 (''we seek comment on any other proposals that would achieve the results necessary to assure the viewability of must carry signals through an approach different than that of our existing rule. To the extent any parties find the current rule burdensome, we seek comment on proposals that will satisfy the statute in a less burdensome manner.'') In response, cable commenters generally argued that offering to sell or lease equipment to consumers would satisfy the statute, and specifically argued that the availability of DTAs that provided analog customers access to digital must-carry signals made our rule obsolete. NCTA Comments at 12 (''DTAs could be used to receive digital must-carry signals''). Indeed, the cable industry has argued the former point since 2007, so there is nothing new about an approach to satisfy the viewability requirement by offering to sell or lease equipment to cable customers. Thus, the public had ample notice and opportunity to respond during the comment cycle and to file *ex parte* responses to any alternative proposals

Accordingly, we do not believe that section 614(b)(7) unambiguously requires that cable subscribers must be capable of viewing must-carry signals without the use of additional equipment. We instead conclude that ''viewable'' can reasonably be read to mean that the operator must make the broadcast signal available or accessible to its subscribers by an effective means, which may include offering the necessary equipment for sale or lease, either for free or at an affordable cost that does not substantially deter use of the equipment.[30] We believe this interpretation is reasonable in light of marketplace changes that have occurred over the past five years. This reading ensures access to must-carry stations as a practical matter—rather than just a theoretical option if the customer is willing to incur significant additional expense.[31] It is consistent with both the ordinary meaning of the word ''viewable''—defined as ''capable of being seen or inspected'' [32]—and also prior interpretations of the Communications Act.[33] Accordingly, we disagree with broadcasters' sweeping arguments that requiring any sort of equipment use at all by subscribers would be ''contrary to the statute'' and ''flatly inconsistent'' with section 614(b)(7).[34] Indeed, even NAB suggested that a cable operator could satisfy the statutory viewability requirement by providing ''free equipment to subscribers that enables access to digital broadcast signals for a period of three years,'' which acknowledges that the statute is not as inflexible as NAB otherwise argued.[35] We thus agree with cable commenters that the term ''viewable'' does not unambiguously *require* that must-carry stations must be capable of being seen without the use of additional equipment.[36] In reaching this conclusion, we note that agencies may change their interpretation of an ambiguous statutory provision and that such a revised interpretation is entitled to deference.[37]

9. Broadcasters argue that allowing cable operators to satisfy the viewability requirement by requiring subscribers to purchase or lease equipment would ''make the second sentence [in] section 614(b)(7) surplusage, and remove any meaning from the word 'additional' in the third sentence of section 614(b)(7).'' [38] We disagree. The first sentence of section 614(b)(7) requires that each must carry signal ''shall be provided to every subscriber to a cable system.'' [39] As the Commission has explained, this provision requires that every class of subscriber must receive all must carry signals.[40] Cable operators have complied with this requirement through the use of a basic service tier,[41] *i.e.,* a level of service to which subscription is required in order to be eligible for access to any other tier of service at additional charge.[42] The second sentence of section 614(b)(7) is concerned with a subscriber's ability actually to ''view'' the must carry signals that have to be provided under the first sentence. The second and third sentences of section 614(b)(7) likewise are distinct mandates, as we observed in the 2007 *Viewability Order.*[43] The second sentence covers ''all television receivers of a subscriber which are connected to a cable system by a cable operator or for which a cable operator provides a connection,'' whereas the third sentence covers the situation where a ''cable operator authorizes subscribers to install additional receiver connections, but does not provide the subscriber with such connections, or with the equipment and materials for such connections.'' [44] Because of this difference, allowing cable operators to satisfy the viewability obligation of the second sentence either without the use of additional equipment or by making equipment available at no cost or an

suggested by commenters, as ION itself has done in this proceeding.

[30] *See, e.g.,* TWC Comments at 4 (''A station plainly is capable of being viewed if it can be seen with the purchase or lease of equipment (such as a set-top box or digital terminal adapter)'').

[31] In 2001, we determined that section 614(b)(7) did not require cable operators to sell or lease set top boxes to subscribers that could not view digital broadcast signals on their analog television sets. *See* First Report and Order, FCC 01–22, 66 FR 16533, at paras. 77–79, March 26, 2001; Further Notice of Proposed Rulemaking, FCC 01–22, 66 FR 16524, March 26, 2001. In 2001, the Commission's simulcast requirements were about to commence (requiring television broadcast licensees to simulcast a certain percentage of their analog channel's programming on their DTV channel), and the Commission decided that subscribers should not be forced to pay ''substantial additional costs'' for equipment that would serve only to convert to analog format digital programming that could be identical in content to the analog programming subscribers already could access directly through their analog televisions. *Id.* In that context, the Commission sought to avoid forcing upon customers ''substantial additional costs'' associated with receiving duplicative programming. Although made in a very different context, our decision today once again ensures that compliance with the viewability mandate does not impose ''substantial additional costs'' on consumers.

[32] *See* Webster's Third New International Dictionary 2551 (1993); *see also* TWC Comments at 4 (seeking this definition for ''viewable'').

[33] *See, e.g.,* Memorandum Opinion and Order, FCC 94–251, 59 FR 62330, at para. 16, December 5, 1994 (''Where a cable operator chooses to provide subscribers with signals of must-carry stations through the use of converter boxes supplied by the cable operator, the converter boxes must be capable of passing through all of the signals entitled to carriage on the basic service tier of the cable system, not just some of them. In addition, any converter boxes provided for this purpose must be provided *at rates* in accordance with section 623(b)(3). Therefore, in a situation where the subscriber's converter is supplied by the cable operator, and is incapable of receiving all signals as required by section 614(b)(7), the cable operator must make provision for a converter which is capable of providing these signals.'' (emphasis added)).

[34] *See* NAB *Ex Parte* (dated April 13, 2012) at 1. *See also* ION Media Networks Ex Parte (dated Apr. 27, 2012) at 1; Affiliates Associations *Ex Parte* (dated May 9, 2012) at 1; FOX Affiliates Association *Ex Parte* (dated May 14, 2012) at 1 (arguing that ''the viewability rule is dictated by the plain meaning of [section 614(b)(7)]'').

[35] *See* NAB *Ex Parte* (dated May 23, 2012) at 2–3; *see also* Consumers Union Ex Parte (dated June 5, 2012) at 1 (noting that if the Commission ''chooses to revise the [viewability] rule, it should require the availability of set-top boxes at no cost to the consumer.''). We note that in an *ex parte* dated June 8, 2012, NAB sought to ''withdraw'' its statement that cable operators may satisfy their viewability obligations through the use of DTAs. *See* NAB *Ex Parte* (dated June 8, 2012).

[36] *See* TWC Comments at 4.

[37] *See, e.g., Chevron U.S.A., Inc.* v. *Natural Res. Def. Council,* 467 U.S. 837, 863 (1984) (''The fact that the agency has from time to time changed its interpretation of the term 'source' does not, as respondents argue, lead us to conclude that no deference should be accorded the agency's interpretation of the statute.''); *see also FCC* v. *Fox Television Stations, Inc.,* 556 U.S. 502, 515 (2009) (To be sure, the requirement that an agency provide reasoned explanation for its action would ordinarily demand that it display awareness that it is changing position * * *. But it need not demonstrate to a court's satisfaction that the reasons for the new policy are better than the reasons for the old one; it suffices that the new policy is permissible under the statute, that there are good reasons for it, and that the agency believes it to be better, which the conscious change of course adequately indicates.'')

[38] *See* NAB *Ex Parte* (dated May 4, 2012) Attachment at 2. Section 614(b)(7) provides:

SIGNAL AVAILABILITY.—Signals carried in fulfillment of the requirement of this section shall be provided to every subscriber of a cable system. Such signals shall be viewable via cable on all television receivers of a subscriber which are connected to a cable system by a cable operator or for which a cable operator provides a connection. If a cable operator authorizes subscribers to install *additional* receiver connections, but does not provide the subscriber with such connections, or with the equipment and materials for such connections, the operator shall notify such subscribers of all broadcast stations carried on the cable system which cannot be viewed via cable without a converter box and shall offer to sell or lease such a converter box to such subscribers at rates in accordance with section 623(b)(3).

47 U.S.C. 534(b)(7) (emphasis added).

[39] *Id.*

[40] *See, e.g., Analog Must Carry Order, at* para. 34 (declining request for a special exception for commercial subscribers (*e.g.,* hotels and hospitals) that receive specially designed channel line-up; finding the Act is clear in its application of 614(b)(7) to every subscriber of a cable system and that it grants no authority to exempt specific classes of cable subscribers from the carriage requirements).

[41] *See 1996 OVS Order,* at para. 163 (recognizing that cable operators have complied with the must carry rules through the use of a basic tier, but allowing OVS operators to comply with the must carry rules without necessarily using a basic tier, reasoning that OVS operators ''may discover alternate methods to ensure that subscribers receive all appropriate must carry channels'').

[42] 47 U.S.C. 543(b)(7)(A).

[43] See Viewability Order, at para. 22.

[44] 47 U.S.C. 534(b)(7).

affordable cost does not render the second sentence ''irrelevant'' or ''surplusage'' in light of the third sentence, which requires operators, in a more limited situation, to offer to sell or lease converter boxes to subscribers at regulated rates. In short, our interpretation of the term ''viewable'' in the second sentence is different in scope and substance from the requirement set forth in the third sentence, which requires cable operators to offer or sell converter boxes to certain subscribers ''at rates in accordance with section 623(b)(3).'' [45]

10. NAB further argues that allowing cable operators to satisfy the viewability requirement by providing equipment conflicts with the ''signal quality'' provision set forth in Section 614(b)(4)(A), and in particular the requirement that ''the quality of signal processing and carriage provided by a cable system for the carriage of local commercial television stations will be no less than that provided by the system for carriage of any other type of signal.'' [46] NAB argues that reliance on set-top equipment ''would allow cable operators to discriminate by, for example, offering non-broadcast programming in a viewable format but not local broadcast signals,'' or to provide some local signals to analog subscribers, but not others.[47] It is not clear, however, that this provision applies here. Section 614(b)(4)(A) speaks specifically to the issue of ''nondegradation'' and ''technical specifications,'' and does not address the issue of viewability. In any event, even if that provision were to apply, it is not clear that carrying must-carry signals only in a digital format would violate the terms of 614(b)(4)(A). From a technical standpoint, a must-carry signal carried in standard definition (SD) arguably has the same ''quality of signal processing and carriage'' as a signal carried in analog format because both versions received at the headend should have the same resolution—480i—and thus there should be no perceivable difference between them.[48] Moreover, there is no evidence in the record to suggest that cable operators intend to use digital compression or other bandwidth saving techniques to ''degrade'' must-carry signals in such a way as to affect the subscriber's viewing experience.

11. Based on the foregoing, we agree with cable commenters that the statutory viewability requirement is ambiguous, and reasonably can be read in a manner to permit cable operators to require the use of equipment to view must-carry signals—although we emphasize that such equipment must be both available and affordable (or provided at no cost). We here choose a reasonable interpretation of the statutory text that best effectuates the statutory purpose in light of current marketplace conditions.[49] Moreover, the doctrine of constitutional avoidance [50] counsels us to interpret the Act as not imposing a rigid analog-carriage requirement on cable operators, where the record establishes a reasonable, less burdensome alternative that meets the statutory objectives.[51] Specifically, we are persuaded by cable commenters' argument that the dramatic changes in technology and the marketplace over the past five years render less certain the constitutional foundation for an inflexible rule compelling carriage of broadcast signals in both digital and analog formats.[52] (NAB observes that compliance with the viewability rule remains voluntary as operators have the option to convert their systems to all-digital operation, and thereby obviate the need to comply with the rule's analog carriage requirement.[53] Cable commenters, on the other hand, maintain that forcing operators to carry must-carry signals in analog format unduly hampers the efforts of cable operators to manage their own gradual transition to all-digital service in a manner that attracts customers to digital services while retaining value for those customers who still choose to rely only on analog service.[54]) The current record lacks evidence that infringing on cable operators' discretion by requiring both digital and analog carriage of the same broadcast stations is necessary to protect the viability of over-the-air broadcasting where an affordable set-top box option, that will achieve the same viewability, is readily available to customers. Nor is there evidence showing that allowing the viewability rule to sunset where the cable operator makes the digital signal available to its analog subscribers by offering the necessary equipment at an affordable cost will diminish the availability or quality of broadcast programming. (We are not persuaded by broadcasters' argument that allowing the rule to sunset will threaten the viability of local broadcasters because their analysis assumes that elimination of the viewability rule will automatically result in the broadcaster's signal being unavailable to all analog subscribers.[55] Their analysis fails to take into account that those analog customers who value must-carry channels may opt for equipment made available by the cable operator to continue accessing must-carry channels and other programming offered by the cable operator in a digital format.) We thus find that the burden placed on cable operators by the viewability rule is not justified on the current record, which demonstrates that a less burdensome alternative is available. Based on our analyses of current technology and marketplace conditions,[56] set forth in detail below,

[45] 47 U.S.C. 534(b)(7). We note that our new statutory interpretation (*i.e.,* that a hybrid system cable operator may satisfy the viewability mandate by offering analog subscribers equipment for free or at an affordable cost) is being implemented pursuant to sections 614(b)(7) and 615(h) of the Act, not as a rate regulation prescribed under section 623(b)(3) of the Act. Although some requirements set forth in section 623(b) are lifted when an operator is deregulated, deregulation would not be an exemption from the carriage requirements of the statute. *See Viewability Order,* at para. 29.

[46] 47 U.S.C. 534(b)(4)(A). *See also* NAB Ex Parte (dated May 4, 2012) Attachment at 2.

[47] NAB Ex Parte (dated April 13, 2012) at 2.

[48] *Fourth Report and Order,* FCC 08–193, 73 FR 61742, at para. 5, October 17, 2008.

[49] *See, e.g., NCTA* v. *Brand X Internet Services,* 545 U.S. 967, 980 (2005) (''ambiguity in statutes within an agency's jurisdiction to administer are delegations of authority to the agency to fill the statutory gap in reasonable fashion'').

[50] *See Frisby* v. *Schultz,* 487 U.S. 474, 483 (1988) (it is a ''well-established principle that statutes will be interpreted to avoid constitutional difficulties'').

[51] *See* TWC Comments at 7–8 (''particularly in light of significant First Amendment concerns presented by the Commission's viewability mandate, the Commission should allow that mandate to sunset as planned''); Bright House Reply at 9 (''The realities of today's video marketplace render obsolete any logical basis for burdening the First Amendment rights of cable operators and limiting the viewing options of cable customers by continuing to insist that hybrid cable systems not only carry must-carry signals, but carry them in analog''); *but see* NAB Reply Comments at 7–9; NAB Ex Parte (dated April 13, 2012) at 3–4 (''cable operators offer no evidence that the impact of the viewability rule on their First Amendment rights has materially changed since 2007; indeed, as more cable systems increase capacity or convert to digital, the actual impact of the rule will steadily decrease'').

[52] *See, e.g.,* TWC Comments at 18.

[53] *See* NAB Ex Parte (dated April 13, 2012) at 4–5.

[54] *See* NCTA Ex Parte (dated April 5, 2012) at 2; *see also* Bright House Reply at 6 (a cable system's digital transition must continue at a pace that properly balances the needs of its subscribers with available spectrum and allowing the viewability rule to sunset would aid the cable industry's digital transition).

[55] *See* NAB Ex Parte (dated April 23, 2012) Attachment.

[56] *See American Trucking Assns.* v. *Atchison, T. & S.F. Ry.,* 386 U.S. 397, 416 (1967) (''Regulatory agencies do not establish rules of conduct to last forever; they are supposed, within the limits of the law and of fair and prudent administration, to adapt their rules and practices to the Nation's needs in a volatile, changing economy. They are neither required nor supposed to regulate the present and the future within the inflexible limits of yesterday''); *American Civil Liberties Union* v. *FCC,* 823 F.2d 1554, 1565 (DC Cir. 1987) (FCC should ''carefully monitor the effects of its regulations [of cable television rates] and make adjustments where circumstances so require * * *. [W]e would not expect the Commission to adhere blindly to regulations that are cast in doubt by new

we now find that the most reasonable interpretation of the statute is that an operator of a hybrid system may comply with the viewability mandate by carrying a must-carry signal in a format that is capable of being viewed by analog customers either without the use of additional equipment or alternatively with equipment made available by the cable operator at no cost or at an affordable cost that does not substantially deter use of the equipment.

2. Changes in Technology and the Marketplace

12. Significant changes that have occurred in the marketplace and technology over the past five years confirm our determination that it is in the public interest to allow the 2007 viewability rule to sunset. At the time the rule was adopted, the Nation was preparing for the digital television transition, and a significant number of television viewers were unequipped to receive a digital signal.[57] In 2007, about 58 percent of television households subscribed to cable service and 46 percent of these cable subscribers (40 million households) received analog service. Moreover, there was no low-functionality and/or low-cost digital set-top box option available to ensure analog cable subscribers could access digital must-carry signals.[58] Consequently, the Commission faced the very real possibility that a significant number of cable customers could lose access to must-carry channels if hybrid cable systems were permitted to carry such signals only in digital format. Based on the state of the marketplace in 2007, the rule requiring hybrid cable systems serving analog subscribers to carry must-carry stations in analog format was a reasonable measure to ensure that must-carry signals were ''viewable'' and ''available'' to all subscribers as required by statute.[59]

13. The state of technology and the marketplace is significantly different now. About 50 percent of television households now subscribe to cable service (down from 58 percent in 2007), about 20 percent of these cable subscribers (about 12 million households) receive analog service (down from 40 million households in 2007), and the latter number is expected to drop to 16 percent (or fewer than 10 million households) by the end of 2012.[60] We continue to expect most cable operators will eventually transition to all-digital systems.[61]

14. More importantly, unlike in 2007, low-functionality/low cost digital equipment is now readily available as an option to cable consumers.[62] The cable industry has encouraged the development of small, low-cost set-top boxes, called ''Digital Transport Adapters'' (''DTAs''),[63] to enable customers to view digital signals, without having to obtain full-featured digital set-top boxes.[64] NCTA states that ''some cable operators * * * are already providing digital transport adapters (DTAs) to some or all of their customers at minimal or no cost.'' [65] According to industry reports, about 27 million DTAs were already deployed by year-end 2011.[66] In addition to DTAs, NCTA explains that ''[o]ther operators * * * are providing other types of affordable digital set-top boxes, with lesser capabilities and/or at substantially reduced prices for basic-only customers.'' [67] Moreover, NCTA states

developments or better understanding of the relevant facts''), *cert. denied,* 485 U.S. 959 (1988); *Natural Resources Defense Council, Inc.* v. *Herrington,* 768 F.2d 1355, 1408 (DC Cir. 1985) (DOE efficiency standards for household appliances ''would be patently unreasonable'' if ''based on data half a decade old'').

[57] *See, e.g.,* Brighthouse Reply at 4 (''When the Commission adopted the *Viewability Order,* it was confronting the broadcast industry's DTV transition and the fear that this historic event would trigger major viewer disruption. In that context, the Commission chose—*on a temporary basis* — to broadly apply cable's must-carry obligations so as to minimize the transitional impact on cable customers who were accustomed to receiving broadcast channels in analog. With that same transitional objective in mind, the cable industry acquiesced'').

[58] *See 2010 CableCARD Order,* FCC 10–181, 76 FR 40263, at paras. 49–50, July 8, 2011 (exempting for the first time HD DTAs from the Commission's integration ban; *see* 47 CFR 76.640(b)(4) and 76.1204(a)(1)). In addition, we note that only about 25 percent of television households had HD television sets. The Nielsen Company, *Nielsen Universe Estimates,* Jan. 1, 2007–Jan. 1, 2011, ''Mkt Breaks''; *National Media Related Universe Estimates,* Feb. 2011, ''Media UE Trends''; *Television Audience Report,* 2010–2011, at 4, *http://www.nielsen.com/us/en/insights/reports-downloads/2011/television-audience-report-2010-2011.html* (visited Mar. 23, 2012).

[59] *See* NCTA Reply at 4 (cable industry's commitment to comply with federal rules and to carry must-carry stations in analog format reflected a commitment the cable industry had previously made to Congress—''a commitment that also was expressly limited to three years'').

[60] *See* SNL Kagan, ''Video growth enjoys seasonal lift in Q1; service providers notch sub gains,'' (May 16, 2012) (''More than 80% of basic subs are now digital.''); SNL Kagan, ''SNL Kagan's 10-Year Cable TV Projections,'' (Jul. 28, 2011).

[61] *Id. See also* NCTA Ex Parte in MB Docket No. 11–169 (dated Feb. 7, 2012) at 4 (noting that ''in light of * * * pro-consumer benefits, cable operators have strong incentives to migrate rapidly to all-digital networks''); SNL Kagan, ''Cable's all-digital transition marches on without universal support,'' (Dec. 14, 2011) (stating that ''the U.S. cable industry's all-digital future is inevitable''). We note, for example, that BendBroadband and RCN have completed their transition to all-digital service, and Comcast and Cablevision are rapidly transitioning to all-digital service. *See* BendBroadband Comments in MB Docket No. 11–169 at 1–2; RCN Comments in MB Docket No. 11–169 at 2; Comcast Comments in MB Docket No. 11–169 at 4; Cablevision Comments in MB Docket No. 11–169 at 13; SNL Kagan, ''Video growth enjoys seasonal lift in Q1; service providers notch sub gains,'' (May 16, 2012) (''Greater than 93% of Comcast basic subs and more than 97% of Cablevision basic subs are now digital. Cablevision intends to complete the conversion of its entire network to digital later this year.'').

[62] We note that the number of television households with HD television sets has increased to about 64 percent for the 2010–2011 TV season (up from 25 percent in 2007). *See* The Nielsen Company, *Nielsen Universe Estimates,* Jan. 1, 2007–Jan. 1, 2011, ''Mkt Breaks''; *National Media Related Universe Estimates,* Feb. 2011, ''Media UE Trends''; *Television Audience Report,* 2010–2011, at 4, *http://www.nielsen.com/us/en/insights/reports-downloads/2011/television-audience-report-2010-2011.html* (visited Mar. 23, 2012). We also note that analog cable subscribers with digital TV sets with QAM tuners will be able to continue to view must-carry signals in digital without attaching additional equipment. Most television sets, consumer electronics devices, and leased set-top boxes have included QAM tuners since at least 2007, meaning that those devices are capable of tuning unencrypted digital cable service. *See BST Encryption NPRM,* FCC 11–153, 76 FR 66666, at paras. 4–6, October 27, 2011. In the pending *BST Encryption NPRM,* the Commission sought comment on whether to retain the basic service tier encryption prohibition for all-digital cable systems; the Commission did not propose to allow encryption of basic service tier signals on hybrid systems, which are at issue here. *Id.* at para. 9. *See also* Bright House Reply at 5 (explaining that many cable customers who have not yet subscribed to a digital service tier are able to directly access unencrypted digital signals included in their cable system's basic service tier through their television sets purchased within the last five years).

[63] DTAs are simple one-way digital-to-analog set-top boxes that can provide cable consumers with access to the basic service tier and the expanded basic service tier. These devices are small enough to be attached to the back of a television set. *See, e.g.,* ''The Comcast Digital Transport Adapter'' at *http://www.bocsco.com/comcast_dta.php* (BOCS Web site visited May 3, 2012) (link contained in NCTA Comments at 13); ''All About Digital Adapters'' at *http://customer.comcast.com/help-and-support/cable-tv/digital-adapter/* (Comcast Web site visited May 3, 2012); Jeff Baumgartner, ''Digital Transport Adapters (DTAs),'' Light Reading (Jul. 15, 2009), available at *http://www.lightreading.com/document.asp?doc_id=179245* (visited May 3, 2012). *See also* Cisco Systems, Inc. Ex Parte (dated May 23, 2012) Attachments.

[64] *See* NCTA Comments at 12. *See also* TWC Ex Parte (dated May 7, 2012) at 1 (in connection with one of its system's all-digital transition, the cable operator offered its subscribers the use of one or more DTAs at no charge for two years, as an alternative to leasing full-featured set-top boxes or purchasing CableCARD-equipped retail devices, and offered subscribers the opportunity to lease one or more DTAs for 99¢ per month after the initial free offer expires).

[65] NCTA Ex Parte (dated April 26, 2012) at 2.

[66] *See* SNL Kagan, ''Cable set-top forecast: Industry's move to IP video impacts projections,'' (Sept. 16, 2011).

[67] NCTA Ex Parte (dated April 26, 2012) at 2. *See also* ACA Ex Parte (dated Jun. 4, 2012) at 3 (stating that ''ACA members who operate hybrid analog/digital systems make available for lease digital set-top boxes that permit digital-only signals to be viewed on analog television sets, and analog-only cable customers that are served by these hybrid

Continued

that ''the eight largest incumbent cable operators'' have committed to ''make available to analog-only households, upon request, low-cost set-top devices capable of displaying basic service tier signals on analog television sets.'' [68] Therefore, we expect that DTAs, or similar devices, will be made broadly available on cable systems throughout the country.[69] The low cost set-top box offers reflected in our record will satisfy our new interpretation of the viewability requirement, permitting a cable operator to make the must-carry signals available by offering analog customers the necessary digital equipment at an affordable cost.[70] Specifically, the record reflects that Comcast, for a period of time after migrating a system to all-digital, typically offers two or three free DTAs to customers at no cost, and charges less than $2 for additional boxes.[71] Similarly, Time Warner Cable states that in transitioning one of its systems to digital it has offered subscribers ''one or more'' DTAs free of charge for the first two years and 99 cents per month thereafter.[72] In addition, Bright House states that it offers set-top boxes to basic service tier subscribers for $1 a month.[73] We find that this range of charges for DTAs and set-top boxes—*i.e.,* free or a monthly fee of no more than $2—would satisfy the requirement for affordable equipment because the minimal additional cost, if any, is unlikely to discourage use of this equipment.[74] Materially higher leasing fees, however, could deter subscriber willingness to order the equipment needed to ensure viewability on a hybrid cable system. [75] Accordingly, such fees would not meet the statutory viewability requirement as we interpret it.[76]

3. Effect on Must-Carry Stations, Cable Operators, and Consumers

15. We are not persuaded by the broadcasters' analysis that allowing the current viewability rule to expire on schedule will threaten the viability of must-carry stations.[77] According to the broadcasters, approximately 12.6 million households receive only analog cable service, representing approximately 11 percent of all U.S. television households, and removing that percentage of a station's audience ''could well have a profound impact on affected stations.'' [78] As NCTA points out, however, the broadcasters' analysis overstates the impact on such stations because it assumes that elimination of the rule will automatically result in the broadcaster's signal being unavailable to all analog subscribers.[79] To the contrary, our new statutory interpretation—which hinges on a cable operator making equipment available at no cost or an

systems can commonly obtain boxes from their providers at low cost'').

[68] NCTA Ex Parte (dated May 17, 2012) at 2 (noting that the eight largest cable operators ''collectively serve more than 70 percent of all analog-only cable customers'').

[69] We understand that DTAs are widely available to cable systems using Motorola technology and, according to TWC, ''Cisco does make DTAs available for use with Cisco headend equipment.'' *See* TWC Ex Parte (dated May 7, 2012) at 2 (noting, however, that ''TWC to date has not deployed DTAs in a Cisco cable system''). *See also* Cisco Systems, Inc. Ex Parte (dated May 23, 2012) at 1 (stating it has ''produced and markets Digital Transport Adaptors for use in conjunction with multichannel video programming distribution systems'').

[70] Our ruling today is not inconsistent with section 629 of the Act, which was enacted to ensure the commercial availability of navigation devices. 47 U.S.C. 549. We expect many cable operators will offer DTAs to analog subscribers to fulfill the viewability mandate. Therefore, we do not expect that these low-cost limited functionality devices will have an effect on the development of a commercial market for navigation devices. *See, e.g., 2010 CableCARD Order,* at para. 49 (exempting limited capability HD set-top boxes from the integration ban); *Cable One Waiver,* FCC 09–45, at para. 13 (rel. May 28, 2009). As noted previously, for purposes of the retail market, consumers prefer advanced two-way devices capable of receiving the electronic programming guide, video on demand, and other interactive features, which are not made available by DTAs. *See Cable One Waiver,* at paras. 13–14. Nevertheless, to the extent such advanced two-way boxes are offered below the cost reasonably allocable to such box, we remind operators of their obligations to offer a comparable discount to CableCARD customers on the same service plan. 47 CFR 76.1205(b)(5)(ii)(B)(2).

[71] *See* NCTA Ex Parte (dated Feb. 21, 2012) in MB Docket No. 11–169 at 4; New Jersey Division of Rate Counsel Comments in MB Docket No. 11–169 at 6. *See also, e.g.,* SNL Kagan, ''All-digital migration drives set-top outlook,'' (Sept. 22, 2009); Jeff Baumgartner, ''Comcast Seeds Digital Shift With Free Boxes,'' Light Reading (Nov. 4, 2008), available at *http://www.lightreading.com/document.asp?doc_id=167256&site=lr_cable* (visited May 3, 2012); Jeff Baumgartner, ''Comcast Starts to Kiss Analog TV Goodbye,'' Light Reading (Jan. 6, 2012), available at *http://www.lightreading.com/document.asp?doc_id=216104&site=lr_cable* (visited May 3, 2012).

[72] TWC Ex Parte (dated May 7, 2012) at 1.

[73] Bright House Ex Parte (dated May 14, 2012) at 1.

[74] We note that, to the extent a cable operator of a hybrid system elects to cease down-converting a must-carry signal and instead chooses to provide analog customers the necessary digital equipment to view such signal, such equipment must continue to meet the affordability requirements described herein until the operator completes its transition to all-digital service.

[75] Concerns in the record about the cost of equipment appear to assume costs comparable to those ordinarily charged for full-function boxes, while our affordability requirement ensures that if equipment is used to provide viewability, that equipment will be available at a nominal cost or no charge. *See, e.g.,* National Black Religious Broadcasters, Lieberman Broadcasting Inc., Una Vez Mas, ION Media Networks, NRJ TV LLC (collectively ''Must-Carry Broadcasters'') Joint Ex Parte (dated Jun. 9, 2012) at 4, n.6.

[76] We note that, to the extent such equipment is subject to rate regulation, operators must also comply with those requirements. *See* 47 U.S.C. 543(b)(3); 47 CFR 76.923.

[77] *See* NAB *Ex Parte* (dated April 23, 2012) Attachment (providing an economic analysis on the impact of reduced cable carriage on must-carry stations). *See also* NAB *Ex Parte* (dated April 23, 2012) Attachment at 3 (if a must-carry station ''were to lose access to a number of cable households through the elimination of the viewability rule, its revenue would certainly decrease''); NAB *Ex Parte* (dated April 13, 2012) at 2–3 (if the viewability rule were allowed to sunset, ''there is a significant potential for must carry stations to lose audience share'' and to the extent a must carry station's financial viability is harmed, it ''would harm not only the cable subscribers that can no longer view must carry stations, but potentially all of those stations' viewers''). Several must-carry broadcasters filed ex parte letters to support NAB's analysis. *See, e.g.,* Liberman Broadcasting, Inc. (''Liberman'') *Ex Parte* (dated Apr. 26, 2012); National Religious Broadcasters *Ex Parte* (dated Apr. 26, 2012); ION Media Networks (''ION'') *Ex Parte* (dated Apr. 27, 2012); Una Vez Mas, LP *Ex Parte* (dated Apr. 27, 2012); Francis Wilkinson (Costa De Oro Media, LLC) *Ex Parte* (dated Apr. 30, 2012); Sunbelt Multimedia Co., *Ex Parte* (dated May 1, 2012); WTVA, Inc. *Ex Parte* (dated May 2, 2012); Named State Broadcaster Associations *Ex Parte* (dated May 3, 2012); Mapale LLC *Ex Parte* (dated May 7, 2012); The ABC Television Affiliates Association, the CBS Television Network Affiliates Association, and the NBC Television Affiliates (the ''Affiliates Associations'') (dated May 9, 2012); The Ohio Association of Broadcasters (OAB), the Virginia Association of Broadcasters (VAB), and the North Carolina Association of Broadcasters (NCAB) *Ex Parte* (dated May 9, 2012); Daystar Television Network (DTN) *Ex Parte* (dated May 11, 2012); FOX Affiliates Association *Ex Parte* (dated May 14, 2012); Christian Television Network *Ex Parte* (dated May 22, 2012); Trinity Christian Center of Santa Ana, Inc. d/b/a Trinity Broadcasting Network (TBN) *Ex Parte* (dated May 24, 2012). ; Regional News Network (WRNN–TV) *Ex Parte* (dated May 25, 2012); Bert Ellis *Ex Parte* (dated Jun. 4, 2012); Entravision Holdings, LLC *Ex Parte* (dated Jun. 4, 2012); KVMD Licensee Co., L.L.C. *Ex Parte* (dated Jun. 4, 2012); NRJ TV LLC (''NRJ'') *Ex Parte* (dated Jun. 4, 2012); Rancho Palos Verdes Broadcasters, Inc. (RPVB) *Ex Parte* (dated Jun. 4, 2012); Northwest Broadcasting Inc. *Ex Parte* (dated Jun. 5, 2012); Ramar Communications, Inc. *Ex Parte* (dated Jun. 5, 2012); OTA Broadcasting *Ex Parte* (dated Jun. 6, 2012); Must-Carry Broadcasters Joint *Ex Parte* (dated Jun. 9, 2012).

[78] *See also* NAB *Ex Parte* (dated April 23, 2012) Attachment at 2. In addition, Affiliate Associations argue that if the viewability rule was allowed to sunset, stations electing retransmission consent could also ''face audience and revenue losses because many retransmission consent agreements reference the requirements of the viewability rule. If the rule were to go away, cable operators likely would insist that they have no obligation to ensure retransmission consent signals are available to all subscribers.'' *See* Affiliates Associations *Ex Parte* (dated May 9, 2012) at 2; FOX Affiliates Association *Ex Parte* (dated May 14, 2012) at 2. We do not find this argument to be persuasive or to provide a basis for extending the viewability rule. As we have said before certain local broadcast station programming is ''highly valued by consumers'' and ''carriage of local television broadcast station signals is critical to MVPD offerings.'' Memorandum Opinion and Order, FCC 03–330, para. 202 (rel. Jan. 14, 2004). Given cable subscribers' demand for access to retransmission consent stations, we do not expect our approach to the viewability requirement for must-carry stations to significantly impact carriage of broadcast stations that elect to negotiate terms for retransmission consent rather than invoking their statutory must-carry rights.

[79] *See* NCTA *Ex Parte* (dated April 26, 2012) at 2.

affordable cost [80]—will ensure that subscribers on hybrid systems may continue to access these signals at little or no additional expense.[81] As cable commenters explain, a must-carry signal carried only in digital format would still be included in the basic service tier; analog cable subscribers would not be required to subscribe to an enhanced tier of service to view the digital version of a must-carry channel.[82] We also expect this issue to diminish over time given that the number of analog cable subscribers is expected to continue to decrease as more cable customers choose to upgrade to full digital service and as more hybrid cable systems complete their transition to all-digital systems.[83]

16. The record further reflects that eliminating the rule will result in significant benefits to cable operators in meeting the increasing demands of the large majority of their customers, *i.e.,* those subscribing to digital services.[84] NCTA explains that ''cable operators face capacity demands from an increasing proliferation of HD programming services as well as from broadband video services'' and need flexibility to ''serve the needs of all their customers while transitioning from analog to digital service.'' [85] NCTA explains that there are currently more than 183 HD cable networks (including basic, premium, and regional sports channels), up from only 22 in September 2007 when the Commission adopted the viewability rule.[86] According to staff review of the 2011 Annual Cable Operator Report data and the 2010 Cable Price Survey data, more than 96 percent of cable systems carry at least one must-carry station, and, on average, each system carries more than seven must-carry stations.[87] Each must-carry station carried in analog occupies 6 MHz of bandwidth that the cable operator could otherwise use for 10–12 standard definition (''SD'') digital streams, 2–3 HD video streams, or significant broadband capacity.[88] Thus, as cable commenters explain, elimination of the viewability rule will provide operators the needed flexibility to meet fast-changing consumer demands for HD cable services and high-speed broadband services.[89]

4. Six-Month Transition Period

17. To facilitate a smooth transition, we adopt, for a six-month transition period following the sunset of our viewability rule,[90] an interim requirement that operators of hybrid cable systems must continue to carry the signals of must-carry stations in analog format to all analog cable subscribers. Critical to our decision to allow the viewability rule to sunset is the availability of affordable set-top boxes to affected cable subscribers. A six-month transition period will provide cable operators an opportunity to acquire an adequate supply of equipment for subscribers impacted by any carriage change.[91] It will also provide time for

[80] We are not persuaded by broadcasters' argument that equipment use here should be banned for the same reason the ''A/B switch'' solution was rejected in the early 1990s. *See* ION and Liberman Joint *Ex Parte* (dated Jun. 1, 2012) at 6. An ''A/B switch'' is a method of manually toggling between cable and broadcast programming to allow cable subscribers to watch broadcast programming not carried on cable. The ''A/B switch'' solution was rejected because of numerous technical problems associated with the device and considerable evidence (including two empirical studies) showing a lack of consumer acceptance of the switch. *See Turner Broad. Sys., Inc.* v. *FCC,* 520 U.S. 180, 219–21 (1997). We are presented with a very different situation here. First, while the ''A/B switch'' required subscribers to access must-carry stations over-the-air, in the situation here must-carry stations will continue to be carried on the digital tier of the cable system. There will be no manual toggling involved to access must-carry stations. Rather, the available DTA (or similar equipment) will provide subscribers equivalent access to all cable programming, including must-carry stations. In addition, the record lacks any suggestion of technical problems associated with the use of DTAs or low-cost set-top boxes. Likewise, there is no evidence of any problem with customer acceptance. As indicated above, for example, approximately 27 million DTAs had been deployed by year-end 2011.

[81] We note that subscribers served by analog-only systems would not be impacted by the sunset of the viewability rule because those systems would be required to continue to carry must-carry channels in analog format. *See* 47 CFR 76.56. According to NCTA, more than half a million cable customers are served by analog-only systems as of year-end 2011. *See* NCTA Ex Parte (dated April 26, 2012) at 2, n.7.

[82] *Id.* at 2. *See also* TWC Ex Parte (dated May 7, 2012) at 2 (explaining that the rates TWC charges for the basic service tier do not vary depending on whether the subscriber accesses an analog or digital version of services carried on that tier).

[83] *See* SNL Kagan, ''SNL Kagan's 10-Year Cable TV Projections,'' (Jul. 28, 2011). SNL Kagan projects that the percentage of cable subscribers subscribing to digital cable service will reach about 84 percent by year-end 2012, 88 percent by year-end 2013, 91 percent by year-end 2014, and 93 percent by year-end 2015. *Id. See also* NCTA Ex Parte dated April 26, 2012, at 2–3 (noting that the number of digital households increased from 54% to 78% during the four years between 2007 and 2011, and that the percentage of digital households had further increased by December 2011 to 79.4%; and stating that ''there is no reason to believe that the steady decline in the number of analog-only households will not continue'').

[84] *See, e.g.,* Bright House Reply at 5–6 (arguing that the viewability rule inefficiently consumes ''precious cable capacity that could be better deployed for enhanced broadband services'' with ''little to no offsetting public benefit'').

[85] NCTA Reply at 5; Bright House Reply at 4 (''[a]nalog carriage of each and every must carry station imposes a heavy burden on capacity-strained cable systems''). *See also* Bright House Reply at 6 (''Data-usage by the average Internet user has increased a thousand-fold in the last decade. Over the next three years, this trend will continue and even accelerate, and cable operators will need flexibility to meet fast-changing consumer demands''). Broadcasters do not dispute that carriage of analog signals take up more bandwidth than digital signals, but respond that a cable operator could avoid the bandwidth issue by transitioning its hybrid system to an all-digital system. NAB Comments at 5 (''As cable systems convert, whatever burden the Viewability Rule might have imposed will disappear.'').

[86] NCTA Comments at 13.

[87] *See Fourth FNPRM,* at para. 10, n.36. In the *Fourth FNPRM,* we estimated that almost 40 percent of all broadcast stations elected or defaulted to must-carry rather than electing retransmission consent. *Id.*

[88] *See, e.g.,* SNL Kagan, ''All-digital footprints make gains amid uneven commitment by operators,'' (Dec. 13, 2010) (noting potentially significant efficiencies from reclaiming analog channels); Communications Technology, ''QAM Modulator: Tactics at the Edge,'' (Aug. 24, 2009) available at *http://www.cable360.net/ct/news/ctreports/QAM-Modulator-Tactics-at-the-Edge_37234.html* (visited May 7, 2012). *See also* Bright House Reply at 6–7 (''Requiring a cable operator to carry a single must-carry channel in analog consumes the same cable spectrum as a *dozen* standard digital services. This lopsided loss of programming (which will only grow more extreme as new compression advancements are implemented) is clearly contrary to the best interests of the vast majority of cable customers, who can already view must carry programming in digital'').

[89] *See, e.g.,* NCTA Comments at 15 (stating that ''greatly increased demand for capacity to accommodate HD cable services and broadband video services has made it imperative for cable operators to use their capacity efficiently.''); NCTA Reply at 5 (explaining that the rule impedes consumer demands for ''an increasing proliferation of HD programming services as well as from broadband video services''); Bright House Reply at 6 (explaining that data-usage by the average Internet user has increased a thousand-fold in the last decade and over the next three years this trend will continue and even accelerate).

[90] *I.e.,* December 12, 2012.

[91] *See* TWC Ex Parte (dated May 7, 2012) at 2 (confirming that ''TWC to date has not deployed DTAs in a Cisco cable system, but TWC understands that Cisco does make DTAs available for use with Cisco headend equipment''). *See also* Baja Broadband Operating Company, LLC, Request for Waiver of § 76.1204(a)(1) of the Commission's Rules, CSR–8357–Z, DA No. 12–899 (rel. Jun. 7, 2012) (noting that HD DTAs are expected to be available to the small cable operator by October 2012). Contrary to the broadcasters' suggestion, the Baja waiver grant does not suggest an issue with the availability of DTAs in general. *See* NAB Ex Parte (dated Jun. 8, 2012) at 2, n.5; Must-Carry Broadcasters *Ex Parte* (dated Jun. 9, 2012) at 4. First, the Bureau Order pertains to a small cable operator's short term need for HD DTAs. The Bureau Order does not address the availability of SD DTAs, which would also be sufficient for purposes of accessing the signals of must-carry stations carried in digital format. *See* NCTA Ex Parte (dated Jun. 11, 2012) at 2 (''Analog customers typically use standard-definition DTAs to access digital cable services on their analog TVs. There is no shortage of such DTAs in the marketplace. In fact, cable operators have deployed tens of millions of such DTAs to date, and these DTAs are in plentiful supply from a variety of vendors. The types of DTAs referenced in the Baja Broadband Waiver Order—HD DTAs—are just now coming to market and are expected to become more widely available in coming months.''). Second, the Bureau Order observes that the HD DTAs are expected to be available in October 2012 (*i.e.,* within seven months of the waiver request date of March 9, 2012), a time frame consistent with the six-month

Continued

cable operators to comply with our existing rules requiring notification to broadcasters and customers about any planned change in carriage or service and the operator's equipment offerings, as well as allow consumers sufficient time to make any necessary arrangements.[92] As part of the cable operators' required notification to their subscribers of any carriage changes, the cable operators have committed to inform affected subscribers that equipment is required to continue viewing the must-carry signal and how to obtain that equipment.[93] We believe informing consumers about equipment is a critical part of a hybrid operator's viewability obligations in these circumstances and thus rely upon this commitment in rendering our decision today. Similarly, we rely upon the cable operators' commitment to give broadcasters a minimum of 90 days notice before undertaking any carriage changes.[94] We believe that such advance notice will provide repositioned must-carry stations sufficient time to communicate with their viewers. Advance notice about planned carriage changes will allow must-carry stations to notify their viewers—through on-air messages, Web site postings, mailings or other forms of communications of their choosing—about the planned change in carriage, and about the viewers' options to ensure continued access to the station's programming.[95] We believe effective consumer outreach, particularly during the six-month transition period, will greatly minimize the impact that sunset of our viewability rule may have on consumers and must-carry stations.

18. We remind cable operators that the sunset of our viewability rule does not otherwise affect the must-carry requirements of § 76.56 of our rules.[96] Cable operators providing digital cable service must continue to carry local broadcast stations electing mandatory carriage, including in HD format when broadcast in such format, and cable operators providing only analog cable service (no digital service) must continue to carry local broadcast stations electing mandatory carriage in analog format.[97] By allowing our current viewability rule to sunset, however, we provide hybrid cable system operators the flexibility to best meet the needs of their subscribers during their move to an all-digital system. Under our more flexible statutory interpretation, operators of hybrid systems may choose to comply with the statutory viewability mandate by continuing to down-convert digital must-carry stations to analog format in addition to carrying those stations in digital SD and/or HD format if that best suits their individual business plans. Alternatively, after December 12, 2012, an operator of a hybrid system may choose to satisfy the viewability mandate by making must-carry signals available to analog subscribers by offering the necessary equipment for sale or lease, either for free or at an affordable cost that does not substantially deter use of the equipment.[98] Additionally, sunset of the current viewability rule allows hybrid cable system operators the flexibility to benefit from future marketplace and technology developments through possible methods of compliance not contemplated on the record now before us. We emphasize that, while we allow our viewability rule to sunset, the statutory viewability requirement remains in effect. Therefore, a must-carry station may file a complaint pursuant to § 76.61 of our rules if it believes a cable operator has failed to meet its statutory carriage obligations.[99] In addition, we will consider informal consumer complaints when evaluating compliance with the statutory viewability requirement.[100] If we receive a significant number of well-founded consumer complaints that an operator is not effectively making affordable set-top boxes available to customers in lieu of analog carriage of a channel, one of the possible remedies would be to require the operator to resume analog carriage of the channel.[101]

III. HD Carriage Exemption

A. Background

19. The Act requires that cable operators carry broadcast signals ''without material degradation.'' [102] In

transition period that we adopt today. Thus, the transition period should afford small operators the time needed to acquire any necessary equipment, including HD DTAs. Moreover, we expect that our Order today will provide an incentive for DTA manufacturers to ramp up production. Third, we reiterate that cable operators must have an adequate supply of affordable boxes to offer their customers in order to satisfy the statutory viewability requirement. To the extent that DTAs or low cost set-top boxes are not otherwise available to a particular hybrid cable operator, that operator could not terminate analog carriage of the must-carry stations.

[92] *See* 47 CFR 76.1601 (requiring cable operators to ''provide written notice to any broadcast television station at least 30 days prior to either deleting from carriage or repositioning that station. Such notification shall also be provided to subscribers of the cable system.''); 47 CFR 76.1603(b) (requiring cable operators (i) to notify customers of any changes in rates, programming services or channel positions ''as soon as possible in writing''; (ii) to give customers notice at least 30 days in advance of such changes if the change is within the control of the cable operator; and (iii) to notify subscribers 30 days in advance of any significant changes in other information listed in § 76.1602); 47 CFR 76.1602(b) (listing customer service-general information to include (1) products and services offered and (2) prices and options for programming services and conditions of subscription to programming and other services). *See also* NCTA *Ex Parte* (dated May 17, 2012) at 2 (stating that the eight largest incumbent cable operators have committed to ''make available to analog-only households, upon request, low-cost set-top devices capable of displaying basic service tier signals on analog television sets'' and to ''provide ample notice to affected subscribers of these set-top box offers''); TWC *Ex Parte* (dated May 7, 2012) at 2 (''where TWC chooses to cease analog transmission of one or more must-carry stations in a hybrid digital/analog cable system, it will provide advance notice regarding available equipment that will enable subscribers with direct connections to analog television sets to continue viewing such broadcast signals''); Bright House *Ex Parte* (dated May 14, 2012) at 1; NCTA *Ex Parte* (dated May 17, 2012) at 2; TWC *Ex Parte* (dated May 7, 2012) at 2 (committing to providing advance notice when terminating analog carriage).

[93] *See* NCTA *Ex Parte* (dated May 17, 2012) at 2 (stating that the eight largest incumbent cable operators will ''provide ample notice to affected subscribers'' of the availability of low-cost set-top devices capable of displaying basic service tier signals on analog television set); ACA *Ex Parte* (dated Jun. 11, 2012) at 1 (stating similar commitment by ACA's 14 largest members serving more than 50% of all subscribers served by ACA membership).

[94] *See* NCTA *Ex Parte* (dated Jun 8, 2012) at 2 (stating that where the eight largest incumbent cable operators wish to stop carrying the analog version of a must-carry station's signal, such cable systems will provide notice to the affected must-carry station at least 90 days in advance of the carriage change); ACA *Ex Parte* (dated Jun. 11, 2012) at 1–2 (stating similar commitment by ACA's 14 largest members serving more than 50% of all subscribers served by ACA membership).

[95] *Id.*

[96] 47 CFR 76.56.

[97] *See id.*

[98] *See para.* 14, *supra.*

[99] *See* 47 CFR 76.61. As mentioned above, critical to our decision to allow the viewability rule to sunset is the availability of affordable set-top boxes to affected cable subscribers.

[100] Consumers may file a complaint electronically using the Commission's online complaint form, Form 2000e—Media (General) Complaint, available at *http://esupport.fcc.gov/complaints.htm.* Consumers may also file complaints by fax to 1–866–418–0232 or by letter mailed to Federal Communications Commission, Consumer & Governmental Affairs Bureau, Consumer Inquiries & Complaints Division, 445 12th Street, SW., Washington, DC 20554. Consumers who want assistance filing their complaint may contact the Commission's Consumer Call Center by calling 1–888–CALL–FCC (1–888–225–5322) (voice) or 1–888–TELL–FCC (1–888–835–5322) (tty). There is no fee for filing a consumer complaint.

[101] We recognize that resolving whether an analog carriage remedy is appropriate could in some cases raise issues that would appropriately be considered by the full Commission in the first instance.

[102] *See* 47 U.S.C. 534(b)(4)(A) (''The signals of local commercial television stations that a cable operator carries shall be carried without material degradation. The Commission shall adopt carriage standards to ensure that, to the extent technically feasible, the quality of signal processing and carriage provided by a cable system for the carriage of local commercial television stations will be no less than that provided by the system for carriage of any other type of signal.'') and section 535(g)(2) (''A cable operator shall provide each qualified local noncommercial educational television station

the context of the carriage of digital signals, the Commission has interpreted this requirement to contain two parts: First, cable operators may not discriminate in their carriage between broadcast and non-broadcast signals, and, second, HD broadcast signals must be carried to viewers in HD.[103] In response to concerns from small cable operators about cost and technical capacity, the *Fourth Report & Order* afforded a temporary exemption from the HD carriage requirement for certain small systems.[104] Specifically, the Commission exempted small cable systems with 2,500 or fewer subscribers that are not affiliated with a cable operator serving more than 10 percent of all MVPD subscribers, and those with an activated channel capacity of 552 MHz or less. The exemption from the material degradation rules allows such systems to carry broadcast signals in standard definition (SD) digital and/or analog format, even if the signals are broadcast in HD, as long as all subscribers can receive and view the signal.[105] The Commission provided that the exemption would expire three years after the conclusion of the DTV transition, but said it would consider whether to extend the exemption in the final year.[106] The *Fourth FNPRM* undertook this review and tentatively concluded to extend the existing exemption for three more years, given small cable systems' apparent widespread reliance on it.[107] In response to the *Fourth FNPRM,* cable commenters support extension of the HD carriage exemption, while broadcasters suggest that the exemption should not apply if a system carries any signal in HD.[108]

B. Discussion

20. We find that the small-system HD carriage exemption continues to serve the public interest and adopt our tentative conclusion to extend the exemption for three more years.[109] The record shows that a significant number of small systems with financial or channel capacity constraints continue to rely on the HD carriage exemption and require additional time to come into compliance in a cost-effective way.[110] For example, ACA reports that at least 52 of its members, representing more than 385 small systems, still rely on the exemption.[111]

21. We find that the same financial and capacity constraints that faced small cable operators when we initially adopted this exemption continue to exist today. For example, cable commenters persuaded the Commission in 2008 that, without an exemption from the material degradation rules, ''small systems [would] be forced to absorb or impose significant and unsustainable price increases, or in some instances to shut down altogether.'' [112] This is because some small systems did not have the technical capability or system capacity to carry high definition digital signals, and in some cases had so few subscribers that per-subscriber costs to upgrade to that capacity would be so high as to make it not worthwhile to continue operating the system.[113] The record shows that the challenges facing small systems have not diminished since the Commission adopted the exemption and that requiring small systems to comply with the HD carriage requirement would result in these systems dropping existing channels or shutting down.[114] Thus, as ACA points out, the result for subscribers of these systems could include ''increased rates, loss of desired channels, loss of not only video service, but the potential for broadband Internet access, and the loss of the benefits that flow from competition.'' [115] NCTA explains that eliminating the HD exemption would also impede small operators' ''ability to offer new services like video-on-demand, deploy broadband, or introduce enhanced new speed tiers of broadband to more rural, smaller market customers.'' [116] ACA maintains that, for most capacity-constrained small systems, the unused channel capacity available has actually decreased over the past three years.[117] In addition, ACA reports that, for most financially-constrained small systems, operation costs have increased more than revenues over the last three years, leaving these systems without the financial resources to purchase the necessary equipment to upgrade service.[118] Notably, these small systems often serve rural and smaller market consumers, making the potential loss of such service particularly troubling.[119] As noted in the *Fourth Report & Order,* the loss of a small cable system could mean the effective loss of all MVPD service for some customers.[120] Moreover, in some areas, due to poor over-the-air reception, the loss of a small cable system could mean the loss of any access to some or all broadcast signals as well. Accordingly, we find that the exemption remains necessary to protect the viability of small systems and their service to rural and smaller market consumers.[121]

22. This exemption will sunset on June 12, 2015, unless the Commission takes action to extend it in light of the potential cost and service disruption to consumers and the state of technology and the market at that time. We note that this exemption is not intended to be permanent and that its purpose is to provide small systems with additional time to upgrade and, where necessary, expand their systems to come into full

whose signal is carried in accordance with this section with bandwidth and technical capacity equivalent to that provided to commercial television broadcast stations carried on the cable system and shall carry the signal of each qualified local noncommercial educational television station without material degradation.'').

[103] *Viewability Order,* at para. 7; *see also* 47 CFR 76.62.

[104] *See generally Fourth Report & Order.*

[105] *Fourth Report & Order,* at para. 5. We note that our rules do not require cable operators, irrespective of system size, to carry an SD digital version of a broadcast station's signal, in addition to the analog version, to satisfy the material degradation requirement. This is because both an SD digital version and an analog version of the digital broadcast signal received at the headend should have the same resolution—480i—and thus there should be no perceivable difference between the two versions of the signal. *Id.*

[106] *Id.* at 13622, para. 11 (stating that ''a three-year sunset provides the Commission with the opportunity after the transition to review these rules in light of the potential cost and service disruption to consumers, and the state of technology and the marketplace'').

[107] *Fourth FNPRM,* at para. 3. Based on the 2010 data from the Annual Cable Operator Report (FCC Form 325), the *Fourth FNPRM* indicated that many small systems were relying on the exemption. *Fourth FNPRM,* at para. 20; *see also Fourth FNPRM* at Appendix B (discussing our analysis of FCC Form 325 data).

[108] *See, e.g.,* NAB comments at 8; NCTA comments at 29; ACA comments at 18–19.

[109] We note that we are not changing the existing exemption in any way and this includes retaining our existing definition of small systems that are eligible for this exemption.

[110] *See, e.g.,* ACA Comments at 4–6; NCTA Comments at 22.

[111] *See* ACA comments at 5; ACA reply at 7–8 (''Of these 385 small systems, 45 rely on the exemption because they have less than 553 MHz of capacity; 106 systems rely on it because they have fewer than 2,501 subscribers; and 234 systems rely on the exemption because they have both less than 553 MHz of capacity and fewer than 2,501 subscribers. These numbers only include the respondents to ACA's survey, and the total number of ACA members and the total number of their systems that are currently utilizing the HD carriage exemption is likely higher.'').

[112] National Cable & Telecommunications Association Comments at 12 (March 3, 2008).

[113] *Fourth Report & Order,* at paras. 6–7.

[114] *See, e.g.,* ACA Reply at 3.

[115] *Id.* at 5–6.

[116] NCTA Comments at 27.

[117] ACA Comments at 7.

[118] ACA Comments at 11.

[119] NCTA Comments at 23.

[120] *Fourth Report & Order,* at para. 7.

[121] ACA and NCTA also sought a permanent exemption from the HD carriage obligation to cable systems that offer all of their programming in analog only. ACA Comments at 17–18; NCTA Comments at 28–29. We received little in the record on this issue, and need not resolve it here. To the extent these systems are small systems as defined in this Order, of course, they are exempted for three years from the HD carriage obligation.

compliance with the material degradation provisions of the carriage rules by carrying HD versions of all HD broadcast signals without having to make relatively large expenditures over a short period of time.

23. We decline, at this time, to further restrict the exemption for small systems by eliminating it for systems that carry any signal in HD, as suggested by NAB.[122] The Commission has already crafted the exemption quite narrowly to excuse only a limited number of systems with particularly limited channel capacity or low subscribership.[123] We agree with ACA that a small system's ability to offer some HD service does not refute an argument that it may be significantly burdensome to offer additional HD service.[124] Further, we do not want to create a disincentive for these systems to take incremental steps toward offering more HD programming to their subscribers by using the carriage of any HD signals as a threshold for applying the HD must-carry requirement to small cable systems.[125] Although we understand NAB's concern that small systems could possibly misuse the exemption of the HD carriage requirement to unfairly discriminate against must-carry HD signals in favor of other HD signals,[126] broadcasters have not presented any evidence to suggest that this is, or ever has been, an issue. Moreover, to the extent that cable operators utilizing the exemption do start to carry a wide range of HD channels, broadcasters are free to bring such evidence to the Commission's attention, and we will then be able to evaluate whether the exemption's contours should be adjusted.

IV. Conclusion

24. For the reasons stated above, we find the viewability rule is no longer necessary to ensure must-carry signals are viewable to all subscribers and therefore will allow the rule to sunset. As an interim measure, we require hybrid systems to continue to carry the signals of must-carry stations in analog format to all analog cable subscribers for six months after expiration of the viewability rule, until December 12, 2012. We extend for three more years the existing HD carriage exemption for eligible small cable system operators.

V. Procedural Matters

A. Final Regulatory Flexibility Act Analysis

25. As required by the Regulatory Flexibility Act of 1980, as amended (''RFA'')[127] an Initial Regulatory Flexibility Analysis (''IRFA'') was incorporated in the *Fourth FNPRM* in this proceeding.[128] The Commission sought written public comment on the proposals in the *Fourth FNPRM,* including comment on the IRFA. The Commission received no comments on the IRFA. This present Final Regulatory Flexibility Analysis (''FRFA'') conforms to the RFA.[129]

1. Need for, and Objectives of, the *Fifth Report & Order*

26. *Viewability Requirement.* Sections 614(b)(7) and 615(h) of the Communications Act require cable operators to ensure that commercial and non-commercial must-carry broadcast stations are ''viewable'' or ''available'' to all cable subscribers. 47 U.S.C. 534(b)(7), 535(h). In the 2007 *Viewability Order,* in anticipation of the approaching end of the digital television transition and in light of the state of technology and the marketplace, the Commission adopted a rule providing cable operators operating hybrid systems (*i.e.,* cable systems that provide both digital and analog cable service) two options to comply with the statutory viewability requirement: (1) Carry the digital signal in analog format to all analog cable subscribers in addition to any digital version carried, or (2) transition to an all-digital system and carry the signal only in digital format, provided that all subscribers have the necessary equipment to view the broadcast content. Thus, the ''viewability'' rule required cable operators with hybrid systems to carry digital must-carry signals in both digital and analog format. The Commission, however, decided that the rule would remain in force for three years after the date of the digital transition, subject to review by the Commission during the last year of the three-year period. The Commission explained that a three-year sunset ''provides the Commission with the opportunity after the transition to review these rules in light of the potential cost and service disruption to consumers, and the state of technology and the marketplace.'' Therefore, absent Commission action, the viewability rule is scheduled to sunset on June 12, 2012. The *Fourth FNPRM* considered whether to retain the viewability rule or allow it to sunset, given the current state of technology and the marketplace.

27. The *Fifth Report and Order* finds it in the public interest to allow the viewability rule to sunset as scheduled, on June 12, 2012. The *Fifth Report and Order* determines that the statutory term ''viewable'' is an ambiguous term. It then chooses a reasonable interpretation of the statutory text that best effectuates the statutory purpose in light of current marketplace conditions and technology developments that have occurred over the past five years (*e.g.,* 80% of cable customers now subscribe to digital cable service and the widespread availability of small digital set-top boxes that cable operators are making available at low cost (or no cost) to analog customers of hybrid systems). The *Fifth Report and Order* reinterprets the statutory viewability requirement to permit cable operators to require the use of set-top equipment to view must-carry signals, provided that such equipment is both available and affordable (or provided at no cost). Therefore, until it completes its transition to all-digital service, a hybrid system operator may comply with the statutory viewability requirement in two ways. The operator can carry a must-carry signal in a format that is capable of being viewed by analog customers either (1) without the use of additional equipment or (2) alternatively with equipment made available by the cable operator at no cost or at an affordable cost that does not substantially deter use of the equipment. The *Fifth Report and Order* establishes a transitional period of six months after expiration of the current rule—that is, until December 12, 2012—during which hybrid systems will be required to continue to carry the signals of must-carry stations in analog format to all analog cable subscribers. This post-sunset transitional period will give consumers, cable operators, and broadcasters that rely on must-carry access an opportunity to prepare for the widespread deployment of small, affordable set-top boxes and to take other necessary steps resulting from changes in cable carriage.

28. *HD Carriage Exemption.* Sections 614(b)(4)(A) of the Communications Act requires that cable operators carry broadcast signals ''without material degradation.'' Accordingly, at the same time the Commission adopted the viewability rule, it adopted a related

[122] *See* NAB Comments at 8.

[123] *See* ACA Comments at 16 (exemption ''is limited to only the smallest and most at-risk systems'').

[124] ACA Reply at 6.

[125] *See* ACA Reply at 7.

[126] NAB Comments at 8 (''Congress intended by [Section 614(b)(4)(A) of the Act] to make sure that cable systems did not provide technically advantageous carriage to favored signals, and provide lower quality carriage to others, particularly local television signals.).

[127] *See* 5 U.S.C. 603. The RFA, *see* 5 U.S.C. 601–612, has been amended by the Small Business Regulatory Enforcement Fairness Act of 1996 (''SBREFA''), Public Law 104–121, Title II, 110 Stat. 847 (1996). The SBREFA was enacted as Title II of the Contract With America Advancement Act of 1996 (''CWAAA'').

[128] *See, generally, Fourth FNPRM.*

[129] *See* 5 U.S.C. 604.

rule prohibiting material degradation of broadcast signals when carried by cable systems. The rule requires that any signal broadcast in HD be carried by cable operators in HD. In response to concerns from small cable operators about cost and technical capacity, the 2008 Fourth Report & Order afforded a temporary exemption from this HD carriage requirement (''HD carriage exemption'') for certain small systems. Specifically, the Commission exempted small cable systems with 2,500 or fewer subscribers that are not affiliated with a cable operator serving more than 10 percent of all MVPD subscribers, and those with an activated channel capacity of 552 MHz or less. The exemption from the material degradation rules allows such systems to carry broadcast signals in standard definition (SD) digital and/or analog format, even if the signals are broadcast in HD, as long as all subscribers can receive and view the signal. The Commission, however, decided that the HD carriage exemption would remain in force for three years after the date of the digital transition, subject to review by the Commission during the last year of the three-year period. Therefore, absent Commission action, the HD carriage exemption is scheduled to sunset on June 12, 2012. The *Fourth FNPRM* considered whether to retain the HD carriage exemption or allow it to expire.

29. The *Fifth Report and Order* concludes that the small-system HD carriage exemption continues to serve the public interest and adopts the *Fourth FNPRM's* tentative conclusion to extend the existing exemption for three more years. The *Fifth Report and Order* finds that a significant number of small systems with financial or channel capacity constraints continue to rely on the HD carriage exemption and require additional time to come into compliance with the material degradation rules in a cost-effective way. Accordingly, the HD carriage exemption will sunset on June 12, 2015, unless the Commission takes action to extend it in light of the potential cost and service disruption to consumers and the state of technology and the market at that time.

2. Summary of Significant Issues Raised by Public Comments in Response to the IRFA

30. The Commission did not receive any comments in response to the IRFA.

3. Description and Estimate of the Number of Small Entities To Which Rules Will Apply

31. The RFA directs the Commission to provide a description of and, where feasible, an estimate of the number of small entities that will be affected by the rules adopted.[130] The RFA generally defines the term ''small entity'' as having the same meaning as the terms ''small business,'' ''small organization,'' and ''small governmental jurisdiction'' [131] In addition, the term ''small business'' has the same meaning as the term ''small business concern'' under the Small Business Act.[132] A ''small business concern'' is one which: (1) Is independently owned and operated; (2) is not dominant in its field of operation; and (3) satisfies any additional criteria established by the Small Business Administration (SBA).[133] The final rules adopted herein affect small television broadcast stations and small cable operators. A description of these small entities, as well as an estimate of the number of such small entities, is provided below.

32. *Television Broadcasting.* The SBA defines a television broadcasting station as a small business if such station has no more than $14.0 million in annual receipts.[134] Business concerns included in this industry are those ''primarily engaged in broadcasting images together with sound.'' [135] The Commission has estimated the number of licensed commercial television stations to be 1,387.[136] According to Commission staff review of the BIA Kelsey Inc. Media Access Pro Television Database (BIA) as of January 31, 2011, 1,006 (or about 78 percent) of an estimated 1,298 commercial television stations [137] in the United States have revenues of $14 million or less and, thus, qualify as small entities under the SBA definition. The Commission has estimated the number of licensed noncommercial educational (''NCE'') television stations to be 396.[138] We note, however, that, in assessing whether a business concern qualifies as small under the above definition, business (control) affiliations [139] must be included. Our estimate, therefore, likely overstates the number of small entities that might be affected by our action, because the revenue figure on which it is based does not include or aggregate revenues from affiliated companies. The Commission does not compile and otherwise does not have access to information on the revenue of NCE stations that would permit it to determine how many such stations would qualify as small entities.

33. In addition, an element of the definition of ''small business'' is that the entity not be dominant in its field of operation. We are unable at this time to define or quantify the criteria that would establish whether a specific television station is dominant in its field of operation. Accordingly, the estimate of small businesses to which rules may apply do not exclude any television station from the definition of a small business on this basis and are therefore over-inclusive to that extent. Also, as noted, an additional element of the definition of ''small business'' is that the entity must be independently owned and operated. We note that it is difficult at times to assess these criteria in the context of media entities and our estimates of small businesses to which they apply may be over-inclusive to this extent.

34. *Cable and Other Program Distribution.* Since 2007, these services have been defined within the broad economic census category of Wired Telecommunications Carriers; that category is defined as follows: ''This industry comprises establishments primarily engaged in operating and/or providing access to transmission facilities and infrastructure that they own and/or lease for the transmission of voice, data, text, sound, and video using

[130] 5 U.S.C. 603(b)(3).

[131] 5 U.S.C. 601(b).

[132] 5 U.S.C. 601(3) (incorporating by reference the definition of ''small-business concern'' in the Small Business Act, 15 U.S.C. 632). Pursuant to 5 U.S.C. 601(3), the statutory definition of a small business applies ''unless an agency, after consultation with the Office of Advocacy of the Small Business Administration and after opportunity for public comment, establishes one or more definitions of such term which are appropriate to the activities of the agency and publishes such definition(s) in the **Federal Register**.''

[133] 15 U.S.C. 632.

[134] *See* 13 CFR 121.201, NAICS Code 515120 (2007).

[135] *Id.* This category description continues, ''These establishments operate television broadcasting studios and facilities for the programming and transmission of programs to the public. These establishments also produce or transmit visual programming to affiliated broadcast television stations, which in turn broadcast the programs to the public on a predetermined schedule. Programming may originate in their own studios, from an affiliated network, or from external sources.'' Separate census categories pertain to businesses primarily engaged in producing programming. *See* Motion Picture and Video Production, NAICS code 512110; Motion Picture and Video Distribution, NAICS Code 512120; Teleproduction and Other Post-Production Services, NAICS Code 512191; and Other Motion Picture and Video Industries, NAICS Code 512199.

[136] *See* News Release, ''Broadcast Station Totals as of March 31, 2012,'' 2012 WL 1243354 (F.C.C.) (dated Apr. 12, 2012) (''*Broadcast Station Totals*''); also available at *http://transition.fcc.gov/Daily_Releases/Daily_Business/2012/db0412/DOC-313533A1.pdf.*

[137] We recognize that this total differs slightly from that contained in *Broadcast Station Totals, supra,* note 11; however, we are using BIA's estimate for purposes of this revenue comparison.

[138] *See Broadcast Station Totals, supra,* note 11.

[139] ''[Business concerns] are affiliates of each other when one concern controls or has the power to control the other or a third party or parties controls or has to power to control both.'' 13 CFR 121.103(a)(1).

wired telecommunications networks. Transmission facilities may be based on a single technology or a combination of technologies.'' [140] The SBA has developed a small business size standard for this category, which is: all such firms having 1,500 or fewer employees.[141] According to Census Bureau data for 2007, there were a total of 955 firms in the subcategory of Cable and Other Program Distribution that operated for the entire year.[142] Of this total, 939 firms had employment of 999 or fewer employees, and 16 firms had employment of 1,000 employees or more.[143] Thus, under this size standard, the Commission believes that a majority of firms operating in this industry can be considered small.

35. *Cable Companies and Systems (Rate Regulation Standard).* The Commission has also developed its own small business size standards, for the purpose of cable rate regulation. Under the Commission's rules, a ''small cable company'' is one serving 400,000 or fewer subscribers, nationwide.[144] Industry data indicate that, of 1,076 cable operators nationwide, all but 11 are small under this size standard.[145] In addition, under the Commission's rules, a ''small system'' is a cable system serving 15,000 or fewer subscribers.[146] Industry data indicate that, of 6,635 systems nationwide, 5,802 systems have under 10,000 subscribers, and an additional 302 systems have 10,000–19,999 subscribers.[147] Thus, under this second size standard, the Commission believes that most cable systems are small.

36. *Cable System Operators.* The Act also contains a size standard for small cable system operators, which is ''a cable operator that, directly or through an affiliate, serves in the aggregate fewer than 1 percent of all subscribers in the United States and is not affiliated with any entity or entities whose gross annual revenues in the aggregate exceed $250,000,000.'' [148] The Commission has determined that an operator serving fewer than 677,000 subscribers shall be deemed a small operator, if its annual revenues, when combined with the total annual revenues of all its affiliates, do not exceed $250 million in the aggregate.[149] Industry data indicate that, of 1,076 cable operators nationwide, all but 10 are small under this size standard.[150] We note that the Commission neither requests nor collects information on whether cable system operators are affiliated with entities whose gross annual revenues exceed $250 million,[151] and therefore we are unable to estimate more accurately the number of cable system operators that would qualify as small under this size standard.

37. *Open Video Services.* Open Video Service (OVS) systems provide subscription services.[152] The open video system (''OVS'') framework was established in 1996, and is one of four statutorily recognized options for the provision of video programming services by local exchange carriers.[153] The OVS framework provides opportunities for the distribution of video programming other than through cable systems. Because OVS operators provide subscription services,[154] OVS falls within the SBA small business size standard covering cable services, which is ''Wired Telecommunications Carriers.'' [155] The SBA has developed a small business size standard for this category, which is: all such firms having 1,500 or fewer employees. According to Census Bureau data for 2007, there were a total of 3,188 firms in this previous category that operated for the entire year.[156] Of this total, 3,144 firms had employment of 999 or fewer employees, and 44 firms had employment of 1,000 employees or more.[157] Thus, under this size standard, most cable systems are small. In addition, we note that the Commission has certified some OVS operators, with some now providing service.[158] Broadband service providers (''BSPs'') are currently the only significant holders of OVS certifications or local OVS franchises.[159] The Commission does not have financial or employment information regarding the entities authorized to provide OVS, some of which may not yet be operational. Thus, again, at least some of the OVS operators may qualify as small entities.

4. Description of Reporting, Record Keeping, and Other Compliance Requirements for Small Entities

38. This *Fifth Report & Order* does not impose any reporting, record keeping, or other compliance requirements.

5. Steps Taken To Minimize Significant Economic Impact on Small Entities, and Significant Alternatives Considered

39. The RFA requires an agency to describe any significant alternatives that it has considered in reaching its approach, which may include the following four alternatives (among others): (1) The establishment of differing compliance or reporting requirements or timetables that take into account the resources available to small entities; (2) the clarification, consolidation, or simplification of compliance or reporting requirements under the rule for small entities; (3) the use of performance, rather than design, standards; and (4) an exemption from coverage of the rule, or any part thereof, for small entities.[160]

40. *Viewability Requirement.* In this *Fifth Report & Order,* the Commission

[140] U.S. Census Bureau, 2007 NAICS Definitions, ''517110 Wired Telecommunications Carriers'' (partial definition), *http://www.census.gov/naics/2007/def/ND517110.HTM#N517110.*

[141] 13 CFR 121.201, NAICS code 517110 (2007).

[142] U.S. Census Bureau, 2007 Economic Census, Subject Series: Information, Table 5, Employment Size of Firms for the United States: 2007, NAICS code 5171102 (located at *http://factfinder.census.gov/servlet/IBQTable?_bm=y&-geo_id=&-_skip=600&-ds_name=EC0751SSSZ5&-_lang=en*).

[143] *See id.*

[144] 47 CFR 76.901(e). The Commission determined that this size standard equates approximately to a size standard of $100 million or less in annual revenues. Sixth Report and Order and Eleventh Order on Reconsideration, FCC 95–196, 60 FR 35854, July 12, 1995.

[145] These data are derived from: R.R. Bowker, *Broadcasting & Cable Yearbook 2006,* ''Top 25 Cable/Satellite Operators,'' pages A–8 and C–2 (data current as of June 30, 2005); Warren Communications News, *Television & Cable Factbook 2006,* ''Ownership of Cable Systems in the United States,'' pages D–1805 to D–1857.

[146] 47 CFR 76.901(c).

[147] Warren Communications News, *Television & Cable Factbook 2008,* ''U.S. Cable Systems by Subscriber Size,'' page F–2 (data current as of Oct. 2007). The data do not include 851 systems for which classifying data were not available.

[148] 47 U.S.C. 543(m)(2); *see also* 47 CFR 76.901(f) and nn.1–3.

[149] 47 CFR 76.901(f); *see FCC Announces New Subscriber Count for the Definition of Small Cable Operator,* Public Notice, DA 01–158 (CSB, rel. Jan. 24, 2001).

[150] These data are derived from R.R. Bowker, *Broadcasting & Cable Yearbook 2006,* ''Top 25 Cable/Satellite Operators,'' pages A–8 and C–2 (data current as of June 30, 2005); Warren Communications News, T*elevision & Cable Factbook 2006,* ''Ownership of Cable Systems in the United States,'' pages D–1805 to D–1857.

[151] The Commission does receive such information on a case-by-case basis if a cable operator appeals a local franchise authority's finding that the operator does not qualify as a small cable operator pursuant to § 76.901(f) of the Commission's rules.

[152] *See* 47 U.S.C. 573.

[153] 47 U.S.C. 571(a)(3) through (4).

[154] *See* 47 U.S.C. 573.

[155] U.S. Census Bureau, 2007 NAICS Definitions, ''517110 Wired Telecommunications Carriers''; *http://www.census.gov/naics/2007/def/ND517110.HTM#N517110.*

[156] U.S. Census Bureau, 2007 Economic Census, Subject Series: Information, Table 5, Employment Size of Firms for the United States: 2007, NAICS code 5171102 (issued Nov. 2010).

[157] *See id.*

[158] A list of OVS certifications may be found at *http://www.fcc.gov/mb/ovs/csovscer.html.*

[159] *See Thirteenth Annual Cable Competition Report,* FCC 07–206, at para. 135 (rel. Jan. 16, 2009). BSPs are newer firms that are building state-of-the-art, facilities-based networks to provide video, voice, and data services over a single network.

[160] 5 U.S.C. 603(c)(1) through (c)(4).

allows the viewability rule to expire, subject to a six-month post-sunset transition period (as described above in Section A of this FRFA), and revises its interpretation of the statutory viewability requirement to afford greater flexibility to cable operators, including small operators, for complying with the statute. Specifically, whereas hybrid cable operators were previously required to carry both the digital and analog versions of a must-carry broadcast station, hybrid operators may, instead, comply with the statute by carrying only the digital format and making set-top equipment available to their analog cable customers, at no cost or at an affordable cost that does not substantially deter use of the equipment, that will enable such customers to view the digital format. As a result, small hybrid cable system operators will have a choice for complying with the statutory viewability requirement. In addition, we do not believe the expiration of the viewability rule will have a significant impact on small broadcasters. We believe our new statutory interpretation of the viewability requirement—which hinges on a cable operator making equipment available at no cost or an affordable cost—will ensure that subscribers on hybrid systems may continue to access these signals at little or no additional expense, thereby mitigating any adverse impact on broadcasters. We note that a must-carry signal carried only in digital format will still be included in the basic service tier; analog cable subscribers would not be required to subscribe to an enhanced tier of service to view the digital version of a must-carry channel. We also expect this issue to diminish over time given that the number of analog cable subscribers is expected to continue to decrease as more cable customers choose to upgrade to full digital service and as more hybrid cable systems complete their transition to all-digital systems.

41. *HD Carriage Exemption.* The HD carriage exemption provides temporary regulatory relief to small cable systems with 2,500 or fewer subscribers that are not affiliated with a cable operator serving more than 10 percent of all MVPD subscribers, and those with an activated channel capacity of 552 MHz or less). This *Fifth Report & Order* extends this exemption for three more years. As noted in the IRFA, the HD carriage exemption does not impose a negative economic impact on any small cable operator, and, indeed, provides a positive economic impact to any operator of a system that chooses to take advantage of the exemption. In addition, the exemption does not impose any significant burdens on small television stations.

6. Report to Congress

42. The Commission will send a copy of this *Fifth Report & Order,* including this FRFA, in a report to be sent to Congress pursuant to the SBREFA.[161] In addition, the Commission will send a copy of this *Fifth Report & Order,* including the FRFA, to the Chief Counsel for Advocacy of the SBA. A copy of this *Fifth Report & Order* and the FRFA (or summaries thereof) will also be published in the **Federal Register**.[162]

B. Final Paperwork Reduction Act of 1995 Analysis

43. This Report and Order has been analyzed with respect to the Paperwork Reduction Act of 1995 (''PRA''),[163] and does not contain any new or modified information collection requirements. In addition, therefore, it does not contain any new or modified ''information collection burden for small business concerns with fewer than 25 employees,'' pursuant to the Small Business Paperwork Relief Act of 2002.[164]

C. Congressional Review Act

44. The Commission will send a copy of this Report and Order in a report to be sent to Congress and the Government Accountability Office, pursuant to the Congressional Review Act.[165]

D. Additional Information

45. For more information on this proceeding, contact Steven Broeckaert, *Steven.Broeckaert@fcc.gov,* or Evan Baranoff, *Evan.Baranoff@fcc.gov,* of the Media Bureau, Policy Division, (202) 418–2120.

Ordering Clauses

46. Accordingly, *it is ordered* that pursuant to sections 4, 303, 614, and 615 of the Communications Act of 1934, as amended, 47 U.S.C. 154, 303, 534, and 535, the *Fifth Report and Order is adopted,* and the Commission's rules *are hereby amended* by removing § 76.56(d)(3) through (d)(5), as set forth in the final rule changes in Appendix B of the *Fifth Report and Order.*

47. *It is further ordered* that, pursuant to 5 U.S.C. 553(d)(3) and 47 CFR 1.427(b), the *Fifth Report and Order* and the attached rule amendment *shall be effective* immediately upon publication in the **Federal Register**.[166]

48. *It is further ordered* that, pursuant to the Congressional Review Act, 5 U.S.C. 801(a)(1)(A), the Commission *will send* a copy of the *Fifth Report and Order* in a report to Congress and the General Accounting Office.

49. *It is further ordered* that the Commission's Consumer and Governmental Affairs Bureau, Reference Information Center, *will send* a copy of the *Fifth Report and Order,* including the Final Regulatory Flexibility Analysis, to the Chief Counsel for Advocacy of the Small Business Administration.

List of Subjects in 47 CFR Part 76

Cable television.

Federal Communications Commission.

Marlene H. Dortch,

Secretary.

For the reasons discussed in the preamble, the Federal Communications Commission amends 47 CFR part 76 as follows:

PART 76—MULTICHANNEL VIDEO AND CABLE TELEVISION SERVICE

■ 1. The authority citation for part 76 continues to read as follows:

Authority: 47 U.S.C. 151, 152, 153, 154, 301, 302, 302a, 303, 303a, 307, 308, 309, 312, 315, 317, 325, 339, 340, 341, 503, 521, 522, 531, 532, 534, 535, 536, 537, 543, 544, 544a, 545, 548, 549, 552, 554, 556, 558, 560, 561, 571, 572, 573.

[161] *See id.* section 801(a)(1)(A).

[162] *See id.* section 604(b).

[163] The Paperwork Reduction Act of 1995 (''PRA''), Pub. L. No. 104–13, 109 Stat 163 (1995) (codified in Chapter 35 of title 44 U.S.C.).

[164] The Small Business Paperwork Relief Act of 2002 (''SBPRA''), Public Law 107–198, 116 Stat 729 (2002) (codified in Chapter 35 of title 44 U.S.C.); *see* 44 U.S.C. 3506(c)(4).

[165] *See* 5 U.S.C. 801(a)(1)(A).

[166] *See* 5 U.S.C. 553(d)(3) (''The required publication or service of a substantive rule shall be made not less than 30 days before its effective date, except * * * as otherwise provided by the agency for good cause found and published with the rule.''); *see also* 47 CFR 1.103(a), 1.427(b). Section 76.56(d)(5) provides that the viewability requirements set forth in § 76.56(d)(3) will expire three years from the date on which all full-power television stations cease broadcasting analog signals (June 12, 2012) unless the Commission extends the requirement. *See* 47 CFR 76.56(d)(5). The HD exemption for small cable operators will expire on June 12, 2012, unless the Commission extends the exemption. We thus find good cause to make these rule changes effective upon publication in the **Federal Register**. The sunset of the viewability requirement is contemplated in the original rule. The transition period adopted herein will preserve the status quo for six months, and not impose any new requirements on any entity. Similarly, extension of the HD exemption provides relief to small cable systems and will not impose any new requirements on any entity. Accordingly, no entity will be harmed as a result of our decision to make these rule changes effective upon publication in the **Federal Register**.

§ 76.56 [Amended]

■ 2. In § 76.56, remove paragraphs (d)(3) through (d)(5).

[FR Doc. 2012–14816 Filed 6–15–12; 8:45 am]

BILLING CODE 6712–01–P

DEPARTMENT OF COMMERCE

National Oceanic and Atmospheric Administration

50 CFR Part 660

[Docket No. 120403254–2135–02]

RIN 0648–XB045

Fisheries Off West Coast States; Coastal Pelagic Species Fisheries; Annual Specifications

AGENCY: National Marine Fisheries Service (NMFS), National Oceanic and Atmospheric Administration (NOAA), Commerce.

ACTION: Final rule.

SUMMARY: NMFS issues this final rule to implement the annual catch limit (ACL), harvest guideline (HG), annual catch target (ACT) and associated annual reference points for Pacific mackerel in the U.S. exclusive economic zone (EEZ) off the Pacific coast for the fishing year season of July 1, 2011, through June 30, 2012. NMFS establishes the ACL, HG, and ACT under the regulations implementing the Coastal Pelagic Species (CPS) Fishery Management Plan (FMP) for Pacific mackerel off the Pacific coast. The ACL (or maximum HG) for the 2011–2012 Pacific mackerel fishing year is 40,514 metric tons (mt). The ACT, which will be the directed fishery harvest target, is 30,386 mt. If the fishery attains the ACT, the directed fishery will close, reserving the difference between the ACL and ACT (which is 10,128 mt) as a set-aside for incidental landings in other CPS fisheries. This final rule is intended to conserve and manage the Pacific mackerel stock off the U.S. West Coast.

DATES: Effective June 18, 2012, through June 30, 2012.

FOR FURTHER INFORMATION CONTACT: Joshua Lindsay, Southwest Region, NMFS, (562) 980–4034.

SUPPLEMENTARY INFORMATION: During annual public meetings, the NMFS Southwest Fisheries Science Center presents the estimated biomass for Pacific mackerel to the Pacific Fishery Management Council's (Council) CPS Management Team (Team), the Council's CPS Advisory Subpanel (Subpanel) and the Council's Scientific and Statistical Committee (SSC), and the biomass and the status of the fisheries are reviewed and discussed. The SSC (and the other teams) then present the estimated biomass to the Council along with the calculated overfishing limit (OFL), available biological catch (ABC), ACL and ACT (and/or HG) recommendations, and the Council listens to comments from the Team, Subpanel and SSC. Following review by the Council and after considering public comment, the Council adopts a biomass estimate and makes its catch level recommendations to NMFS.

This final rule will implement the 2011–2012 Pacific mackerel fishery ACL, HG, ACT and other annual catch reference points, including OFL and an ABC that takes into consideration uncertainty surrounding the current estimate of biomass, for Pacific mackerel in the U.S. EEZ off the Pacific coast. (The EEZ off the Pacific Coast encompasses ocean waters seaward of the outer boundary of state waters, which is 3 nautical miles off the coast, out to a line 200 nautical miles from the coast.) The CPS FMP and its implementing regulations require NMFS to set these annual catch levels for the Pacific mackerel fishery based on the annual specification framework in the FMP. This framework includes a harvest control rule that determines the maximum HG, the primary management target for the fishery, for the current fishing season. The HG is based, in large part, on the current estimate of stock biomass. The harvest control rule in the CPS FMP is HG = [(Biomass-Cutoff) * Fraction * Distribution] with the parameters described as follows:

1. *Biomass.* The estimated stock biomass of Pacific mackerel for the 2011–2012 management season is 211,126 mt.

2. *Cutoff.* This is the biomass level below which no commercial fishery is allowed. The FMP established this level at 18,200 mt.

3. *Fraction.* The harvest fraction (30%) is the percentage of the biomass above 18,200 mt that may be harvested.

4. *Distribution.* The average portion (currently 70%) of the total Pacific mackerel biomass that is estimated to be in the U.S. EEZ off the Pacific coast, based on the average historical larval distribution obtained from scientific cruises and the distribution of the resource according to the logbooks of aerial fish-spotters.

At the June 2011 Council meeting, the Council adopted the 2011–12 Pacific mackerel assessment and a Pacific mackerel biomass estimate of 211,126 mt. Based on recommendations from its SSC and other advisory bodies, the Council recommended, and NMFS is implementing, an OFL of 44,336 mt, an ABC of 42,375 mt, an ACL and maximum harvest guideline (HG) of 40,514 mt, and an ACT of 30,386 mt for the 2011/2012 Pacific mackerel fishing year. These catch specifications are based on the most recent stock assessment and the control rules established in the CPS FMP.

As of April 2012 the fishery had landed 1,120 mt of Pacific mackerel which is less than 2% of the current ACL. Although it is highly unlikely that the ACL will be reached, if the ACT is attained, the directed fishery will close, and the difference between the ACL and ACT (10,128 mt) will be reserved as a set-aside for incidental landings in other CPS fisheries and for other sources of mortality. In that event, for the remainder of the fishing year incidental harvest measures will be in place, including a 45% incidental catch allowance when Pacific mackerel are landed with other CPS (in other words, no more than 45% by weight of the CPS landed per trip may be Pacific mackerel), except that up to 1 mt of Pacific mackerel could be landed without landing any other CPS. Upon the fishery attaining the ACL/HG (40,514 mt), no vessels in CPS fisheries may retain Pacific mackerel. The purpose of the incidental set-aside and allowance of an incidental fishery is to allow for the restricted incidental landings of Pacific mackerel in other fisheries, particularly other CPS fisheries, when the directed fishery is closed to reduce bycatch and allow for continued prosecution of other important CPS fisheries. The NMFS Southwest Regional Administrator will publish a notice in the **Federal Register** announcing the date of any closure to either directed or incidental fishing.

On April 12, 2012, NMFS published a proposed rule for this action and solicited public comments (77 FR 21958). No comments were received. For further background information on this action please refer to the preamble of the proposed rule (77 FR 21958, April 12, 2012).

Classification

Pursuant to section 304(b)(1)(A) of the Magnuson-Stevens Fishery Conservation and Management Act, the NMFS Assistant Administrator has determined that this final rule is consistent with the CPS FMP, other provisions of the Magnuson-Stevens Fishery Conservation and Management Act, and other applicable laws.

NMFS finds good cause pursuant to 5 U.S.C. 553(d)(3) to waive the 30-day delay in effectiveness for the establishment of the harvest

specifications for the 2011–2012 Pacific mackerel fishing season. Making this rule effective immediately upon publication is necessary to ensure the provisions of the CPS FMP for the conservation and management of Pacific mackerel are implemented this fishing year. Making this rule effective 30 days after publication would cause confusion among regulated parties and to the public because the specifications would not be in place during the relevant fishing year in which they apply. As such, the delay would undermine the very intention of this rulemaking.

This final rule is exempt from review under Executive Order 12866.

The Chief Counsel for Regulation of the Department of Commerce certified to the Chief Counsel for Advocacy of the Small Business Administration during the proposed rule stage that this action would not have significant economic impact on a substantial number of small entities. The factual basis for the certification was published in the proposed rule and is not repeated here. No comments were received regarding this certification. As a result, a regulatory flexibility analysis was not required and none was prepared.

Authority: 16 U.S.C. 1801 *et seq.*

Dated: June 11, 2012.

Alan D. Risenhoover,

Acting Deputy Assistant Administrator for Regulatory Programs, National Marine Fisheries Service.

[FR Doc. 2012–14586 Filed 6–15–12; 8:45 am]

BILLING CODE 3510–22–P

Proposed Rules

Federal Register
Vol. 77, No. 117
Monday, June 18, 2012

This section of the FEDERAL REGISTER contains notices to the public of the proposed issuance of rules and regulations. The purpose of these notices is to give interested persons an opportunity to participate in the rule making prior to the adoption of the final rules.

FEDERAL DEPOSIT INSURANCE CORPORATION

12 CFR Part 380

RIN 3064–AD73

Definition of ''Predominantly Engaged in Activities That Are Financial in Nature or Incidental Thereto''

AGENCY: Federal Deposit Insurance Corporation.

ACTION: Supplemental notice of proposed rulemaking and request for comment.

SUMMARY: The Federal Deposit Insurance Corporation (''FDIC'') is amending the definition of ''financial activities'' set forth in section 380.8 of the FDIC's notice of proposed rulemaking published in the **Federal Register** on March 23, 2011 titled ''Orderly Liquidation Authority'' (''March 2011 NPR'').[1] The March 2011 NPR proposed standards for determining if a company is predominantly engaged in financial activities for purposes of Title II of the Dodd-Frank Wall Street Reform and Consumer Protection Act (''Dodd-Frank Act'' or ''Act'').[2] A company that is predominantly engaged in such activities is a ''financial company'' for purposes of Title II of the Act (unless it is one of the few entities specifically excepted). Provisions of the March 2011 NPR other than section 380.8 already have been finalized. Based on a number of factors described within this notice of proposed rulemaking (''NPR''), the FDIC believes that it is necessary to clarify the scope of the activities that would be considered to be financial activities. Accordingly, this NPR amends section 380.8 of the March 2011 NPR to clarify the activities that would be considered to be financial activities for purposes of determining if a company is predominantly engaged in such activities under Title II of the Act.

DATES: Comments should be received on or before August 17, 2012.

ADDRESSES: You may submit comments by any of the following methods:

- *Federal eRulemaking Portal: http://www.regulations.gov.* Follow the instructions for submitting comments.
- *Agency Web site: http://www.FDIC.gov/regulations/laws/federal/propose.html*
- *Mail:* Robert E. Feldman, Executive Secretary, Attention: Comments/Legal ESS, Federal Deposit Insurance Corporation, 550 17th Street NW., Washington, DC 20429.
- *Hand Delivered/Courier:* The guard station at the rear of the 550 17th Street Building (located on F Street), on business days between 7:00 a.m. and 5:00 p.m.
- *Email: comments@FDIC.gov.*

Instructions: Comments submitted must include ''FDIC'' and ''RIN 3064–AD73.'' Comments received will be posted without change to *http://www.FDIC.gov/regulations/laws/federal/propose.html*, including any personal information provided.

FOR FURTHER INFORMATION CONTACT: Ryan K. Clougherty, Senior Attorney, (202) 898–3843; or Robert C. Fick, Supervisory Counsel, (202) 898–8962, Legal Division, Federal Deposit Insurance Corporation, 550 17th Street NW., Washington, DC 20429.

SUPPLEMENTARY INFORMATION:

I. Background

Title II of the Dodd-Frank Act (''Title II'') provides for the appointment of the FDIC as receiver of a covered financial company following the prescribed recommendation, determination, and, if applicable, judicial review process set forth in the Act. Title II outlines the process for the orderly liquidation of such a covered financial company following the FDIC's appointment as receiver. The March 2011 NPR was intended to provide clarity and certainty with respect to how key components of the orderly liquidation authority will be implemented and to ensure that the liquidation process under Title II reflects the Act's mandate of transparency in the liquidation of covered financial companies. Provisions of the March 2011 NPR other than section 380.8 were adopted in a Final Rule published in the **Federal Register** on July 15, 2011.[3]

Section 201(a)(11) of the Act defines ''financial company,'' for purposes of Title II, as any company incorporated or organized under any provision of Federal law or the laws of any State that is: (a) a bank holding company, as defined in section 2(a) of the Bank Holding Company Act of 1956 (''BHC Act'');[4] (b) a nonbank financial company supervised by the Board of Governors of the Federal Reserve System (''Board of Governors''); (c) any company that is predominantly engaged in activities that the Board of Governors has determined are financial in nature or incidental thereto for purposes of section 4(k) of the BHC Act;[5] or (d) any subsidiary of any of the aforementioned companies that is predominantly engaged in activities that the Board of Governors has determined are financial in nature or incidental thereto for purposes of section 4(k) of the BHC Act, other than a subsidiary that is an insured depository institution or insurance company.[6]

Section 201(b) of the Act provides that, for the purposes of defining the term ''financial company'' under section 201(a)(11), ''[n]o company shall be deemed to be predominantly engaged in activities that the Board of Governors has determined are financial in nature or incidental thereto for purposes of section 4(k) of the [BHC Act], if the consolidated revenues of such company from such activities constitute less than 85 percent of the total consolidated revenues of such company, as the Corporation, in consultation with the Secretary [of the Treasury], shall establish by regulation. In determining whether a company is a financial company under [Title II], the consolidated revenues derived from the ownership or control of a depository institution shall be included.'' A company that is predominantly engaged in such activities is a ''financial

[1] 76 FR 16324 (March 23, 2011).

[2] Dodd-Frank Wall Street Reform and Consumer Protection Act, Public Law 111–203, 124 Stat. 1376 (2010).

[3] 76 FR 41626 (July 15, 2011).

[4] 12 U.S.C. 1841(a).

[5] 12 U.S.C. 1843(k).

[6] Section 201(a)(11) also provides that ''financial company'' does not include Farm Credit System institutions chartered under and subject to the provisions of the Farm Credit Act of 1971, as amended (12 U.S.C. 2001 *et seq.*), or governmental or regulated entities as defined under section 1303(20) of the Federal Housing Enterprises Financial Safety and Soundness Act of 1992 (12 U.S.C. 4502(20)).

company'' under Title II (unless it is one of the few entities specifically excepted).

Section 380.8 as proposed in the March 2011 NPR (''section 380.8'') set forth the criteria for determining if a company is predominantly engaged in financial activities for the purposes of Title II. Specifically, proposed section 380.8 provided that a company is predominantly engaged in financial activities if: (a) at least 85 percent of the total consolidated revenues of the company for either of its two most recent fiscal years were derived, directly or indirectly, from financial activities, or (b) based upon all the relevant facts and circumstances, the FDIC determines that the consolidated revenues of the company from financial activities constitute 85 percent or more of the total consolidated revenues of the company. The public comment period on the March 2011 NPR closed on May 23, 2011.

Just prior to the FDIC's publication of the March 2011 NPR, the Board of Governors published a notice of proposed rulemaking titled ''Definitions of 'Predominantly Engaged in Financial Activities' and 'Significant' Nonbank Financial Company and Bank Holding Company'' (''Board of Governors' NPR'').[7] The Board of Governors' NPR proposed criteria for determining whether a company is ''predominantly engaged in financial activities'' for purposes of determining if the company is a nonbank financial company under Title I of the Act.[8]

The Title I definition of ''predominantly engaged in financial activities'' is based upon activities that are ''financial in nature'' as defined in section 4(k) of the BHC Act. Similarly, the criteria for determining under Title II whether a company (other than a bank holding company or a nonbank financial company supervised by the Board of Governors) is predominantly engaged in financial activities is primarily based upon activities that the Board of Governors has determined are ''financial in nature'' under section 4(k) of the BHC Act. As a result of these commonalities, the FDIC coordinated closely with the Board of Governors on the proposed criteria set forth in section 380.8 in the March 2011 NPR.[9]

Thereafter, the Board of Governors published a supplemental notice of proposed rulemaking that would amend the definition of financial activities set forth in the Board of Governors' NPR (''Board of Governors' Amended NPR'').[10] The Board of Governors' Amended NPR was published in response to a number of comments the Board of Governors received that raised questions as to whether the conduct of certain financial activities in a manner that did not comply with the conditions applicable to the conduct of such activities by bank holding companies should be considered to be financial activities under Title I of the Dodd-Frank Act.

As discussed in the Board of Governors' Amended NPR, section 4(k) of the BHC Act (''section 4(k)'') and the Board of Governors' Regulation Y (''Regulation Y'')[11] contain a broad list of financial activities and impose conditions on bank holding companies conducting those activities. Many of the conditions contained within section 4(k) and Regulation Y are intended to permit bank holding companies to engage in certain financial activities without threatening the safety and soundness of subsidiary depository institutions. Similarly, other conditions are intended to prevent financial holding companies from controlling commercial firms or relate to other provisions of law. Such conditions regulate the conduct of bank holding companies or financial holding companies engaged in such activities, but do not define the essential nature of the activity itself. Defining financial activities for purpose of Title I to include all of those conditions likely would enable some companies to be predominantly engaged in financial activities and yet avoid eligibility for supervision by the Board of Governors simply by choosing not to abide by conditions, including those imposed for safety and soundness purposes. For example, one commenter to both the Board of Governors' NPR and the FDIC's March 2011 NPR suggested that a firm that organizes, sponsors, and manages an open-end investment company (including a mutual fund or money market mutual fund) should not be considered to be engaged in a financial activity if the firm owns or controls more than a given percentage of the fund because a financial holding company may not own or control more than that amount of the fund. As a result the Board of Governors' Amended NPR proposes to clarify that any activity described as financial in nature in section 4(k) would be considered to be a financial activity for purposes of Title I of the Act without regard to the conditions and limitations imposed by section 4(k) and Regulation Y on bank holding companies that do not define the activity itself.

Accordingly, the Board of Governors' Amended NPR proposes an appendix, as a supplement to the Board of Governors' NPR, that contains a list of the activities, including conditions that the Board of Governors has determined are necessary to define the activity as financial. The financial activities defined in the Board of Governors' Amended NPR appendix are substantively identical to those in section 4(k), but do not include the conditions and limitations imposed on the conduct of the activity by a bank holding company for reasons such as safety and soundness. The FDIC consulted with the Board of Governors during the development of this NPR. The FDIC also consulted with the U.S. Department of Treasury, as required by section 201(b) of the Act.

II. Overview of Comments

The FDIC received 6 comments relating to section 380.8 in response to the March 2011 NPR. One comment, discussed above, addressed the definition of ''financial activities'' for purposes of Title II. The FDIC intends to provide a complete discussion of the comments submitted regarding section 380.8 after considering the comments received on this NPR. The FDIC invites comments on all aspects of the proposed amendment contained within this NPR.

III. Proposed Rule

As noted above, the Board of Governors' Amended NPR provides a list of the activities that would be considered in determining whether a company is predominantly engaged in financial activities for purposes of Title I. The description of each of the financial activities does not include any conditions or limitations that are imposed on bank holding companies that do not define the essence of the financial activity.

The FDIC agrees with the exclusion of those conditions and limitations that the Board of Governors has excluded and proposes to adopt the same approach in determining which activities are financial activities for purposes of Title

[7] 76 FR 7731 (February 11, 2011).

[8] Under section 113 of the Act, the Financial Stability Oversight Council (''FSOC'') may designate a nonbank financial company for supervision by the Board of Governors if the FSOC determines that material financial distress of the company, or the nature, scope, size, scale, concentration, interconnectedness, or mix of the company's activities, could pose a threat to the financial stability of the United States.

[9] On July 15, 2011, the FDIC issued a final rule that implemented the provisions of the March 2011 NPR except section 380.8. Due to the ongoing coordination efforts between the FDIC and the Board of Governors, the final rule reserved section 380.8. *See* 76 FR 41626 (July 15, 2011).

[10] 77 FR 21494 (April 10, 2012).

[11] 12 CFR Part 225.

II. The FDIC believes that it is important for several reasons that ''financial in nature'' for purposes of Title II mean the same as it does for purposes of Title I. First, section 4(k) is in the BHC Act, and the Board of Governors is the Federal agency charged with interpreting and implementing the BHC Act. Any interpretation of ''financial in nature'' under section 4(k) that is inconsistent with the Board of Governors' interpretation could frustrate Congressional intent regarding Title II. Section 204 of the Dodd Frank Act generally states that the intent of Title II is to provide for the liquidation of failing financial companies that pose a significant risk to the financial stability of the United States in a manner that mitigates such risk and minimizes moral hazard. Based upon this expression of Congressional intent regarding Title II, and given that one of the goals of Title I is to provide the authority to require the supervision of certain nonbank financial companies that could pose a threat to the financial stability of the United States, the FDIC believes that both of these goals can be achieved in a manner consistent with Congressional goals if such a key term as ''financial in nature'' is given the same meaning in both Titles I and II. Second, utilizing in Title II an interpretation of ''financial in nature'' that is inconsistent with the Title I interpretation could result in confusion on the part of companies that may be subject to either or both of Titles I and II. For example, if the interpretations are different, a company may rely on the Title I interpretation of ''financial in nature'' to incorrectly conclude that it is not subject to Title II's orderly liquidation authority. Conversely, a company may use the Title II interpretation of ''financial in nature'' to incorrectly conclude that it is not eligible under the Financial Stability Oversight Council's Title I authority to be supervised by the Board of Governors and subject to enhanced prudential standards. Third, as noted above, the FDIC believes that it is important that Titles I and II work together in a manner that provides a coherent framework for monitoring and controlling financial companies that could have a serious adverse effect on the financial stability of the United States, as they operate, and for liquidating those companies, should it be necessary, with the least disruption to the U.S. financial stability, if any should fail.

While both Title I and Title II rely on section 4(k) to determine whether a company is predominantly engaged in financial activities, there are two important differences between the two titles in how section 4(k) is utilized. One of those differences [12] is that, for purposes of Title I, only those activities that are ''financial in nature'' as defined in section 4(k) are included in determining whether a company is predominantly engaged in financial activities.[13] In contrast, Title II contemplates the inclusion of activities that the Board of Governors has determined are either ''financial in nature'' or ''incidental thereto'' under section 4(k).[14] Consequently, the FDIC is proposing to amend the March 2011 NPR to clarify that, consistent with the Board of Governors' Amended NPR and the purposes of Title II, the term ''financial activity'' includes each activity referenced in section 4(k) that the Board of Governors has determined are either financial in nature or incidental thereto without regard to conditions or limitations that are imposed on bank holding companies engaged in such activities that do not define the essential nature of the activity itself.[15]

The FDIC consulted with the Board of Governors during the development of this NPR. The FDIC also consulted with the U.S. Department of Treasury, as required by section 201(b) of the Act.

Definition of Financial Activity

Section 380.8 of the March 2011 NPR proposed a definition of ''financial activity'' that includes: (a) Any activity, wherever conducted, described in 12 CFR 225.86 or any successor regulation; (b) ownership or control of one or more depository institutions; and (c) any other activity, wherever conducted, determined by the Board of Governors in consultation with the Secretary of the Treasury, under section 4(k)(1)(A) of the BHC Act [16] to be financial in nature or incidental to a financial activity.[17]

As amended by this NPR, the activities that would be considered financial activities are those described in section 4(k) that the Board of Governors has determined are financial in nature or incidental thereto, but without the conditions and limitations imposed for safety and soundness reasons or to ensure compliance with other applicable law on the conduct of those activities by a bank holding company. Similar to the conclusion cited in the Board of Governors' Amended NPR, the FDIC believes that defining financial activities for purpose of Title II to include all of those conditions likely would enable some companies to be predominantly engaged in financial activities and yet avoid the orderly liquidation process simply by choosing not to abide by the conditions imposed on bank holding companies, including those imposed for safety and soundness. The FDIC believes that excluding those conditions that regulate the conduct of an activity by a bank holding company is consistent with the purposes of both Title II and Title I.

Additionally, because section 4(k) references financial activities that were authorized by the Board of Governors under various authorities at different points in time, certain of these financial activities overlap with, or are wholly subsumed by, other financial activities that are permissible for financial holding companies.[18] The FDIC has attempted to identify and request comment on these potential areas of overlap throughout this NPR. The following discussion describes the categories of the activities that are financial activities for purposes of this NPR and identifies the conditions of section 4(k) and Regulation Y that are not reflected in the NPR due to the fact that they do not define the essential nature of the activity.

• Lending, Exchanging, Transferring, Investing for Others, or Safeguarding Money and Securities

The activities of lending, exchanging, transferring, investing for others, or safeguarding money and securities were

[12] Under section 102(a)(6) of the Act, a company is predominantly engaged in financial activities for purposes of Title I if (i) the company's annual gross revenues derived from such activities constitute 85 percent or more of the company's annual gross consolidated revenues, or (ii) the company's consolidated assets related to such activities represent 85 percent or more of the consolidated assets of the company. Conversely, under Title II, a company is predominantly engaged in financial activities only if the company's consolidated revenues derived from financial activities constitute 85 percent or more of the company's total consolidated revenues.

[13] Section 102(a)(6) of the Dodd Frank Act.

[14] The only effect of this difference is that this NPR includes finder activities as ''financial activities'' in addition to the activities that are listed as financial-in-nature.

[15] As noted in the Board of Governors' Amended NPR, conditions that do not define the activity itself include those conditions that were imposed to ensure that the activity is conducted in a safe and sound manner, to prevent a financial holding company from controlling a commercial firm, or to comply with another provision of law. *See* 77 FR 21494 (April 10, 2012).

[16] *See,* 12 U.S.C. 1843(k)(1)(A).

[17] *See,* 76 FR 16324 (March 23, 2011).

[18] For example, activities permitted as ''closely related to banking'' and ''usual in connection with banking abroad'' were authorized by the Board of Governors over many years of interpreting the BHC Act and the International Banking Act, respectively. Because the Gramm-Leach-Bliley Act incorporated all such activities by reference in section 4(k) and authorized additional financial activities, overlapping financial activities are authorized separately in section 4(k), and in some cases, subject to different limitations and conditions.

authorized as permissible for financial holding companies by the Gramm-Leach-Bliley Act (''GLB Act'').[19]

• Insurance Activities

A broad range of insurance activities, including insuring, guaranteeing, or indemnifying against loss, harm, damage, illness, disability, or death, or providing and issuing annuities, and acting as principal, agent, or broker for purposes of the foregoing, in any State, were authorized as permissible for financial holding companies by the GLB Act.[20]

• Financial, Investment, and Economic Advisory Services

The activities of providing investment, financial, or economic advisory services were authorized as permissible for financial holding companies by the GLB Act.[21]

• Securitizing

The activity of issuing or selling instruments representing interests in pools of assets was authorized as permissible for financial holding companies by the GLB Act.[22] The GLB Act also imposed the condition that the assets being securitized must be permissible for a bank to hold directly. This condition appears to address both safety and soundness matters and restrictions imposed by other provisions of law unrelated to the financial nature of the activity, and consequently, is excluded from the definition of this activity.

• Underwriting, Dealing, and Market Making

The activities of underwriting, dealing in, and making a market in securities were authorized as permissible for financial holding companies by the GLB Act.[23]

• Extending Credit and Servicing Loans

The activities of making, acquiring, brokering, or servicing loans or other extensions of credit (including factoring, issuing letters of credit and accepting drafts) for the company's account or for the account of others were authorized by the Board of Governors as activities that are closely related to banking and thus permissible for bank holding companies.[24] The FDIC requests comment on whether these lending activities are included in the broad authorization of lending under section 4(k)(4)(A) of the BHC Act and need not be separately reflected in this NPR.

• Activities Related to Extending Credit

Activities usual in connection with making, acquiring, brokering, or servicing loans or other extensions of credit were determined to be permissible by the Board of Governors for bank holding companies as activities that are closely related to banking.[25] These activities include performing appraisals of real estate and personal property (including securities), acting as an intermediary for commercial or industrial real estate financing, providing check guarantee services, providing collection agency services, providing credit bureau services, engaging in asset management, servicing, and collection activities, acquiring debt in default, and providing real estate settlement services.[26] This NPR reflects these activities without the conditions imposed on the conduct of these activities by a bank holding company that do not describe the financial activities themselves.

For example, under the Board of Governors' Regulation Y, a bank holding company may not have an interest in, participate in managing or developing, or promote or sponsor the development of the property for which it is arranging commercial real estate equity financing. This NPR does not reflect these conditions because they are not essential to the activity of arranging commercial real estate equity financing.[27] Similarly, under the regulations issued by the Board of Governors, bank holding companies conducting asset management activities may engage in these activities only if the company does not also engage in real property management or real estate brokerage.[28] This NPR does not reflect that condition because, for purposes of determining whether a company is predominantly engaged in financial activities, the restriction could be read to exclude any asset management activity from being treated as financial if the company also engaged in any real estate brokerage or property management activities. Neither real estate brokerage nor real estate management is a permissible financial activity for financial holding companies, and neither activity is considered to be financial for purposes of Title II. As a result, a company may engage in these activities and still be predominantly engaged in financial activities so long as the revenues from its financial activities comprise at least 85 percent of the company's total consolidated revenues.

The Board of Governors' regulations require a bank holding company acquiring debt in default to divest impermissible assets securing debt in default within a certain time period, stand only in the position of a creditor, not purchase equity of obligors of debt in default, and not acquire debt in default secured by shares of a bank or bank holding company. This NPR does not reflect these conditions because they do not appear to be part of the essential nature of the activity of acquiring debt in default. The conditions requiring the bank holding company to divest impermissible assets, stand only in the position of a creditor, and not purchase equity of obligors are intended to prevent a bank holding company from owning assets prohibited by the BHC Act or other provisions of law and do not define the essential nature of the activity of acquiring debt in default. Similarly, the condition requiring that the debt not be secured by shares of a bank or bank holding company was imposed to prevent the bank holding company from circumventing the BHC Act's requirement that a bank holding company obtain approval from the Board of Governors before acquiring control of another bank or bank holding company.

• Leasing

Leasing personal or real property, and acting as an agent, broker, or adviser for personal or real property was determined to be closely related to banking by the Board of Governors.[29]

• Operating Nonbank Depository Institutions

The activities of owning, controlling, and operating depository institutions that are not ''banks'' under the BHC Act, including industrial banks, Morris Plan banks, industrial loan companies and savings associations, were determined to be closely related to banking by the Board of Governors.[30] While regulations issued by the Board of Governors require that a target savings association be engaged only in deposit-taking activities and activities permissible for bank holding companies, this NPR does not include these conditions because they are not essential elements of the activity of owning a nonbank depository institution.

[19] 12 U.S.C. 1843(k)(4)(A).

[20] 12 U.S.C. 1843(k)(4)(B).

[21] 12 U.S.C. 1843(k)(4)(C).

[22] 12 U.S.C. 1843(k)(4)(D).

[23] 12 U.S.C. 1843(k)(4)(E).

[24] 12 U.S.C. 1843(k)(4)(F); 12 CFR 225.28(b)(1).

[25] 12 U.S.C. 1843(k)(4)(F); 12 CFR 225.28(b)(2).

[26] *Id.*

[27] Neither real estate brokerage nor real estate management is an activity that is financial in nature. *See* 12 U.S.C. § 1843 note; Public Law 111–8, sec. 624 (March 11, 2009).

[28] *See,* 12 CFR 225.28(b)(2)(vi).

[29] 12 U.S.C. 1834(k)(4)(F); 12 CFR 225.28(b)(3).

[30] 12 U.S.C. 1843(k)(4)(F); 12 CFR 225.28(b)(4).

• Trust Company Functions

The activities performed by a trust company were determined to be closely related to banking by the Board of Governors.[31] The FDIC requests comment on whether trust company functions are incorporated in the broad authorization provided under section 4(k)(4)(A) to engage in lending, exchanging, transferring, investing for others, and safeguarding financial assets and need not be separately reflected in the NPR.

• Financial and Investment Advisory Activities

The activities of acting as an investment or financial advisor to any person were determined to be closely related to banking by the Board of Governors.[32] These activities have been defined to include, without limitation, serving as a registered investment advisor to a registered investment company, including sponsoring, organizing, and managing a closed-end investment company; furnishing general economic information and advice, general economic statistical forecasting services, and industry studies; providing advice in connection with mergers, acquisitions, divestitures, investments, joint ventures, leveraged buyouts, recapitalizations, capital structurings, financing transactions and similar transactions; conducting financial feasibility studies; providing information, statistical forecasting, and advice with respect to any transaction in foreign exchange, swaps, and similar transactions, commodities, and any forward contract, option, future, option on a future, and similar instruments; providing educational courses and instructional materials to consumers on individual financial management matters; and providing tax-planning and tax-preparation services to any person.[33] The FDIC requests comment on whether these financial and investment advisory activities are incorporated in the broad authorization provided by section 4(k)(4)(C) of the BHC Act to provide financial, investment, and economic advisory services and need not be separately reflected in this NPR.

• Agency Transactional Services

Agency transactional services, including providing securities brokerage services, acting as a riskless principal, providing private placement services, and acting as a futures commission merchant, were determined to be closely related to banking by the Board of Governors.[34] Conditions that were imposed on bank holding companies conducting these activities in order to prevent circumvention of the Glass-Steagall Act or for safety and soundness reasons are not reflected in this NPR.

These conditions include, for instance, that bank holding companies providing securities brokerage services under this authority are limited to buying and selling securities solely as agent for the account of customers and not conducting securities underwriting or dealing activities; those providing private placement services under this authority cannot purchase or repurchase for their own account the securities being placed or hold in inventory unsold portions of issues of those securities; and those acting as riskless principal under this authority are subject to conditions with respect to bank-ineligible securities. These conditions were intended to prevent a bank holding company from using securities brokerage or riskless principal authority to engage in activities that were impermissible under the Glass-Steagall Act.[35]

In order to act as a futures commission merchant, a bank holding company must conduct the activity through a separately incorporated subsidiary, the contract must be traded on an exchange, and the parent bank holding company cannot guarantee that subsidiary's liabilities. The NPR does not reflect these conditions, as they were imposed for safety and soundness reasons to limit the bank holding company's exposure to contingent obligations under the loss sharing rules of exchange clearinghouses in order to preserve the holding company's ability to serve as a source of strength to its insured depository institutions.[36]

In order to provide agent transactional services to customers on certain commodity derivatives transactions, the derivative must relate to a commodity that is traded on an exchange (regardless of whether the contract being traded is traded on an exchange). The NPR does not reflect this limitation because it appears to have been imposed for safety and soundness reasons and does not describe the underlying activity of providing transactional services on derivatives transactions. The FDIC requests comment on whether the agency transactional services discussed above are included in the broad authorization provided under section 4(k)(5) to engage in arranging, effecting, or facilitating financial transactions for the account of third parties and need not be separately reflected in this NPR.

• Investment Transactions as Principal

Engaging in investment transactions as principal, including underwriting and dealing in government obligations and money market instruments and investing and trading as principal in foreign exchange and derivatives, and buying and selling bullion, are activities that were determined to be closely related to banking by the Board of Governors.[37] Under regulations issued by the Board of Governors, bank holding companies engaged in underwriting and dealing in government obligations and money market instruments are subject to the same conditions imposed on member banks engaged in these activities. The NPR does not reflect these conditions because they were intended to prevent circumvention of the Glass-Steagall Act. In addition, under the Board of Governors' applicable regulations, bank holding companies engaged in derivatives transactions are subject to certain conditions, including that the derivative contract itself cannot be a bank-ineligible security and either the asset underlying the contract be a bank permissible asset or that the contract contain protections against physical settlement. This NPR does not include these conditions imposed on derivatives activities because these conditions appear to have been imposed to prevent circumvention of the Glass-Steagall Act's limitations on underwriting and dealing activities and for safety and soundness reasons.

The FDIC requests comment on whether the activity of underwriting and dealing in government obligations and money market instruments is included in the broad authorization provided under section 4(k)(4)(E) of the BHC Act to engage in underwriting, dealing in, or making a market in securities and need not be separately reflected in this NPR for purposes of Title II.

• Management Consulting and Counseling Activities

Providing management consulting services on any matter to unaffiliated depository institutions and on any financial, economic, accounting, or audit matter to any other company was determined to be closely related to banking by the Board of Governors.[38] Under regulations issued by the Board of Governors, bank holding companies engaged in management consulting

[31] 12 U.S.C. 1843(k)(4)(F); 12 CFR 225.28(b)(5).

[32] 12 U.S.C. 1843(k)(4)(F); 12 CFR 225.28(b)(6).

[33] *Id.*

[34] 12 U.S.C. 1843(k)(4)(F); 12 CFR 225.28(b)(7).

[35] 62 FR 9308 (February 8, 1997).

[36] *Id.* at 9309.

[37] 12 U.S.C. 1843(k)(4)(F); 12 CFR 225.28(b)(8).

[38] 12 U.S.C. 1843(k)(4)(F); 12 CFR 225.28(b)(9)(i).

activities may not own more than five (5) percent of the client institution or have a management interlock. This NPR does not reflect this condition because it was intended to ensure that a bank holding company does not exercise control over a client company through a management consulting contract and to prevent conflicts of interest.[39] The FDIC requests comment on whether the activity of management consulting is subsumed by the broader authority to engage in management consulting services that was determined to be usual in connection with banking abroad and need not be separately reflected in this NPR for purposes of Title II.

Providing employee benefits consulting services was determined to be closely related to banking by the Board of Governors[40] and is included in this NPR. Providing career counseling services also was determined to be closely related to banking by the Board of Governors, subject to the conditions that the services are provided to a financial organization, to individuals who are seeking employment at a financial institution, or to individuals currently employed in or who are seeking positions in the finance, accounting, and audit departments of any company.[41] These conditions appear to be essential to this activity's being considered financial and thus are included in the definition of this financial activity for purposes of Title II in this NPR.

• Courier Services and Printing and Selling MICR-Encoded Items

Providing courier services for certain instruments and audit and accounting media, and printing and selling MICR-encoded items were determined to be closely related to banking by the Board of Governors.[42]

• Insurance Agency and Underwriting

Activities related to the provision of credit insurance and insurance in small towns were determined by the Board of Governors to be closely related to banking.[43] The FDIC requests comment on whether these insurance activities are included in the broad authorization of insurance activities provided under section 4(k)(4)(B) of the BHC Act and thus need not be separately reflected in this NPR for purposes of Title II.

• Community Development Activities

Making debt and equity investments in corporations or projects that are designed primarily to promote community welfare, and providing advisory and related services for such programs, was determined to be closely related to banking by the Board of Governors.[44]

• Money Orders, Savings Bonds, and Traveler's Checks

The issuance and sale of money orders and traveler's checks, and the issuance of savings bonds, were determined to be closely related to banking by the Board of Governors.[45]

• Data Processing

Providing data processing services and related activities with respect to financial, banking, or economic data was determined to be closely related to banking by the Board of Governors.[46] Under regulations issued by the Board of Governors, a bank holding company's data processing activities must comply with the condition that the hardware provided in connection with these services is offered only in conjunction with software related to the processing, storage, and transmission of financial, banking, or economic data, and where the general purpose hardware does not constitute more than thirty (30) percent of the cost of any packaged offering. This NPR does not include these conditions because they do not define the essential nature of the activity of data processing.

• Management Consulting Services

Providing management consulting services was determined to be usual in connection with the transaction of banking or other financial operations abroad.[47] Under regulations issued by the Board of Governors, bank holding companies are prohibited from controlling the person to which the services are provided. This NPR does not reflect this condition because it appears to have been intended to ensure that a bank holding company does not exercise control over a client company through a management consulting contract and to prevent conflicts of interest.

• Mutual Fund Advisory Services

Providing administrative and other services to mutual funds was determined to be closely related to banking by the Board of Governors.[48]

• Owning Shares of a Securities Exchange

Owning shares of a securities exchange was determined to be closely related to banking by the Board of Governors.[49]

• Certification Services

Acting as a certification authority for digital signatures and authenticating the identity of persons conducting financial and nonfinancial transactions was determined to be closely related to banking by the Board of Governors.[50]

• Providing Employment Histories

Providing employment histories to third parties for use in making credit decisions and to depository institutions and their affiliates for use in the ordinary course of business was determined to be closely related to banking by the Board of Governors.[51]

• Check-Cashing and Wire-Transmission Services

Providing check-cashing and wire-transmission services was determined to be closely related to banking by the Board of Governors.[52]

• Postage, Vehicle Registration, Public Transportation Services

Providing notary-public services, selling postage stamps and postage-paid envelopes, providing vehicle registration services, and selling public-transportation tickets and tokens in connection with offering banking services were determined to be closely related to banking by the Board of Governors.[53]

• Real Estate Title Abstracting

Engaging in real estate title abstracting was determined to be closely related to banking by the Board of Governors.[54]

• Travel Agency

Operating a travel agency in connection with financial services was determined to be usual in connection with the transaction of banking or other financial operations abroad.[55]

[39] *See* 62 FR 9312 (February 28, 1997).

[40] 12 U.S.C. 1843(k)(4)(F); 12 CFR 225.28(b)(9)(ii).

[41] 12 U.S.C. 1843(k)(4)(F); 12 CFR 225.28(b)(9)(iii).

[42] 12 U.S.C. 1843(k)(4)(F); 12 CFR 225.28(b)(10)(i); 12 U.S.C. 1843(k)(4)(F); 12 CFR 225.28(b)(10)(ii).

[43] 12 U.S.C. 1843(k)(4)(F); 12 CFR 225.28(b)(11).

[44] 12 U.S.C. 1843(k)(4)(F); 12 CFR 225.28(b)(12).

[45] 12 U.S.C. 1843(k)(4)(F); 12 CFR 225.28(b)(13).

[46] 12 U.S.C. 1843(k)(4)(F); 12 CFR 225.28(b)(14).

[47] 12 U.S.C. 1843(k)(4)(G); 12 CFR 225.86(b)(1).

[48] 12 U.S.C. 1843(k)(4)(F); 12 CFR 225.86(a)(2)(i).

[49] 12 U.S.C. 1843(k)(4)(F); 12 CFR 225.86(a)(2)(ii).

[50] 12 U.S.C. 1843(k)(4)(F); 12 CFR 225.86(a)(2)(iii).

[51] 12 U.S.C. 1843(k)(4)(F); 12 CFR 225.86(a)(2)(iv).

[52] 12 U.S.C. 1843(k)(4)(F); 12 CFR 225.86(a)(2)(v).

[53] 12 U.S.C. 1843(k)(4)(F); 12 CFR 225.86(a)(2)(vi).

[54] 12 U.S.C. 1843(k)(4)(F); 12 CFR 225.86(a)(2)(vii).

[55] 12 U.S.C. 1843(k)(4)(G); 12 CFR 225.86(b)(2).

• Mutual Fund Activities

Organizing, sponsoring, and managing a mutual fund was determined to be usual in connection with the transaction of banking or other financial operations abroad.[56] Under regulations issued by the Board of Governors, bank holding companies are prohibited from exerting managerial control over the companies in which the fund invests and must reduce their ownership to less than twenty-five (25) percent of the equity of the fund within one year of sponsoring the fund. This NPR does not reflect these conditions because they were imposed to prevent circumvention of the investment restrictions in the BHC Act.

• Finder Activities

Acting as a finder in bringing together one or more buyers and sellers of any product or service for transactions that the parties themselves negotiate and consummate has been deemed to be an activity that is financial in nature or incidental thereto by the Board of Governors under section 4(k)(5) of the BHC Act.[57] Under regulations issued by the Board of Governors, acting as a finder includes providing any or all of the following services through any means: (a) Adentifying potential parties, making inquiries as to interest, introducing and referring potential parties to each other, and arranging contacts between and meetings of interested parties; (b) conveying between interested parties expressions of interest, bids, offers, orders and confirmations relating to a transaction; and (c) transmitting information concerning products and services to potential parties in connection with the activities listed in (a) and (b).

Under the Board of Governors' Regulation Y, certain limitations are applicable to financial holding companies that engage in finder activities. These limitations include acting only as an intermediary between a buyer and a seller; not binding any buyer or seller to the terms of a specific transaction or negotiating the terms of a specific transaction on behalf of a buyer or seller, except that (1) a finder may arrange for buyers to receive preferred terms from sellers so long as the terms are not negotiated as part of any individual transaction, are provided generally to customers or broad categories of customers, and are made available by the seller (and not by the company), and (2) a finder may establish rules of general applicability governing the use and operation of the finder service, including rules that govern the submission of bids and offers by buyers and sellers, the circumstances under which the finder service will match bids and offers, and the manner in which buyers and sellers may bind themselves to the terms of a specific transaction. These conditions appear to be essential to the essence of the activity, and thus are reflected in this NPR.

Regulation Y also prohibits financial holding companies engaged in finder activities from (a) taking title to or acquiring or holding an ownership interest in any product or service offered or sold through the finder service; (b) providing distribution services for physical products or services offered or sold through the finder service; (c) owning or operating any real or personal property that is used for the purpose of manufacturing, storing, transporting, or assembling physical products offered or sold by third parties; (d) owning or operating any real or personal property that serves as a physical location for the physical purchase, sale or distribution of products or services offered or sold by third parties; or (e) engaging in any activity that would require the company to register or obtain a license as a real estate agent or broker under applicable law. Each of these conditions, with the exception of the prohibition on engaging in any activity that would require the company to register or obtain a license as a real estate agent or broker, appear to be essential to the nature of acting as a finder and are reflected accordingly in this NPR.

The prohibition on engaging in any activity that would require the company to register or obtain a license as a real estate agent or broker was imposed to prevent bank holding companies from engaging in any real estate brokerage or property management activities. If reflected in this NPR, this prohibition could be read to exclude any finder activity from being considered a financial activity if the company engaged in the activity were also engaged in any real estate brokerage or property management activity. The FDIC believes that this condition does not define the essential nature of the activity of acting as a finder itself. Therefore, because neither real estate brokerage nor real estate management is an activity that is financial in nature, a company may engage in such activities and still be predominantly engaged in financial activities so long as the revenues derived from financial activities comprise at least eighty-five percent of the company's total consolidated revenues.

• Merchant Banking

Section 4(k)(4)(H) of the BHC Act authorizes financial holding companies to acquire ''shares, assets or ownership interests,'' including debt or equity securities, in a company engaged in any activity not authorized under section 4 ''as part of a bona fide underwriting or merchant or investment banking activity, including investment activities engaged in for the purpose of appreciation and ultimate resale or disposition of the investment,'' subject to the following conditions: (a) The shares may not be acquired or held by a depository institution; (b) the shares must be acquired and held by a securities affiliate or an affiliate thereof, or in the case of a financial holding company that has an insurance company affiliate, the shares must be acquired and held by an affiliate that provides investment advice to an insurance company and is registered pursuant to the Investment Advisers Act of 1940, or an affiliate thereof, as part of a bona fide underwriting or merchant or investment banking activity, including investment activities engaged in for the purpose of appreciation and ultimate resale or disposition of the investment; (c) the shares must be held for a period of time to enable the sale or disposition on a reasonable basis consistent with the financial viability of the company's underwriting, merchant, or investment banking activities; and (d) during the period the shares are held, the bank holding company may not routinely manage or operate the company except as may be necessary to obtain a reasonable return on investment upon resale or disposition.[58] The NPR includes the last two of those conditions because they appear to define the essential nature of the activities of underwriting, merchant, or investment banking activities, and omits the first two conditions.

First, the condition requiring that the shares be held for a period of time to enable their sale or disposition on a reasonable basis consistent with the financial viability of the company's underwriting, merchant, or investment banking activities appears to be an essential element of a bona fide underwriting, merchant, or investment banking activity. Thus, this condition is reflected in the NPR. Companies engaging in bona fide underwriting, merchant, or investment banking activities do not invest in investee companies for the purpose of engaging in the activity in which the investee company is engaged, but instead invest

[56] 12 U.S.C. 1843(k)(4)(G); 12 CFR 225.86(b)(3).

[57] 12 U.S.C. 1843(k)(5)(B); 12 CFR 225.86(d)(1).

[58] 12 U.S.C. 1843(k)(4)(H).

with the intent to sell the instruments at some later point in time at which a profit is expected to be realized. The length of time that the shares are held will vary by investment.[59]

For example, certain companies, such as private equity firms, that are engaged in bona fide underwriting, merchant, or investment banking activities typically invest in firms that the private equity firm believes will increase in value over time and can be resold at a profit. The holding period for an investment will vary based on the investee company, and in some cases the private equity firm may hold the shares for several years. A firm such as a hedge fund or a mutual fund invests in firms with the expectation to sell those instruments at a future date in order to realize profits consistent with its particular investment strategy. The holding period for an investment by a hedge fund or a mutual fund will depend on the length of time necessary to recognize gains consistent with the fund's investment strategy.

The prohibition on routinely managing an investee company in which it has purchased shares, other than for purposes of recognizing a reasonable return, appears to be an essential element of bona fide underwriting, merchant, or investment banking activities. Thus, this prohibition is reflected in this NPR. As previously discussed, companies engaging in these activities purchase shares of investee companies to recognize an ultimate profit, rather than to engage in the underlying activity in which the investee company engages as its primary business activity. Routinely managing the companies, other than for the goal of recognizing a reasonable return, would be inconsistent with the underlying nature of the activities. Therefore, in order for an activity to qualify as a bona fide underwriting, merchant, or investment banking activity, a financial company must comply with this restriction.[60]

By contrast, the condition requiring that shares acquired as part of a bona fide underwriting or merchant or investment banking activity not be acquired or held by a depository institution is not an essential element of such activities, and thus is not reflected in this NPR. This restriction was imposed because banks are restricted from investing in certain types of companies by statute and regulation.[61] Similarly, the condition in section 4(k) requiring a financial holding company engaging in underwriting or merchant or investment banking activities to either have (a) a securities affiliate, or (b) in the case of a financial holding company that has an insurance company affiliate, an affiliate that provides investment advice to an insurance company and is registered pursuant to the Investment Advisors Act of 1940, does not appear to be an essential element of these activities because the condition does not require that the activity be conducted through the securities affiliate or investment advisor affiliate of the financial holding company. The condition was designed to ensure that only those financial holding companies with experience engaging in underwriting, merchant, or investment banking activities conducted such activities. This NPR proposes to define the activities of underwriting, merchant, and investment banking for purposes of Title II to include only the conditions that appear to be essential elements of the activities themselves, as discussed above.[62]

In addition, this NPR does not reflect the provisions of section 4(k)(4)(H) that the investment be in a company engaged in any activity not authorized under section 4 of the BHC Act because this provision does not affect the scope of activities that are financial activities for purposes of Title II. An investment in a company solely engaged in activities permissible under section 4 of the BHC Act would otherwise be treated as a financial activity.

Section 4(k)(4)(I) of the BHC Act similarly authorizes financial holding companies to acquire ''shares, assets or ownership interests,'' including debt or equity securities, of a company or other entity engaged in any activity not authorized by section 4(k) if (a) the shares, assets, or ownership interests are not acquired or held by a depository institution or a subsidiary of a depository institution; (b) such shares, assets, or ownership interests are acquired and held by an insurance company that is predominantly engaged in underwriting life, accident, and health, or property and casualty insurance (other than credit-related insurance) or providing and issuing annuities; (c) such shares, assets, or ownership interest represent an investment made in the ordinary course of business of such insurance company in accordance with relevant State law governing such investments; and (d) during the period such shares, assets, or ownership interests are held, the bank holding company does not routinely manage or operate such company except as may be necessary or required to obtain a reasonable return on investment.

The condition requiring that shares, assets, or ownership interests not be acquired or held by a depository institution does not appear to be an essential element of the investment activities authorized by section 4(k)(4)(I) of the BHC Act, and thus is not reflected in this NPR. This restriction was imposed because banks are restricted from investing in certain types of companies by statute and regulation.[63] Each of the other conditions imposed on the conduct of the activity by a bank holding company appears to be an essential element of the activity of investing in connection with engaging in insurance activities. This NPR proposes to define the investment activities authorized by section 4(k)(4)(I) for purposes of Title II to include only the last three conditions because they appear to be essential elements of these activities, as discussed above.

• Lending, Safeguarding, Exchanging, and Investing for Others With Respect to Financial Assets Other Than Money and Securities

The GLB Act authorizes the activities of lending, exchanging, transferring, investing for others, safeguarding assets other than money or securities; providing any device or other instrumentality for transferring money or other financial assets; and arranging, effecting, or facilitating financial transactions for the account of third

[59] The Board of Governors and the Secretary of Treasury jointly promulgated regulations interpreting the holding period for merchant banking investments by financial holding companies under section 4(k)(7) of the BHC Act. This regulatory interpretation is separate from the activity of merchant banking set forth in section 4(k)(4)(H) of the BHC Act and would not apply for determining whether an activity is a financial activity for purposes of Title II. *See* 12 CFR 225.172 and 12 CFR 1500.3, respectively.

[60] The Board of Governors and the Secretary of the Treasury jointly promulgated regulations interpreting the limitation on routine management or operation for merchant banking investments by financial holding companies under section 4(k)(7) of the BHC Act. This regulatory interpretation is separate from the activity of merchant banking set forth in section 4(k)(4)(H) of the BHC Act and would not apply for determining whether an activity is a financial activity for purposes of Title II. *See* 12 CFR 225.171 and 12 CFR 1500.2, respectively.

[61] *See e.g.* 12 U.S.C. 24, (Seventh); 12 U.S.C. 24 (Eleventh); and 12 CFR Part 1 (for national banks); and 12 U.S.C. 1831a; and 12 CFR Part 362 (for state banks).

[62] Similarly, the FSOC has indicated its belief that nonbank financial companies such as hedge funds, private equity firms, and asset management companies, will be eligible for designation under section 113 of the Act. *See* 77 FR 21637, 21643 (April 11, 2012); *see also* 77 FR 21494 (April 10, 2012).

[63] *See e.g.* 12 U.S.C. 24, (Seventh); 12 U.S.C. 24 (Eleventh); and 12 CFR part 1 (for national banks); and 12 U.S.C. 1831a; and 12 CFR part 362 (for state banks).

parties for financial holding companies.[64] The GLB Act requires the Board of Governors to define these activities as financial in nature and the extent to which such activities are financial in nature or incidental thereto. The Board of Governors and the Secretary of the Treasury issued a joint interim rule authorizing such activities as permissible for financial holding companies.[65]

• Owning or Controlling One or More Depository Institutions

Section 201(b) of the Dodd-Frank Act requires that revenues derived from the ownership or control of one or more depository institutions be included in determining whether a company is a financial company.

IV. Solicitation of Comments on Use of Plain Language

Section 722 of the Gramm-Leach-Bliley Act, Public Law 106–102, sec. 722, 113 Stat. 1338, 1471 (Nov. 12, 1999), requires the FDIC to use plain language in all proposed and final rules published after January 1, 2000. The FDIC invites comments on how to make this proposal easier to understand. For example:

• Have we organized the material to suit your needs? If not, how could this material be better organized?

• Are the requirements in the proposed regulation clearly stated? If not, how could the regulation be more clearly stated?

• Does the proposed regulation contain language or jargon that is not clear? If so, which language requires clarification?

• Would a different format (grouping and order of sections, use of headings, paragraphing) make the regulation easier to understand? If so, what changes to the format would make the regulation easier to understand?

• What else could we do to make the regulation easier to understand?

V. Administrative Law Matters

A. Paperwork Reduction Act

The amendment to the March 2011 NPR contained in this NPR would not involve any new collections of information pursuant to the Paperwork Reduction Act (44 U.S.C. § 3501 *et seq.*). Consequently, no information has been submitted to the Office of Management and Budget for review.

B. Regulatory Flexibility Act

The Regulatory Flexibility Act (''RFA''), 5 U.S.C. 601 *et seq.,* requires an agency to consider whether the rules it proposes will have a significant economic impact on a substantial number of small entities. If so, the agency must prepare an initial and final regulatory flexibility analysis respecting the significant economic impact. Pursuant to section 605(b) of the RFA, the regulatory flexibility analysis otherwise required under sections 603 and 604 of the RFA is not required if an agency certifies that the rule will not have a significant economic impact on a substantial number of small entities. The FDIC has considered the potential impact of the amendment proposed in this NPR on small entities in accordance with the RFA. The amendment contained in this NPR does not appear to have a significant economic impact on small entities for several reasons.

First, proposed section 380.8, as amended by this NPR, would establish criteria for calculating revenues to determine whether a company is ''predominantly engaged in activities that the Board of Governors has determined are financial in nature or incidental thereto'' for purposes of determining whether a company is a ''financial company'' under Title II of the Dodd-Frank Act. In order to be eligible for the orderly liquidation provisions of Title II, a company would have to satisfy the definition of ''financial company.'' However, a company that is a ''financial company'' is not automatically subject to the orderly liquidation authority provisions of Title II. Only a financial company for which the Secretary of Treasury has made a determination in accordance with sections 203 of Title II is a ''covered financial company'' subject to Title II. The amendment contained in this NPR is limited to clarifying the definition of financial activities for purposes of the definition of ''financial company'' under section 201(a)(11) of the Act.

Second, a determination by the Secretary of the U.S. Treasury under section 203(b) of the Act requires, among other things, a determination that the failure of the financial company and its resolution under otherwise applicable Federal or State law would have serious adverse effects on financial stability in the United States. Under the regulations of the Small Business Administration (SBA), firms within the ''Finance and Insurance'' sector are considered ''small'' if their annual receipts do not exceed $7 million or their total assets do not exceed $174 million.[66] The FDIC does not expect that Title II of the Act will be used to resolve financial companies that qualify as small entities, because the failure of such companies would be unlikely to have serious adverse effects on financial stability in the United States. Therefore, the FDIC does not believe that proposed section 380.8, as amended, would have a significant economic impact on a substantial number of small entities.

For the reasons stated above and pursuant to section 605(b) of the Regulatory Flexibility Act, the FDIC certifies that the proposed rule, as amended by this NPR, will not have a significant economic impact on a substantial number of small entities.

Text of the Proposed Rule

Federal Deposit Insurance Corporation

12 CFR Chapter III

List of Subjects

12 CFR Part 380

Holding companies, Insurance companies.

Authority and Issuance

For the reasons set forth in the Supplementary Information, the FDIC proposes to amend title 12 part 380 of the Code of Federal Regulations as follows:

PART 380—ORDERLY LIQUIDATION AUTHORITY

1. The authority for part 380 continues to read as follows:

Authority: 12 U.S.C. 5301 *et seq.*

2. Section 380.8, which was proposed as part of the notice of proposed rulemaking titled ''Orderly Liquidation Authority'' 76 FR 16324 (March 23, 2011) is amended by revising paragraph (b)(2) to read as follows:

§ 380.8 Predominantly engaged in activities that are financial or incidental thereto.

* * * * *

(b) For purposes of paragraph (a) of this section, the following definitions apply:

(1) * * *

(2) The term ''financial activity'' means:

(i) Lending, exchanging, transferring, investing for others, or safeguarding money and securities.

(ii) Insuring, guaranteeing, or indemnifying against loss, harm, damage, illness, disability, or death, or providing and issuing annuities, and acting as principal, agent, or broker for purposes of the foregoing, in any state.

(iii) Providing financial, investment, or economic advisory services, including advising an investment

[64] 12 U.S.C. 1843(k)(5).

[65] *See* 66 FR 257 (January 3, 2001).

[66] 13 CFR 121.201.

company (as defined in section 3 of the Investment Company Act of 1940).

(iv) Issuing or selling instruments representing interests in pools of assets.

(v) Underwriting, dealing in, or making a market in securities.

(vi) Extending credit and servicing loans. Making, acquiring, brokering, or servicing loans or other extensions of credit (including factoring, issuing letters of credit and accepting drafts) for the company's account or for the account of others.

(vii) Activities related to extending credit. Any activity usual in connection with making, acquiring, brokering or servicing loans or other extensions of credit, including the following activities.

(A) Real estate and personal property appraising. Performing appraisals of real estate and tangible and intangible personal property, including securities.

(B) Arranging commercial real estate equity financing. Acting as intermediary for the financing of commercial or industrial income-producing real estate by arranging for the transfer of the title, control, and risk of such a real estate project to one or more investors.

(C) Check-guaranty services. Authorizing a subscribing merchant to accept personal checks tendered by the merchant's customers in payment for goods and services, and purchasing from the merchant validly authorized checks that are subsequently dishonored.

(D) Collection agency services. Collecting overdue accounts receivable, either retail or commercial.

(E) Credit bureau services. Maintaining information related to the credit history of consumers and providing the information to a credit grantor who is considering a borrower's application for credit or who has extended credit to the borrower.

(F) Asset management, servicing, and collection activities. Engaging under contract with a third party in asset management, servicing, and collection [1] of assets of a type that an insured depository institution may originate and own.

(G) Acquiring debt in default. Acquiring debt that is in default at the time of acquisition.

(H) Providing real estate settlement services.[2]

(viii) Leasing personal or real property. Leasing personal or real property or acting as agent, broker, or adviser in leasing such property if—

(A) The lease is on a nonoperating basis; [3]

(B) The initial term of the lease is at least 90 days; and

(C) In the case of leases involving real property:

(*1*) At the inception of the initial lease, the effect of the transaction will yield a return that will compensate the lessor for not less than the lessor's full investment in the property plus the estimated total cost of financing the property over the term of the lease from rental payments, estimated tax benefits, and the estimated residual value of the property at the expiration of the initial lease; and

(*2*) The estimated residual value of property for purposes of paragraph (b)(2)(viii)(C)(*1*) of this section shall not exceed 25 percent of the acquisition cost of the property to the lessor.

(ix) Operating nonbank depository institutions—(A) Industrial banking. Owning, controlling, or operating an industrial bank, Morris Plan bank, or industrial loan company that is not a bank for purposes of the BHC Act.

(B) Operating savings association. Owning, controlling, or operating a savings association.

(x) Trust company functions. Performing functions or activities that may be performed by a trust company (including activities of a fiduciary, agency, or custodial nature), in the manner authorized by federal or state law that is not a bank for purposes of section 2(c) of the Bank Holding Company Act.

(xi) Financial and investment advisory activities. Acting as investment or financial advisor to any person, including (without, in any way, limiting the foregoing):

(A) Serving as investment adviser (as defined in section 2(a)(20) of the Investment Company Act of 1940, 15 U.S.C. 80a–2(a)(20)), to an investment company registered under that act, including sponsoring, organizing, and managing a closed-end investment company;

(B) Furnishing general economic information and advice, general economic statistical forecasting services, and industry studies;

(C) Providing advice in connection with mergers, acquisitions, divestitures, investments, joint ventures, leveraged buyouts, recapitalizations, capital structurings, financing transactions and similar transactions, and conducting financial feasibility studies; [4]

(D) Providing information, statistical forecasting, and advice with respect to any transaction in foreign exchange, swaps, and similar transactions, commodities, and any forward contract, option, future, option on a future, and similar instruments;

(E) Providing educational courses, and instructional materials to consumers on individual financial management matters; and

(F) Providing tax-planning and tax-preparation services to any person.

(xii) Agency transactional services for customer investments—(A) Securities brokerage. Providing securities brokerage services (including securities clearing and/or securities execution services on an exchange), whether alone or in combination with investment advisory services, and incidental activities (including related securities credit activities and custodial services).

(B) Riskless principal transactions. Buying and selling in the secondary market all types of securities on the order of customers as a ''riskless principal'' to the extent of engaging in a transaction in which the company, after receiving an order to buy (or sell) a security from a customer, purchases (or sells) the security for its own account to offset a contemporaneous sale to (or purchase from) the customer.

(C) Private placement services. Acting as agent for the private placement of securities in accordance with the requirements of the Securities Act of 1933 (1933 Act) and the rules of the Securities and Exchange Commission.

(D) Futures commission merchant. Acting as a futures commission merchant (FCM) for unaffiliated persons in the execution, clearance, or execution and clearance of any futures contract and option on a futures contract.

(E) Other transactional services. Providing to customers as agent transactional services with respect to swaps and similar transactions, any

[1] Asset management services include acting as agent in the liquidation or sale of loans and collateral for loans, including real estate and other assets acquired through foreclosure or in satisfaction of debts previously contracted.

[2] For purposes of this section, real estate settlement services do not include providing title insurance as principal, agent, or broker.

[3] The requirement that the lease be on a nonoperating basis means that the company may not, directly or indirectly, engage in operating, servicing, maintaining, or repairing leased property during the lease term. For purposes of the leasing of automobiles, the requirement that the lease be on a nonoperating basis means that the company may not, directly or indirectly: (1) Provide servicing, repair, or maintenance of the leased vehicle during the lease term; (2) purchase parts or accessories in bulk or for an individual vehicle after the lessee has taken delivery of the vehicle; (3) provide the loan of an automobile during the servicing of the leased vehicle; (4) purchase insurance for the lessee; or (5) provide for the renewal of the vehicle's license merely as a service to the lessee where the lessee could renew the license without authorization from the lessor. The company may arrange for a third party to provide these services or products.

[4] Feasibility studies do not include assisting management with the planning or marketing for a given project or providing general operational or management advice.

transaction described in paragraph (b)(2)(xiii) of this section, any transaction that is permissible for a state member bank, and any other transaction involving a forward contract, option, futures, option on a futures or similar contract (whether traded on an exchange or not).

(xiii) Investment transactions as principal—(A) Underwriting and dealing in government obligations and money market instruments. Underwriting and dealing in obligations of the United States, general obligations of states and their political subdivisions, and other obligations that state member banks of the Federal Reserve System may be authorized to underwrite and deal in under 12 U.S.C. 24 and 335, including banker's acceptances and certificates of deposit,

(B) Investing and trading activities. Engaging as principal in:

(*1*) Foreign exchange;

(*2*) Forward contracts, options, futures, options on futures, swaps, and similar contracts, whether traded on exchanges or not, based on any rate, price, financial asset (including gold, silver, platinum, palladium, copper, or any other metal), nonfinancial asset, or group of assets;

(*3*) Forward contracts, options, futures, options on futures, swaps, and similar contracts, whether traded on exchanges or not, based on an index of a rate, a price, or the value of any financial asset, nonfinancial asset, or group of assets.

(C) Buying and selling bullion, and related activities. Buying, selling and storing bars, rounds, bullion, and coins of gold, silver, platinum, palladium, copper, and any other metal for the company's own account and the account of others, and providing incidental services such as arranging for storage, safe custody, assaying, and shipment.

(xiv) Management consulting and counseling activities—(A) Management consulting. Providing management consulting advice: [5]

(*1*) On any matter to unaffiliated depository institutions, including commercial banks, savings and loan associations, savings banks, credit unions, industrial banks, Morris Plan banks, cooperative banks, industrial loan companies, trust companies, and branches or agencies of foreign banks;

(*2*) On any financial, economic, accounting, or audit matter to any other company.

(B) Employee benefits consulting services. Providing consulting services to employee benefit, compensation and insurance plans, including designing plans, assisting in the implementation of plans, providing administrative services to plans, and developing employee communication programs for plans.

(C) Career counseling services. Providing career counseling services to:

(*1*) A financial organization [6] and individuals currently employed by, or recently displaced from, a financial organization;

(*2*) Individuals who are seeking employment at a financial organization; and

(*3*) Individuals who are currently employed in or who seek positions in the finance, accounting, and audit departments of any company.

(xv) Support services—(A) Courier services. Providing courier services for:

(*1*) Checks, commercial papers, documents, and written instruments (excluding currency or bearer-type negotiable instruments) that are exchanged among banks and financial institutions; and

(*2*) Audit and accounting media of a banking or financial nature and other business records and documents used in processing such media.[7]

(B) Printing and selling MICR-encoded items. Printing and selling checks and related documents, including corporate image checks, cash tickets, voucher checks, deposit slips, savings withdrawal packages, and other forms that require Magnetic Ink Character Recognition (MICR) encoding.

(xvi) Insurance agency and underwriting—(A) Credit insurance. Acting as principal, agent, or broker for insurance (including home mortgage redemption insurance) that is:

(*1*) Directly related to an extension of credit by the company or any of its subsidiaries; and

(*2*) Limited to ensuring the repayment of the outstanding balance due on the extension of credit [8] in the event of the death, disability, or involuntary unemployment of the debtor.

(B) Finance company subsidiary. Acting as agent or broker for insurance directly related to an extension of credit by a finance company [9] that is a subsidiary of a company, if:

(*1*) The insurance is limited to ensuring repayment of the outstanding balance on such extension of credit in the event of loss or damage to any property used as collateral for the extension of credit; and

(*2*) The extension of credit is not more than $10,000, or $25,000 if it is to finance the purchase of a residential manufactured home [10] and the credit is secured by the home; and

(*3*) The applicant commits to notify borrowers in writing that:

(*i*) They are not required to purchase such insurance from the applicant;

(*ii*) Such insurance does not insure any interest of the borrower in the collateral; and

(*iii*) The applicant will accept more comprehensive property insurance in place of such single-interest insurance.

(C) Insurance in small towns. Engaging in any insurance agency activity in a place where the company or a subsidiary of the company has a lending office and that:

(*1*) Has a population not exceeding 5,000 (as shown in the preceding decennial census); or

(*2*) Has inadequate insurance agency facilities, as determined by the Board of Governors, after notice and opportunity for hearing.

(D) Insurance-agency activities conducted on May 1, 1982. Engaging in any specific insurance-agency activity [11] if the company, or subsidiary conducting the specific activity, conducted such activity on May 1, 1982, or received approval from the Board of Governors to conduct such activity on or before May 1, 1982.[12] A company or

[5] In performing this activity, companies are not authorized to perform tasks or operations or provide services to client institutions either on a daily or continuing basis, except as necessary to instruct the client institution on how to perform such services for itself. See also the Board of Governors' interpretation of bank management consulting advice (12 CFR 225.131).

[6] Financial organization refers to insured depository institution holding companies and their subsidiaries, other than nonbanking affiliates of diversified savings and loan holding companies that engage in activities not permissible under section 4(c)(8) of the Bank Holding Company Act (12 U.S.C. 1842(c)(8)).

[7] See also the Board's of Governors' interpretation on courier activities (12 CFR 225.129), which sets forth conditions for company entry into the activity.

[8] Extension of credit includes direct loans to borrowers, loans purchased from other lenders, and leases of real or personal property so long as the leases are nonoperating and full-payout leases that meet the requirements of paragraph (b)(2)(viii) of this section.

[9] Finance company includes all non-deposit-taking financial institutions that engage in a significant degree of consumer lending (excluding lending secured by first mortgages) and all financial institutions specifically defined by individual states as finance companies and that engage in a significant degree of consumer lending.

[10] These limitations increase at the end of each calendar year, beginning with 1982, by the percentage increase in the Consumer Price Index for Urban Wage Earners and Clerical Workers published by the Bureau of Labor Statistics.

[11] Nothing contained in this provision shall preclude a bank holding company subsidiary that is authorized to engage in a specific insurance-agency activity under this clause from continuing to engage in the particular activity after merger with an affiliate, if the merger is for legitimate business purposes and prior notice has been provided to the Board of Governors.

[12] For the purposes of this paragraph, activities engaged in on May 1, 1982, include activities

subsidiary engaging in a specific insurance agency activity under this clause may:

(*1*) Engage in such specific insurance agency activity only at locations:

(*i*) In the state in which the company has its principal place of business (as defined in 12 U.S.C. 1842(d));

(*ii*) In any state or states immediately adjacent to such state; and

(*iii*) In any state in which the specific insurance-agency activity was conducted (or was approved to be conducted) by such company or subsidiary thereof or by any other subsidiary of such company on May 1, 1982; and

(*2*) Provide other insurance coverages that may become available after May 1, 1982, so long as those coverages insure against the types of risks as (or are otherwise functionally equivalent to) coverages sold or approved to be sold on May 1, 1982, by the company or subsidiary.

(E) Supervision of retail insurance agents. Supervising on behalf of insurance underwriters the activities of retail insurance agents who sell:

(*1*) Fidelity insurance and property and casualty insurance on the real and personal property used in the operations of the company or its subsidiaries; and

(*2*) Group insurance that protects the employees of the company or its subsidiaries.

(F) Small companies. Engaging in any insurance-agency activity if the company has total consolidated assets of $50 million or less. A company performing insurance-agency activities under this paragraph may not engage in the sale of life insurance or annuities except as provided in paragraphs (b)(2)(xvi)(A) and (C) of this section, and it may not continue to engage in insurance-agency activities pursuant to this provision more than 90 days after the end of the quarterly reporting period in which total assets of the company and its subsidiaries exceed $50 million.

(G) Insurance-agency activities conducted before 1971. Engaging in any insurance-agency activity performed at any location in the United States directly or indirectly by a company that was engaged in insurance-agency activities prior to January 1, 1971, as a consequence of approval by the Board of Governors prior to January 1, 1971.

(xvii) Community development activities—(A) Financing and investment activities. Making equity and debt investments in corporations or projects designed primarily to promote community welfare, such as the economic rehabilitation and development of low-income areas by providing housing, services, or jobs for residents.

(B) Advisory activities. Providing advisory and related services for programs designed primarily to promote community welfare.

(xviii) Money orders, savings bonds, and traveler's checks. The issuance and sale at retail of money orders and similar consumer-type payment instruments; the sale of U.S. savings bonds; and the issuance and sale of traveler's checks.

(xix) Data processing. Providing data processing, data storage and data transmission services, facilities (including data processing, data storage and data transmission hardware, software, documentation, or operating personnel), databases, advice, and access to such services, facilities, or databases by any technological means, if the data to be processed, stored or furnished are financial, banking or economic.

(xx) Providing management consulting services, including to any person with respect to nonfinancial matters, so long as the management consulting services are advisory.

(xxi) Any activity that the Board had determined by an order that was in effect on November 12, 1999, to be so closely related to banking as to be a proper incident thereto. These activities are:

(A) Providing administrative and other services to mutual funds;

(B) Owning shares of a securities exchange;

(C) Acting as a certification authority for digital signatures and authenticating the identity of persons conducting financial and nonfinancial transactions;

(D) Providing employment histories to third parties for use in making credit decisions and to depository institutions and their affiliates for use in the ordinary course of business;

(E) Check cashing and wire transmission services;

(F) In connection with offering banking services, providing notary public services, selling postage stamps and postage-paid envelopes, providing vehicle registration services, and selling public transportation tickets and tokens; and

(G) Real estate title abstracting.

(xxii) Operating a travel agency in connection with financial services.

(xxiii) Organizing, sponsoring, and managing a mutual fund.

(xxiv) (A) Acting as a finder in bringing together one or more buyers and sellers of any product or service for transactions that the parties themselves negotiate and consummate, including providing any or all of the following services through any means—

(*1*) Identifying potential parties, making inquiries as to interest, introducing, and referring potential parties to each other, and arranging contacts between and meetings of interested parties;

(*2*) Conveying between interested parties expressions of interest, bids, offers, orders and confirmations relating to a transaction; and

(*3*) Transmitting information conveying products and services to potential parties in connection with the activities described paragraphs (A) and (B) of this section.

(B) The following are examples of the services that may be provided by a finder when done in accordance with paragraphs (b)(2)(xxiv)(A)(*1*)–(*3*) of this section. These examples are not exclusive.

(*1*) Hosting an electronic marketplace on the company's Internet web site by providing hypertext or similar links to the web sites of third party buyers or sellers.

(*2*) Hosting on the company's servers the Internet web site of—

(*i*) A buyer (or seller) that provides information concerning the buyer (or seller) and the products or services it seeks to buy (or sell) and allows sellers (or buyers) to submit expressions of interest, bids, offers, orders and confirmations relating to such products or services; or

(*ii*) A government or government agency that provides information concerning the services or benefits made available by the government or government agency, assists persons in completing applications to receive such services or benefits from the government or agency, and allows persons to transmit their applications for services or benefits to the government or agency.

(*3*) Operating an Internet web site that allows multiple buyers and sellers to exchange information concerning the products and services that they are willing to purchase or sell, locate potential counterparties for transactions, aggregate orders for goods or services with those made by other parties, and enter into transactions between themselves.

(*4*) Operating a telephone call center that provides permissible finder services.

---

carried on subsequently as the result of an application to engage in such activities pending before the Board of Governors on May 1, 1982, and approved subsequently by the Board of Governors or as the result of the acquisition by such company pursuant to a binding written contract entered into on or before May 1, 1982, of another company engaged in such activities at the time of the acquisition.

(C) To be acting as a finder for purposes of this section, the finder must comply with the following limitations.

(*1*) A finder may act only as an intermediary between a buyer and a seller.

(*2*) A finder may not bind any buyer or seller to the terms of a specific transaction or negotiate the terms of a specific transaction on behalf of a buyer or seller, except that a finder may—

(*i*) Arrange for buyers to receive preferred terms from sellers so long as the terms are not negotiated as part of any individual transaction, are provided generally to customers or broad categories of customers, and are made available by the seller (and not by the financial holding company); and

(*ii*) Establish rules of general applicability governing the use and operation of the finder service, including rules that govern the submission of bids and offers by buyers and sellers that use the finder service and the circumstances under which the finder service will match bids and offers submitted by buyers and sellers, and govern the manner in which buyers and sellers may bind themselves to the terms of a specific transaction.

(*3*) A finder may not—

(*i*) Take title to or acquire or hold an ownership interest in any product or service offered or sold through the finder service;

(*ii*) Provide distribution services for physical products or services offered or sold through the finder service;

(*iii*) Own or operate any real or personal property that is used for the purpose of manufacturing, storing, transporting, or assembling physical products offered or sold by third parties; or

(*iv*) Own or operate any real or personal property that serves as a physical location for the physical purchase, sale or distribution of products or services offered or sold by third parties.

(D) A finder must distinguish the products and services offered by the company from those offered by a third party through the finder service.

(xxv) Directly, or indirectly acquiring or controlling, whether as principal, on behalf of one or more entities, or otherwise, shares, assets, or ownership interests (including debt or equity securities, partnership interests, trust certificates, or other instruments representing ownership) of a company or other entity, whether or not constituting control of such company or entity if:

(A) Such shares, assets, or ownership interests are acquired and held as part of a bona fide underwriting or merchant or investment banking activity, including investment activities engaged in for the purpose of appreciation and ultimate resale or disposition of the investment;

(B) Such shares, assets, or ownership interests are held for a period of time to enable the sale or disposition thereof on a reasonable basis consistent with the financial viability of the activities described in clause (A) of this paragraph; and

(C) During the period such shares, assets, or ownership interests are held, the company does not routinely manage or operate such company or entity except as may be necessary or required to obtain a reasonable return on investment upon resale or disposition.

(xxvi) Directly or indirectly acquiring or controlling, whether as principal, on behalf of one or more entities, or otherwise, shares, assets, or ownership interests (including debt or equity securities, partnership interests, trust certificates or other instruments representing ownership) of a company or other entity, whether or not constituting control of such company or entity if—

(A) Such shares, assets, or ownership interests are acquired and held by an insurance company that is predominantly engaged in underwriting life, accident and health, or property and casualty insurance (other than credit-related insurance) or providing and issuing annuities;

(B) Such shares, assets, or ownership interests represent an investment made in the ordinary course of business of such insurance company in accordance with relevant State law governing such investments; and

(C) During the period such shares, assets, or ownership interests are held, the company does not routinely manage or operate such company except as may be necessary or required to obtain a reasonable return on investment.

(xxvii) Lending, exchanging, transferring, investing for others, or safeguarding financial assets other than money or securities.

(xxviii) Providing any device or other instrumentality for transferring money or other financial assets.

(xxix) Arranging, effecting, or facilitating financial transactions for the account of third parties.

(xxx) Ownership or control of one or more depository institutions.

(xxxi) Any other activity, wherever conducted, determined by the Board of Governors of the Federal Reserve System, in consultation with the Secretary of the Treasury, under section 4(k)(1)(A) of the Bank Holding Company Act (12 USC 1843(k)(1)(A)) to be financial in nature or incidental to a financial activity.

By order of the Board of Directors.

Dated at Washington, DC, this 12th day of June 2012.

Robert E. Feldman,

Executive Secretary, Federal Deposit Insurance Corporation.

[FR Doc. 2012–14701 Filed 6–15–12; 8:45 am]

BILLING CODE 6714–01–P

DEPARTMENT OF TRANSPORTATION

Federal Aviation Administration

14 CFR Part 39

[Docket No. FAA–2012–0597; Directorate Identifier 2012–NM–054–AD]

RIN 2120–AA64

Airworthiness Directives; The Boeing Company Airplanes

AGENCY: Federal Aviation Administration (FAA), DOT.

ACTION: Notice of proposed rulemaking (NPRM).

SUMMARY: We propose to adopt a new airworthiness directive (AD) for certain Boeing Company Model 777–200, –200LR, –300, and –300ER series airplanes. This proposed AD was prompted by reports of in-service events related to electrical power system malfunctions resulting in damage to electrical load management system (ELMS) P200 and P300 power panels and the surrounding area. This proposed AD would require installing enclosure trays to contain debris in certain ELMS panels, and replacing certain ELMS contactors. We are proposing this AD to prevent contactor failures, which could result in uncontained hot debris flow due to ELMS contactor breakdown, consequent smoke and heat damage to airplane structure and equipment during ground operations, and possible injuries to passengers and crew.

DATES: We must receive comments on this proposed AD by August 2, 2012.

ADDRESSES: You may send comments, using the procedures found in 14 CFR 11.43 and 11.45, by any of the following methods:

- *Federal eRulemaking Portal:* Go to *http://www.regulations.gov.* Follow the instructions for submitting comments.
- *Fax:* 202–493–2251.
- *Mail:* U.S. Department of Transportation, Docket Operations, M–30, West Building Ground Floor, Room W12–140, 1200 New Jersey Avenue SE., Washington, DC 20590.

• *Hand Delivery:* Deliver to Mail address above between 9 a.m. and 5 p.m., Monday through Friday, except Federal holidays.

For Boeing service information identified in this AD, contact Boeing Commercial Airplanes, Attention: Data & Services Management, P.O. Box 3707, MC 2H–65, Seattle, Washington 98124–2207; telephone 206–544–5000, extension 1; fax 206–766–5680; email *me.boecom@boeing.com;* Internet *https://www.myboeingfleet.com.* For Smiths Aerospace and GE Aviation service information identified in this AD, contact GE Aviation, Customer Support Center, 1 Neumann Way, Cincinnati, Ohio 45215; telephone: 513–552–3272; email: *cs.techpubs@ge.com;* Internet: *http://www.geaviation.com.* You may review copies of the referenced service information at the FAA, Transport Airplane Directorate, 1601 Lind Avenue SW., Renton, Washington. For information on the availability of this material at the FAA, call 425–227–1221.

Examining the AD Docket

You may examine the AD docket on the Internet at *http://www.regulations.gov;* or in person at the Docket Management Facility between 9 a.m. and 5 p.m., Monday through Friday, except Federal holidays. The AD docket contains this proposed AD, the regulatory evaluation, any comments received, and other information. The street address for the Docket Office (phone: 800–647–5527) is in the **ADDRESSES** section. Comments will be available in the AD docket shortly after receipt.

FOR FURTHER INFORMATION CONTACT: Georgios Roussos, Aerospace Engineer, Systems and Equipment Branch, ANM–130S, Seattle Aircraft Certification Office (ACO), FAA, 1601 Lind Avenue SW., Renton, Washington 98057–3356; telephone (425) 917–6482; fax (425) 917–6590; email: *georgios.roussos@faa.gov.*

SUPPLEMENTARY INFORMATION:

Comments Invited

We invite you to send any written relevant data, views, or arguments about this proposal. Send your comments to an address listed under the **ADDRESSES** section. Include ''Docket No. FAA–2012–0597; Directorate Identifier 2012–NM–054–AD'' at the beginning of your comments. We specifically invite comments on the overall regulatory, economic, environmental, and energy aspects of this proposed AD. We will consider all comments received by the closing date and may amend this proposed AD because of those comments.

We will post all comments we receive, without change, to *http://www.regulations.gov,* including any personal information you provide. We will also post a report summarizing each substantive verbal contact we receive about this proposed AD.

Discussion

We have received reports of in-service events related to electrical power system malfunctions that resulted in damage to ELMS P200 and P300 panels.

Some operators reported severe damage to ELMS panels. No in-flight contactor failures have been reported. Extended contactor operation at current close to maximum can lead to thermal degradation of the material in the contactor, which further reduces contactor protection and can lead to loose parts and consequent increased probability of electrical arcing. In addition, there was evidence of material buildup from normal operation of the contactor and the potential for foreign object debris, which could lead to short circuits within the contactor.

One operator reported that an airplane on the ground experienced smoke and heat damage from insulation blankets that smoldered after molten debris from a P200 ELMS power panel fell on the insulation blankets. When a contactor in the ELMS panel fails and overheats, the heat can cause molten debris to fall out of the panel. The bottom of the ELMS panel is open without protection to prevent hot debris from falling on to the insulation blankets and components below the panel.

These conditions could result in uncontained hot debris flow due to ELMS contactor breakdown, consequent smoke and heat damage to airplane structure and equipment during ground operations, and possible injuries to passengers and crew.

Relevant Service Information

We reviewed Boeing Special Attention Service Bulletin 777–24–0106, dated July 20, 2007, which describes procedures for installing enclosure trays for debris containment. The installation includes securing the tray with rivets onto the ELMS panel heat shield. Guidance on these procedures can be found in Smiths Service Bulletins 1000ELM–24–666, Revision 1, dated August 6, 2007; 2000ELM–24–667, Revision 1, dated August 13, 2007; and 3000ELM–24–668, Revision 1, dated August 13, 2007.

We also reviewed Boeing Special Attention Service Bulletin 777–24–0112, Revision 2, dated December 14, 2011, which describes procedures for replacing specified contactors in the ELMS P200 and P300 panels with new contactors. Guidance on these procedures can be found in GE Service Bulletins 2000ELM–24–697 and 3000ELM–24–698, both Revision 2, both dated February 3, 2011.

FAA's Determination

We are proposing this AD because we evaluated all the relevant information and determined the unsafe condition described previously is likely to exist or develop in other products of the same type design.

Proposed AD Requirements

This proposed AD would require accomplishing the actions specified in the service information described previously, except as discussed under ''Difference Between the Proposed AD and the Service Information.''

Difference Between the Proposed AD and the Service Information

Boeing Special Attention Service Bulletin 777–24–0106, dated July 20, 2007, recommends a compliance time of 60 months to install the enclosure trays for debris containment. We have determined that these trays must be installed sooner—within 36 months—to appropriately mitigate the identified unsafe condition. This difference has been coordinated with Boeing.

Costs of Compliance

We estimate that this proposed AD affects 128 airplanes of U.S. registry. We estimate the following costs to comply with this proposed AD:

ESTIMATED COSTS

Action	Labor cost	Parts cost	Cost per product	Cost on U.S. operators
Tray installation	3 work-hours × $85 per hour = $255	$1,729	$1,984	$253,952
Contactor replacement	6 work hours × $85 per hour = $510	49,317	49,827	6,377,856

Authority for This Rulemaking

Title 49 of the United States Code specifies the FAA's authority to issue rules on aviation safety. Subtitle I, section 106, describes the authority of the FAA Administrator. Subtitle VII: Aviation Programs, describes in more detail the scope of the Agency's authority.

We are issuing this rulemaking under the authority described in Subtitle VII, Part A, Subpart III, Section 44701: ''General requirements.'' Under that section, Congress charges the FAA with promoting safe flight of civil aircraft in air commerce by prescribing regulations for practices, methods, and procedures the Administrator finds necessary for safety in air commerce. This regulation is within the scope of that authority because it addresses an unsafe condition that is likely to exist or develop on products identified in this rulemaking action.

Regulatory Findings

We determined that this proposed AD would not have federalism implications under Executive Order 13132. This proposed AD would not have a substantial direct effect on the States, on the relationship between the national Government and the States, or on the distribution of power and responsibilities among the various levels of government.

For the reasons discussed above, I certify this proposed regulation:

(1) Is not a ''significant regulatory action'' under Executive Order 12866,

(2) Is not a ''significant rule'' under the DOT Regulatory Policies and Procedures (44 FR 11034, February 26, 1979),

(3) Will not affect intrastate aviation in Alaska, and

(4) Will not have a significant economic impact, positive or negative, on a substantial number of small entities under the criteria of the Regulatory Flexibility Act.

List of Subjects in 14 CFR Part 39

Air transportation, Aircraft, Aviation safety, Incorporation by reference, Safety.

The Proposed Amendment

Accordingly, under the authority delegated to me by the Administrator, the FAA proposes to amend 14 CFR part 39 as follows:

PART 39—AIRWORTHINESS DIRECTIVES

1. The authority citation for part 39 continues to read as follows:

Authority: 49 U.S.C. 106(g), 40113, 44701.

§ 39.13 [Amended]

2. The FAA amends § 39.13 by adding the following new airworthiness directive (AD):

The Boeing Company: Docket No. FAA–2012–0597; Directorate Identifier 2012–NM–054–AD.

(a) Comments Due Date

We must receive comments by August 2, 2012.

(b) Affected ADs

None.

(c) Applicability

This AD applies to The Boeing Company Model 777–200, –200LR, –300, and –300ER series airplanes; certificated in any category; as identified in Boeing Special Attention Service Bulletin 777–24–0106, dated July 20, 2007; and Boeing Special Attention Service Bulletin 777–24–0112, Revision 2, dated December 14, 2011.

(d) Subject

Joint Aircraft System Component (JASC)/Air Transport Association (ATA) of America Code 24, Electrical power.

(e) Unsafe Condition

This AD was prompted by reports of in-service events related to electrical power system malfunctions resulting in damage to electrical load management system (ELMS) P200 and P300 power panels and the surrounding area. We are issuing this AD to prevent contactor failures, which could result in uncontained hot debris flow due to ELMS contactor breakdown, consequent smoke and heat damage to airplane structure and equipment during ground operations, and possible injuries to passengers and crew.

(f) Compliance

Comply with this AD within the compliance times specified, unless already done.

(g) Tray Installation

For airplanes identified in Boeing Special Attention Service Bulletin 777–24–0106, dated July 20, 2007: Within 36 months after the effective date of this AD, install enclosure trays to contain debris in the ELMS panels, in accordance with the Accomplishment Instructions of Boeing Special Attention Service Bulletin 777–24–0106, dated July 20, 2007.

Note 1 to paragraph (g) of this AD: Guidance on the tray installation can be found in the service bulletins identified in the following paragraphs:

(1) Smiths Service Bulletin 1000ELM–24–666, Revision 1, dated August 6, 2007.

(2) Smiths Service Bulletin 2000ELM–24–667, Revision 1, dated August 13, 2007.

(3) Smiths Service Bulletin 3000ELM–24–668, Revision 1, dated August 13, 2007.

(h) Contactor Replacement

For airplanes identified in Boeing Special Attention Service Bulletin 777–24–0112, Revision 2, dated December 14, 2011: Within 60 months after the effective date of this AD, replace specified electrical power contactors in the ELMS P200 and P300 power panels with new contactors, in accordance with the Accomplishment Instructions of Boeing Special Attention Service Bulletin 777–24–0112, Revision 2, dated December 14, 2011.

Note 2 to paragraph (h) of this AD: Guidance on the contactor replacement procedures can be found in GE Service Bulletins 2000ELM–24–697 and 3000ELM–24–698, both Revision 2, both dated February 3, 2011.

(i) Credit for Previous Actions

This paragraph provides credit for the replacement of the ELMS contactors required by paragraph (h) of this AD, if those actions were performed before the effective date of this AD in accordance with Boeing Special Attention Service Bulletin 777–24–0112, dated February 19, 2009; or Revision 1, dated June 30, 2011.

(j) Parts Installation

As of the effective date of this AD, no person may install, on any airplane, a contactor having part number ELM827–1 in the ELMS panels and locations identified in this AD.

(k) Alternative Methods of Compliance (AMOCs)

(1) The Manager, Seattle Aircraft Certification Office (ACO), FAA, has the authority to approve AMOCs for this AD, if requested using the procedures found in 14 CFR 39.19. In accordance with 14 CFR 39.19, send your request to your principal inspector or local Flight Standards District Office, as appropriate. If sending information directly to the manager of the ACO, send it to the attention of the person identified in the Related Information section of this AD. Information may be emailed to: *9–ANM–Seattle-ACO–AMOC–Requests@faa.gov.*

(2) Before using any approved AMOC, notify your appropriate principal inspector, or lacking a principal inspector, the manager of the local flight standards district office/certificate holding district office.

(l) Related Information

(1) For more information about this AD, contact Georgios Roussos, Aerospace Engineer, Systems and Equipment Branch, ANM–130S, Seattle Aircraft Certification Office (ACO), FAA, 1601 Lind Avenue SW., Renton, Washington 98057–3356; telephone (425) 917–6482; fax (425) 917–6590; email: *georgios.roussos@faa.gov.*

(2) For Boeing service information identified in this AD, contact Boeing Commercial Airplanes, Attention: Data & Services Management, P.O. Box 3707, MC 2H–65, Seattle, Washington 98124–2207; telephone 206–544–5000, extension 1; fax 206–766–5680; email *me.boecom@boeing.com;* Internet *https://www.myboeingfleet.com.* For Smiths Aerospace and GE Aviation service information identified in this AD, contact GE Aviation, Customer Support Center, 1 Neumann Way, Cincinnati, Ohio 45215; telephone: 513–552–3272; email: *cs.techpubs@ge.com;* Internet: *http://www.geaviation.com.* You may review copies of the referenced service information at the

FAA, the FAA, Transport Airplane Directorate, 1601 Lind Avenue SW., Renton, Washington. For information on the availability of this material at the FAA, call 425–227–1221.

Issued in Renton, Washington, on June 7, 2012.

Michael Kaszycki,

Acting Manager, Transport Airplane Directorate, Aircraft Certification Service.

[FR Doc. 2012–14794 Filed 6–15–12; 8:45 am]

BILLING CODE 4910–13–P

DEPARTMENT OF TRANSPORTATION

Federal Aviation Administration

14 CFR Part 39

[Docket No. FAA–2012–0596; Directorate Identifier 2011–NM–245–AD]

RIN 2120–AA64

Airworthiness Directives; Airbus Airplanes

AGENCY: Federal Aviation Administration (FAA), DOT.

ACTION: Notice of proposed rulemaking (NPRM).

SUMMARY: We propose to adopt a new airworthiness directive (AD) for certain Airbus Model A330–200 freighter series airplanes, Model A330–200 and –300 series airplanes, and Model A340–200, –300, –500, and –600 series airplanes. This proposed AD was prompted by reports of the ram air turbine (RAT) not deploying when tested. This proposed AD would require identification of the supplier, part number, and serial number of the installed RAT actuator, and re-identification of the actuator and RAT, or replacement of the RAT actuator with a serviceable unit and re-identification of the RAT, if necessary. We are proposing this AD to prevent non-deployment of the RAT, which if occurred following a total engine flame-out, or during a total loss of normal electrical power generation, could result in reduced control of the airplane.

DATES: We must receive comments on this proposed AD by August 2, 2012.

ADDRESSES: You may send comments by any of the following methods:

- *Federal eRulemaking Portal:* Go to *http://www.regulations.gov.* Follow the instructions for submitting comments.
- *Fax:* (202) 493–2251.
- *Mail:* U.S. Department of Transportation, Docket Operations, M–30, West Building Ground Floor, Room W12–140, 1200 New Jersey Avenue SE., Washington, DC 20590.
- *Hand Delivery:* U.S. Department of Transportation, Docket Operations, M–30, West Building Ground Floor, Room W12–140, 1200 New Jersey Avenue SE., Washington, DC, between 9 a.m. and 5 p.m., Monday through Friday, except Federal holidays.

For Airbus service information identified in this proposed AD, contact Airbus SAS—Airworthiness Office—EAL, 1 Rond Point Maurice Bellonte, 31707 Blagnac Cedex, France; telephone +33 5 61 93 36 96; fax +33 5 61 93 45 80; email *airworthiness.A330-A340@airbus.com;* Internet *http://www.airbus.com.* For Hamilton Sunstrand service information identified in this proposed AD, contact Hamilton Sundstrand, Technical Publications, Mail Stop 302–9, 4747 Harrison Avenue, P.O. Box 7002, Rockford, Illinois 61125–7002; telephone 860–654–3575; fax 860–998–4564; email *tech.solutions@hs.utc.com;* Internet *http://www.hamiltonsundstrand.com.* You may review copies of the referenced service information at the FAA, Transport Airplane Directorate, 1601 Lind Avenue SW., Renton, Washington. For information on the availability of this material at the FAA, call 425–227–1221.

Examining the AD Docket

You may examine the AD docket on the Internet at *http://www.regulations.gov;* or in person at the Docket Operations office between 9 a.m. and 5 p.m., Monday through Friday, except Federal holidays. The AD docket contains this proposed AD, the regulatory evaluation, any comments received, and other information. The street address for the Docket Operations office (telephone (800) 647–5527) is in the **ADDRESSES** section. Comments will be available in the AD docket shortly after receipt.

FOR FURTHER INFORMATION CONTACT: Vladimir Ulyanov, Aerospace Engineer, International Branch, ANM–116, Transport Airplane Directorate, FAA. 1601 Lind Avenue SW., Renton, Washington 98057–3356; telephone (425) 227–1138; fax (425) 227–1149.

SUPPLEMENTARY INFORMATION:

Comments Invited

We invite you to send any written relevant data, views, or arguments about this proposed AD. Send your comments to an address listed under the **ADDRESSES** section. Include ''Docket No. FAA–2012–0596; Directorate Identifier 2011–NM–245–AD'' at the beginning of your comments. We specifically invite comments on the overall regulatory, economic, environmental, and energy aspects of this proposed AD. We will consider all comments received by the closing date and may amend this proposed AD based on those comments.

We will post all comments we receive, without change, to *http://www.regulations.gov,* including any personal information you provide. We will also post a report summarizing each substantive verbal contact we receive about this proposed AD.

Discussion

The European Aviation Safety Agency (EASA), which is the Technical Agent for the Member States of the European Community, has issued EASA Airworthiness Directive 2011–0204, dated October 14, 2011 (referred to after this as ''the MCAI''), to correct an unsafe condition for the specified products. The MCAI states:

> During a production test flight, a Ram Air Turbine (RAT) did not deploy when tested. An investigation, conducted by the RAT manufacturer Hamilton Sundstrand (HS) and Arkwin Industries, revealed that the RAT did not deploy due to insufficient stroke inside one of the actuator deployment solenoids.
>
> This condition, if occurring following a total engine flame out, or during a total loss of normal electrical power generation, could possibly result in reduced control of the aeroplane.
>
> For the reasons described above, this [EASA] AD requires the modification of the affected RAT actuator deployment mechanism, or replacement of the RAT actuator with a modified unit.

The required actions include identification of the supplier, part number, and serial number of the installed RAT actuator, and re-identification of the actuator and RAT, or replacement of the RAT actuator with a serviceable unit and re-identification of the RAT, if necessary. You may obtain further information by examining the MCAI in the AD docket.

Relevant Service Information

Airbus has issued the following service bulletins:

- Airbus Mandatory Service Bulletin A330–29–3114, dated May 18, 2011.
- Airbus Mandatory Service Bulletin A340–29–4089, dated May 18, 2011.
- Airbus Mandatory Service Bulletin A340–29–5018, dated May 18, 2011.

Hamilton Sundstrand has issued the following service bulletins:

- Hamilton Sundstrand Service Bulletin ERPS06M–29–18, dated March 8, 2011.
- Hamilton Sundstrand Service Bulletin ERPS33T–29–5, dated March 8, 2011.

The actions described in this service information are intended to correct the unsafe condition identified in the MCAI.

FAA's Determination and Requirements of This Proposed AD

This product has been approved by the aviation authority of another country, and is approved for operation in the United States. Pursuant to our bilateral agreement with the State of Design Authority, we have been notified of the unsafe condition described in the MCAI and service information referenced above. We are proposing this AD because we evaluated all pertinent information and determined an unsafe condition exists and is likely to exist or develop on other products of the same type design.

Costs of Compliance

Based on the service information, we estimate that this proposed AD would affect about 56 products of U.S. registry. We also estimate that it would take about 14 work-hours per product to comply with the basic requirements of this proposed AD. The average labor rate is $85 per work-hour. Required parts would cost about $0 per product. Where the service information lists required parts costs that are covered under warranty, we have assumed that there will be no charge for these parts. As we do not control warranty coverage for affected parties, some parties may incur costs higher than estimated here. Based on these figures, we estimate the cost of the proposed AD on U.S. operators to be $66,640, or $1,190 per product.

In addition, we estimate that any necessary follow-on actions would take about 13 work-hours and require parts costing $0, for a cost of $1,105 per product. We have no way of determining the number of products that may need these actions.

Authority for This Rulemaking

Title 49 of the United States Code specifies the FAA's authority to issue rules on aviation safety. Subtitle I, section 106, describes the authority of the FAA Administrator. ''Subtitle VII: Aviation Programs,'' describes in more detail the scope of the Agency's authority.

We are issuing this rulemaking under the authority described in ''Subtitle VII, Part A, Subpart III, Section 44701: General requirements.'' Under that section, Congress charges the FAA with promoting safe flight of civil aircraft in air commerce by prescribing regulations for practices, methods, and procedures the Administrator finds necessary for safety in air commerce. This regulation is within the scope of that authority because it addresses an unsafe condition that is likely to exist or develop on products identified in this rulemaking action.

Regulatory Findings

We determined that this proposed AD would not have federalism implications under Executive Order 13132. This proposed AD would not have a substantial direct effect on the States, on the relationship between the national Government and the States, or on the distribution of power and responsibilities among the various levels of government.

For the reasons discussed above, I certify this proposed regulation:

1. Is not a ''significant regulatory action'' under Executive Order 12866;

2. Is not a ''significant rule'' under the DOT Regulatory Policies and Procedures (44 FR 11034, February 26, 1979);

3. Will not affect intrastate aviation in Alaska; and

4. Will not have a significant economic impact, positive or negative, on a substantial number of small entities under the criteria of the Regulatory Flexibility Act.

We prepared a regulatory evaluation of the estimated costs to comply with this proposed AD and placed it in the AD docket.

List of Subjects in 14 CFR Part 39

Air transportation, Aircraft, Aviation safety, Incorporation by reference, Safety.

The Proposed Amendment

Accordingly, under the authority delegated to me by the Administrator, the FAA proposes to amend 14 CFR part 39 as follows:

PART 39—AIRWORTHINESS DIRECTIVES

1. The authority citation for part 39 continues to read as follows:

Authority: 49 U.S.C. 106(g), 40113, 44701.

§ 39.13 [Amended]

2. The FAA amends § 39.13 by adding the following new AD:

Airbus: Docket No. FAA–2012–0596; Directorate Identifier 2011–NM–245–AD.

(a) Comments Due Date

We must receive comments by August 2, 2012.

(b) Affected ADs

None.

(c) Applicability

This AD applies to the airplanes identified in paragraphs (c)(1) and (c)(2) of this AD; certificated in any category.

(1) Airbus Model A330–201, –202, –203, –223, –243, –223F –243F, –301, –302, –303, –321, –322, –323, –341, –342, and –343 airplanes, all manufacturer serial numbers (MSN); except those on which Airbus modification 201043 has been embodied in production.

(2) Airbus Model A340–211, –212, –213, –311, –312, –313, –541, and –642 airplanes, all MSN; except those on which Airbus modification 201043 or 201042 has been embodied in production.

(d) Subject

Air Transport Association (ATA) of America Code 29: Hydraulic Power.

(e) Reason

This AD was prompted by reports of the ram air turbine (RAT) not deploying when tested. We are issuing this AD to prevent non-deployment of the RAT, which if occurred following a total engine flame-out, or during a total loss of normal electrical power generation, could result in reduced control of the airplane.

(f) Compliance

You are responsible for having the actions required by this AD performed within the compliance times specified, unless the actions have already been done.

(g) Identification and Replacement for Certain Airbus Model A330, and A340–200 and –300 Airplanes

(1) For Airbus Model A330–200 freighter series, A330–200 and –300 series airplanes, and Model A340–200 and –300 series airplanes: Within 15,000 flight hours or 36 months, whichever occurs first after the effective date of this AD, identify the supplier, part number, and serial number of the installed RAT actuator, in accordance with the Accomplishment Instructions of Airbus Mandatory Service Bulletin A330–29–3114, dated May 18, 2011 (for Model A330–200 freighter series airplanes, Model A330–200 and –300 series airplanes); or Airbus Mandatory Service Bulletin A340–29–4089, dated May 18, 2011 (for Model A340–200 and –300 series airplanes).

(i) If the supplier identified is Arkwin, and the identified actuator part number and serial number are listed as already modified in Hamilton Sundstrand Service Bulletin ERPS06M–29–18, dated March 8, 2011, but not yet re-identified, before further flight, re-identify the actuator and the RAT, in accordance with the Accomplishment Instructions of Airbus Mandatory Service Bulletin A330–29–3114, dated May 18, 2011 (for Model A330–200 freighter series airplanes, Model A330–200 and –300 series airplanes); or Airbus Mandatory Service Bulletin A340–29–4089, dated May 18, 2011 (for Model A340–200 and –300 series airplanes).

(ii) If the supplier identified is Arkwin and the identified actuator part number and serial number are listed as not modified in Hamilton Sundstrand Service Bulletin ERPS06M–29–18, dated March 8, 2011, before further flight, replace the RAT actuator with a serviceable unit, and re-identify the RAT, in accordance with the Accomplishment Instructions of Airbus Mandatory Service Bulletin A330–29–3114, dated May 18, 2011 (for Model A330–200 freighter series airplanes, Model A330–200

and –300 series airplanes); or Airbus Mandatory Service Bulletin A340–29–4089, dated May 18, 2011 (for Model A340–200 and –300 series airplanes).

(h) Identification and Replacement for Certain Airbus Model A340–500 and –600 Airplanes

(1) For Model A340–500 and -600 Airplanes: Within 15,000 flight hours or 36 months, whichever occurs first after the effective date of this AD, identify the part number and serial number of the installed RAT actuator, in accordance with the Accomplishment Instructions of Airbus Mandatory Service Bulletin A340–29–5018, dated May 18, 2011.

(i) If the identified actuator part number and serial number are listed as already modified in Hamilton Sundstrand Service Bulletin ERPS33T–29–5, dated March 8, 2011, but not yet re-identified, before further flight, re-identify the actuator and the RAT, in accordance with the Accomplishment Instructions of Airbus Mandatory Service Bulletin A340–29–5018, dated May 18, 2011.

(ii) If the identified actuator part number and serial number are listed as not modified in Hamilton Sundstrand Service Bulletin ERPS33T–29–5, dated March 8, 2011, before further flight, replace the RAT actuator with a serviceable unit, and re-identify the RAT, in accordance with the Accomplishment Instructions of Airbus Mandatory Service Bulletin A340–29–5018, dated May 18, 2011.

(i) Parts Installation

(1) As of the effective date of this AD, no person may install any RAT actuator having part number (P/N) 5912958 or P/N 1211575–001, or any RAT having P/N 1702934A having a serial number listed as affected in Hamilton Sundstrand Service Bulletin ERPS06M–29–18, dated March 8, 2011, on any airplane, unless the RAT actuator has been replaced with a serviceable unit and the RAT has been re-identified, as applicable, in accordance with the Accomplishment Instructions of Airbus Mandatory Service Bulletin A330–29–3114, dated May 18, 2011 (for Model A330–200 freighter series airplanes, Model A330–200 and –300 series airplanes); or Airbus Mandatory Service Bulletin A340–29–4089, dated May 18, 2011 (for Model A340–200 and –300 series airplanes).

(2) As of the effective date of this AD, no person may install any RAT actuator having P/N 5912536 or P/N 1211526–002, or any RAT having P/N 772722F having a serial number listed as affected in Hamilton Sundstrand Service Bulletin ERPS33T–29–5, dated March 8, 2011, on any airplane, unless the RAT actuator has been replaced with a serviceable unit and the RAT has been re-identified, as applicable, in accordance with the Accomplishment Instructions of Airbus Mandatory Service Bulletin A340–29–5018, dated May 18, 2011.

(j) Other FAA AD Provisions

The following provisions also apply to this AD:

(1) Alternative Methods of Compliance (AMOCs): The Manager, International Branch, FAA, has the authority to approve AMOCs for this AD, if requested using the procedures found in 14 CFR 39.19. In accordance with 14 CFR 39.19, send your request to your principal inspector or local Flight Standards District Office, as appropriate. If sending information directly to the International Branch, send it to ATTN: Vladimir Ulyanov, Aerospace Engineer, International Branch, ANM–116, Transport Airplane Directorate, FAA 1601 Lind Avenue SW., Renton, Washington 98057–3356; telephone (425) 227–1138; fax (425) 227–1149. Information may be emailed to: *9-ANM-116-AMOC-REQUESTS@faa.gov.* Before using any approved AMOC, notify your appropriate principal inspector, or lacking a principal inspector, the manager of the local flight standards district office/certificate holding district office. The AMOC approval letter must specifically reference this AD.

(2) Airworthy Product: For any requirement in this AD to obtain corrective actions from a manufacturer or other source, use these actions if they are FAA-approved. Corrective actions are considered FAA-approved if they are approved by the State of Design Authority (or their delegated agent). You are required to assure the product is airworthy before it is returned to service.

(k) Related Information

(1) Refer to MCAI European Aviation Safety Agency Airworthiness Directive 2011–0204, dated October 14, 2011; and the service information specified in paragraphs (k)(1)(i), (k)(1)(ii), (k)(1)(iii), (k)(1)(iv), and (k)(1)(v) of this AD; for related information.

(i) Airbus Mandatory Service Bulletin A330–29–3114, dated May 18, 2011.

(ii) Airbus Mandatory Service Bulletin A340–29–4089, dated May 18, 2011.

(iii) Airbus Mandatory Service Bulletin A340–29–5018, dated May 18, 2011.

(iv) Hamilton Sundstrand Service Bulletin ERPS06M–29–18, dated March 8, 2011.

(v) Hamilton Sundstrand Service Bulletin ERPS33T–29–5, dated March 8, 2011.

(2) For Airbus service information identified in this AD, contact Airbus SAS—Airworthiness Office—EAL, 1 Rond Point Maurice Bellonte, 31707 Blagnac Cedex, France; telephone +33 5 61 93 36 96; fax +33 5 61 93 45 80; email *airworthiness.A330-A340@airbus.com;* Internet *http://www.airbus.com.* For Hamilton Sunstrand service information identified in this AD, contact Hamilton Sundstrand, Technical Publications, Mail Stop 302–9, 4747 Harrison Avenue, P.O. Box 7002, Rockford, Illinois 61125–7002; telephone 860–654–3575; fax 860–998–4564; email *tech.solutions@hs.utc.com;* Internet *http://www.hamiltonsundstrand.com.* You may review copies of the referenced service information at the FAA, Transport Airplane Directorate, 1601 Lind Avenue SW., Renton, Washington. For information on the availability of this material at the FAA, call 425–227–1221.

Issued in Renton, Washington, on June 6, 2012.

Michael Kaszycki,

Acting Manager, Transport Airplane Directorate, Aircraft Certification Service.

[FR Doc. 2012–14796 Filed 6–15–12; 8:45 am]

BILLING CODE 4910–13–P

DEPARTMENT OF TRANSPORTATION

Federal Aviation Administration

14 CFR Part 39

[Docket No. FAA–2012–0636; Directorate Identifier 2012–NM–037–AD]

RIN 2120–AA64

Airworthiness Directives; Airbus Airplanes

AGENCY: Federal Aviation Administration (FAA), DOT.

ACTION: Notice of proposed rulemaking (NPRM).

SUMMARY: We propose to adopt a new airworthiness directive (AD) for certain Airbus Model A300 B4–601, B4–603, and B4–605R airplanes, Model A300 F4–605R airplanes, Model A300 C4–605R Variant F airplanes, and Model A310–204 and –304 airplanes, powered by General Electric (GE) CF6–80C2 series engines. This proposed AD was prompted by reports of two single-engine flame-out events during inclement weather. This proposed AD would require installing a shunt of the rotary selector (introducing an auto-relight function). We are proposing this AD to prevent a long engine restart sequence after a non-selection of continuous re-light by the crew and a flame-out event of both engines, which could result in reduced controllability of the airplane, especially at low altitude.

DATES: We must receive comments on this proposed AD by August 2, 2012.

ADDRESSES: You may send comments by any of the following methods:

- *Federal eRulemaking Portal:* Go to *http://www.regulations.gov.* Follow the instructions for submitting comments.
- *Fax:* (202) 493–2251.
- *Mail:* U.S. Department of Transportation, Docket Operations, M–30, West Building Ground Floor, Room W12–140, 1200 New Jersey Avenue SE., Washington, DC 20590.
- *Hand Delivery:* U.S. Department of Transportation, Docket Operations, M–30, West Building Ground Floor, Room W12–140, 1200 New Jersey Avenue SE., Washington, DC, between 9 a.m. and 5 p.m., Monday through Friday, except Federal holidays.

For service information identified in this proposed AD, contact Airbus SAS—EAW (Airworthiness Office), 1 Rond Point Maurice Bellonte, 31707 Blagnac Cedex, France; telephone +33 5 61 93 36 96; fax +33 5 61 93 44 51; email *account.airworth-eas@airbus.com;* Internet *http://www.airbus.com.*

You may review copies of the referenced service information at the

FAA, Transport Airplane Directorate, 1601 Lind Avenue SW., Renton, Washington. For information on the availability of this material at the FAA, call 425–227–1221.

Examining the AD Docket

You may examine the AD docket on the Internet at *http://www.regulations.gov;* or in person at the Docket Operations office between 9 a.m. and 5 p.m., Monday through Friday, except Federal holidays. The AD docket contains this proposed AD, the regulatory evaluation, any comments received, and other information. The street address for the Docket Operations office (telephone (800) 647–5527) is in the **ADDRESSES** section. Comments will be available in the AD docket shortly after receipt.

FOR FURTHER INFORMATION CONTACT: Dan Rodina, Aerospace Engineer, International Branch, ANM–116, Transport Airplane Directorate, FAA, 1601 Lind Avenue SW., Renton, Washington 98057–3356; telephone (425) 227–2125; fax (425) 227–1149.

SUPPLEMENTARY INFORMATION:

Comments Invited

We invite you to send any written relevant data, views, or arguments about this proposed AD. Send your comments to an address listed under the **ADDRESSES** section. Include ''Docket No. FAA–2012–0636; Directorate Identifier 2012–NM–037–AD'' at the beginning of your comments. We specifically invite comments on the overall regulatory, economic, environmental, and energy aspects of this proposed AD. We will consider all comments received by the closing date and may amend this proposed AD based on those comments.

We will post all comments we receive, without change, to *http://www.regulations.gov,* including any personal information you provide. We will also post a report summarizing each substantive verbal contact we receive about this proposed AD.

Discussion

The European Aviation Safety Agency (EASA), which is the Technical Agent for the Member States of the European Community, has issued EASA Airworthiness Directive 2011–0113, dated June 17, 2011 (referred to after this as ''the MCAI''), to correct an unsafe condition for the specified products. The MCAI states:

> Two single [engine] flame out events attributed to inclement weather occurred on Wide Body (WB) aeroplanes powered with GE CF6–80C2 engines.
>
> On WB aeroplanes, no auto-relight function is embodied. To avoid long engine restart sequence after a non selection of continuous relight by the crew and a flame out event of both engines, resulting in strongly reduced control of the aeroplane especially at low altitude, the manufacturer Airbus designed a modification by introducing auto-relight function for aeroplanes powered by GE CF6–80C2 engines.
>
> For the reason described above, this EASA AD requires the installation on the aeroplane of an auto-relight function [installing a shunt of the rotary selector] as a precaution and to increase restart capability without crew action.

You may obtain further information by examining the MCAI in the AD docket.

Relevant Service Information

Airbus has issued Mandatory Service Bulletin A310–74–2003, Revision 02, including Appendix 1, dated February 9, 2012 (for Model A310–204 and –304 airplanes); and Mandatory Service Bulletin A300–74–6003, Revision 02, including Appendix 1, dated February 9, 2012 (for Model A300 B4–601, B4–603, and B4–605R airplanes, Model A300 F4–605R airplanes, and Model A300 C4–605R Variant F airplanes). The actions described in this service information are intended to correct the unsafe condition identified in the MCAI.

FAA's Determination and Requirements of This Proposed AD

This product has been approved by the aviation authority of another country, and is approved for operation in the United States. Pursuant to our bilateral agreement with the State of Design Authority, we have been notified of the unsafe condition described in the MCAI and service information referenced above. We are proposing this AD because we evaluated all pertinent information and determined an unsafe condition exists and is likely to exist or develop on other products of the same type design.

Costs of Compliance

Based on the service information, we estimate that this proposed AD would affect about 47 products of U.S. registry. We also estimate that it would take about 80 work-hours per product to comply with the basic requirements of this proposed AD. The average labor rate is $85 per work-hour. Required parts would cost about $12,500 per product. Where the service information lists required parts costs that are covered under warranty, we have assumed that there will be no charge for these parts. As we do not control warranty coverage for affected parties, some parties may incur costs higher than estimated here. Based on these figures, we estimate the cost of the proposed AD on U.S. operators to be $907,100, or $19,300 per product.

Authority for This Rulemaking

Title 49 of the United States Code specifies the FAA's authority to issue rules on aviation safety. Subtitle I, section 106, describes the authority of the FAA Administrator. ''Subtitle VII: Aviation Programs,'' describes in more detail the scope of the Agency's authority.

We are issuing this rulemaking under the authority described in ''Subtitle VII, Part A, Subpart III, Section 44701: General requirements.'' Under that section, Congress charges the FAA with promoting safe flight of civil aircraft in air commerce by prescribing regulations for practices, methods, and procedures the Administrator finds necessary for safety in air commerce. This regulation is within the scope of that authority because it addresses an unsafe condition that is likely to exist or develop on products identified in this rulemaking action.

Regulatory Findings

We determined that this proposed AD would not have federalism implications under Executive Order 13132. This proposed AD would not have a substantial direct effect on the States, on the relationship between the national Government and the States, or on the distribution of power and responsibilities among the various levels of government.

For the reasons discussed above, I certify this proposed regulation:

1. Is not a ''significant regulatory action'' under Executive Order 12866;
2. Is not a ''significant rule'' under the DOT Regulatory Policies and Procedures (44 FR 11034, February 26, 1979);
3. Will not affect intrastate aviation in Alaska; and
4. Will not have a significant economic impact, positive or negative, on a substantial number of small entities under the criteria of the Regulatory Flexibility Act.

We prepared a regulatory evaluation of the estimated costs to comply with this proposed AD and placed it in the AD docket.

List of Subjects in 14 CFR Part 39

Air transportation, Aircraft, Aviation safety, Incorporation by reference, Safety.

The Proposed Amendment

Accordingly, under the authority delegated to me by the Administrator, the FAA proposes to amend 14 CFR part 39 as follows:

PART 39—AIRWORTHINESS DIRECTIVES

1. The authority citation for part 39 continues to read as follows:

Authority: 49 U.S.C. 106(g), 40113, 44701.

§ 39.13 [Amended]

2. The FAA amends § 39.13 by adding the following new AD:

Airbus: Docket No. FAA–2012–0636; Directorate Identifier 2012–NM–037–AD.

(a) Comments Due Date

We must receive comments by August 2, 2012.

(b) Affected ADs

None.

(c) Applicability

This AD applies to Airbus Model A300 B4–601, B4–603, and B4–605R airplanes Model A300 F4–605R airplanes, Model A300 C4–605R Variant F airplanes, and Model A310–204 and –304 airplanes; certificated in any category; all serial numbers, powered by General Electric (GE) CF6–80C2 series engines.

(d) Subject

Air Transport Association (ATA) of America Code 74: Ignition.

(e) Reason

This AD was prompted by reports of two single-engine flame-out events during inclement weather. We are issuing this AD to prevent a long engine restart sequence after a non-selection of continuous re-light by the crew and a flame-out event of both engines, which could result in reduced controllability of the airplane, especially at low altitude.

(f) Compliance

You are responsible for having the actions required by this AD performed within the compliance times specified, unless the actions have already been done.

(g) Modification

Within 6,000 flight hours or 30 months after the effective date of this AD, whichever occurs later: Modify the airplane by installing a shunt of the rotary selector (introducing an auto-relight function), in accordance with the Accomplishment Instructions of Airbus Mandatory Service Bulletin A300–74–6003, Revision 02, including Appendix 1, dated February 9, 2012 (for Model A300 B4–601, B4–603, and B4–605R airplanes, Model A300 F4–605R airplanes, and Model A300 C4–605R Variant F airplanes); or Airbus Mandatory Service Bulletin A310–74–2003, Revision 02, including Appendix 1, dated February 9, 2012 (for Model A310–204 and –304 airplanes).

(h) Credit for Previous Actions

This paragraph provides credit for the actions required by paragraph (g) of this AD, if those actions were performed before the effective date of this AD using the applicable service information specified in paragraphs (h)(1) or (h)(2) of this AD.

(1) Airbus Mandatory Service Bulletin A300–74–6003, Revision 01, including Appendix 1, dated April 1, 2011 (for Model A300 B4–601, B4–603, and B4–605R airplanes, Model A300 F4–605R, and Model A300 C4–605R Variant F airplanes).

(2) Airbus Mandatory Service Bulletin A310–74–2003, Revision 01, including Appendix 1, dated April 1, 2011 (for Model A310–204 and –304 airplanes).

(i) Other FAA AD Provisions

The following provisions also apply to this AD:

(1) Alternative Methods of Compliance (AMOCs): The Manager, International Branch, ANM–116, FAA, has the authority to approve AMOCs for this AD, if requested using the procedures found in 14 CFR 39.19. In accordance with 14 CFR 39.19, send your request to your principal inspector or local Flight Standards District Office, as appropriate. If sending information directly to the International Branch send it to ATTN: Dan Rodina, Aerospace Engineer, International Branch, ANM–116, Transport Airplane Directorate, FAA, 1601 Lind Avenue SW., Renton, Washington 98057–3356; telephone (425) 227–2125; fax (425) 227–1149. Information may be emailed to: *9-ANM-116-AMOC-REQUESTS@faa.gov.* Before using any approved AMOC, notify your appropriate principal inspector, or lacking a principal inspector, the manager of the local flight standards district office/certificate holding district office. The AMOC approval letter must specifically reference this AD.

(2) Airworthy Product: For any requirement in this AD to obtain corrective actions from a manufacturer or other source, use these actions if they are FAA-approved. Corrective actions are considered FAA-approved if they are approved by the State of Design Authority (or their delegated agent). You are required to assure the product is airworthy before it is returned to service.

(j) Related Information

Refer to MCAI EASA Airworthiness Directive 2011–0113, dated June 17, 2011; and the service information specified in paragraph (j)(1) and (j)(2) of this AD; for related information.

(1) Airbus Mandatory Service Bulletin A300–74–6003, Revision 02, including Appendix 1, dated February 9, 2012.

(2) Airbus Mandatory Service Bulletin A310–74–2003, Revision 02, including Appendix 1, dated February 9, 2012.

Issued in Renton, Washington, on June 7, 2012.

Michael Kaszycki,

Acting Manager, Transport Airplane Directorate, Aircraft Certification Service.

[FR Doc. 2012–14798 Filed 6–15–12; 8:45 am]

BILLING CODE 4910–13–P

DEPARTMENT OF TRANSPORTATION

Federal Aviation Administration

14 CFR Part 39

[Docket No. FAA–2012–0630; Directorate Identifier 2011–SW–010–AD]

RIN 2120–AA64

Airworthiness Directives; Eurocopter France Helicopters

AGENCY: Federal Aviation Administration (FAA), DOT.

ACTION: Notice of proposed rulemaking (NPRM).

SUMMARY: We propose to adopt a new airworthiness directive (AD) for Eurocopter France EC130B4 helicopters. This proposed AD is prompted by an in-flight cracking and failure of a center windscreen. The proposed actions are intended to detect a crack in the blending radii of the center windscreen to prevent failure of the windscreen, injury to the flight crew, and subsequent loss of control of the helicopter.

DATES: We must receive comments on this proposed AD by August 17, 2012.

ADDRESSES: You may send comments by any of the following methods:

- *Federal eRulemaking Docket:* Go to *http://www.regulations.gov.* Follow the online instructions for sending your comments electronically.
- *Fax:* 202–493–2251.
- *Mail:* Send comments to the U.S. Department of Transportation, Docket Operations, M–30, West Building Ground Floor, Room W12–140, 1200 New Jersey Avenue SE., Washington, DC 20590–0001.
- *Hand Delivery:* Deliver to the ''Mail'' address between 9 a.m. and 5 p.m., Monday through Friday, except Federal holidays.

Examining the AD Docket: You may examine the AD docket on the Internet at *http://www.regulations.gov* or in person at the Docket Operations Office between 9 a.m. and 5 p.m., Monday through Friday, except Federal holidays. The AD docket contains this proposed AD, the economic evaluation, any comments received, and other information. The street address for the Docket Operations Office (telephone 800–647–5527) is in the **ADDRESSES** section. Comments will be available in the AD docket shortly after receipt.

For service information identified in this proposed AD, contact American Eurocopter Corporation, 2701 N. Forum Drive, Grand Prairie, TX 75052, telephone (972) 641–0000 or (800) 232–0323, fax (972) 641–3775, or at *http://www.eurocopter.com/techpub.* You may

review a copy of the referenced service information at the FAA, Office of the Regional Counsel, Southwest Region, 2601 Meacham Blvd., Room 663, Fort Worth, Texas 76137.

FOR FURTHER INFORMATION CONTACT: Jim Grigg, Manager, Safety Management Group, Rotorcraft Directorate, FAA, 2601 Meacham Blvd., Fort Worth, TX 76137; telephone (817) 222–5110; email *jim.grigg@faa.gov.*

SUPPLEMENTARY INFORMATION:

Comments Invited

We invite you to participate in this rulemaking by submitting written comments, data, or views. We also invite comments relating to the economic, environmental, energy, or federalism impacts that might result from adopting the proposals in this document. The most helpful comments reference a specific portion of the proposal, explain the reason for any recommended change, and include supporting data. To ensure the docket does not contain duplicate comments, commenters should send only one copy of written comments, or if comments are filed electronically, commenters should submit only one time.

We will file in the docket all comments that we receive, as well as a report summarizing each substantive public contact with FAA personnel concerning this proposed rulemaking. Before acting on this proposal, we will consider all comments we receive on or before the closing date for comments. We will consider comments filed after the comment period has closed if it is possible to do so without incurring expense or delay. We may change this proposal in light of the comments we receive.

Discussion

The European Aviation Safety Agency (EASA), which is the Technical Agent for the Member States of the European Union, has issued AD 2010–0258, dated December 6, 2010, (AD 2010–0258) to correct an unsafe condition for the Eurocopter France EC130B4 helicopters. EASA states that it received reports that center windscreen panels failed during flights. Investigations revealed this failure was caused by a crack that started in the blending radius between the lower and upper sections of the windscreen. It states that this condition, if not detected and corrected, could result in serious injury of the helicopter occupants. Consequently, EASA issued Emergency AD 2007–0219–E, dated August 24, 2007, (AD 2007–0219–E), requiring a pre-flight inspection of the center windscreen, repair or replacement of a cracked windscreen (with ones of the same design), and an airspeed limitation when in-flight distortion of the windscreen had been observed. On April 8, 2009, EASA approved a modification (MOD 073590) for the EC130B4 which incorporates a newly designed center windscreen panel, part number (P/N) 350A25–9045–20, to ''eliminate the possibility of centre windshield cracks thus providing an alternative terminating action for the preflight inspections.''

FAA's Determination

This helicopter model is manufactured in France and is type certificated for operation in the United States under the provisions of 14 CFR 21.29 and the applicable bilateral agreement. Pursuant to the applicable bilateral agreement, EASA has kept the FAA informed of the situation described above. The FAA has examined the findings of EASA, reviewed all available information, and determined that AD action is necessary for products of this type design that are certificated for operation in the United States.

We are proposing this AD because we evaluated all known relevant information and determined that an unsafe condition exists and is likely to exist or develop on other products of this same type design.

Related Service Information

We reviewed Eurocopter Emergency Alert Service Bulletin (ASB) No. 05A005 Revision 2, dated November 22, 2010. The ASB specifies:

- Performing a visual check of the center windscreen before each flight.
- Replacing any center windscreen before resuming flight if a crack is detected.
- If in-flight distortion is found, immediately restricting airspeed to 70 knots or below, and
  - ○ If a crack is found, before next flight, replacing the windscreen per Eurocopter Service Bulletin 56–003, dated November 16, 2010, (SB 56–003), which describes procedures to perform MOD 073590, and
  - ○ If no crack is found, affixing an airspeed limitation label and within 50 flying hours or 15 days, whichever is earlier, replacing the windscreen per MOD 073590.
- That incorporation of MOD 073590 is an alternative to the bulletin, relieving users of the inspection requirements.

EASA has classified this ASB as mandatory and issued AD 2010–0258 to ensure the continued airworthiness of these helicopters.

Proposed AD Requirements

This proposed AD would require:

- Before each flight, visually checking the center windscreen, closely examining the blending radii between the upper and lower parts of the windscreen. An owner/operator (pilot) may perform the visual check required by this proposed AD and must enter compliance with that paragraph into the helicopter maintenance records in accordance with 14 CFR 43.9(a)(1)–(4) and 91.417(a)(2)(v). A pilot may perform this check because it involves only a visual check for a crack in the center windscreen and can be performed equally well by a pilot or a mechanic.
- If a crack exists in the center windscreen panel, or if the windscreen distorts during flight, replacing the center windscreen panel before further flight.
- Within 12 months of the effective date of the proposed AD, unless accomplished previously, replacing the center windscreen with P/N 350A259045.20. Replacing the center windscreen panel with P/N 350A259045.20 would constitute terminating action for the inspection requirements of this proposed AD. The proposed actions would be required to be accomplished by following specific portions of the ASB described previously.

Differences Between This Proposed AD and the EASA AD

The EASA AD imposes flight restrictions and replacing the windscreen within 50 flight hours or 15 days, whichever occurs first, if distortion of the windscreen is detected in-flight. The proposed AD would mandate replacing the windscreen before further flight if distortion occurs during flight. In addition, the proposed AD would mandate MOD 073590 and replacing the affected windscreen with an airworthy windscreen, P/N 350A25–9045–20, within 12 months.

Costs of Compliance

We estimate that this proposed AD would affect 87 helicopters of U.S. registry and that labor costs would average $85 per work-hour. Therefore, we estimate the following costs to comply with this AD:

- The check of the center windscreen before each flight would take about 15 minutes for a labor cost of $21.25 per inspection. No parts would be needed, so that the total cost for the U.S. 87-helicopter fleet would be about $1,849 per inspection.
- Replacing the center windscreen would require about 20 work-hours for

a labor cost of $1,700 per helicopter. Parts would cost $6,037 for a total cost per helicopter of $7,737.

Authority for This Rulemaking

Title 49 of the United States Code specifies the FAA's authority to issue rules on aviation safety. Subtitle I, section 106, describes the authority of the FAA Administrator. ''Subtitle VII: Aviation Programs,'' describes in more detail the scope of the Agency's authority.

We are issuing this rulemaking under the authority described in ''Subtitle VII, Part A, Subpart III, Section 44701: General requirements.'' Under that section, Congress charges the FAA with promoting safe flight of civil aircraft in air commerce by prescribing regulations for practices, methods, and procedures the Administrator finds necessary for safety in air commerce. This regulation is within the scope of that authority because it addresses an unsafe condition that is likely to exist or develop on products identified in this rulemaking action.

Regulatory Findings

We determined that this proposed AD would not have federalism implications under Executive Order 13132. This proposed AD would not have a substantial direct effect on the States, on the relationship between the national Government and the States, or on the distribution of power and responsibilities among the various levels of government.

For the reasons discussed, I certify this proposed regulation:

1. Is not a ''significant regulatory action'' under Executive Order 12866;
2. Is not a ''significant rule'' under the DOT Regulatory Policies and Procedures (44 FR 11034, February 26, 1979);
3. Will not affect intrastate aviation in Alaska to the extent that it justifies making a regulatory distinction; and
4. Will not have a significant economic impact, positive or negative, on a substantial number of small entities under the criteria of the Regulatory Flexibility Act.

We prepared an economic evaluation of the estimated costs to comply with this proposed AD and placed it in the AD docket.

List of Subjects in 14 CFR Part 39

Air transportation, Aircraft, Aviation safety, Incorporation by reference, Safety.

The Proposed Amendment

Accordingly, under the authority delegated to me by the Administrator, the FAA proposes to amend 14 CFR part 39 as follows:

PART 39—AIRWORTHINESS DIRECTIVES

1. The authority citation for part 39 continues to read as follows:

Authority: 49 U.S.C. 106(g), 40113, 44701.

§ 39.13 [Amended]

2. The FAA amends § 39.13 by adding the following new Airworthiness Directive (AD):

Eurocopter France: Docket No. FAA–2012–0630; Directorate Identifier 2011–SW–010–AD.

(a) Applicability

This AD applies to Eurocopter France EC130B4 helicopters with center windscreen panel (center windscreen), part number (P/N) 350A25–9004–00, 350A25–9025–00, or 350A25–9041–20, certificated in any category.

(b) Unsafe Condition

This AD defines the unsafe condition as a crack in the blending radii of the center windscreen, which could lead to failure of the center windscreen, injury to the flight crew, and subsequent loss of control of the helicopter.

(c) Compliance

You are responsible for performing each action required by this AD within the specified compliance time unless it has already been accomplished prior to that time.

(d) Required Actions

(1) Until the center windscreen is replaced with center windscreen P/N 350A25–9045–20, before each flight, visually check the center windscreen for a crack in the area of the blending radii where the front-lower part of the center windscreen joins the front fuselage as depicted in Figure 1 of this AD. This visual check may be performed by the owner/operator (pilot) holding at least a private pilot certificate, and must be entered into the aircraft records showing compliance with the AD in accordance with Title 14 Code of Federal Regulations (14 CFR) 43.9 (a)(1)–(4) and 14 CFR 91.417(a)(2)(v). The record must be maintained as required by 14 CFR 91.417, 121.380, or 135.439.

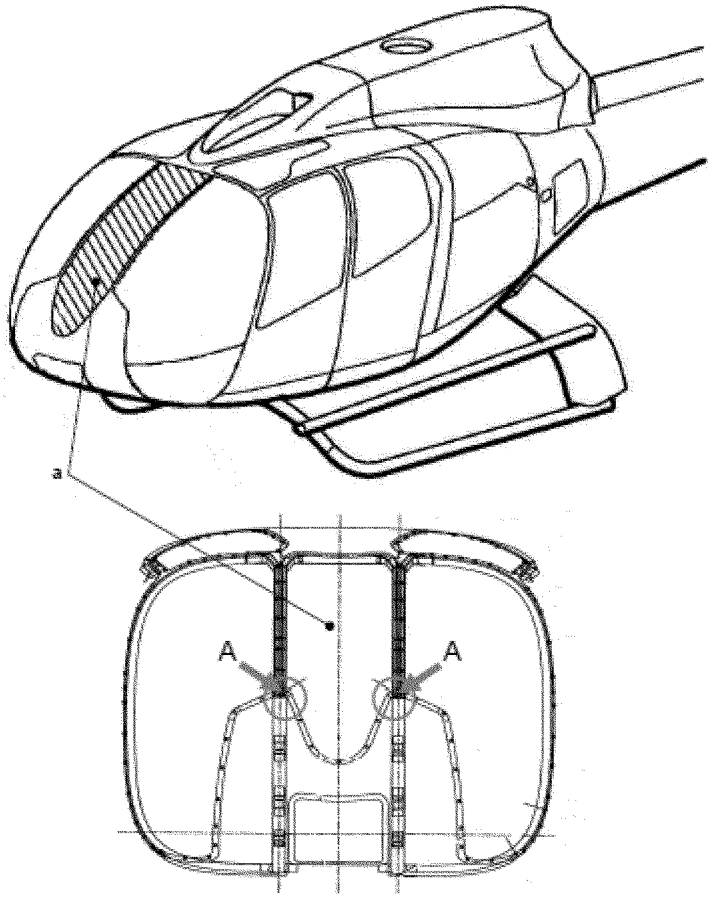

Figure 1

(2) If there is a crack or if a pilot indicates that the center windscreen distorted during flight, before further flight, replace the center windscreen with an airworthy center windscreen, P/N 350A25–9045–20, in accordance with the Accomplishment Instructions, paragraphs 2.B.2.b. through 2.B.2.b.4. of Eurocopter Service Bulletin No. 56–003, Revision 0, dated November 16, 2010.

(3) Within 12 months, replace the center windscreen with an airworthy center windscreen, P/N 350A25–9045–20, in accordance with the instructions contained in paragraph (d)(2) of this AD.

(4) Replacing the center windscreen with center windscreen, P/N 350A25–9045–20, constitutes terminating action for the requirements of this AD.

(e) Special Flight Permit

Special flight permits may be issued in accordance with 14 CFR §§ 21.197 and 21.199 to operate the helicopter to a location where the requirements of this AD can be accomplished, provided that:

(1) No passengers are onboard;

(2) The time to fly to the location does not exceed 10 hours time-in-service; and

(3) The airspeed does not exceed 70 knots indicated air speed (KIAS).

(f) Alternative Methods of Compliance (AMOC)

(1) The Manager, Safety Management Group, FAA, may approve AMOCs for this AD. Send your proposal to: Jim Grigg, Manager, Safety Management Group, Rotorcraft Directorate, FAA, 2601 Meacham Blvd., Fort Worth, TX 76137; telephone (817) 222–5110; email *jim.grigg@faa.gov.*

(2) For operations conducted under a 14 CFR part 119 operating certificate or under 14 CFR part 91, subpart K, we suggest that you notify your principal inspector, or lacking a principal inspector, the manager of the local flight standards district office or certificate holding district office before operating any aircraft complying with this AD through an AMOC.

(g) Additional Information

(1) For service information identified in this AD, contact American Eurocopter Corporation, 2701 N. Forum Drive, Grand Prairie, TX 75052, telephone (972) 641–0000 or (800) 232–0323, fax (972) 641–3775, or at *http://www.eurocopter.com/techpub.* You may review a copy of the service information at the FAA, Office of the Regional Counsel, Southwest Region, 2601 Meacham Blvd., Room 663, Fort Worth, Texas 76137.

(2) The subject of this AD is addressed in the European Aviation Safety Agency (EASA) AD No. 2010–0258, dated December 6, 2010.

(h) Subject

Joint Aircraft Service Component (JASC) Code: 5600, Window/Windshield System.

Issued in Fort Worth, Texas, on June 8, 2012.

Kim Smith,

Manager, Rotorcraft Directorate, Aircraft Certification Service.

[FR Doc. 2012–14799 Filed 6–15–12; 8:45 am]

BILLING CODE 4910–13–P

DEPARTMENT OF TRANSPORTATION

Federal Aviation Administration

14 CFR Part 39

[Docket No. FAA–2012–0631; Directorate Identifier 2011–SW–021–AD]

RIN 2120–AA64

Airworthiness Directives; Eurocopter France Helicopters

AGENCY: Federal Aviation Administration (FAA), DOT.

ACTION: Notice of proposed rulemaking (NPRM).

SUMMARY: We propose to adopt a new airworthiness directive (AD) for Eurocopter France Model AS350B, AS350BA, AS350B1, AS350B2, AS350B3, AS350C, AS350D, AS350D1, AS355E, AS355F, AS355F1, AS355F2, AS355N, and AS355NP helicopters with certain Aerazur emergency flotation gear attachment brackets (brackets) installed. This proposed AD would require an initial and recurring inspection of the brackets for a crack, and if there is a crack, replacing the cracked bracket with an airworthy bracket. This proposed AD is prompted by reports of cracks on the brackets. The proposed actions are intended to prevent failure of the emergency flotation system and loss of float stability in the event of a water landing.

DATES: We must receive comments on this proposed AD by August 17, 2012.

ADDRESSES: You may send comments by any of the following methods:

- *Federal eRulemaking Docket:* Go to *http://www.regulations.gov.* Follow the online instructions for sending your comments electronically.
- *Fax:* 202–493–2251.
- *Mail:* Send comments to the U.S. Department of Transportation, Docket Operations, M–30, West Building Ground Floor, Room W12–140, 1200 New Jersey Avenue SE., Washington, DC 20590–0001.
- *Hand Delivery:* Deliver to the ''Mail'' address between 9 a.m. and 5 p.m., Monday through Friday, except Federal holidays.

Examining the AD Docket: You may examine the AD docket on the Internet at *http://www.regulations.gov* or in person at the Docket Operations Office between 9 a.m. and 5 p.m., Monday through Friday, except Federal holidays. The AD docket contains this proposed AD, the economic evaluation, any comments received, and other information. The street address for the Docket Operations Office (telephone 800–647–5527) is in the **ADDRESSES** section. Comments will be available in the AD docket shortly after receipt.

For service information identified in this proposed AD, contact American Eurocopter Corporation, 2701 N. Forum Drive, Grand Prairie, Texas 75052; telephone (972) 641–0000 or (800) 232–0323; fax (972) 641–3775; or at *http://www.eurocopter.com/techpub.* You may review the referenced service information at the FAA, Office of the Regional Counsel, Southwest Region, 2601 Meacham Blvd., Room 663, Fort Worth, Texas 76137.

FOR FURTHER INFORMATION CONTACT: Jim Grigg, Manager, Safety Management Group, Rotorcraft Directorate, FAA, 2601 Meacham Blvd., Fort Worth, Texas 76137; telephone (817) 222–5110; email *jim.grigg@faa.gov.*

SUPPLEMENTARY INFORMATION:

Comments Invited

We invite you to participate in this rulemaking by submitting written comments, data, or views. We also invite comments relating to the economic, environmental, energy, or federalism impacts that might result from adopting the proposals in this document. The most helpful comments reference a specific portion of the proposal, explain the reason for any recommended change, and include supporting data. To ensure the docket does not contain duplicate comments, commenters should send only one copy of written comments, or if comments are filed electronically, commenters should submit only one time.

We will file in the docket all comments that we receive, as well as a report summarizing each substantive public contact with FAA personnel concerning this proposed rulemaking. Before acting on this proposal, we will consider all comments we receive on or before the closing date for comments. We will consider comments filed after the comment period has closed if it is possible to do so without incurring expense or delay. We may change this proposal in light of the comments we receive.

Discussion

The European Aviation Safety Agency (EASA), which is the Technical Agent for the Member States of the European Union, issued AD No. 2011–0072, dated April 20, 2011 (AD 2011–0072), to correct an unsafe condition for the Eurocopter AS350B, AS350BA, AS350BB, AS350B1, AS350B2, AS350B3, AS350D, AS355E, AS355F, AS355F1, AS355F2, AS355N, and AS355NP helicopters with Aerazur emergency flotation gear attachments installed. EASA advises of several reports of cracks being found on the brackets which appear to be caused by stress corrosion. This condition, if not corrected, could result in ''rupture of the emergency flotation gear attachment brackets'' during a water landing, no longer ensuring float stability of the helicopter, possibly resulting in damage to the helicopter and injury to the occupants. The EASA's AD requires an initial inspection of the brackets, replacement of any brackets found with cracks, and re-inspection of the brackets every 13 months.

FAA's Determination

These helicopters have been approved by the aviation authority of France and are approved for operation in the United States. Pursuant to our bilateral agreement with France, the EASA, its technical representative, has notified us of the unsafe condition described in its AD. We are proposing this AD because we evaluated all known relevant information and determined that an unsafe condition is likely to exist or develop on other helicopters of these same type designs.

Related Service Information

Eurocopter issued Alert Service Bulletin (ASB) No. AS350–05.00.63, Revision 1, dated April 18, 2011 (AS350–05.00.63), and ASB No. AS355–05.00.58, Revision 1, dated April 18, 2011 (AS355–05.00.58). These ASBs specify procedures to inspect the front and rear brackets at regular intervals. The EASA classified these ASBs as mandatory and issued EASA AD 2011–0072 to ensure the continued airworthiness of these helicopters.

Proposed AD Requirements

This proposed AD would require inspecting the brackets for a crack within 110 hours time-in-service (TIS) or 3 months, whichever occurs first and, if there is a crack, replacing the cracked bracket with an airworthy bracket. This proposed AD would also require repeating the inspection at intervals not to exceed 13 months.

Differences Between This Proposed AD and the EASA AD

Differences between this proposed AD and the EASA AD include:

- The EASA AD applies to Eurocopter Model AS 350 BB helicopters; this proposed AD does not as this model is not type certificated by the FAA. Additionally, the EASA AD excludes Eurocopter Models AS350C and AS350D1, whereas this proposed AD includes them.
- The EASA AD mandates different compliance times depending on the manufacture date of the helicopter; we mandate inspecting all helicopters within 110 hours TIS or 3 months, whichever occurs first, regardless of date of manufacture.
- This proposed AD does not require returning cracked brackets to the manufacturer.

Interim Action

We consider this proposed AD interim action. Eurocopter is currently developing a modification that will address the unsafe condition identified in this AD. Once this modification is

developed, approved, and available, we might consider additional rulemaking.

Costs of Compliance

We estimate that this proposed AD would affect 733 helicopters of U.S. Registry. We estimate that operators may incur the following costs in order to comply with this AD. It would take about 4 work-hours per inspection cycle and the average labor rate is $85 per work-hour. Based on these estimates, the total cost per inspection cycle would be $340 per helicopter and $249,220 on the U.S. fleet. Required parts for one bracket replacement would cost about $1,130 and replacement would take about 1 work-hour. Thus, the total cost to replace one bracket would be about $1,215; however, we have no way of determining the number of helicopters that might need these replacements.

Authority for This Rulemaking

Title 49 of the United States Code specifies the FAA's authority to issue rules on aviation safety. Subtitle I, section 106, describes the authority of the FAA Administrator. ''Subtitle VII: Aviation Programs,'' describes in more detail the scope of the Agency's authority.

We are issuing this rulemaking under the authority described in ''Subtitle VII, Part A, Subpart III, Section 44701: General requirements.'' Under that section, Congress charges the FAA with promoting safe flight of civil aircraft in air commerce by prescribing regulations for practices, methods, and procedures the Administrator finds necessary for safety in air commerce. This regulation is within the scope of that authority because it addresses an unsafe condition that is likely to exist or develop on products identified in this rulemaking action.

Regulatory Findings

We determined that this proposed AD would not have federalism implications under Executive Order 13132. This proposed AD would not have a substantial direct effect on the States, on the relationship between the national Government and the States, or on the distribution of power and responsibilities among the various levels of government.

For the reasons discussed, I certify this proposed regulation:

1. Is not a ''significant regulatory action'' under Executive Order 12866;

2. Is not a ''significant rule'' under the DOT Regulatory Policies and Procedures (44 FR 11034, February 26, 1979);

3. Will not affect intrastate aviation in Alaska to the extent that it justifies making a regulatory distinction; and

4. Will not have a significant economic impact, positive or negative, on a substantial number of small entities under the criteria of the Regulatory Flexibility Act.

We prepared an economic evaluation of the estimated costs to comply with this proposed AD and placed it in the AD docket.

List of Subjects in 14 CFR Part 39

Air transportation, Aircraft, Aviation safety, Incorporation by reference, Safety.

The Proposed Amendment

Accordingly, under the authority delegated to me by the Administrator, the FAA proposes to amend 14 CFR part 39 as follows:

PART 39—AIRWORTHINESS DIRECTIVES

1. The authority citation for part 39 continues to read as follows:

Authority: 49 U.S.C. 106(g), 40113, 44701.

§ 39.13 [Amended]

2. The FAA amends § 39.13 by adding the following new airworthiness directive (AD):

Eurocopter France: Docket No. FAA–2012–0631; Directorate Identifier 2011–SW–021–AD.

(a) Applicability

This AD applies to Eurocopter France Model AS350B, AS350BA, AS350B1, AS350B2, AS350B3, AS350C, AS350D, AS350D1, AS355E, AS355F, AS355F1, AS355F2, AS355N, and AS355NP helicopters with an Aerazur emergency flotation gear attachment bracket, part number 158172, 158173, 158288, or 158289, installed, certificated in any category.

(b) Unsafe Condition

This AD defines the unsafe condition as a crack in an attachment bracket of the emergency flotation gear. This condition could result in failure of the emergency flotation system and loss of float stability in the event of a water landing.

(c) Compliance

You are responsible for performing each action required by this AD within the specified compliance time unless it has already been accomplished prior to that time.

(d) Required Actions

Within 110 hours time-in-service or 3 months, whichever occurs first, and thereafter at intervals not to exceed 13 months:

(1) Using a 5x or higher power magnifying glass, visually inspect the front emergency floatation gear attachment bracket (Figure 1 of this AD, section B–B, item (e)) in Areas F, G, and H; and the rear emergency flotation gear attachment bracket (Figure 1 of this AD, section A–A, item (a)) in Areas D and E for a crack.

BILLING CODE 4910–13–P

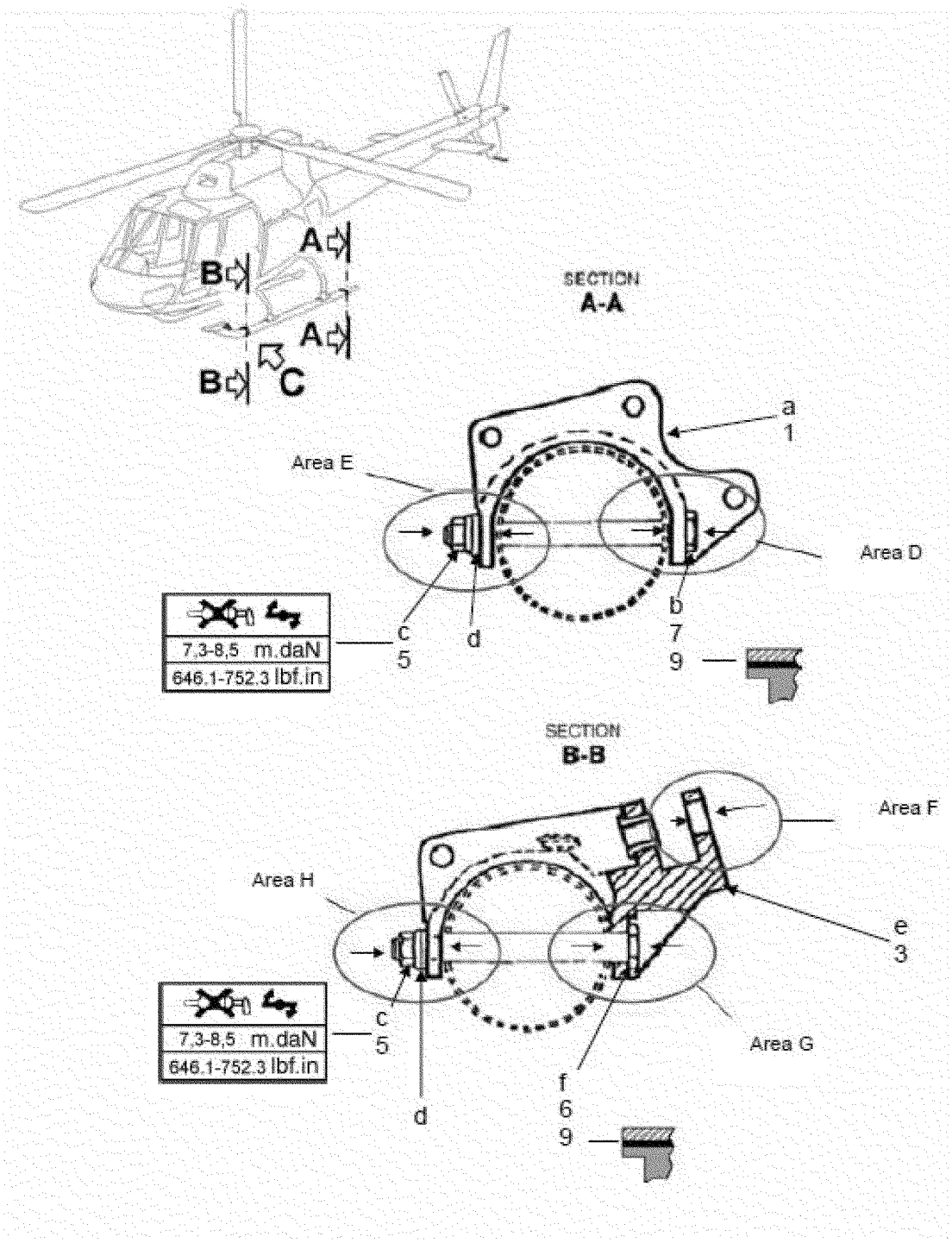

Figure 1. Emergency Flotation Gear Attachment Brackets

BILLING CODE 4910–13–C

(2) If there is a crack, replace the cracked emergency floatation gear attachment bracket with an airworthy emergency floatation gear attachment bracket prior to reinstallation of the emergency flotation equipment.

(e) Alternative Methods of Compliance (AMOC)

(1) The Manager, Rotorcraft Directorate, FAA, may approve AMOCs for this AD. Send your proposal to: Jim Grigg, Manager, Safety Management Group, Rotorcraft Directorate, FAA, 2601 Meacham Blvd., Fort Worth, Texas 76137; telephone (817) 222–5110; email *jim.grigg@faa.gov.*

(2) For operations conducted under a 14 CFR part 119 operating certificate or under 14 CFR part 91, subpart K, we suggest that you notify your principal inspector, or lacking a principal inspector, the manager of the local flight standards district office or certificate holding district office before operating any aircraft complying with this AD through an AMOC.

(f) Additional Information

(1) Eurocopter Alert Service Bulletin (ASB) No. AS350–05.00.63, Revision 1, dated April 18, 2011, and ASB No. AS355–05.00.58, Revision 1, dated April 18, 2011, which are not incorporated by reference, contain additional information about the subject of this AD. For this service information, contact American Eurocopter Corporation, 2701 N. Forum Drive, Grand Prairie, Texas 75052; telephone (972) 641–0000 or (800) 232–0323; fax (972) 641–3775; or at *http://www.eurocopter.com/techpub.* You may review this service information at the FAA, Office of the Regional Counsel, Southwest Region, 2601 Meacham Blvd., Room 663, Fort Worth, Texas 76137.

(2) The subject of this AD is addressed in European Aviation Safety Agency (EASA) AD No. 2011–0072, dated April 20, 2011.

(g) Subject

Joint Aircraft Service Component (JASC) Code: 2560, Emergency Equipment.

Issued in Fort Worth, Texas, on June 8, 2012.

Kim Smith,

Manager, Rotorcraft Directorate, Aircraft Certification Service.

[FR Doc. 2012–14807 Filed 6–15–12; 8:45 am]

BILLING CODE 4910–13–P

DEPARTMENT OF TRANSPORTATION

Federal Aviation Administration

14 CFR Part 39

[Docket No. FAA–2012–0632; Directorate Identifier 2011–SW–044–AD]

RIN 2120–AA64

Airworthiness Directives; Eurocopter France Helicopters

AGENCY: Federal Aviation Administration (FAA), DOT.

ACTION: Notice of proposed rulemaking (NPRM).

SUMMARY: We propose to adopt a new airworthiness directive (AD) for all Eurocopter France (Eurocopter) Model SA–365N, SA–365N1, AS–365N2, AS 365 N3, EC 155B, EC155B1, SA–365C, SA–365C1, SA–365C2, and SA–366G1 helicopters. This proposed AD is prompted by reports of corrosion on the main gearbox (MGB) casing lower area between the two servo-control anchoring fitting attachment ribs. An investigation determined that the corrosion was associated with sealing compound on the lower part of the fitting/casing attachment. The proposed actions are intended to detect corrosion on the MGB casing, which could lead to a crack, failure of the MGB, and subsequent loss of control of the helicopter.

DATES: We must receive comments on this proposed AD by August 17, 2012.

ADDRESSES: You may send comments by any of the following methods:

- *Federal eRulemaking Docket:* Go to *http://www.regulations.gov.* Follow the online instructions for sending your comments electronically.
- *Fax:* 202–493–2251.
- *Mail:* Send comments to the U.S. Department of Transportation, Docket Operations, M–30, West Building Ground Floor, Room W12–140, 1200 New Jersey Avenue SE., Washington, DC 20590–0001.
- *Hand Delivery:* Deliver to the ''Mail'' address between 9 a.m. and 5 p.m., Monday through Friday, except Federal holidays.

Examining the AD Docket: You may examine the AD docket on the Internet at *http://www.regulations.gov* or in person at the Docket Operations Office between 9 a.m. and 5 p.m., Monday through Friday, except Federal holidays. The AD docket contains this proposed AD, the economic evaluation, any comments received, and other information. The street address for the Docket Operations Office (telephone 800–647–5527) is in the **ADDRESSES** section. Comments will be available in the AD docket shortly after receipt.

For service information identified in this proposed AD, contact American Eurocopter Corporation, 2701 Forum Drive, Grand Prairie, TX 75053–4005, telephone (800) 232–0323, fax (972) 641–3710, or at *http://www.eurocopter.com.* You may review a copy of the referenced service information at the FAA, Office of the Regional Counsel, Southwest Region, 2601 Meacham Blvd., Room 663, Fort Worth, Texas 76137.

FOR FURTHER INFORMATION CONTACT: Rao Edupuganti, Aviation Safety Engineer, Regulations and Policy Group, Rotorcraft Directorate, FAA, 2601 Meacham Blvd., Fort Worth, Texas 76137; telephone (817) 222–4389; email: *rao.edupaganti@faa.gov.*

SUPPLEMENTARY INFORMATION:

Comments Invited

We invite you to participate in this rulemaking by submitting written comments, data, or views. We also invite comments relating to the economic, environmental, energy, or federalism impacts that might result from adopting the proposals in this document. The most helpful comments reference a specific portion of the proposal, explain the reason for any recommended change, and include supporting data. To ensure the docket does not contain duplicate comments, commenters should send only one copy of written comments, or if comments are filed electronically, commenters should submit only one time.

We will file in the docket all comments that we receive, as well as a report summarizing each substantive public contact with FAA personnel concerning this proposed rulemaking. Before acting on this proposal, we will consider all comments we receive on or before the closing date for comments. We will consider comments filed after the comment period has closed if it is possible to do so without incurring expense or delay. We may change this proposal in light of the comments we receive.

Discussion

The European Aviation Safety Agency (EASA), which is the Technical Agent for the Member States of the European Union, has issued AD No.: 2011–0127, dated July 1, 2011 (AD No. 2011–0127), which supersedes Directorate General for Civil Aviation (DGAC France) AD F–2008–04, dated June 4, 2008, for the Eurocopter Model EC 155 B, EC 155 B1, SA 365 N, SA 365 N1, AS 365 N2, AS 365 N3, SA 366 G1, SA 365 C, SA 365 C1, SA 365 C2, and SA 365 C3 helicopters with a MGB, all part numbers, that was delivered before December 5, 2007, installed on helicopters delivered before December 5, 2007, or overhauled or repaired before September 30, 2008. EASA states that in 2008, it received two reports of atmospheric corrosion on the MGB casing lower area of two helicopters between the two servo-control anchoring fitting attachment ribs. The investigation showed that the corrosion occurred in this area due to the presence of ''PR sealing compound'' on the lower part of the fitting/casing attachment. The ''PR sealing compound'' may have been applied incorrectly on some helicopters due to a misinterpretation of the Eurocopter documentation during installation. EASA states that this condition, if not corrected, could lead to ''crack initiation and crack growth in the affected area of the casing,'' which could cause this area to fail and result in loss of control of the helicopter.

FAA's Determination

These helicopters have been approved by the aviation authority of France and are approved for operation in the United States. Pursuant to our bilateral agreement with France, EASA, its technical representative, has notified us of the unsafe condition described in its AD. We are proposing this AD because we evaluated all known relevant information and determined that an

unsafe condition is likely to exist or develop on other products of these same type designs.

Related Service Information

Eurocopter has issued one Emergency Alert Service Bulletin (EASB), Revision 0, dated May 7, 2008, with five different numbers. EASB No. 63.00.17 is for the Model AS 365-series helicopters; EASB No. 63.00.12 is for the military Model AS 565-series helicopters, which are not FAA type certificated; EASB No. 63A011 is for the Model EC 155-series helicopters; EASB No. 65.03 is for the Model SA 366-series helicopters; and EASB No. 65.47 is for the Model SA 365-series helicopters and the non-FAA type certificated Model SA 360-series helicopters. The EASB specifies inspecting for ''PR sealing compound'' on the lower parts of the MGB anchoring fittings, removing any ''PR sealing compound,'' and repairing any corrosion. EASA classified this EASB as mandatory and issued AD No. 2011–0127 to ensure the continued airworthiness of these helicopters.

Proposed AD Requirements

This proposed AD would require the following actions:

- Within 30 hours time-in-service (TIS), inspecting the lower parts of the anchoring fittings for sealing compound.
- If there is sealing compound on the lower parts of the anchoring fittings, removing the sealing compound and inspecting the anchoring fittings for corrosion.
- If there is corrosion, repairing the affected area. If there is no corrosion, applying touch up protective treatment and renewing any damaged sealing compound bead in the lower part of the anchoring fitting.

Differences Between This Proposed AD and the EASA AD

The EASA AD requires inspecting the anchoring fittings for ''PR sealing compound'' within 15 flight hours, while this proposed AD would require inspecting within 30 hours TIS. The EASA AD applies to the Model SA–365C3, and this proposed AD does not include this model because it does not have an FAA-issued type certificate. This AD would not allow the compliance times provided in Appendix 1 of the EASA AD, since it is desirable to accomplish any required repairs before further flight.

Costs of Compliance

We estimate that this proposed AD would affect 31 helicopters of U.S. Registry. We estimate that operators may incur the following costs in order to comply with this AD. Inspecting the anchor fittings for sealing compound and corrosion will require about .5 work hour at an average labor rate of $85 per hour, for a cost per helicopter of about $43 and a cost to the entire U.S. fleet of $1,318. To remove any sealing compound and repair any corrosion damage will require about 8 work hours at an average labor rate of $85 per hour, for a cost per helicopter of $680.

Authority for This Rulemaking

Title 49 of the United States Code specifies the FAA's authority to issue rules on aviation safety. Subtitle I, section 106, describes the authority of the FAA Administrator. ''Subtitle VII: Aviation Programs,'' describes in more detail the scope of the Agency's authority.

We are issuing this rulemaking under the authority described in ''Subtitle VII, Part A, Subpart III, Section 44701: General requirements.'' Under that section, Congress charges the FAA with promoting safe flight of civil aircraft in air commerce by prescribing regulations for practices, methods, and procedures the Administrator finds necessary for safety in air commerce. This regulation is within the scope of that authority because it addresses an unsafe condition that is likely to exist or develop on products identified in this rulemaking action.

Regulatory Findings

We determined that this proposed AD would not have federalism implications under Executive Order 13132. This proposed AD would not have a substantial direct effect on the States, on the relationship between the national Government and the States, or on the distribution of power and responsibilities among the various levels of government.

For the reasons discussed, I certify this proposed regulation:

1. Is not a ''significant regulatory action'' under Executive Order 12866;

2. Is not a ''significant rule'' under the DOT Regulatory Policies and Procedures (44 FR 11034, February 26, 1979);

3. Will not affect intrastate aviation in Alaska to the extent that it justifies making a regulatory distinction; and

4. Will not have a significant economic impact, positive or negative, on a substantial number of small entities under the criteria of the Regulatory Flexibility Act.

We prepared an economic evaluation of the estimated costs to comply with this proposed AD and placed it in the AD docket.

List of Subjects in 14 CFR Part 39

Air transportation, Aircraft, Aviation safety, Incorporation by reference, Safety.

The Proposed Amendment

Accordingly, under the authority delegated to me by the Administrator, the FAA proposes to amend 14 CFR part 39 as follows:

PART 39—AIRWORTHINESS DIRECTIVES

1. The authority citation for part 39 continues to read as follows:

Authority: 49 U.S.C. 106(g), 40113, 44701.

§ 39.13 [Amended]

2. The FAA amends § 39.13 by adding the following new Airworthiness Directive (AD):

Eurocopter France Helicopters: Docket No. FAA–2012–0632; Directorate Identifier 2011–SW–044–AD.

(a) Applicability

This AD applies to Eurocopter Model SA–365N, SA–365N1, AS–365N2, AS 365 N3, EC 155B, EC155B1, SA–366G1, SA–365C, SA–365C1, and SA–365C2 helicopters, with a main gearbox (MGB) installed, certificated in any category.

(b) Unsafe Condition

This AD defines the unsafe condition as corrosion on the MGB casing lower area between the servo-control anchoring ribs, caused by sealing compound on the lower part of the fitting/casing attachment. This condition could result in a crack, failure of the MGB, and subsequent loss of control of the helicopter.

(c) Compliance

You are responsible for performing each action required by this AD within the specified compliance time unless it has already been accomplished prior to that time.

(d) Required Actions

(1) Within 30 hours time-in-service, inspect the lower parts of the MGB servo-control anchoring fittings (anchor fittings) for sealing compound, referring to Figure 1 of Eurocopter Emergency Alert Service Bulletin No. 63.00.17 (for Models SA–365N, SA–365N1, AS–365N2 and AS 365 N3); No. 63A011 (for Models EC 155B and EC155B1); No. 65.03 (for Model SA–366G1); and No. 65.47 (for Models SA–365C, SA–365C1, and SA–365C2), Revision 0, dated May 7, 2008 (EASB).

Note to (d)(1): The Eurocopter EASB is one document with multiple EASB numbers, each applicable to different base model Eurocopter helicopters.

(2) If there is sealing compound on the lower part of an MGB anchor fitting, remove the sealing compound and inspect for corrosion in the lower area of the MGB casing.

(i) If there is corrosion, before further flight, repair the corrosion area.

(ii) If there is no corrosion, apply touch up protective treatment, if required, and renew the bead of any damaged sealing compound in the upper part of the anchor fitting.

(e) Alternative Methods of Compliance (AMOC)

(1) The Manager, Safety Management Group, FAA, may approve AMOCs for this AD. Send your proposal to: Rao Edupuganti, Aviation Safety Engineer, Regulations and Policy Group, Rotorcraft Directorate, FAA, 2601 Meacham Blvd., Fort Worth, Texas 76137; telephone (817) 222–4389; email: *rao.edupaganti@faa.gov.*

(2) For operations conducted under a 14 CFR part 119 operating certificate or under 14 CFR part 91, subpart K, we suggest that you notify your principal inspector, or lacking a principal inspector, the manager of the local flight standards district office or certificate holding district office before operating any aircraft complying with this AD through an AMOC.

(f) Additional Information

(1) Eurocopter Repair Sheet 365–63–36–08, dated April 4, 2008 and Standard Practices Manual (MTC) Work Cards 20.04.04, 20.04.05, and 20.05.01, which are not incorporated by reference, contain additional information regarding the subject of this proposed AD and in particular regarding the procedures for corrosion repair, protective treatment touch-up, and renewing the damaged sealing bead.

(2) For service information identified in this AD, contact American Eurocopter Corporation, 2701 Forum Drive, Grand Prairie, TX 75053–4005, telephone (800) 232–0323, fax (972) 641–3710, or at *http://www.eurocopter.com.* You may review a copy of the service information at the FAA, Office of the Regional Counsel, Southwest Region, 2601 Meacham Blvd., Room 663, Fort Worth, Texas 76137.

(3) The subject of this AD is addressed in European Aviation Safety Agency AD No. 2011–0127, dated July 1, 2011.

(g) Subject

Joint Aircraft Service Component (JASC) Code: 6320: Main Rotor Gearbox.

Issued in Fort Worth, Texas, on June 7, 2012.

Kim Smith,

Manager, Rotorcraft Directorate, Aircraft Certification Service.

[FR Doc. 2012–14805 Filed 6–15–12; 8:45 am]

BILLING CODE 4910–13–P

DEPARTMENT OF TRANSPORTATION

Federal Aviation Administration

14 CFR Part 39

[Docket No. FAA–2012–0637; Directorate Identifier 2012–NM–006–AD]

RIN 2120–AA64

Airworthiness Directives; The Boeing Company Airplanes

AGENCY: Federal Aviation Administration (FAA), DOT.

ACTION: Notice of proposed rulemaking (NPRM).

SUMMARY: We propose to adopt a new airworthiness directive (AD) for certain The Boeing Company Model 737–600, –700, –700C, –800, –900, and –900ER series airplanes. This proposed AD was prompted by a report of an inboard main landing gear (MLG) door assembly departure due to premature fatigue cracking in the inboard MLG door hinge fittings. This proposed AD would require repetitive inspections for cracking of the inboard MLG door hinge fittings; and modification of cracked fittings, which would terminate the repetitive inspections. We are proposing this AD to detect and correct fatigue cracking in the inboard MLG door hinge fittings which could result in loss of the MLG door assembly from the airplane; loss of the MLG door assembly could impact the flight control surfaces and result in reduced controllability of the airplane.

DATES: We must receive comments on this proposed AD by August 2, 2012.

ADDRESSES: You may send comments, using the procedures found in 14 CFR 11.43 and 11.45, by any of the following methods:

- *Federal eRulemaking Portal:* Go to *http://www.regulations.gov.* Follow the instructions for submitting comments.
- *Fax:* 202–493–2251.
- *Mail:* U.S. Department of Transportation, Docket Operations, M–30, West Building Ground Floor, Room W12–140, 1200 New Jersey Avenue SE., Washington, DC 20590.
- *Hand Delivery:* Deliver to Mail address above between 9 a.m. and 5 p.m., Monday through Friday, except Federal holidays.

For service information identified in this proposed AD, contact Boeing Commercial Airplanes, Attention: Data & Services Management, P.O. Box 3707, MC 2H–65, Seattle, Washington 98124–2207; telephone 206–544–5000, extension 1; fax 206–766–5680; Internet *https://www.myboeingfleet.com.* You may review copies of the referenced service information at the FAA, Transport Airplane Directorate, 1601 Lind Avenue SW., Renton, Washington. For information on the availability of this material at the FAA, call 425–227–1221.

Examining the AD Docket

You may examine the AD docket on the Internet at *http://www.regulations.gov;* or in person at the Docket Management Facility between 9 a.m. and 5 p.m., Monday through Friday, except Federal holidays. The AD docket contains this proposed AD, the regulatory evaluation, any comments received, and other information. The street address for the Docket Office (phone: 800–647–5527) is in the **ADDRESSES** section. Comments will be available in the AD docket shortly after receipt.

FOR FURTHER INFORMATION CONTACT: Nancy Marsh, Aerospace Engineer, Airframe Branch, ANM–120S, FAA, Seattle Aircraft Certification Office, 1601 Lind Avenue SW., Renton, Washington 98057–3356; phone: 425–917–6440; fax: 425–917–6590; email: *nancy.marsh@faa.gov.*

SUPPLEMENTARY INFORMATION:

Comments Invited

We invite you to send any written relevant data, views, or arguments about this proposal. Send your comments to an address listed under the **ADDRESSES** section. Include ''Docket No. FAA–2012–0637; Directorate Identifier 2012–NM–006–AD'' at the beginning of your comments. We specifically invite comments on the overall regulatory, economic, environmental, and energy aspects of this proposed AD. We will consider all comments received by the closing date and may amend this proposed AD because of those comments.

We will post all comments we receive, without change, to *http://www.regulations.gov,* including any personal information you provide. We will also post a report summarizing each substantive verbal contact we receive about this proposed AD.

Discussion

We received a report of an inboard MLG door assembly departure due to premature fatigue cracking in the inboard MLG door hinge fittings. Fatigue cracking in the inboard MLG door hinge fittings could result in loss of the MLG door assembly from the airplane; such loss could impact the flight control surfaces and result in reduced controllability of the airplane.

Relevant Service Information

We reviewed Boeing Alert Service Bulletin 737–52A1167, dated December 1, 2011. The service information describes procedures for doing repetitive detailed or surface high frequency eddy current (HFEC) inspections for cracking of the inboard MLG door hinge fittings; and modification of fittings, which would eliminate the need for the repetitive inspections. The modification consists of replacing the hinge fitting assembly. The initial compliance time is before 10,000 total flight cycles, within 10,000 flight cycles since replacement, or within 600 flight cycles after the effective date of this AD, whichever occurs latest. The repetitive interval is 600 flight cycles or 5,500 flight cycles depending on inspection type.

FAA's Determination

We are proposing this AD because we evaluated all the relevant information and determined the unsafe condition described previously is likely to exist or develop in other products of the same type design.

Proposed AD Requirements

This proposed AD would require accomplishing the actions specified in the service information described previously.

Costs of Compliance

We estimate that this proposed AD affects 1,175 airplanes of U.S. registry.

We estimate the following costs to comply with this proposed AD:

ESTIMATED COSTS

Action	Labor cost	Parts cost	Cost per product	Cost on U.S. operators
Inspection	3 work-hours × $85 per hour = $255 per inspection cycle.	$0	$255 per inspection cycle	$299,625 per inspection cycle.

We estimate the following costs to do any necessary replacements that would be required based on the results of the proposed inspection. We have no way of determining the number of aircraft that might need these replacements:

ON-CONDITION COSTS

Action	Labor cost	Parts cost	Cost per product
Optional Terminating Modification	9 work-hours × $85 per hour = $765	$6,550	$7,315

According to the manufacturer, some of the costs of this proposed AD may be covered under warranty, thereby reducing the cost impact on affected individuals. We do not control warranty coverage for affected individuals. As a result, we have included all costs in our cost estimate.

Authority for This Rulemaking

Title 49 of the United States Code specifies the FAA's authority to issue rules on aviation safety. Subtitle I, section 106, describes the authority of the FAA Administrator. Subtitle VII: Aviation Programs, describes in more detail the scope of the Agency's authority.

We are issuing this rulemaking under the authority described in Subtitle VII, Part A, Subpart III, Section 44701: ''General requirements.'' Under that section, Congress charges the FAA with promoting safe flight of civil aircraft in air commerce by prescribing regulations for practices, methods, and procedures the Administrator finds necessary for safety in air commerce. This regulation is within the scope of that authority because it addresses an unsafe condition that is likely to exist or develop on products identified in this rulemaking action.

Regulatory Findings

We determined that this proposed AD would not have federalism implications under Executive Order 13132. This proposed AD would not have a substantial direct effect on the States, on the relationship between the national Government and the States, or on the distribution of power and responsibilities among the various levels of government.

For the reasons discussed above, I certify this proposed regulation:

(1) Is not a ''significant regulatory action'' under Executive Order 12866,

(2) Is not a ''significant rule'' under the DOT Regulatory Policies and Procedures (44 FR 11034, February 26, 1979),

(3) Will not affect intrastate aviation in Alaska, and

(4) Will not have a significant economic impact, positive or negative, on a substantial number of small entities under the criteria of the Regulatory Flexibility Act.

List of Subjects in 14 CFR Part 39

Air transportation, Aircraft, Aviation safety, Incorporation by reference, Safety.

The Proposed Amendment

Accordingly, under the authority delegated to me by the Administrator, the FAA proposes to amend 14 CFR part 39 as follows:

PART 39—AIRWORTHINESS DIRECTIVES

1. The authority citation for part 39 continues to read as follows:

Authority: 49 U.S.C. 106(g), 40113, 44701.

§ 39.13 [Amended]

2. The FAA amends § 39.13 by adding the following new airworthiness directive (AD):

The Boeing Company: Docket No. FAA–2012–0637; Directorate Identifier 2012–NM–006–AD.

(a) Comments Due Date

We must receive comments by August 2, 2012.

(b) Affected ADs

None.

(c) Applicability

This AD applies to The Boeing Company Model 737–600, –700, –700C, –800, –900, and –900ER series airplanes; certificated in any category; as identified in Boeing Alert Service Bulletin 737–52A1167, dated December 1, 2011.

(d) Subject

Joint Aircraft System Component (JASC)/Air Transport Association (ATA) of America Code 52, Doors.

(e) Unsafe Condition

This AD was prompted by a report of an inboard main landing gear (MLG) door assembly departure due to premature fatigue cracking in the inboard MLG door hinge fittings. We are issuing this AD to detect and correct fatigue cracking in the inboard MLG door hinge fittings, which could result in loss of the MLG door assembly from the airplane; loss of the MLG door assembly could impact the flight control surfaces and result in reduced controllability of the airplane.

(f) Compliance

Comply with this AD within the compliance times specified, unless already done.

(g) Initial and Repetitive Inspections

Except as provided by paragraph (h) of this AD, at the applicable time in paragraph 1.E. of Boeing Alert Service Bulletin 737–52A1167, dated December 1, 2011, do either a detailed or surface high frequency eddy current (HFEC) inspection for cracking of the left- and right-side inboard MLG door hinge fittings, in accordance with the Accomplishment Instructions of Boeing Alert Service Bulletin 737–52A1167, dated December 1, 2011. If any cracking is found, before further flight, modify the inboard MLG door hinge fittings on both left- and right-side inboard MLG doors, in accordance with the Accomplishment Instructions of Boeing Alert Service Bulletin 737–52A1167, dated December 1, 2011. Repeat either inspection at the applicable time in paragraph 1.E. of Boeing Alert Service Bulletin 737–52A1167, dated December 1, 2011. Doing the modification terminates the inspection requirements of this AD.

(h) Exception

Where Boeing Alert Service Bulletin 737–52A1167, dated December 1, 2011, specifies a compliance time ''after the original issue date of this service bulletin,'' this AD requires compliance within the specified compliance time after the effective date of this AD.

(i) Alternative Methods of Compliance (AMOCs)

(1) The Manager, Seattle Aircraft Certification Office (ACO), FAA, has the authority to approve AMOCs for this AD, if requested using the procedures found in 14 CFR 39.19. In accordance with 14 CFR 39.19, send your request to your principal inspector or local Flight Standards District Office, as appropriate. If sending information directly to the manager of the ACO, send it to the attention of the person identified in the Related Information section of this AD. Information may be emailed to: *9-ANM-Seattle-ACO-AMOC-Requests@faa.gov.*

(2) Before using any approved AMOC, notify your appropriate principal inspector, or lacking a principal inspector, the manager of the local flight standards district office/ certificate holding district office.

(3) An AMOC that provides an acceptable level of safety may be used for any repair required by this AD if it is approved by the Boeing Commercial Airplanes Organization Designation Authorization (ODA) that has been authorized by the Manager, Seattle ACO to make those findings. For a repair method to be approved, the repair must meet the certification basis of the airplane, and the approval must specifically refer to this AD.

(j) Related Information

(1) For more information about this AD, contact Nancy Marsh, Aerospace Engineer, Airframe Branch, ANM–120S, FAA, Seattle Aircraft Certification Office, 1601 Lind Avenue SW., Renton, Washington 98057–3356; phone: 425–917–6440; fax: 425–917–6590; email: *nancy.marsh@faa.gov.*

(2) For service information identified in this AD, contact Boeing Commercial Airplanes, Attention: Data & Services Management, P.O. Box 3707, MC 2H–65, Seattle, Washington 98124–2207; telephone 206–544–5000, extension 1; fax 206–766–5680; Internet *https://www.myboeingfleet.com.* You may review copies of the referenced service information at the FAA, Transport Airplane Directorate, 1601 Lind Avenue SW., Renton, Washington. For information on the availability of this material at the FAA, call 425–227–1221.

Issued in Renton, Washington, on June 8, 2012.

Michael Kaszycki,

Acting Manager, Transport Airplane Directorate, Aircraft Certification Service.

[FR Doc. 2012–14806 Filed 6–15–12; 8:45 am]

BILLING CODE 4910–13–P

DEPARTMENT OF TRANSPORTATION

Federal Aviation Administration

14 CFR Part 39

[Docket No. FAA–2012–0638; Directorate Identifier 2011–NM–266–AD]

RIN 2120–AA64

Airworthiness Directives; Empresa Brasileira de Aeronautica S.A. (EMBRAER) Airplanes

AGENCY: Federal Aviation Administration (FAA), DOT.

ACTION: Notice of proposed rulemaking (NPRM).

SUMMARY: We propose to adopt a new airworthiness directive (AD) for all Empresa Brasileira de Aeronautica S.A. (EMBRAER) Model EMB–135 airplanes, and Model EMB–145, –145ER, –145MR, –145LR, –145MP, and –145EP airplanes. This proposed AD was prompted by a report of a lightning strike hitting an airplane tail boom causing certain rear bulkhead parts to jam an elevator control rod. This proposed AD would require installing or reworking, as applicable, metallic diverters and aluminum sheets; modifying the lights assembly on the tail boom rear movable fairing; and replacing the hood assembly with a new hood assembly and rerouting its electrical harness. We are proposing this AD to prevent lightning strikes from causing certain parts to contact the airplane pitch control system, which could reduce airplane controllability.

DATES: We must receive comments on this proposed AD by August 2, 2012.

ADDRESSES: You may send comments by any of the following methods:

- *Federal eRulemaking Portal:* Go to *http://www.regulations.gov.* Follow the instructions for submitting comments.
- *Fax:* (202) 493–2251.
- *Mail:* U.S. Department of Transportation, Docket Operations, M–30, West Building Ground Floor, Room W12–140, 1200 New Jersey Avenue SE., Washington, DC 20590.
- *Hand Delivery:* U.S. Department of Transportation, Docket Operations, M–30, West Building Ground Floor, Room W12–140, 1200 New Jersey Avenue SE., Washington, DC, between 9 a.m. and 5 p.m., Monday through Friday, except Federal holidays.

For service information identified in this proposed AD, contact Empresa Brasileira de Aeronautica S.A. (EMBRAER), Technical Publications Section (PC 060), Av. Brigadeiro Faria Lima, 2170—Putim—12227–901 São Jose dos Campos—SP—BRASIL; telephone +55 12 3927–5852 or +55 12 3309–0732; fax +55 12 3927–7546; email *distrib@embraer.com.br;* Internet: *http://www.flyembraer.com.* You may review copies of the referenced service information at the FAA, Transport Airplane Directorate, 1601 Lind Avenue SW., Renton, Washington. For information on the availability of this material at the FAA, call 425–227–1221.

Examining the AD Docket

You may examine the AD docket on the Internet at *http://www.regulations.gov;* or in person at the Docket Operations office between 9 a.m. and 5 p.m., Monday through Friday, except Federal holidays. The AD docket contains this proposed AD, the regulatory evaluation, any comments received, and other information. The street address for the Docket Operations office (telephone (800) 647–5527) is in the **ADDRESSES** section. Comments will be available in the AD docket shortly after receipt.

FOR FURTHER INFORMATION CONTACT: Todd Thompson, Aerospace Engineer, International Branch, ANM–116, Transport Airplane Directorate, FAA, 1601 Lind Avenue SW., Renton, Washington 98057–3356; telephone (425) 227–1175; fax (425) 227–1149.

SUPPLEMENTARY INFORMATION:

Comments Invited

We invite you to send any written relevant data, views, or arguments about this proposed AD. Send your comments to an address listed under the **ADDRESSES** section. Include ''Docket No. FAA–2012–0638; Directorate Identifier 2011–NM–266–AD'' at the beginning of your comments. We specifically invite comments on the overall regulatory, economic, environmental, and energy aspects of this proposed AD. We will consider all comments received by the closing date and may amend this proposed AD based on those comments.

We will post all comments we receive, without change, to *http://www.regulations.gov,* including any personal information you provide. We will also post a report summarizing each substantive verbal contact we receive about this proposed AD.

Discussion

The Agência Nacional de Aviação Civil (ANAC), which is the aviation authority for Brazil, has issued Brazilian Airworthiness Directive 2011–11–01, dated November 30, 2011 (referred to after this as ''the MCAI''), to correct an unsafe condition for the specified products. The MCAI states:

> * * * [A] lightning strike event hitting the airplane tail boom [caused certain rear bulkhead parts to jam an elevator control rod] * * *. The lack of the appropriate protection against lightning strike effects [could cause certain parts to contact the airplane pitch control system, which could reduce airplane controllability.]
>
> * * * * *

The required actions include installing or reworking, as applicable, metallic diverters and aluminum sheets; modifying the lights assembly on the tail boom rear movable fairing; and replacing the hood assembly with a new hood assembly and rerouting its electrical harness. You may obtain further information by examining the MCAI in the AD docket.

Relevant Service Information

EMBRAER has issued Service Bulletin 145LEG–55–0013, dated September 8, 2011 (for Model EMB–135BJ airplanes); and Service Bulletin 145–55–0030, Revision 05, dated July 29, 2011 (for Model EMB–145 and EMB–135, except –135BJ, airplanes). The actions described in this service information are intended to correct the unsafe condition identified in the MCAI.

FAA's Determination and Requirements of This Proposed AD

This product has been approved by the aviation authority of another country, and is approved for operation in the United States. Pursuant to our bilateral agreement with the State of Design Authority, we have been notified of the unsafe condition described in the MCAI and service information referenced above. We are proposing this AD because we evaluated all pertinent information and determined an unsafe condition exists and is likely to exist or develop on other products of the same type design.

Costs of Compliance

Based on the service information, we estimate that this proposed AD would affect about 668 products of U.S. registry. We also estimate that it would take about 12 work-hours per product to comply with the basic requirements of this proposed AD. The average labor rate is $85 per work-hour. Required parts would cost about $2,507 per product. Where the service information lists required parts costs that are covered under warranty, we have assumed that there will be no charge for these parts. As we do not control warranty coverage for affected parties, some parties may incur costs higher than estimated here. Based on these figures, we estimate the cost of the proposed AD on U.S. operators to be $2,356,036, or $3,527 per product.

Authority for This Rulemaking

Title 49 of the United States Code specifies the FAA's authority to issue rules on aviation safety. Subtitle I, section 106, describes the authority of the FAA Administrator. ''Subtitle VII: Aviation Programs,'' describes in more detail the scope of the Agency's authority.

We are issuing this rulemaking under the authority described in ''Subtitle VII, Part A, Subpart III, Section 44701: General requirements.'' Under that section, Congress charges the FAA with promoting safe flight of civil aircraft in air commerce by prescribing regulations for practices, methods, and procedures the Administrator finds necessary for safety in air commerce. This regulation is within the scope of that authority because it addresses an unsafe condition that is likely to exist or develop on products identified in this rulemaking action.

Regulatory Findings

We determined that this proposed AD would not have federalism implications under Executive Order 13132. This proposed AD would not have a substantial direct effect on the States, on the relationship between the national Government and the States, or on the distribution of power and responsibilities among the various levels of government.

For the reasons discussed above, I certify this proposed regulation:

1. Is not a ''significant regulatory action'' under Executive Order 12866;
2. Is not a ''significant rule'' under the DOT Regulatory Policies and Procedures (44 FR 11034, February 26, 1979);
3. Will not affect intrastate aviation in Alaska; and
4. Will not have a significant economic impact, positive or negative, on a substantial number of small entities under the criteria of the Regulatory Flexibility Act.

We prepared a regulatory evaluation of the estimated costs to comply with this proposed AD and placed it in the AD docket.

List of Subjects in 14 CFR Part 39

Air transportation, Aircraft, Aviation safety, Incorporation by reference, Safety.

The Proposed Amendment

Accordingly, under the authority delegated to me by the Administrator, the FAA proposes to amend 14 CFR part 39 as follows:

PART 39—AIRWORTHINESS DIRECTIVES

1. The authority citation for part 39 continues to read as follows:

Authority: 49 U.S.C. 106(g), 40113, 44701.

§ 39.13 [Amended]

2. The FAA amends § 39.13 by adding the following new AD:

Empresa Brasileira de Aeronautica S.A. (EMBRAER): Docket No. FAA–2012–0638; Directorate Identifier 2011–NM–266–AD.

(a) Comments Due Date

We must receive comments by August 2, 2012.

(b) Affected ADs

None.

(c) Applicability

This AD applies to Empresa Brasileira de Aeronautica S.A. (EMBRAER) Model EMB–145, –145ER, –145MR, –145LR, –145MP, and –145EP airplanes; and Model EMB–135BJ, –135ER, –135KE, –135KL, and –135LR airplanes; certificated in any category; all serial numbers.

(d) Subject

Air Transport Association (ATA) of America Code 55, Stabilizers.

(e) Reason

This AD was prompted by a report of a lightning strike hitting an airplane tail boom causing certain rear bulkhead parts to jam an elevator control rod. We are issuing this AD

to prevent lightning strikes from causing certain parts to contact the airplane pitch control system, which could reduce airplane controllability.

(f) Compliance

You are responsible for having the actions required by this AD performed within the compliance times specified, unless the actions have already been done.

(g) Actions

Within 5,000 flight hours or 48 months after the effective date of this AD, whichever occurs first: Install or rework, as applicable, metallic diverters and aluminum sheets; modify the lights assembly on the tail boom rear movable fairing; and replace the hood assembly with a new hood assembly having part number (P/N) 145–23046–403 and reroute its electrical harness. Do all the actions in accordance with the Accomplishment Instructions of EMBRAER Service Bulletin 145LEG–55–0013, dated September 8, 2011 (for Model EMB–135BJ airplanes); or EMBRAER Service Bulletin 145–55–0030, Revision 05, dated July 29, 2011 (for Model EMB 145 and EMB–135, except –135BJ, airplanes).

(h) Other FAA AD Provisions

The following provisions also apply to this AD:

(1) Alternative Methods of Compliance (AMOCs): The Manager, International Branch, Transport Airplane Directorate, FAA, has the authority to approve AMOCs for this AD, if requested using the procedures found in 14 CFR 39.19. In accordance with 14 CFR 39.19, send your request to your principal inspector or local Flight Standards District Office, as appropriate. If sending information directly to the International Branch, send it to ATTN: Todd Thompson, Aerospace Engineer, International Branch, ANM–116, Transport Airplane Directorate, FAA, 1601 Lind Avenue SW., Renton, Washington 98057–3356; telephone (425) 227–1175; fax (425) 227–1149. Information may be emailed to: *9-ANM-116-AMOC-REQUESTS@faa.gov.* Before using any approved AMOC, notify your appropriate principal inspector, or lacking a principal inspector, the manager of the local flight standards district office/ certificate holding district office. The AMOC approval letter must specifically reference this AD.

(2) Airworthy Product: For any requirement in this AD to obtain corrective actions from a manufacturer or other source, use these actions if they are FAA-approved. Corrective actions are considered FAA-approved if they are approved by the State of Design Authority (or their delegated agent). You are required to assure the product is airworthy before it is returned to service.

(i) Related Information

(1) Refer to MCAI ANAC Airworthiness Directive 2011–11–01, dated November 30, 2011, and the following service information, for related information.

(i) EMBRAER Service Bulletin 145LEG–55–0013, dated September 8, 2011.

(ii) EMBRAER Service Bulletin 145–55–0030, Revision 05, dated July 29, 2011.

(2) For service information identified in this AD, contact Empresa Brasileira de Aeronautica S.A. (EMBRAER), Technical Publications Section (PC 060), Av. Brigadeiro Faria Lima, 2170—Putim—12227–901 São Jose dos Campos—SP—BRASIL; telephone +55 12 3927–5852 or +55 12 3309–0732; fax +55 12 3927–7546; email *distrib@embraer.com.br;* Internet: *http://www.flyembraer.com.* You may review copies of the referenced service information at the FAA, Transport Airplane Directorate, 1601 Lind Avenue SW., Renton, Washington. For information on the availability of this material at the FAA, call 425–227–1221.

Issued in Renton, Washington, on June 8, 2012.

Michael Kaszycki,

Acting Manager, Transport Airplane Directorate, Aircraft Certification Service.

[FR Doc. 2012–14808 Filed 6–15–12; 8:45 am]

BILLING CODE 4910–13–P

DEPARTMENT OF THE INTERIOR

Bureau of Indian Affairs

25 CFR Part 226

Notice of Intent To Establish an Osage Negotiated Rulemaking Committee

AGENCY: Bureau of Indian Affairs, Interior.

ACTION: Notice of intent; request for comments or nominations.

SUMMARY: The Bureau of Indian Affairs (BIA) is announcing its intent to establish an Osage Negotiated Rulemaking Committee (Committee). The Committee will develop specific recommendations to address future management and administration of the Osage Mineral Estate, including potential revisions to the regulations governing leasing of Osage Reservation Lands for Oil and Gas Mining, 25 CFR Part 226. The Committee will include representatives of parties who would be affected by a final rule. BIA solicits comments on this proposal to establish the Committee and its proposed membership. BIA also invites anyone who will be significantly affected by the proposed rule and believes their interests will not be adequately represented by the proposed members listed below to nominate a member to the Committee.

DATES: Submit nominations for Committee members or written comments on this notice on or before July 18, 2012.

ADDRESSES: You may submit nominations to the Committee or comments on this notice by any of the following methods:

- Mail comments or nominations to Mr. Robert Impson, Designated Federal Officer, Eastern Oklahoma Regional Office, Bureau of Indian Affairs, 3100 W. Peak Blvd., Muskogee, OK 74401; (918) 781–4600.
- Hand-carry comments or use an overnight courier service. Our courier address is 3100 W. Peak Blvd., Muskogee, OK 74401; (918) 781–4600.
- Email comments or nominations to *robert.impson@bia.gov.* Include the words Osage Negotiated Rulemaking in the subject line.

FOR FURTHER INFORMATION CONTACT: Mr. Robert Impson, Designated Federal Officer, Eastern Oklahoma Regional Office, Bureau of Indian Affairs, 3111 W. Peak Blvd., Muskogee, OK 74401; *robert.impson@bia.gov;* (918) 781–4600; (918) 781–4604 (FAX).

SUPPLEMENTARY INFORMATION:

I. Background

On October 14, 2011, the United States and the Osage Nation (formerly known as the Osage Tribe) signed a Settlement Agreement to resolve litigation regarding alleged mismanagement of the Osage Nation's oil and gas mineral estate, among other claims. As part of the Settlement Agreement, the parties agreed that it would be mutually beneficial ''to address means of improving the trust management of the Osage Mineral Estate, the Osage Tribal Trust Account, and Other Osage Accounts.'' Settlement Agreement, Paragraph 1.i. During settlement negotiations, it became apparent that a review of the existing regulations is necessary to better assist the BIA in managing the Osage Mineral Estate. The parties agreed to engage in a negotiated rulemaking for this purpose, Settlement Agreement, Paragraph 9.b.

II. Statutory Authorities

The Negotiated Rulemaking Act of 1996 (NRA) (5 U.S.C. 561 *et seq.*); the Federal Advisory Committee Act (FACA) (5 U.S.C. Appendix 2, section 1 *et seq.*); the Federal Oil and Gas Royalty Management Act of 1982 (30 U.S.C. 1701 *et seq.*); the Act of June 28, 1906, ch. 3572, 34 Stat. 539, as amended; and the Leasing of Osage Reservation Lands for Oil and Gas Mining, 25 CFR part 226.

III. The Committee and Its Process

In a negotiated rulemaking, a report containing recommendations for the provisions of the proposed rule is developed by a committee composed of representatives of government and the interests that will be significantly affected by the rule. Decisions on what

to include in the report are made by consensus.

''Consensus'' means unanimous concurrence among the interests represented on a negotiated rulemaking committee established under this subchapter, unless such committee (A) agrees to define such term to mean a general but not unanimous concurrence; or (B) agrees upon another specified definition. 5 U.S.C. 562(2)(A) and (B).

The negotiated rulemaking process is initiated by the agency's identification of interests potentially affected by the rulemaking under consideration. By this notice, BIA is soliciting comments on this action.

Following receipt of comments, BIA will establish the Committee. The Committee will advise the Secretary through the Bureau of Indian Affairs (BIA) on a rulemaking to revise 25 CFR part 226 regarding the future management and administration of oil and gas mining leases for Osage Reservation lands. The Committee will act solely in an advisory capacity to BIA. After the Committee produces a consensus report on the proposed rule, as discussed in more detail below, BIA will develop a proposed rule to be published in the **Federal Register**.

Under 5 U.S.C. 563, the head of the agency is required to determine that use of the negotiated rulemaking procedure is in the public interest. In making such a determination, the agency head must consider seven factors. Taking these factors into account, BIA has determined that a negotiated rulemaking is in the public interest because:

1. A rule is needed. BIA has determined that in order to avoid future litigation and to better assist it in managing and administering the Osage Mineral Estate, a rule is necessary.

2. A limited number of identifiable interests will be significantly affected by the rule. The regulations governing the Osage Mineral Estate apply only to the Osage Mineral Estate and the Osage Agency, and do not have broader applicability. For this reason, a limited number of readily identifiable interests will be significantly affected by the rule.

3. Due to the limited applicability of the current regulations and the limited number of interest holders, there is a reasonable likelihood that BIA can convene a Committee with a balanced representation of persons who:

- Can adequately represent the interests defined in item 2, above; and
- Are willing to negotiate in good faith to attempt to reach a consensus on provisions of a proposed rule.

4. There is reasonable likelihood that the Committee will reach consensus on a proposed rule within a fixed period of time. This is due to the settlement of the litigation and the desire of the Osage Nation and the Bureau of Indian Affairs to avoid further litigation by addressing and improving management and administration of the Osage Mineral Estate as soon as possible.

5. The use of negotiated rulemaking will not unreasonably delay development of a proposed rule and the issuance of a final rule. We anticipate that negotiation will expedite a proposed rule and ultimately the acceptance of a final rule.

6. BIA is committed to ensuring that the Committee has sufficient resources to complete its work in a timely fashion.

7. BIA, to the maximum extent possible and consistent with its legal obligations, will use the consensus report of the Committee as the basis for a proposed rule for public notice and comment.

IV. Negotiated Rulemaking Procedures

In compliance with FACA and NRA, BIA will use the following procedures and guidelines for this negotiated rulemaking. BIA may modify them in response to comments received on this notice or during the negotiation process.

A. Committee Formation

The Committee will be formed and operate in full compliance with the requirements of FACA and NRA and under the guidelines of the Committee's charter.

B. Interests Involved

BIA intends to ensure full and adequate representation of those interests that are expected to be significantly affected by the proposed rule. Under 5 U.S.C. 562(5), '''interest' means with respect to an issue or matter, multiple parties which have a similar point of view or which are likely to be affected in a similar manner.'' The regulations governing the Osage Mineral Estate apply only to the Osage Mineral Estate and the Osage Agency. For this reason, BIA believes the membership described below fully and adequately represents those interests expected to be significantly affected by the proposed rule.

C. Members

The Committee cannot exceed 25 members, and BIA prefers nine members. The Secretary of the Interior (Secretary) will provide four members (two from BIA, one from the Bureau of Land Management, and one from the Office of Natural Resources Revenue), plus a facilitator. Five members have been chosen by the Osage Minerals Council. The facilitator will not count against the membership and will not be a voting member.

Osage Representatives

Galen Crum
Joseph Abbott, Jr.
James Andrew Yates
Melvin Core
Curtis Oren Bear

Alternate Osage Representatives

Dudley Whitehorn
Myron Red Eagle

Federal Representatives

Daryl LaCounte, Bureau of Indian Affairs
Stephen Manydeeds, Office of the Assistant Secretary—Indian Affairs
Paul Tyler, Office of Natural Resources Revenue
James Stockbridge, Bureau of Land Management

Responsibility for expenses is stated under 5 U.S.C. 568(c) as follows:

> Members of a negotiated rulemaking committee shall be responsible for their own expenses of participation in such committee, except that an agency may, in accordance with section 7(d) of the Federal Advisory Committee Act, pay for a member's reasonable travel and per diem expenses, expenses to obtain technical assistance, and a reasonable rate of compensation, if—
>
> (1) Such member certifies a lack of adequate financial resources to participate in the committee; and
>
> (2) The agency determines that such member's participation in the committee is necessary to assure an adequate representation of the member's interest.

BIA commits to pay the travel and per diem expenses of Committee members if appropriate under the NRA and Federal Travel Regulations.

D. Tentative Schedule

BIA will publish the first meeting date in a **Federal Register** notice. The Committee will determine the dates of future meetings, notice of which will then be published in the **Federal Register**. At the first meeting, the Committee will formulate ground rules for developing consensus and establish whether there are any issues in addition to those identified by the Osage Nation and BIA to be addressed as part of the negotiated rulemaking. After the Committee reaches consensus on its report, BIA will develop a proposed rule to be published in the **Federal Register**.

BIA plans to publish a proposed rule for notice and comment within 30 months of convening the Committee. The Committee will meet bi-monthly with the first meeting tentatively planned for August 2012.

BIA plans to terminate the Committee if it does not reach consensus on a

report within 24 months of the first meeting. The Committee may end earlier upon the promulgation of the final rule, or if either BIA, after consulting with the Committee, or the Committee itself, specifies an earlier termination date.

E. Technical Assistance

BIA will ensure that the Committee has sufficient administrative and technical resources to complete its work in a timely fashion. BIA, with the help of a facilitator, will prepare all agendas, provide meeting notes, and provide a final report of any issues on which the Committee reaches consensus. BIA will also obtain space for all meetings.

V. Request for Nominations and Comments

BIA invites written comments on this initiative. Additionally, anyone who will be significantly affected by the proposed rule and who believes their interests will not be adequately represented by the members proposed above is invited to apply for or nominate a Committee member as follows. Each nomination or application must include:

(1) The name of the applicant or nominee and a description of the interests such person shall represent;

(2) Evidence that the applicant or nominee is authorized to represent parties related to the interests the person proposes to represent.

(3) A written commitment that the applicant or nominee will actively participate in good faith in the Committee's work; and

(4) The reasons that the persons nominated in this notice above do not adequately represent the interests of the person submitting the application or nomination.

All nominations and written comments must be sent to an appropriate address as listed in the **ADDRESSES** section of this notice.

Certification

For the above reasons, I hereby certify that the Osage Negotiated Rulemaking Committee is in the public interest.

Date June 13, 2012.

Michael Black,

Director, Bureau of Indian Affairs.

[FR Doc. 2012–14868 Filed 6–15–12; 8:45 am]

BILLING CODE 4310–02–P

DEPARTMENT OF THE TREASURY

Internal Revenue Service

26 CFR Part 1

[REG–100276–97]

RIN 1545–AU94

Financial Asset Securitization Investment Trusts

AGENCY: Internal Revenue Service (IRS), Treasury.

ACTION: Withdrawal of notice of proposed rulemaking.

SUMMARY: This document withdraws a notice of proposed rulemaking relating to financial asset securitization trusts (FASITs). The FASIT provisions (sections 860H through 860L) of the Internal Revenue Code (Code) were repealed by Public Law 108–357, effective January 1, 2005, with a limited exception for existing FASITs.

FOR FURTHER INFORMATION CONTACT: Julanne Allen at (202) 622–3920 (not a toll-free number).

SUPPLEMENTARY INFORMATION:

Background

Section 1621(a) of the Small Business Job Protection Act of 1996, Public Law 104–188 (110 Stat. 1755 (1996)), amended the Code by adding part V (sections 860H through 860L) (the FASIT provisions) to subchapter M of chapter 1. Part V, which was effective September 1, 1997, authorized a securitization vehicle called a Financial Asset Securitization Investment Trust (FASIT). FASITs were meant to facilitate the securitization of debt instruments, such as credit card receivables, home equity loans, and auto loans.

Proposed regulations providing guidance with respect to the application of the FASIT provisions were published in the **Federal Register** on February 7, 2000 (65 FR 5807). (Section 1.860E–1(c) of the proposed regulations, governing the transfer of non-economic REMIC residual interests, was finalized on July 18, 2002, in T.D. 9004.) In general, the proposed regulations pertaining to FASITs are proposed to be applicable on the date final regulations are filed with the **Federal Register**. The portion of the proposed regulations containing an anti-abuse rule and the portion of the proposed regulations implementing special transition rules for securitization entities in existence on August 31, 1997, were proposed to apply on February 4, 2000.

The FASIT provisions were repealed by section 835(a) of the American Jobs Creation Act of 2004, Public Law 108–357 (118 Stat. 1418 (2004)), effective January 1, 2005. During the period of legislative consideration of the FASIT provisions and subsequently, other structures for loan securitizations were developed. In its discussion of the reasons for the repeal of the FASIT provisions, the Ways and Means Committee stated:

> The Committee is aware that FASITs are not being used widely in the manner envisioned by the Congress and, consequently, the FASIT rules have not served the purposes for which they originally were intended. Moreover, the Joint Committee staff's report [on its investigation of Enron Corporation and related entities] and other information indicate that FASITS are particularly prone to abuse and likely are being used to facilitate tax avoidance transactions.

H.R. Rep. No. 108–548, Pt. 1, at 295 (2004) (footnote omitted).

In light of the repeal of the FASIT provisions and their limited use, the Treasury Department and the IRS have decided to withdraw the proposed regulations.

Drafting Information

The principal authors of this withdrawal notice are Richard LaFalce and Julanne Allen of the Office of the Associate Chief Counsel (Financial Institutions and Products).

List of Subjects in 26 CFR Part 1

Income taxes, Reporting and recordkeeping requirement.

Withdrawal of Notice of Proposed Rulemaking

Accordingly, under the authority of 26 U.S.C. 7805, the notice of proposed rulemaking (REG–100276–97) published in the **Federal Register** on February 7, 2000 (65 FR 5807) is withdrawn.

Steven T. Miller,

Deputy Commissioner for Services and Enforcement.

[FR Doc. 2012–14788 Filed 6–15–12; 8:45 am]

BILLING CODE 4830–01–P

DEPARTMENT OF THE TREASURY

Internal Revenue Service

26 CFR Part 1

[REG–141075–09]

RIN 1545–BJ15

Property Transferred in Connection With the Performance of Services Under Section 83

Correction

In proposed rule document 2012–12855 appearing on pages 31783–31786 in the issue of Wednesday, May 30, 2012 make the following correction:

On page 31785, in the second column, in the fifth full paragraph, the authority citation ''26 U.S.C. 7805.'' should read ''26 U.S.C. 7805 * * *''.

[FR Doc. C1–2012–12855 Filed 6–15–12; 8:45 am]

BILLING CODE 1505–01–D

DEPARTMENT OF THE TREASURY

Internal Revenue Service

26 CFR Parts 20 and 25

[REG–141832–11]

RIN 1545–BK74

Portability of a Deceased Spousal Unused Exclusion Amount

AGENCY: Internal Revenue Service (IRS), Treasury.

ACTION: Notice of proposed rulemaking by cross-reference to temporary regulations and notice of public hearing.

SUMMARY: In the Rules and Regulations section of this issue of the **Federal Register**, the IRS is issuing temporary regulations that provide guidance on the estate and gift tax applicable exclusion amount, in general, as well as on the applicable requirements for electing portability of a deceased spousal unused exclusion (DSUE) amount to the surviving spouse and on the applicable rules for the surviving spouse's use of this DSUE amount. The text of the temporary regulations also serves as the text of the proposed regulations set forth in this notice of proposed rulemaking. This document also provides a notice of public hearing on these proposed regulations.

DATES: Written or electronic comments must be received by September 17, 2012. Outlines of topics to be discussed at the public hearing scheduled for October 18, 2012, at 10 a.m., must be received by September 27, 2012.

ADDRESSES: Send submissions to CC:PA:LPD:PR (REG–141832–11), Room 5205, Internal Revenue Service, P.O. Box 7604, Ben Franklin Station, Washington, DC 20044. Submissions may be hand-delivered Monday through Friday between the hours of 8 a.m. and 4 p.m. to CC:PA:LPD:PR (REG–141832–11), Courier's Desk, Internal Revenue Service, 1111 Constitution Avenue NW., Washington, DC; or sent electronically via the Federal eRulemaking Portal at *http://www.regulations.gov* (IRS–REG–141832–11). The public hearing will be held in the IRS Auditorium, Internal Revenue Building, 1111 Constitution Avenue NW., Washington, DC.

FOR FURTHER INFORMATION CONTACT: Concerning the proposed regulations, Karlene Lesho at (202) 622–3090; concerning the submission of comments, the hearing, or to be placed on the building access list to attend the hearing, Oluwafunmilayo Taylor at (202) 622–7180 (not toll-free numbers).

SUPPLEMENTARY INFORMATION:

Paperwork Reduction Act

The collection of information contained in this notice of proposed rulemaking has been approved by the Office of Management and Budget, in accordance with the Paperwork Reduction Act of 1995 (44 U.S.C. 3507(d)), under Form 706, ''United States Estate (and Generation-Skipping Transfer) Tax Return,'' and assigned control number 1545–0015.

Comments on the collection of information should be sent to the Office of Management and Budget, Attn: Desk Officer for the Department of the Treasury, Office of Information and Regulatory Affairs, Washington, DC 20503, with copies to the Internal Revenue Service, Attn: IRS Reports Clearance Officer, SE:W:CAR:MP:T:T:SP, Washington, DC 20224. Comments on the collection of information should be received by August 17, 2012. Comments are specifically requested concerning:

Whether the proposed collection of information is necessary for the proper performance of the functions of the IRS, including whether the information will have practical utility;

The accuracy of the estimated burden associated with the proposed collection of information;

How the quality, utility, and clarity of the information to be collected may be enhanced;

How the burden of complying with the proposed collections of information may be minimized, including through the application of automated collection techniques or other forms of information technology; and

Estimates of capital or start-up costs of operation, maintenance, and purchase of service to provide information.

The collection of information in this proposed regulation is in proposed §§ 20.2010–2(a), 20.2010–2(a)(1), 20.2010–2(a)(3)(i), 20.2010–2(a)(7)(ii)(B), and 20.2010–2(b). The information in §§ 20.2010–2(a), 20.2010–2(a)(1), and 20.2010–2(b) as it affects estates not otherwise required to file an estate tax return under section 6018(a) is necessary in order for an executor of a decedent's estate to elect portability of a DSUE amount to the surviving spouse. The information in § 20.2010–2(a)(3)(i) is necessary in order for an executor of a decedent's estate to signify that the estate is not electing portability of a DSUE amount to the surviving spouse. The information in § 20.2010–2(a)(7)(ii)(B) is necessary in order to evaluate whether an estate qualifies for a special rule relating to applicable estate tax return requirements. The collection of information is voluntary to obtain a benefit. The likely respondents are executors of estates of decedents having a date of death in 2011 or 2012 or any subsequent period in which portability of a DSUE amount is in effect.

An agency may not conduct or sponsor, and a person is not required to respond to, a collection of information unless the collection of information displays a valid control number assigned by the Office of Management and Budget.

Books or records relating to a collection of information must be retained as long as their contents may become material in the administration of any internal revenue law. Generally, tax returns and tax return information are confidential, as required by 26 U.S.C. 6103.

Background

The temporary regulations in the Rules and Regulations section of this issue of the **Federal Register** make additions to the Estate Tax Regulations (26 CFR part 20) under sections 2001 and 2010 of the Internal Revenue Code (Code) and Gift Tax Regulations (26 CFR part 25) under section 2505 of the Code. The temporary regulations provide guidance on the estate and gift tax applicable credit amount under sections 2010 and 2505 of the Code. In addition, the temporary regulations provide guidance on the portability of a deceased spousal unused exclusion (DSUE) amount under section 2010(c) of the Code, including the applicable requirements for electing portability of a DSUE amount to the surviving spouse,

for computing the deceased spouse's DSUE amount, and for the surviving spouse's use of the DSUE amount. The text of those regulations also serves as the text of these regulations. The preamble to the temporary regulations explains the temporary regulations and these proposed regulations.

Special Analyses

It has been determined that this notice of proposed rulemaking is not considered a significant regulatory action as defined in Executive Order 12866, as supplemented by Executive Order 13563. Therefore, a regulatory flexibility assessment is not required. In addition, section 553(b) of the Administrative Procedure Act (5 U.S.C. chapter 5) does not apply to these regulations. It is hereby certified that the collection of information contained in this regulation will not have a significant economic impact on a substantial number of small entities. This certification is based on the fact that these regulations primarily affect estates of a decedent which generally are not small entities under the Act. Thus, we do not expect a substantial number of small entities to be effected. Therefore, a Regulatory Flexibility Analysis under the Regulatory Flexibility Act (5 U.S.C. chapter 6) is not required. Pursuant to section 7805(f) of the Code, this notice of proposed rulemaking has been submitted to the Chief Counsel for Advocacy of the Small Business Administration for comment on its impact on small business.

Comments and Public Hearing

Before these proposed regulations are adopted as final regulations, consideration will be given to any written comments (a signed original and eight (8) copies) or electronic comments that are submitted timely to the IRS as prescribed in this preamble under the **ADDRESSES** heading. The IRS and the Treasury Department request comments on all aspects of the proposed rules. All comments will be available at *www.regulations.gov* or for public inspection and copying.

A public hearing has been scheduled for October 18, 2012, in the IRS auditorium, Internal Revenue Building, 1111 Constitution Avenue NW., Washington, DC. Due to building security procedures, visitors must enter at the Constitution Avenue entrance. In addition, all visitors must present photo identification to enter the building. Because of access restrictions, visitors will not be admitted beyond the immediate entrance more than 30 minutes before the hearing starts. For information about having your name placed on the building access list to attend the hearing, see the **FOR FURTHER INFORMATION CONTACT** section of this preamble.

The rules of 26 CFR 601.601(a)(3) apply to the hearing. Persons who wish to present oral comments at the hearing must submit electronic or written comments (a signed original and eight (8) copies) and an outline of the topics to be discussed and the time to be devoted to each topic by September 27, 2012. A period of 10 minutes will be allotted to each person for making comments. An agenda showing the scheduling of the speakers will be prepared after the deadline for receiving outlines has passed. Copies of the agenda will be available free of charge at the hearing.

Drafting Information

The principal author of these regulations is Karlene Lesho, Office of the Associate Chief Counsel (Passthroughs and Special Industries). Other personnel from the IRS and the Treasury Department participated in their development.

List of Subjects

26 CFR Part 20

Estate taxes, Reporting and recordkeeping requirements.

26 CFR Part 25

Gift taxes, Reporting and recordkeeping requirements.

Proposed Amendments to the Regulations

Accordingly, 26 CFR parts 20 and 25 are proposed to be amended as follows:

PART 20—ESTATE TAX; ESTATE OF DECEDENTS DYING AFTER AUGUST 16, 1954

Paragraph 1. The authority citation for part 20 is amended by adding entries in numerical order to read as follows:

Authority: 26 U.S.C. 7805. * * *

Section 20.2010–0 also issued under 26 U.S.C. 2010(c)(6).

Section 20.2010–1 also issued under 26 U.S.C. 2010(c)(6).

Section 20.2010–2 also issued under 26 U.S.C. 2010(c)(6).

Section 20.2010–3 also issued under 26 U.S.C. 2010(c)(6). * * *

Par. 2. Section 20.2001–2 is added to read as follows:

§ 20.2001–2 Valuation of adjusted taxable gifts for purposes of determining the deceased spousal unused exclusion amount of last deceased spouse.

[The text of the proposed amendments to § 20.2001–2(a) and (b) is the same as the text of § 20.2001–2T(a) and (b) published elsewhere in this issue of the **Federal Register**].

Par. 3. Section 20.2010–0 is added to read as follows:

§ 20.2010–0 Table of contents.

[The entries in the table of contents for the proposed amendments to § 20.2010–0 are the same as the entries in the table of contents for § 20.2010–0T published elsewhere in this issue of the **Federal Register**].

Par. 4. Section 20.2010–1 is added to read as follows:

§ 20.2010–1 Unified credit against estate tax; in general.

[The text of the proposed amendments to § 20.2010–1(a) through (e) is the same as the text of § 20.2010–1T(a) through (e) published elsewhere in this issue of the **Federal Register**].

Par. 5. Section 20.2010–2 is added to read as follows:

§ 20.2010–2 Portability provisions applicable to estate of a decedent survived by a spouse.

[The text of the proposed amendments to § 20.2010–2(a) through (e) is the same as the text of § 20.2010–2T(a) through (e) published elsewhere in this issue of the **Federal Register**].

Par. 6. Section 20.2010–3 is added to read as follows:

§ 20.2010–3 Portability provisions applicable to the surviving spouse's estate.

[The text of the proposed amendments to § 20.2010–3(a) through (f) is the same as the text of § 20.2010–3T(a) through (f) published elsewhere in this issue of the **Federal Register**].

PART 25—GIFT TAX; GIFTS MADE AFTER DECEMBER 31, 1954

Par. 7. The authority citation for part 25 is amended by adding an entry in numerical order to read as follows:

Authority: 26 U.S.C. 7805.

Section 25.2505–2T also issued under 26 U.S.C. 2010(c)(6). * * *

Par. 8. Section 25.2505–0 is added to read as follows:

§ 25.2505–0 Table of contents.

[The entries in the table of contents for the proposed amendments to § 25.2505–0 are the same as the entries in the table of contents for § 25.2505–0T published elsewhere in this issue of the **Federal Register**].

Par. 9. Section 25.2505–1 is added to read as follows:

§ 25.2505–1 Unified credit against gift tax; in general.

[The text of the proposed amendments to § 25.2505–1(a) through

(e) is the same as the text of § 25.2505–1T(a) through (e) published elsewhere in this issue of the **Federal Register**].

Par. 10. Section 25.2505–2 is added to read as follows:

§ 25.2505–2 Gifts made by a surviving spouse having a DSUE amount available.

[The text of the proposed amendments to § 25.2505–2(a) through (g) is the same as the text of § 25.2505–2T(a) through (g) published elsewhere in this issue of the **Federal Register**].

Steven T. Miller,

Deputy Commissioner for Services and Enforcement.

[FR Doc. 2012–14775 Filed 6–15–12; 8:45 am]

BILLING CODE 4830–01–P

ARCHITECTURAL AND TRANSPORTATION BARRIERS COMPLIANCE BOARD

36 CFR Part 1191

[Docket No. ATBCB–2012–0004]

RIN 3014–AA39

Americans With Disabilities Act (ADA) and Architectural Barriers Act (ABA) Accessibility Guidelines; Emergency Transportable Housing Units

AGENCY: Architectural and Transportation Barriers Compliance Board.

ACTION: Notice of proposed rulemaking.

SUMMARY: The Architectural and Transportation Barriers Compliance Board (Access Board) proposes to amend the Americans with Disabilities Act (ADA) and Architectural Barriers Act (ABA) Accessibility Guidelines to specifically address emergency transportable housing units that are provided by the Federal Emergency Management Agency or other entities on a temporary site in response to an emergency need for temporary housing. The proposed amendments seek to ensure that newly constructed and altered emergency transportable housing units covered by the ADA or ABA are readily accessible to and usable by individuals with disabilities. Other federal agencies are required to issue enforceable accessibility standards for the construction and alteration of facilities covered by the ADA or ABA that are consistent with the ADA and ABA Accessibility Guidelines. When the other federal agencies amend their accessibility standards to be consistent with the proposed amendments to the ADA and ABA Accessibility Guidelines, newly constructed and altered emergency transportable housing units covered by the ADA or ABA would be required to comply with the accessibility standards as amended.

DATES: Submit comments by August 17, 2012. A hearing will be held on the proposed amendments on July 11, 2012, 9:30 to 11:30 a.m. To pre-register to testify please contact Kathy Johnson at (202) 272–00041 (voice), (202) 272–0065 (TTY), or *johnson@access-board.gov.* Witnesses can testify in person or by telephone. More information and any updates to the hearings will be posted on the Access Board's Web site at *http://www.access-board.gov/eth/.*

ADDRESSES: Submit comments by any of the following methods:

- *Federal eRulemaking Portal: http://www.regulations.gov.* Follow the instructions for submitting comments. *Regulations.gov* ID for this docket is ATBCB–2012–0004.
- *Email: docket@access-board.gov.* Include docket number ATBCB–2012–0004 in the subject line of the message.
- *Fax:* 202–272–0081.
- *Mail or Hand Delivery/Courier:* Office of Technical and Informational Services, Access Board, 1331 F Street NW., Suite 1000, Washington, DC 20004–1111.

All comments, including any personal information provided, will be posted without change to *http://www.regulations.gov* and are available for public viewing.

The hearing location is Access Board Conference Room, 1331 F Street NW., Suite 800, Washington, DC 20004.

FOR FURTHER INFORMATION CONTACT: Marsha Mazz, Office of Technical and Information Services, Architectural and Transportation Barriers Compliance Board, 1331 F Street NW., Suite 1000, Washington, DC 20004–1111. Telephone numbers: (202) 272–0020 (voice); (202) 272–0076 (TTY). Email address: *mazz@access-board.gov.* These are not toll free numbers.

SUPPLEMENTARY INFORMATION:

Table of Contents

1. Public Participation and Request for Comments
2. Executive Summary
3. Statutory and Regulatory Background
4. Advisory Committee
5. Issues Discussed by the Advisory Committee That Are Not Addressed in the Proposed Rule
6. Discussion of Proposed Amendments
7. Regulatory Analyses

1. Public Participation and Request for Comments

The Access Board encourages all persons interested in the rulemaking to submit comments on the proposed amendments and the questions in the preamble. Instructions for submitting and viewing comments are provided above under **ADDRESSES**. The Access Board will consider all the comments and may change the proposed amendments based on the comments.

2. Executive Summary

ADA and ABA Accessibility Guidelines

Section 502 of the Rehabilitation Act requires the Access Board to develop and maintain accessibility guidelines to ensure that the construction and alteration of facilities covered by the Americans with Disabilities Act (ADA) or the Architectural Barriers Act (ABA) are readily accessible to and usable by individuals with disabilities. See 29 U.S.C. 792(b)(3). The Access Board's current accessibility guidelines for facilities were issued in 2004 and are known as the ADA and ABA Accessibility Guidelines. Other federal agencies are required to issue enforceable accessibility standards for the construction and alteration of facilities covered by the ADA or ABA that are consistent with the ADA and ABA Accessibility Guidelines. Newly constructed and altered facilities covered by the ADA or ABA are required to comply with the accessibility standards issued by the other agencies.

The ADA and ABA Accessibility Guidelines contain scoping and technical provisions for residential dwelling units. The scoping provisions specify the minimum number of units required to provide mobility features for individuals with mobility disabilities and the minimum number of units required to provide communication features for individuals who are deaf or have a hearing loss, as well as the accessible features to be provided within each type of unit. The technical provisions specify the design criteria for accessible features within the units.

Purpose of Proposed Rule

Emergency transportable housing units provided by the Federal Emergency Management Agency (FEMA) in the aftermath of Hurricanes Katrina and Rita raised issues regarding the application of the scoping and technical provisions for residential dwelling units to emergency transportable housing units. Emergency transportable housing units are used to provide temporary housing and are not intended to be used as permanent dwellings. They are prefabricated so they can be deployed rapidly in response to an emergency and are installed on temporary sites with minimal site preparation. They are

transported on a single transport vehicle over roadways, which results in size and space limitations. Emergency transportable housing units provided in the aftermath of Hurricanes Katrina and Rita typically were about 400 square feet.

The proposed rule would amend the ADA and ABA Accessibility Guidelines to treat emergency transportable housing units as a subclass of residential dwelling units and would add new scoping and technical provisions for such units. The proposed rule also would amend existing scoping provisions for operable parts and platform lifts, and existing technical provisions for ramps, kitchens, and bathrooms to specifically address emergency transportable housing units.

Summary of Major Proposed Provisions

The major proposed provisions for emergency transportable housing units required to provide mobility features and emergency transportable housing units required to provide communication features are summarized separately in the tables below.

EMERGENCY TRANSPORTABLE HOUSING UNITS REQUIRED TO PROVIDE MOBILITY FEATURES

Major proposed provisions	Summary	Justification—benefits
Scoping 233.3.1.2, F233.3.1.2, F233.4.1.2.	Existing scoping provisions applicable to facilities with residential dwelling units provided by entities not subject to regulations issued by HUD under Section 504 of the Rehabilitation Act currently require at least 5 percent of the units to provide mobility features. These scoping provisions currently apply to emergency transportable housing units. The proposed new scoping provisions would require emergency transportable housing units with mobility features to be provided in accordance with regulations implementing Section 504 of the Rehabilitation Act, the Robert T. Stafford Disaster Relief and Emergency Assistance Act, and the ADA. These regulations prohibit discrimination on the basis of disability. Compliance with these regulations would ensure that individuals with mobility disabilities who need units with mobility features are provided such units.	When individuals and households apply for temporary housing assistance from FEMA, their needs are assessed and they are assigned emergency transportable housing units based on their assessed needs. The proposed new scoping provisions would allow for flexibility to provide emergency transportable housing units with mobility features based on assessed needs.
Ramps: Exception 2 to 405.2, Exception to 405.6.	The proposed new exceptions to the technical provisions for ramps would permit a steeper and longer entry ramp for single unit installations of emergency transportable housing units at private home sites where existing physical or site constraints would prohibit the installation of an entry ramp that complies with the technical provisions for ramps.	The floor level of emergency transportable housing units is elevated above the ground. Ramps are installed at the entrances to units with mobility features. If sufficient space is not available on a private home site to install an entry ramp that complies with the technical provisions for ramps, a unit with mobility features may not be provided at the site. The proposed new exceptions would allow a steeper and longer entry ramp in such situations so individuals with mobility disabilities can have units with mobility features provided at their private home sites while their homes are rebuilt and avoid relocation to a group site.
Kitchen Work Surface Exception to 804.3.	The proposed new exception would permit a kitchen table complying with the technical provisions for tables, all kitchen counter tops at 34 inches high maximum, and an electrical outlet within reach of the table to be provided instead of a kitchen work surface complying with the technical provisions for kitchen work surfaces.	Kitchens in emergency transportable housing units have limited storage space. A kitchen work surface complying with the technical provisions for kitchen work surfaces would reduce the storage space. The proposed new exception would provide accessible kitchen work surfaces for individuals with mobility disabilities without reducing the storage space.
Kitchen Counter Top Electrical Outlets: Exception 3 to 205.1, Exception 3 to F205.1.	Existing exceptions currently permit one of the electrical outlets provided above a length of kitchen counter top that is uninterrupted by a sink or appliance to not comply with the technical provisions for operable parts. The proposed rule would amend these exceptions so they would not apply to emergency transportable housing units required to provide mobility features. This may result in electrical outlets installed in the face of kitchen base cabinets.	Kitchens in emergency transportable housing units have fewer electrical outlets than kitchens in other types of residential dwelling units. The proposed amendments to the existing exceptions would make all the electrical outlets accessible to and usable by individuals with mobility disabilities.
Water Shut-Off Valve: Exception 11 to 205.1 Exception 11 to F205.1.	The proposed new exceptions would permit a single water shut-off valve complying with the technical provisions for clear floor space and reach ranges to be provided in emergency transportable housing units required to provide mobility features.	Space constraints in emergency transportable housing units can limit access to water shut-off valves in kitchens and bathrooms. The proposed new exceptions would provide access to a single water shut-off valve for individuals with mobility disabilities.
Kitchen Sink Water Spray Unit: 606.4.	The proposed new provision would require a water spray unit to be provided at the kitchen sink in emergency transportable housing units required to provide mobility features.	The proposed new provision would facilitate dish washing by individuals with limited reach and dexterity.
Folding Seat in Roll-In Shower: 608.4.	The proposed new provision would require a folding seat to be provided in a roll-in shower in emergency transportable housing units required to provide mobility features.	The proposed new provision would enable individuals with mobility disabilities to use roll-in showers if shower chairs are unavailable in the aftermath of a disaster.

EMERGENCY TRANSPORTABLE HOUSING UNITS REQUIRED TO PROVIDE MOBILITY FEATURES—Continued

Major proposed provisions	Summary	Justification—benefits
Bedrooms: 809.2.4.1, 809.2.4.2.	The proposed new provisions would: • Require clear floor space positioned for a parallel approach to be located on one side of a bed and to be on an accessible route; and • Prohibit accessible routes, maneuvering clearances, and turning spaces in bedrooms less than 70 square feet from overlapping space occupied by furniture supplied with the unit in emergency transportable housing units required to provide mobility features.	The proposed new provisions would make the bedrooms accessible to and usable by individuals with mobility disabilities.
Bedroom Lighting Control: 809.2.4.3.	The proposed new provision would require a means to control at least one source of lighting in the bedroom from the bed in emergency transportable housing units required to provide mobility features.	Bedrooms in emergency transportable housing units typically provide overhead lighting controlled by a wall switch near the bedroom door. The proposed new provision would result in providing a bedside lamp, an additional wall switch near the bed, or remote control device that can be operated from the bed so individuals with mobility disabilities can transfer in and out of bed safely.
Weather Alert Systems: 809.2.5.	The proposed new provision would require weather alert systems provided in emergency transportable housing units required to provide mobility features to comply with the technical provisions for clear floor space and reach ranges.	The proposed new provision would make the weather alert systems accessible to and usable by individuals with mobility disabilities.

EMERGENCY TRANSPORTABLE HOUSING UNITS REQUIRED TO PROVIDE COMMUNICATION FEATURES

Major provisions	Summary	Justification—benefits
Scoping: 233.3.2.2, F233.3.2.2, F233.4.2.2.	Existing scoping provisions applicable to facilities with residential dwelling units provided by entities not subject to regulations issued by HUD under Section 504 of the Rehabilitation Act currently require at least 2 percent of the units to provide communication features. These scoping provisions currently apply to emergency transportable housing units. The proposed new scoping provisions would require emergency transportable housing units with communication features to be provided in accordance with regulations implementing Section 504 of the Rehabilitation Act, the Robert T. Stafford Disaster Relief and Emergency Assistance Act, and the ADA. These regulations prohibit discrimination on the basis of disability. Compliance with these regulations would ensure that individuals who are deaf or have a hearing loss and need units with communication features are provided such units.	When individuals and households apply for temporary housing assistance from FEMA, their needs are assessed and they are assigned emergency transportable housing units based on their assessed needs. The proposed new scoping provisions would allow for flexibility to provide emergency transportable housing units with communication features based on assessed needs.
Residential Dwelling Unit Smoke Alarms: 809.3.1.2.	The proposed new provision would require residential dwelling unit smoke alarms with built-in visible alarms to provide either a commercial light and power source along with a secondary power source, or a non-commercial alternating current power source along with a secondary power source.	The proposed new provision is consistent with the National Fire Protection Association (NFPA) 72 National Fire Alarm Code. It would ensure that residential dwelling unit smoke alarms with built-in visible alarms have a secondary power source in the event the primary power source fails so that individuals who are deaf or have a hearing loss are alerted when the alarms are activated.
Weather Alert Systems: 809.3.4.	The proposed new provision would require weather alert systems provided in emergency transportable housing units required to provide communication features to provide both audible and visible output.	The proposed new provision would make the weather alert systems accessible to and usable by individuals who are deaf or have a hearing loss.

Entities Affected by Proposed Rule

The Robert T. Stafford Disaster Relief and Emergency Assistance Act authorizes FEMA to provide temporary housing assistance to individuals and households in response to a major disaster or emergency declared by the President. See 42 U.S.C. 5174 and 5192. FEMA provides emergency transportable housing units where there is a need for temporary housing and a lack of available housing resources in the affected area. A review of the Web sites of state agencies and nongovernmental organizations that provide services in response to disasters did not show that these entities currently provide emergency transportable housing units.

Question 1. Do state, local, or tribal governments or nongovernmental organizations provide emergency transportable housing units in response to disasters?

Emergency transportable housing units provided by FEMA are covered by

the ABA and are required to comply with the accessibility standards for residential facilities issued by the Department of Housing and Urban Development (HUD). See 42 U.S.C. 4151 and 4153. HUD's current accessibility standards for residential facilities are the Uniform Federal Accessibility Standards (UFAS). When HUD updates its accessibility standards for residential facilities to be consistent with the ADA and ABA Accessibility Guidelines, newly constructed and altered emergency transportable housing provided by FEMA would be required to comply with HUD's updated accessibility standards.

The Access Board has prepared a preliminary regulatory assessment for the proposed rule. The regulatory assessment is available on the Access Board's Web site at: *http://www.access-board.gov/eth/index.htm.* The regulatory assessment estimates the additional costs that would be incurred by FEMA assuming HUD updates its accessibility standards for residential facilities to be consistent with the ADA and ABA Accessibility Guidelines, as amended by the proposed rule. The additional costs that would be incurred by FEMA are discussed in the Regulatory Analyses section of the preamble. Based on the regulatory assessment, the Access Board has determined that the proposed rule is not an economically significant regulatory action.

3. Statutory and Regulatory Background

Section 502 of the Rehabilitation Act requires the Access Board to develop and maintain accessibility guidelines to ensure that the construction and alteration of facilities covered by the Americans with Disabilities Act (ADA) or the Architectural Barriers Act (ABA) are readily accessible to and usable by individuals with disabilities. See 29 U.S.C. 792(b)(3). The Access Board's current accessibility guidelines for facilities were issued in 2004 and are known as the ADA and ABA Accessibility Guidelines. See 36 CFR part 1191.

Title II of the ADA covers state and local government facilities, and Title III of the ADA covers public accommodations and commercial facilities. See 42 U.S.C. 12101 *et seq.* The Department of Justice (DOJ) and Department of Transportation (DOT) are required to issue enforceable accessibility standards for the construction and alteration of facilities covered by Titles II and III of the ADA that are consistent with the ADA and ABA Accessibility Guidelines.[1] DOJ and DOT have adopted the ADA and ABA Accessibility Guidelines, with additions and modifications, as the accessibility standards for facilities covered by Titles II and III of the ADA.[2]

The ABA covers facilities designed, constructed, or altered with federal funds, and facilities leased by federal agencies. See 42 U.S.C. 4151 *et seq.* The Department of Housing and Urban Development (HUD), Department of Defense (DOD), United States Postal Service (USPS), and General Services Administration (GSA) are responsible for issuing enforceable accessibility standards for the construction, alteration, and leasing of facilities covered by the ABA that are consistent with the ADA and ABA Accessibility Guidelines.[3] DOD, USPS, and GSA have adopted the ADA and ABA Accessibility Guidelines as the accessibility standards for facilities covered by the ABA.[4] HUD's current accessibility standards for residential facilities covered by the ABA are the Uniform Federal Accessibility Standards (UFAS).[5] HUD plans to update its accessibility standards for residential facilities covered by the ABA to be consistent with the ADA and ABA Accessibility Guidelines.

The federal agencies that issue accessibility standards for facilities covered by the ADA or ABA are represented on the Access Board. They were involved in the development of the proposed rule to minimize any differences between the proposed rule and eventual updates to their accessibility standards. FEMA also was involved in the development of the proposed rule.

4. Advisory Committee

In August 2007, the Access Board established an advisory committee comprised of disability rights advocates, manufacturers of emergency transportable housing units, and federal agencies (DOJ, HUD, and FEMA) to make recommendations for amending the ADA and ABA Accessibility Guidelines to address issues regarding the accessibility of emergency transportable housing units that were raised in the aftermath of Hurricanes Katrina and Rita. The committee submitted its report to the Access Board in November 2008. The proposed rule is based on the committee's report. The committee's report is available on the Access Board's Web site at: *http://www.access-board.gov/eth/index.htm.*

5. Issues Discussed by the Advisory Committee That Are Not Addressed in the Proposed Rule

The issues noted below were discussed by the advisory committee but are not addressed in the proposed rule.

Indoor Environmental Quality

The advisory committee included members representing individuals with disabilities who have multiple chemical sensitivities. The committee discussed issues related to the indoor environmental quality of emergency transportable housing units, particularly the formaldehyde levels in the units, but did not reach a consensus on the issues.

Formaldehyde is present in many products used in homes. Pressed wood products containing formaldehyde-based resins used in construction and furnishings are the primary contributors of household airborne formaldehyde. Prolonged exposure to elevated levels of formaldehyde can cause health risks.[6] At FEMA's request, the Centers for Disease Control and Prevention tested a random sample of travel trailers, park models, and manufactured homes in Louisiana and Mississippi in December 2007 and January 2008. The average level of formaldehyde in all the units was about 77 parts per billion (ppb) and ranged from 3 ppb to 590 ppb in individual units.[7]

[1] DOT is responsible for issuing accessibility standards for facilities used to provide designated and specified transportation services, and DOJ is responsible for issuing accessibility standards for the other facilities covered by the ADA. See 42 U.S.C. 12134, 12149, 12164, and 12186.

[2] See 28 CFR 35.104 and 35.151 for DOJ's accessibility standards for facilities covered by Title II of the ADA; 28 CFR 36.104 and 36.406 for the DOJ's accessibility standards for facilities covered by Title III of the ADA; and 49 CFR 37.9 and Appendix A to 49 CFR part 37 for DOT's accessibility standards for transportation facilities covered by Titles II and III of the ADA.

[3] HUD is responsible for issuing accessibility standards for residential facilities covered by the ABA; DOD is responsible for issuing accessibility standards for military facilities covered by the ABA; USPS is responsible for issuing accessibility standards for postal facilities covered by the ABA; and GSA is responsible for issuing accessibility standards for the other facilities covered by the ABA.

[4] See DOD Memorandum on Access for People with Disabilities (October 31, 2008) available at: *http://www.access-board.gov/ada-aba/dod-memorandum.htm* for DOD's accessibility standards; 39 CFR 254.1 and 254.2 for USPS' accessibility standards; and 41 CFR 102–76.60 through 102–76.85 for GSA's accessibility standards.

[5] See 24 CFR 40.4 for HUD's accessibility standards.

[6] The Environmental Protection Agency released a draft report on June 2, 2010 that provides scientific support and rationale for the hazard and dose-response assessment pertaining to chronic inhalation exposure to formaldehyde. The draft report is available at: *http://cfpub.epa.gov/ncea/iris_drafts/recordisplay.cfm?deid=223614.*

[7] Results of Indoor Air Quality Testing of Trailers and Mobile Homes for Formaldehyde in Mississippi

FEMA has discontinued the use of travel trailers and is phasing out the use of park models. FEMA currently purchases only manufactured homes that meet HUD's Manufactured Home Construction and Safety Standards, which include formaldehyde emission levels for plywood and particleboard materials installed in such homes. See 24 CFR 3280.308. The Formaldehyde Standards for Composite Wood Products Act, which was enacted into law on July 7, 2010, establishes limits for formaldehyde emissions from composite wood products, including hardwood plywood, medium-density fiberboard, and particleboard. See 15 U.S.C. 2697. The composite wood products formaldehyde standards in the law mirror the standards previously established by the California Air Resources Board for products sold, offered for sale, supplied, used, or manufactured for sale in California.[8] These developments should result in the reduction of formaldehyde levels in emergency transportable housing units, as well as other facilities.

Slide-Outs

Some emergency transportable housing units provide additional space within the unit by extending a floor and wall section to one side when the unit is installed on a site. This feature is known as a ''slide-out.'' The advisory committee was concerned that if slide-outs are provided in emergency transportable housing units required to provide mobility features, they may not meet the existing technical provisions for floor surfaces and changes in level in 302 and 303 of the ADA and ABA Accessibility Guidelines. These provisions currently require floor surfaces to be stable, firm, and slip resistant, and changes in level to be not greater than ¼ inch vertical and ½ inch beveled on accessible routes and in accessible spaces. The slide-out joint cover and the joint between the unit floor and the slide-out floor would need to be almost flush to meet these provisions. With careful design and installation, slide-outs can meet these provisions.

Some slide-outs need to be cycled periodically for preventative maintenance. This maintenance operation could be difficult for occupants with disabilities to perform. Committee members representing manufacturers noted that electric and hydraulic slide-outs do not need to be cycled. The committee recommended that slide outs should be allowed in emergency transportable housing units required to provide mobility features only where the manufacturer's warranty indicates that the slide-out does not need to be cycled after set-up and the floor surfaces and changes in level between floors meet the technical provisions for floor surfaces and changes in level in 302 and 303 of the ADA and ABA Accessibility Guidelines.

Slide-outs are a useful design option given the space constraints within emergency transportable housing units. Although some slide-outs need to be cycled periodically for preventative maintenance, the housing provider can perform this maintenance operation. The technical provisions for floor surfaces and changes in level in 302 and 303 of the ADA and ABA Accessibility Guidelines apply to every type of facility. It is not necessary to amend these provisions to specifically apply to emergency transportable housing units required to provide mobility features.

6. Discussion of Proposed Amendments

The proposed rule would amend the ADA and ABA Accessibility Guidelines to treat emergency transportable housing units as a subclass of residential dwelling units and would add new scoping and technical provisions for such units. The proposed rule also would amend existing scoping provisions for operable parts and platform lifts, and existing technical provisions for ramps, kitchens, and bathrooms to specifically address emergency transportable housing units.

The ADA and ABA Accessibility Guidelines consist of 10 chapters that are codified as appendices to 36 CFR part 1191. The proposed amendments to the ADA and ABA Accessibility Guidelines are discussed below under the relevant chapters of the guidelines.

ADA Chapters 1 and 2 (Appendix B to 36 CFR Part 1191)

ABA Chapters 1 and 2 (Appendix C to 36 CFR Part 1191)

ADA Chapters 1 and 2 contain application and scoping provisions for facilities covered by the ADA, and are codified in Appendix B to 36 CFR part 1191. ABA Chapters 1 and 2 contain application and scoping provisions for facilities covered by the ABA, and are codified in Appendix C to 36 CFR part 1191. The application and scoping provisions in ABA Chapters 1 and 2 are preceded by the letter ''F'' to distinguish them from the application and scoping provisions in ADA Chapters 1 and 2. Because the same changes are proposed to the application and scoping provisions in ADA Chapters 1 and 2 and ABA Chapters 1 and 2, corresponding provisions in these chapters are discussed together.

106.5 and F106.5 Defined Terms

The proposed rule would add a new definition for the term ''emergency transportable housing unit'' in 106.5 and F106.5 to read as follows:

Emergency Transportable Housing Unit. A single or multiple section prefabricated structure that is transportable on a single transport vehicle and that can be set-up and installed on a temporary site in response to an emergency need for temporary housing. Such structures include, but are not limited to, travel trailers, park models, manufactured housing, and other factory-built housing. For the purposes of this document, emergency transportable housing units are considered a type of residential dwelling unit.

The proposed definition would consider emergency transportable housing units as a type of residential dwelling unit for purposes of the ADA and ABA Accessibility Guidelines. Some structures that would be included in the proposed definition such as travel trailers may not be considered residential dwelling units for other purposes. Advisory committee members representing manufacturers of recreational vehicles such as travel trailers did not want the definition to imply a permanent dwelling because of regulatory limitations on the use of the units. Recreational vehicles built on a single chassis and not larger than 400 square feet when measured at the largest horizontal projections are not subject to HUD's Manufactured Home Construction and Safety Standards if they are designed primarily for use as temporary living quarters for recreational, camping, travel, or seasonal use and not for use as a permanent dwelling. See 24 CFR 3282.8. As described in the proposed definition, emergency transportable housing units are used to provide temporary housing and are not intended to be used as permanent dwellings. The units typically are installed on private home sites while residents repair permanent dwellings that were rendered uninhabitable by a disaster. State or local governments may limit the amount of time that the units can remain on a site. The proposed definition would not include larger manufactured or modular

and Louisiana, FEMA (June 2009) available at: *http://www.fema.gov/media/archives/2008/021408.shtm.*

[8] California Environmental Protection Agency Air Resources Board, Airborne Toxic Control Measures to Reduce Formaldehyde Emissions from Composite Wood Products, Final Regulation Order (April 18, 2008) available at: *http://www.arb.ca.gov/regact/2007/compwood07/compwood07.htm.*

homes that are transportable on multiple transport vehicles and then attached to one another in sections on a site.

205 and F205 Operable Parts

These sections currently require operable parts located on accessible elements and accessible routes and in accessible rooms and spaces to comply with the technical provisions for operable parts in 309, including clear floor space, reach ranges, and operation. As discussed below, the proposed rule would revise existing Exception 3 and would add new Exceptions 9, 10, and 11 to 205.1 and F205.1.

Exception 3—Kitchen Countertop Electrical Outlets

The proposed rule would amend existing Exception 3 to 205.1 and F205.1 to read as follows:

Exception 3. Except within emergency transportable housing units required to provide mobility features complying with 809.2, where two or more outlets are provided in a kitchen above a length of counter top that is uninterrupted by a sink or appliance, one outlet shall not be required to comply with 309.

The National Electrical Code® (NEC) requires electrical outlets in kitchens to be installed every 4 feet and within 24 inches of a corner. This can result in at least one electrical outlet installed in a location above a kitchen counter top that cannot meet the technical provisions for obstructed reach ranges. To address this situation, where two or more electrical outlets are provided above a length of kitchen counter top that is uninterrupted by a sink or appliance, existing Exception 3 to 205.1 and F205.1 currently permits one of the outlets to not comply with the technical provisions for operable parts in 309.

The advisory committee recommended that all the electrical outlets provided at kitchen counter tops in emergency transportable housing units required to provide mobility features should comply with the technical provisions for operable parts in 309 since kitchens in such units typically have fewer electrical outlets than kitchens in other types of residential dwelling units. The NEC permits electrical outlets in accessible kitchens to be installed in the face of base cabinets provided the outlets are located not more than 12 inches below a counter top that extends not more than 6 inches beyond its base. Face-mounted electrical outlets enable an occupant with a disability to plug small appliances into the outlet without reaching across the counter top. The proposed rule would amend existing Exception 3 so that it would not apply to emergency transportable housing units required to provide mobility features since face-mounted electrical outlets can be provided.

Although face-mounted electrical outlets are more accessible to individuals with disabilities who have limited reach, the outlets and electrical cords attached to appliances are also within reach of small children and can pose a safety hazard. For this reason, face-mounted electrical outlets typically are not provided. The Access Board may reconsider the proposed amendments to existing Exception 3 to 205.1 and F205.1.

Question 2. Should the proposed amendments to existing Exception 3 to 205.1 and F205.1 be reconsidered?

Exception 9—Operable Parts in Residential Dwelling Units and Guest Rooms Not Required To Provide Mobility Features

The proposed rule would add a new Exception 9 to 205.1 and F205.1 to read as follows:

Exception 9. Operable parts located within residential dwelling units not required to provide mobility features complying with 809.2 and transient lodging guest rooms not required to provide mobility features complying with 806.2 shall not be required to comply with 309.

The proposed new exception would clarify that the technical provisions for operable parts in 309 do not apply to residential dwelling units and transient lodging guest rooms that are not required to provide mobility features. Thus, residential dwelling units and transient lodging guest rooms required to provide communications features would not be required to comply with the technical provisions for operable parts in 309.

Exception 10—Controls Beneath the Body of an Emergency Transportable Housing Unit

The proposed rule would add a new Exception 10 to 205.1 and F205.1 to read as follows:

Exception 10. In emergency transportable housing units required to provide mobility features complying with 809.2, controls located beneath the unit body shall not be required to comply with 309.

The proposed new exception would exempt controls located beneath the body of emergency transportable housing units required to provide mobility features from the technical provisions for operable parts in 309. These controls are typically for maintenance purposes and would be operated by personnel servicing the unit.

Exception 11—Water Shut-Off Valves

The proposed rule would add a new Exception 11 to 205.1 and F205.1 to read as follows:

Exception 11. In emergency transportable housing units required to provide mobility features complying with 809.2, water shut-off valves shall not be required to comply with 309 where a single shut-off valve complying with 309.2 and 309.3 is provided for the entire unit.

Space constraints in emergency transportable housing units can limit access to water shut-off valves in kitchens and bathrooms. The proposed new exception would permit a single shut-off valve that complies with the technical provisions for clear floor space in 309.2 and reach ranges in 309.3 to be provided in emergency transportable housing units required to provide mobility features.

Question 3. Can water shut-off valves comply with the technical provisions in 309.4 for operating forces not exceeding five pounds and one handed operation without tight grasping, pinching, or twisting of the wrist? If water shut-off valves cannot comply with the technical provisions in 309.4, should they be exempted from complying with the technical provisions for clear floor space in 309.2 and reach ranges in 309.3? Are there other controls typically provided within emergency transportable housing units that cannot comply with any of the technical provisions for operable parts in 309?

206.7 and F206.7 Platform Lifts

These sections currently permit platform lifts to be used as a component of an accessible route in new construction in certain situations.

The proposed rule would amend these sections to read as follows:

206.7 Platform Lifts. Platform lifts shall comply with 410. Platform lifts shall be permitted as a component of an accessible route in new construction in accordance with 206.7. Platform lifts shall be permitted as a component of an accessible route in an existing building or facility. In emergency transportable housing units, platform lifts shall not be used at the primary entrance to a unit required to provide mobility features complying with 809.2.

F206.7 Platform Lifts. Platform lifts shall comply with 410. Platform lifts shall be permitted as a component of an accessible route in new construction in accordance with F206.7. Platform lifts shall be permitted as a component of an accessible route in an existing building

or facility. In emergency transportable housing units, platform lifts shall not be used at the primary entrance to a unit required to provide mobility features complying with 809.2.

Emergency transportable housing units typically are installed on constrained sites, such as in driveways on private home sites while residents rebuild permanent dwellings that were rendered uninhabitable by a disaster. The floor level of the units is elevated above the ground and the units typically have one entrance that also serves as the only accessible means of escape from the unit in an emergency. Although safety standards typically require factory-built housing to provide a secondary means of escape, the secondary means of escape usually is not accessible to occupants with mobility disabilities.

The advisory committee recommended that platform lifts should not be used at the primary entrance to emergency transportable housing units required to provide mobility features because the time needed to operate a platform lift could cause an unnecessary delay for occupants needing to evacuate the unit quickly. The proposed rule would amend 206.7 and F206.7 to not permit the use of platform lifts at the primary entrance to emergency transportable housing units required to provide mobility features.

233 and F233 Residential Facilities

The proposed rule would add new scoping provisions to these sections for emergency transportable housing units required to provide mobility features and emergency transportable housing units required to provide communication features. The proposed rule also would add a new exception to the dispersion provision. When the final rule is published, the provisions in 233 and F233 would be renumbered to accommodate the new scoping provisions for emergency transportable housing units and the renumbered provisions would be referenced in other sections, as appropriate. The table below shows the proposed renumbering of the provisions in 233 and F233 for the final rule and where the provisions are located in the current guidelines.

Proposed renumbering of provisions for the final rule	Current guidelines
ADA Chapter 2: Scoping Requirements	
233 Residential Facilities	233 Residential Facilities
233.1 General	233.1 General
233.2 Residential Dwelling Units Provided by Entities Subject to HUD Section 504 Regulations	233.2 Residential Dwelling Units Provided by Entities Subject to HUD Section 504 Regulations
233.3 Residential Dwelling Units Provided by Entities Not Subject to HUD Section 504 Regulations 233.3.1 Residential Dwelling Units with Mobility Features 233.3.1.1 Facilities Other Than Those Containing Emergency Transportable Housing Units 233.3.1.2 Facilities Containing Emergency Transportable Housing Units 233.3.2 Residential Dwelling Units with Communication Features 233.3.2.1 Facilities Other Than Those Containing Emergency Transportable Housing Units 233.3.2.2 Facilities Containing Emergency Transportable Housing Units	233.3 Residential Dwelling Units Provided by Entities Not Subject to HUD Section 504 Regulations 233.3.1 Minimum Number: New Construction 233.3.1.1 Residential Dwelling Units with Mobility Features 233.3.1.2 Residential Dwelling Units with Communication Features
233.3.3 Residential Dwelling Units for Sale	233.3.2 Residential Dwelling Units for Sale
233.3.4 Additions	233.3.3 Additions
233.3.5 Alterations 233.3.5.1 Alterations to Vacated Buildings 233.3.5.2 Alterations to Individual Residential Dwelling Units	233.3.4 Alterations 233.3.4.1 Alterations to Vacated Buildings 233.3.4.2 Alterations to Individual Residential Dwelling Units
233.3.6 Dispersion	233.3.5 Dispersion
ABA Chapter 2: Scoping Requirements	
F233 Residential Facilities	F233 Residential Facilities
F233.1 General	F233.1 General
F233.2 Residential Dwelling Units Provided by HUD or Through Grant or Loan Programs Administered by HUD	F233.2 Residential Dwelling Units Provided by HUD or Through Grant or Loan Programs Administered by HUD
F233.3 Residential Dwelling Units Provided on Military Installations F233.3.1 Residential Dwelling Units with Mobility Features F233.3.1.1 Facilities Other Than Those Containing Emergency Transportable Housing Units F233.3.1.2 Facilities Containing Emergency Transportable Housing Units F233.3.2 Residential Dwelling Units with Communication Features F233.3.2.1 Facilities Other Than Those Containing Emergency Transportable Housing Units	F233.3 Residential Dwelling Units Provided on Military Installations F233.3.1 Minimum Number: New Construction F233.3.1.1 Residential Dwelling Units with Mobility Features F233.3.1.2 Residential Dwelling Units with Communication Features

Proposed renumbering of provisions for the final rule	Current guidelines
F233.3.2.2 Facilities Containing Emergency Transportable Housing Units	
F233.3.3 Additions F233.3.4 Alterations F233.3.4.1 Alterations to Vacated Buildings F233.3.4.2 Alterations to Individual Residential Dwelling Units	F233.3.2 Additions F233.3.3 Alterations F233.3.3.1 Alterations to Vacated Buildings F233.3.3.2 Alterations to Individual Residential Dwelling Units
F233.3.5 Dispersion	F233.3.4 Dispersion
F233.4 Residential Dwelling Units Provided by Other Federal Agencies or Through Grant or Loan Programs Administered by Other Federal Agencies F233.4.1 Residential Dwelling Units with Mobility Features F233.4.1.1 Facilities Other Than Those Containing Emergency Transportable Housing Units F233.4.1.2 Facilities Containing Emergency Transportable Housing Units F233.4.2 Residential Dwelling Units with Communication Features F233.4.2.1 Facilities Other Than Those Containing Emergency Transportable Housing Units F233.4.2.2 Facilities Containing Emergency Transportable Housing Units	F233.4 Residential Dwelling Units Provided by Other Federal Agencies or Through Grant or Loan Programs Administered by Other Federal Agencies F233.4.1 Minimum Number: New Construction F233.4.1.1 Residential Dwelling Units with Mobility Features F233.4.1.2 Residential Dwelling Units with Communication Features
F233.4.3 Residential Dwelling Units for Sale	F233.4.2 Residential Dwelling Units for Sale
F233.4.4 Additions	F233.4.3 Additions
F233.4.5 Alterations F233.4.5.1 Alterations to Vacated Buildings F233.4.5.2 Alterations to Individual Residential Dwelling Units	F233.4.4 Alterations F233.4.4.1 Alterations to Vacated Buildings F233.4.4.2 Alterations to Individual Residential Dwelling Units
F233.4.6 Dispersion	F233.4.5 Dispersion

Proposed Scoping Provisions for Emergency Transportable Housing Units Required To Provide Mobility Features (233.3.1, F233.3.1, and F233.4.1)

Existing scoping provisions applicable to facilities with residential dwelling units provided by entities not subject to regulations issued by the HUD under Section 504 of the Rehabilitation Act currently require at least 5 percent of the units to provide mobility features.[9] Where facilities contain 15 or fewer residential dwelling units, the existing scoping provisions apply to the total number of units that are constructed under a single contract or are developed as a whole, whether or not the units are located on a common site. These scoping provisions currently apply to emergency transportable housing units.

The proposed rule would add new scoping provisions for emergency transportable housing units required to provide mobility features at:

- 233.3.1 for units covered by the ADA that are provided by entities not subject to regulations issued by HUD under Section 504 of the Rehabilitation Act;
- F233.3.1 for units covered by the ABA that are provided on military installations; and
- F233.4.1 for units covered by the ABA that are provided by federal agencies, other than HUD, or through grant or loan programs administered by federal agencies, other than HUD.

The references to these provisions are as they would be renumbered when the final rule is published.

The proposed new scoping provisions read as follows:

233.3.1 Residential Dwelling Units With Mobility Features. Facilities, other than those containing emergency transportable housing units, shall comply with 233.3.1.1. Facilities containing emergency transportable housing units shall comply with 233.3.1.2. Residential dwelling units required to provide mobility features complying with 809.2 shall be on an accessible route as required by 206.

233.3.1.1 Facilities Other Than Those Containing Emergency Transportable Housing Units. At least 5 percent, but not less than one, of the total number of residential dwelling units, other than emergency transportable housing units, in the facility shall provide mobility features complying with 809.2.

Exception: Where facilities contain 15 or fewer residential dwelling units, the requirements of 233.3.1.1 shall apply to the total number of residential dwelling units that are constructed under a single contract, or are developed as a whole, whether or not located on a common site.

233.3.1.2 Facilities Containing Emergency Transportable Housing Units. Entities shall provide emergency transportable housing units with mobility features complying with 809.2 in accordance with applicable regulations implementing Section 504 of the Rehabilitation Act of 1973, as amended; the Robert T. Stafford Disaster Relief and Emergency Assistance Act of 1988, as amended; and the Americans with Disabilities Act of 1990, as amended.

F233.3.1 Residential Dwelling Units With Mobility Features. Facilities on military installations containing residential dwelling units, other than emergency transportable housing units, shall comply with F233.3.1.1. Facilities on military installations containing emergency transportable housing units shall comply with F233.3.1.2. All residential dwelling units required to provide mobility features complying with 809.2 shall be on an accessible route as required by F206.

[9] Facilities with residential dwelling units that are provided by entities subject to regulations issued by HUD under Section 504 of the Rehabilitation Act are required to provide residential dwelling units with mobility features in a number required by the applicable HUD regulations.

F233.3.1.1 Facilities Other Than Those Containing Emergency Transportable Housing Units. At least 5 percent, but not less than one, of the total number of residential dwelling units, other than emergency transportable housing units, in the facility shall provide mobility features complying with 809.2.

F233.3.1.2 Facilities Containing Emergency Transportable Housing Units. Entities shall provide emergency transportable housing units with mobility features complying with 809.2 in accordance with applicable regulations implementing Section 504 of the Rehabilitation Act of 1973, as amended; the Robert T. Stafford Disaster Relief and Emergency Assistance Act of 1988, as amended; and the Americans with Disabilities Act of 1990, as amended.

F233.4.1 Residential Dwelling Units With Mobility Features. Facilities, other than those containing emergency transportable housing units, shall comply with F233.4.1.1. Facilities containing emergency transportable housing units shall comply with F233.4.1.2. Residential dwelling units required to provide mobility features complying with 809.2 shall be on an accessible route as required by F206.

F233.4.1.1 Facilities Other Than Those Containing Emergency Transportable Housing Units. At least 5 percent, but not less than one, of the total number of residential dwelling units, other than emergency transportable housing units, in the facility shall provide mobility features complying with 809.2.

Exception: Where facilities contain 15 or fewer residential dwelling units, the requirements of F233.4.1.1 shall apply to the total number of residential dwelling units that are constructed under a single contract, or are developed as a whole, whether or not located on a common site.

F233.4.1.2 Facilities Containing Emergency Transportable Housing Units. Entities shall provide emergency transportable housing units with mobility features complying with 809.2 in accordance with applicable regulations implementing Section 504 of the Rehabilitation Act of 1973, as amended; the Robert T. Stafford Disaster Relief and Emergency Assistance Act of 1988, as amended; and the Americans with Disabilities Act of 1990, as amended.

The advisory committee recommended that 10 percent of emergency transportable housing units provided at group sites should be required to provide mobility features. Emergency transportable housing units are more often provided at private home sites than at group sites. The committee recommended no minimum number be established for single unit installations provided at private home sites because the individual need for such units could exceed the minimum number. Instead, the committee recommended that the number of emergency transportable housing units with mobility features provided for single unit installations at private home sites should be based on individual need in accordance with regulations implementing Section 504 of the Rehabilitation Act, the Robert T. Stafford Disaster Relief and Emergency Assistance Act, and the ADA.[10] These regulations prohibit discrimination on the basis of disability. Compliance with these regulations would ensure that individuals with mobility disabilities who need emergency transportable housing units with mobility features are provided such units.

The U.S. Census Bureau estimates that for the civilian noninstitutionalized population aged 5 and older living in the United States:

- 27.4 million people (11.9 percent) have difficulty with ambulatory activities of the lower body and 19.0 million people (8.2 percent) have difficulty with upper body physical tasks;
- 8.5 million people (3.7 percent) have difficulty performing one or more activities of daily living such as getting around inside the home, getting into or out of bed, taking a bath or shower, getting to or using the toilet, dressing, and eating; and
- 3.3 million (1.4 percent) used a wheelchair or other wheeled mobility device and 10.2 million (4.4 percent) used a cane, crutches, or walker to assist with mobility.[11]

The rate of physical disability varies by state and ranged from 5.9 percent in Utah to 13.5 percent in West Virginia.[12] FEMA's current policy is to have 20 percent of its inventory of emergency transportable housing units comply with UFAS, HUD's current accessibility standard for residential facilities. When individuals and households apply for temporary housing assistance from FEMA, their needs are assessed and they are assigned emergency transportable housing units based on their assessed needs. The percentage of UFAS units that FEMA provides varies widely from disaster to disaster based on assessed needs.

To allow for flexibility to provide emergency transportable housing units with mobility features based on the assessed needs of applicants, the proposed rule adopts the approach recommended by the advisory committee for single unit installations at private home sites to group sites also. The proposed new scoping provisions would require that emergency transportable housing units with mobility features be provided in accordance with regulations implementing Section 504 of the Rehabilitation Act, the Robert T. Stafford Disaster Relief and Emergency Assistance Act, and the ADA.

Proposed Scoping Provisions for Emergency Transportable Housing Units Required To Provide Communication Features (233.3.2, F233.3.2, and F233.4.2)

Existing scoping provisions applicable to facilities with residential dwelling units provided by entities not subject to regulations issued by the HUD under Section 504 of the Rehabilitation Act currently require at least 2 percent of the units to provide communication features.[13] Where facilities contain 15 or fewer residential dwelling units, the existing scoping provisions apply to the total number of units that are constructed under a single contact or are developed as a whole, whether or not the units are located on a common site. These scoping provisions currently apply to emergency transportable housing units.

The proposed rule would add new scoping provisions for emergency transportable housing units required to provide communication features at:

- 233.3.2 for units covered by the ADA that are provided by entities not subject to regulations issued by HUD under Section 504 of the Rehabilitation Act;
- F233.3.2 for units covered by the ABA that are provided on military installations; and
- F233.4.2 for units covered by the ABA that are provided by federal agencies, other than HUD, or through

[10] See 44 CFR part 16 for FEMA's regulations implementing Section 504 of the Rehabilitation Act; 44 CFR part 200 for FEMA's regulations implementing the Robert T. Stafford Disaster Relief and Emergency Assistance Act; and 28 CFR parts 35 and 36 for DOJ's regulations implementing Titles II and III of the ADA.

[11] U.S. Census Bureau, Americans with Disabilities:2005 (Issued December 2008) available at: *http://www.census.gov/prod/2008pubs/p70-117.pdf.*

[12] U. S. Census Bureau, Disability Status: 2000 (Issued March 2003) available at: *http://www.census.gov/prod/2003pubs/c2kbr-17.pdf.*

[13] Facilities with residential dwelling units that are provided by entities subject to regulations issued by HUD under Section 504 of the Rehabilitation Act are required to provide residential dwelling units with communication features in a number required by the applicable HUD regulations.

grant or loan programs administered by federal agencies, other than HUD.

The references to these provisions are as they would be renumbered when the final rule is published.

The proposed new scoping provisions read as follows:

233.3.2 Residential Dwelling Units with Communication Features. Facilities, other than those containing emergency transportable housing units, shall comply with 233.3.2.1. Facilities containing emergency transportable housing units shall comply with 233.3.2.2.

233.3.2.1 Facilities Other Than Those Containing Emergency Transportable Housing Units. At least 2 percent, but not less than one, of the total number of residential dwelling units, other than emergency transportable housing units, in the facility shall provide communication features complying with 809.3.

Exception: Where facilities contain 15 or fewer residential dwelling units, the requirements of 233.3.2.1 shall apply to the total number of residential dwelling units that are constructed under a single contract, or are developed as a whole, whether or not located on a common site.

233.3.2.2 Facilities Containing Emergency Transportable Housing Units. Entities shall provide emergency transportable housing units with residential dwelling unit smoke alarms complying with 809.3.1 and, where weather alert systems are provided, with weather alert systems complying with 809.3.4 in accordance with applicable regulations implementing Section 504 of the Rehabilitation Act of 1973, as amended; the Robert T. Stafford Disaster Relief and Emergency Assistance Act of 1988, as amended; and the Americans with Disabilities Act of 1990, as amended.

F233.3.2 Residential Dwelling Units With Communication Features. Facilities on military installations, other than those containing emergency transportable housing units, shall comply with F233.3.2.1. Facilities on military installations containing emergency transportable housing units shall comply with F233.3.2.2.

F233.3.2.1 Facilities Other Than Those Containing Emergency Transportable Housing Units. At least 2 percent, but not less than one, of the total number of residential dwelling units, other than emergency transportable housing units, in the facility shall provide communication features complying with 809.3.

F233.3.2.2 Facilities Containing Emergency Transportable Housing Units. Entities shall provide emergency transportable housing units with residential dwelling unit smoke alarms complying with 809.3.1 and, where weather alert systems are provided, with weather alert systems complying with 809.3.4 in accordance with applicable regulations implementing Section 504 of the Rehabilitation Act of 1973, as amended; the Robert T. Stafford Disaster Relief and Emergency Assistance Act of 1988, as amended; and the Americans with Disabilities Act of 1990, as amended.

F233.4.2 Residential Dwelling Units With Communication Features. Facilities, other than those containing emergency transportable housing units, shall comply with F233.4.2.1. Facilities containing emergency transportable housing units shall comply with F233.4.2.2.

F233.4.2.1 Facilities Other Than Those Containing Emergency Transportable Housing Units. At least 2 percent, but not less than one, of the total number of residential dwelling units, other than emergency transportable housing units, in the facility shall provide communication features complying with 809.3.

Exception: Where facilities contain 15 or fewer residential dwelling units, the requirements of F233.4.2.1 shall apply to the total number of residential dwelling units that are constructed under a single contract, or are developed as a whole, whether or not located on a common site.

F233.4.2.2 Facilities Containing Emergency Transportable Housing Units. Entities shall provide emergency transportable housing units with residential dwelling unit smoke alarms complying with 809.3.1 and, where weather alert systems are provided, with weather alert systems complying with 809.3.4 in accordance with applicable regulations implementing Section 504 of the Rehabilitation Act of 1973, as amended; the Robert T. Stafford Disaster Relief and Emergency Assistance Act of 1988, as amended; and the Americans with Disabilities Act of 1990, as amended.

The proposed new scoping provisions for emergency transportable housing required to provide communication features are the same as the proposed new scoping provisions for emergency transportable housing units required to provide mobility features. The proposed new scoping provisions would require that emergency transportable housing units with communication features be provided in accordance with regulations implementing Section 504 of the Rehabilitation Act, the Robert T. Stafford Disaster Relief and Emergency Assistance Act, and the ADA.

The proposed new scoping provisions would require visible smoke alarms in emergency transportable housing units required to provide communication features. FEMA currently provides visible smoke alarms in all its emergency transportable housing units. FEMA can exceed the proposed new scoping provisions. Where weather alert systems are provided in emergency transportable housing units required to provide communication features, the proposed new scoping provisions would require the systems to provide both audible and visible output. FEMA currently provides weather alert systems in all its emergency transportable housing units, and the systems provide both audible and visible output. As noted above, FEMA can exceed the proposed new scoping provisions.

233.3.6, F233.3.5, and F233.4.6 Dispersion

The proposed rule would add a new exception to the dispersion provisions in 233.3.6, F233.3.5, and F233.4.6 for emergency transportable housing units required to provide mobility features and emergency transportable housing units required to provide communication features. The references to the dispersion provisions in 233.3.6, F233.3.5, and F233.4.6 are as they would be renumbered when the final rule is published.

The proposed new exception to the dispersion provisions in 233.3.6, F233.3.5, and F233.4.6 read as follows:

Exception 2. Emergency transportable housing units required to provide mobility features complying with 809.2 shall not be required to be dispersed among the various types of residential dwelling units in a facility or to provide choices of residential dwelling units comparable to those available to other residents.

Residential dwelling units required to provide mobility features and residential dwelling units required to provide communication features currently are required to be dispersed among the various types of residential dwelling units in a facility to provide choices comparable to, and integrated with, units available to other residents. Since emergency transportable housing units with mobility features and emergency transportable housing units with communication features are provided to applicants based on their assessed needs, it is not necessary to require comparable choices of units at each facility. If two or three bedroom units with mobility features are not needed at a particular group site, they should not be provided at that site but should be provided at other group sites

or private home sites where they are needed.

The proposed rule would add a new exception to the dispersion provisions in 233.3.6, F233.3.5, and F233.4.6 that would not require emergency transportable housing units required to provide mobility features and emergency transportable housing units required to provide communication features to be dispersed among the various types of residential dwelling units in a facility. Emergency transportable housing units required to provide mobility features and emergency transportable housing units required to provide communication features would be required to be integrated with other units in a facility so individuals with disabilities and their families are not isolated or segregated at group sites.

Chapters 4, 6, and 8 (Appendix D to 36 CFR Part 1191)

Chapters 3 through 10 contain technical provisions for facilities covered by the ADA and ABA, and are codified in Appendix D to 36 CFR part 1191. As discussed below, the proposed rule would amend existing provisions in Chapters 4, 6, and 8 and also would add new provisions to these chapters.

Advisory 404.2.5 Thresholds

The proposed rule would add a new advisory note to 404.2.5 to read as follows:

Advisory 404.2.5 Thresholds. Some doors, particularly entrance doors to emergency transportable housing units, include a lip on the bottom edge of the face of the door. This design may result in a ramp landing positioned more than the allowable ½-inch maximum below the threshold.

The existing technical provisions in 404.2.5 currently require thresholds at doorways to be ½-inch high maximum and changes in level between ¼-inch high minimum and ½-inch high maximum to be beveled with a slope not steeper than 1:2. Entry doors on smaller emergency transportable housing units typically have a lip that extends approximately ⅝-inch to ¾-inch below the bottom edge of the door face. Ramps installed to provide an accessible route to the entry door typically are made from exterior grade wood that will warp over time. The ramp landing needs to be positioned below the door lip so the door can operate freely without binding against the landing surface. This can result in changes in level between the ramp landing and the entry doorway that exceed the ½-inch maximum threshold height by one inch.

The advisory committee recommended adding a new advisory note to 404.2.5 to address this situation. The proposed new advisory note would indicate that entry doors with a lip on the bottom edge of the door face may result in exceeding the ½-inch maximum threshold height. Larger emergency transportable housing units typically use entry doors more common to residential construction that meet the ½-inch maximum threshold height.

405.2 Slope and 405.6 Rise (Ramp Runs)

The proposed rule would add a new exception to the technical provision for the slope of ramp runs in 405.2 to read as follows:

Exception 2. In emergency transportable housing units, where existing physical or site constraints prohibit the installation of an entry ramp complying with 405.2, ramps shall be permitted to provide a single ramp run with a slope no steeper than 1:10 provided that the maximum rise of all ramp runs serving the unit entrance is not greater than 36 inches (915 mm) and one of the following conditions is met:

(a) The emergency transportable housing unit is located on a site containing a private home for the use of the occupant of the private home; or

(b) The emergency transportable housing unit is located on a privately-owned residential site that is designed for the later installation of a dwelling unit for the use of the owner of the site.

The proposed rule also would add a new exception to the technical provision for the rise of ramp runs in 405.6 to read as follows:

Exception: In emergency transportable housing units, where existing physical or site constraints prohibit the installation of an entry ramp complying with 405.6, ramps shall be permitted to provide a single ramp run with a rise 36 inches (915 mm) maximum provided that the one of the following conditions is met:

(a) The emergency transportable housing unit is located on a site containing a private home for the use of the occupant of the private home; or

(b) The emergency transportable housing unit is located on a privately-owned residential site that is designed for the later installation of a dwelling unit for the use of the owner of the site.

Persons whose homes have been rendered uninhabitable by a disaster prefer to have emergency transportable housing units provided on their private home sites so they can protect their property, supervise the reconstruction of their homes, and maintain relationships within their community. Federal, state, and local laws require the tires to remain on emergency transportable housing units and the floor level is typically elevated 36 inches above the ground. Entry ramps are installed at emergency transportable housing units with mobility features and the entry ramps cannot encroach on adjacent sites or public rights-of-way where the units are provided at private home sites. An entry ramp that complies with the technical provisions for ramp run slope in 405.2 (1:12 maximum) and ramp run rise in 405.6 (30 inches maximum) needs at least two ramp runs and an intermediate landing between the ramp runs. The landing would be approximately 18 square feet, and 40 square feet if the ramp needs to change direction in order to fit on the site. The entry ramp would be approximately 158 to 180 square feet depending on the landing configuration. If sufficient space is not available on a private home site to install the entry ramp, an emergency transportable housing unit with mobility features may not be provided at the site and individuals with disabilities may be relocated to a group site.

The advisory committee recommended adding new exceptions to the technical provisions for the slope and rise of ramp runs in 405.2 and 405.6 so individuals with disabilities can have an emergency transportable housing unit with mobility features provided at their private home site while their homes are rebuilt and avoid relocation to a group site. When existing physical or site constraints on a private home site prohibits the installation of an entry ramp that meets the technical provisions for ramp slope and ramp rise in 405.2 and 405.6, the proposed new exceptions to these provisions would permit a single ramp run with a slope not steeper than 1:10 and a 36 inches maximum rise. The proposed new exceptions would result in a space savings of approximately 38 to 60 square feet, depending on the landing configuration, or about one-third of the space needed for an entry ramp that meets the technical provisions for the slope and rise of ramp runs without the proposed new exceptions.

Many individuals with disabilities have difficulty using ramps with slopes steeper than 1:12 and may find a ramp with a 1:10 slope not usable. Because individuals with disabilities have varying needs and capabilities, the concurrence of individuals with disabilities who will use the entry ramp should be obtained before applying the proposed new exceptions.

604.5 Grab Bars (Water Closets)

607.4 Grab Bars (Bathtubs)

608.3 Grab Bars (Showers)

These sections currently require grab bars at toilet and bathing fixtures. Existing exceptions to these sections currently permit grab bars to be omitted at the time of construction in residential dwelling units where the walls are reinforced to support the installation of grab bars when needed by an occupant with a disability.

The proposed rule would amend the existing exception to 604.5 to read as follows:

Exception 2. In residential dwelling units, other than emergency transportable housing units required to provide mobility features complying with 809.2, grab bars shall not be required to be installed in toilet or bathrooms provided that reinforcement has been installed in walls and located so as to permit the installation of grab bars complying with 604.5.

The proposed rule would amend the existing exception to 607.4 to read as follows:

Exception 2. In residential dwelling units, other than emergency transportable housing units required to provide mobility features complying with 809.2, grab bars shall not be required to be installed in bathtubs located in bathing facilities provided that reinforcement has been installed in walls and located so as to permit the installation of grab bars complying with 607.4.

The proposed rule would amend the existing exception to 608.3 to read as follows:

Exception 2. In residential dwelling units, other than emergency transportable housing units required to provide mobility features complying with 809.2, grab bars shall not be required to be installed in showers located in bathing facilities provided that reinforcement has been installed in walls and located so as to permit the installation of grab bars complying with 608.3.

The existing exceptions to 604.5, 607.4, and 608.3 are intended to be used where residential dwelling units would be occupied by different persons over the life of the unit and some occupants may not need grab bars at toilet and bathing fixtures. The advisory committee recommended that these existing exceptions should not be used for emergency transportable housing units required to provide mobility features because they could result in delays in installing grab bars in the units. FEMA requires grab bars to be installed at toilet and bathing fixtures at the time of construction in emergency transportable housing units required to provide mobility features. The proposed rule would amend the existing exceptions to 604.5, 607.4, and 608.3 so they would not apply to emergency transportable housing units required to provide mobility features.

606.2 Clear Floor Space (Lavatories and Sinks)

This section currently requires clear floor space with knee and toe clearance to be provided at lavatories and sinks. An existing exception to this section currently permits readily removable base cabinets and finished floors and walls to be installed beneath lavatories and sinks so the cabinets can be removed and stored when an occupant with a disability needs clear floor space with knee and toe clearance at the lavatory and sink.

The proposed rule would amend the existing exception to 606.2 to read as follows:

Exception 3. In residential dwelling units, other than emergency transportable housing units required to provide mobility features complying with 809.2, cabinetry shall be permitted under lavatories and kitchen sinks provided that all of the following conditions are met:

(a) The cabinetry can be removed without removal or replacement of the fixture;

(b) The finish floor extends under the cabinetry; and

(c) The walls behind and surrounding the cabinetry are finished.

The existing exception to 606.2 is intended to be used where residential dwelling units would be occupied by different persons over the life of the unit and some occupants may not need clear floor space with knee and toe clearance at the lavatory and sink. The advisory committee recommended that this existing exception should not be used for emergency transportable housing units required to provide mobility features because the units do have space to store the removable base cabinets. FEMA requires clear floor space with knee and toe clearance to be provided at lavatories and sinks at the time of construction in emergency transportable housing units required to provide mobility features. The proposed rule would amend the existing exception to 606.2 so it would not apply to emergency transportable housing units required to provide mobility features.

606.4 Faucets and Water Spray Units

This section currently requires controls for faucets to comply with the technical provisions for operable parts in 309 and hand-operated metering faucets to remain open for at least 10 seconds.

The proposed rule would amend this section to read as follows:

606.4 Faucets and Water Spray Units. Controls for faucets and water spray units shall comply with 309. Hand-operated metering faucets shall remain open for 10 seconds minimum. A water spray unit shall be provided at the kitchen sink in emergency transportable housing units required to provide mobility features complying with 809.2.

The proposed rule would add a new provision for a water spray unit to be provided at the kitchen sink in emergency transportable housing units required to provide mobility features. The advisory committee recommended that a water spray unit be provided at the kitchen sink to facilitate dish washing by individuals with limited reach and dexterity because dishwashers typically are not provided in emergency transportable housing units.

608.4 Seats (Roll-In Type Showers)

This section currently requires folding or non-folding seats to be provided in transfer-type shower compartments, and in roll-in type showers in transient lodging guest rooms required to provide mobility features.

The proposed rule would amend this section to read as follows:

608.4 Seats. A folding or non-folding seat shall be provided in transfer type shower compartments. A folding seat shall be provided in roll-in type showers required in transient lodging guest rooms with mobility features complying with 806.2 and in roll-in type showers provided in emergency transportable housing units required to provide mobility features complying with 809.2. Seats shall comply with 610.

The proposed rule would add a new provision to 608.4 for a folding seat to be provided in roll-in type showers provided in emergency transportable housing units required to provide mobility features. The advisory committee recommended that a folding seat be provided in roll-in type showers provided in emergency transportable housing units required to provide mobility features since individuals with disabilities who use shower chairs for bathing may not have these mobility aids available in the aftermath of a disaster. Shower chairs are designed specifically for bathing and are not suitable for other uses. Many individuals with mobility disabilities could not use roll-in showers without a folding seat or shower chair. FEMA

currently provides a folding seat in roll-in type showers in emergency transportable housing units required to provide mobility features.

Question 4. Are there other building elements in addition to a water spray unit at the kitchen sink and a folding seat in a roll-in type showers that should be provided in emergency transportable housing units required to provide mobility features to facilitate independent living by individuals with disabilities who do not have the personal assistants or mobility aids that they typically depend on to perform activities of daily living in the aftermath of a disaster? Where possible, comments should include information regarding the cost of the recommended building elements.

The 2009 edition of the International Code Council American National Standard for Accessible and Usable Buildings and Facilities (ICC/ANSI A117.1) requires a folding seat in all roll-in type showers regardless of the occupancy type to facilitate use by a broader range of individuals with disabilities.

Question 5 . Should a folding seat be required in roll-in type showers regardless of the type of occupancy? Will a folding seat improve the usability of roll-in type showers? What costs are associated with requiring a folding seat in new and altered roll-in type showers?

804.3 Kitchen Work Surface

This section currently requires at least one 30 inch wide section of kitchen counter space to provide a work surface that is 34 inches high maximum and has a clear floor space with knee and toe clearance for a forward approach to the work surface.

The proposed rule would add a new exception to 804.3 to read as follows:

Exception: In emergency transportable housing units, a work surface complying with 804.3 shall not be required provided that the following criteria are met:

(a) A kitchen table complying with 902 is provided within the kitchen;

(b) All kitchen counter tops are 34 inches high maximum; and

(c) An electrical outlet is provided at a location within reach of the table.

Kitchens in emergency transportable housing units are usually small in size in order to maximize living space and have less storage space than other types of residential dwelling units. The advisory committee was concerned that a kitchen work surface complying with 804.3 reduces the amount of available storage space in the kitchen and recommended permitting a kitchen table complying with 902 to be provided instead of a kitchen work surface complying with 804.3. The committee also was concerned that occupants who use wheelchairs would not be able to use small kitchen appliances when they are positioned parallel to the kitchen counter tops. Kitchen counter tops are typically 36 inches high, which prevents a side reach over an obstruction. Therefore, the committee also recommended that all kitchen counter tops be 34 inches high maximum and that an electrical outlet be provided within reach of the kitchen table.

Question 6. Would allowing the kitchen work surface complying by 804.3 to be replaced by a table complying with 902, all kitchen counter tops at 34 inches high maximum, and an electrical outlet within reach of the table result in a kitchen that is usable by individuals with disabilities? Would the proposed new exception have any cost impacts? Would the proposed new exception necessitate the installation of specialized or modified cabinetry? Would installing the counter tops at 34 inches high maximum affect the amount of usable storage currently required by 804.5 to be within the reach ranges specified in 308? Is there any reason why an electrical outlet should not be provided near a kitchen table?

809 Residential Dwelling Units

The proposed rule would add new technical provisions to 809 for emergency transportable housing units with mobility features and emergency transportable housing units with communication features. When the final rule is published, the provisions in 809 would be renumbered to accommodate the new technical provisions for emergency transportable housing units, and the renumbered provisions would be referenced in other sections, as appropriate. The proposed rule also would reorganize the existing technical provisions for alarms in emergency transportable housing units with communication features. The table below shows the proposed renumbering of the provisions in 809 for the final rule and where the provisions are located in the current guidelines.

Proposed renumbering of provisions for the final rule	Current guidelines
809 Residential Dwelling Units	809 Residential Dwelling Units
809.1 General	809.1 General
809.2 Residential Dwelling Units with Mobility Features 809.2.1 Accessible Routes 809.2.1.1 Turning Space 809.2.1.2 Carpet 809.2.2 Kitchen 809.2.3 Toilet Facilities and Bathing Facilities 809.2.4 Bedrooms in Emergency Transportable Housing Units 809.2.4.1 Clear Floor Space 809.2.4.2 Overlap 809.2.4.3 Lighting Controls 809.2.5 Weather Alert Systems	809.2 Accessible Routes 809.2.1 Location 809.2.2 Turning Space 809.3 Kitchen 809.4 Toilet Facilities and Bathing Facilities
809.3 Residential Dwelling Units with Communication Features 809.3.1 Alarms 809.3.1.1 Building Fire Alarm System 809.3.1.2 Residential Dwelling Unit Smoke Alarms 809.3.1.3 Activation 809.3.2 Residential Dwelling Unit Primary Entrance 809.3.2.1 Notification 809.3.2.2 Identification	809.5 Residential Dwelling Units with Communication Features 809.5.1 Building Fire Alarm System 809.5.1.1 Alarm Appliances 809.5.1.2 Activation 809.5.2 Residential Dwelling Unit Smoke Alarms 809.5.2.1 Activation 809.5.3 Interconnection 809.5.4 Prohibited Use 809.5.5 Residential Dwelling Unit Primary Entrance

Proposed renumbering of provisions for the final rule	Current guidelines
809.3.3 Site, Building, or Floor Entrance 809.3.4 Weather Alert Systems	809.5.5.1 Notification 809.5.5.2 Identification 809.5.6 Site, Building, or Floor Entrance

809.2 Residential Dwelling Units With Mobility Features

As discussed below, the proposed rule would add new technical provisions to 809.2 for emergency transportable housing units with mobility features. The references to these provisions are as they would be renumbered when the final rule is published.

809.2.1.2 Carpet

The proposed rule would add a new provision at 809.2.1.2 to read as follows:

809.2.1.2 Carpet. Within emergency transportable housing units, carpet shall be prohibited on floor surfaces.

This proposed new provision would prohibit carpet in emergency transportable housing units with mobility features.

809.2.4 Bedrooms in Emergency Transportable Housing Units

The proposed rule would add new provisions at 809.2.4 to read as follows:

809.2.4 Bedrooms in Emergency Transportable Housing Units. Bedrooms in emergency transportable housing units shall comply with 809.2.4.

809.2.4.1 Clear Floor Space. A clear floor space complying with 305 shall be provided on one side of a bed. The clear floor space shall be positioned for parallel approach to the side of the bed and shall be on an accessible route.

809.2.4.2 Overlap. Where bedrooms are less than 70 square feet, the accessible route, maneuvering clearances required at doors, and turning space shall not overlap space occupied by furniture supplied with the unit.

809.2.4.3 Lighting Controls. A means to control at least one source of bedroom lighting from the bed shall be provided.

These proposed new provisions would apply to bedrooms in emergency transportable housing units with mobility features. They would require clear floor space positioned for a parallel approach to be located on one side of a bed and to be on an accessible route; would prohibit required accessible routes, maneuvering clearances, and turning spaces in bedrooms less than 70 square feet from overlapping space occupied by furniture supplied with the unit; and would require a means to control at least one source of lighting from the bed.

The advisory committee recommended these proposed new provisions to address space constraints in bedrooms in emergency transportable housing units. Emergency transportable housing units typically are furnished at the factory leaving little flexibility in furniture layout. Rearranging furniture supplied with the unit to increase accessibility often is impossible because of the small size of the unit. The committee did not recommend providing clear floor space on both sides of the bed because it would unnecessarily encroach on the limited space within the bedroom. If an individual with a disability cannot transfer on the side of the bed served by the clear floor space, the furniture can be rearranged.

Existing technical provisions in 809.2 and 404.2.4 currently require all rooms in residential dwelling units served by an accessible route to have a turning space (i.e., T–Turn or 60 inch diameter circle) and all doors on accessible routes to provide maneuvering clearances. Building codes generally require residential dwelling unit bedrooms to be at least 70 square feet. However, emergency transportable housing units rarely are subject to building codes and their bedrooms may be smaller. The proposed new provisions would prohibit required accessible routes, maneuvering clearances, and turning spaces in bedrooms less than 70 square feet from overlapping space occupied by furniture supplied with the unit. With careful design of room shape, door arrangement, and furniture layout, small bedrooms can meet the proposed new provisions.

Emergency transportable housing units typically are supplied with overhead lighting controlled by a wall switch near the bedroom door. These switches currently are required to comply with the technical provisions for operable parts in 309, including reach ranges, but they usually cannot be operated from the bed and bedside lamps are rarely supplied with the unit. Providing a means to control at least one source of lighting from the bed, such as bedside lamps, wall switches near the bed, or remote control devices that can be operated from the bed, allows individuals with disabilities to transfer in and out of bed safely.

809.2.5 Weather Alert Systems

The proposed rule would add a new provision at 809.2.5 to read as follows:

809.2.5 Weather Alert Systems. Where provided in emergency transportable housing units, weather alert systems shall comply with 309.1 through 309.3.

This proposed new provision would require weather alert systems provided in emergency transportable housing units with mobility features to comply with the technical provisions for clear floor space in 309.2 and for reach ranges in 309.3. The advisory committee did not recommend that weather alert systems comply with technical provisions for operation in 309.4 because some of the controls on currently available systems require tight grasping or pinching to operate. The proposed rule does not require weather alert systems to be provided. FEMA currently provides weather alert systems that comply with the proposed new provision in all its emergency transportable housing units.

809.3 Residential Dwelling Units With Communication Features

The references to the provisions for residential dwelling units with communication features are as they would be renumbered when the final rule is published.

809.3.1 Alarms

The proposed rule would reorganize the existing technical provisions for alarms in residential dwelling units with communication features at 809.3.1 and add a new provision on power sources in 809.3.1.2 to read as follows:

809.3.1 Alarms. Alarms shall comply and 809.3.1. The same visible alarm appliances shall be permitted to provide notification of building fire alarm and residential dwelling unit smoke alarm activation. Visible alarm appliances used to indicate building fire alarm or residential dwelling unit smoke alarm activation shall not be used for any other purpose within the residential dwelling unit.

809.3.1.1 Building Fire Alarm System. Where a building fire alarm system is provided, the system wiring shall be extended to a point within the residential dwelling unit in the vicinity of the residential dwelling unit smoke alarm system. Alarm appliances

provided within a residential dwelling unit as part of the building fire alarm system shall comply with NFPA 72 (1999 or 2002 edition) (incorporated by reference, see ''Referenced Standards'' in Chapter 1).

809.3.1.2 Residential Dwelling Unit Smoke Alarms. Residential dwelling unit smoke alarms shall provide audible alarm appliances with integral visible alarms complying with NFPA 72 (1999 or 2002 edition) (incorporated by reference, see ''Referenced Standards'' in Chapter 1). Smoke alarms with an integral visible notification appliance shall be supplied with power from one or more power sources as follows:

(a) A commercial light and power source along with a secondary power source; or

(b) A non-commercial alternating current (ac) power source along with a secondary power source.

809.3.1.3 Activation. All alarms within the residential dwelling unit providing visible notification of a building fire alarm shall be activated upon activation of the building fire alarm in the portion of the building containing the residential dwelling unit. All visible smoke alarms within the residential dwelling unit shall be activated upon smoke detection.

The proposed new provision in 809.3.1.2 would require smoke alarms with built-in visible alarms to provide either a commercial light and power source along with a secondary power source, or a non-commercial alternating current power source along with a secondary power source. Commercial light and power is generated and distributed from a central station and is the type of power provided by public utilities in most communities in the United States. Most home generators provide a non-commercial light and power source. A secondary power source can be a battery installed in the unit. The proposed provision is consistent with requirements in the National Fire Protection Association (NFPA) 72 National Fire Alarm Code, which is referenced in 809.3.1.2. The proposed new provision would apply to all types of residential dwelling units required to provide communication features, including emergency transportable housing units.

809.3.4 Weather Alert Systems

The proposed rule would add a new provision at 809.3.4 to read as follows:

809.3.4 Weather Alert Systems. Where provided in emergency transportable housing units, weather alert systems shall provide audible and visual output.

The proposed new provision would require weather alert systems provided in emergency transportable housing units with communication features to provide both audible and visible output. The proposed rule does not require weather alert systems to be provided. FEMA currently provides weather alert systems that comply with the proposed new provision in all its emergency transportable housing units.

7. Regulatory Analyses

Executive Order 13563 (Improving Regulation and Regulatory Review) and Executive Order

12866 (Regulatory Planning and Review): Preliminary Regulatory Assessment

The Office of Management and Budget has reviewed this proposed rule in accordance with Executive Orders 13563 and 12866. Among other things, Executive Order 13563 directs agencies to propose or adopt a regulation only upon a reasoned determination that its benefits justify its costs; tailor the regulation to impose the least burden on society, consistent with obtaining the regulatory objectives; and, in choosing among alternative regulatory approaches, select those approaches that maximize net benefits. Executive Order 13563 recognizes that some benefits and costs are difficult to quantify and provides that, where appropriate and permitted by law, agencies may consider and discuss qualitatively values that are difficult or impossible to quantify, including equity, human dignity, fairness, and distributive impacts.

The Access Board has prepared a preliminary regulatory assessment for the proposed rule. The preliminary regulatory assessment is available on the Access Board's web site at: *http://www.access-board.gov/eth/index.htm*. The benefits and costs of the proposed rule are discussed below.

Benefits

The U.S. Census Bureau estimates that for the civilian noninstitutionalized population aged 5 and older living in the United States:

- 27.4 million people (11.9 percent) have difficulty with ambulatory activities of the lower body and 19.0 million people (8.2 percent) have difficulty with upper body physical tasks;
- 8.5 million people (3.7 percent) have difficulty performing one or more activities of daily living such as getting around inside the home, getting into or out of bed, taking a bath or shower, getting to or using the toilet, dressing, and eating;
- 3.3 million (1.4 percent) used a wheelchair or other wheeled mobility device and 10.2 million (4.4 percent) used a cane, crutches, or walker to assist with mobility; and
- 7.8 million people (3.4 percent) have difficulty hearing.[14]

The proposed rule seeks to ensure that newly constructed and altered emergency transportable housing units are readily accessible to and usable by this population. The Executive Summary includes a summary of the major proposed provisions that discusses the justification for and benefits of the proposed provisions for this population. These benefits are difficult or impossible to quantify.

Costs

FEMA's planning estimate is to maintain an inventory of 2,500 emergency transportable housing units ready to deploy in response to disasters. As of March 2012, FEMA had approximately 2,065 units in its inventory. FEMA's current policy is to have 20 percent of the units in its inventory comply with UFAS. FEMA periodically purchases new units to replenish its inventory.

When FEMA purchases new units, the units are constructed to FEMA's requirements. Costs are attributed to the proposed provisions if it would result in FEMA requiring newly constructed units to provide a feature that it would not otherwise require and manufacturers would incur additional costs to construct the feature that would increase the cost of the units. FEMA reviewed the proposed rule and consulted with five manufacturers to determine whether any costs would be attributed to the proposed provisions. FEMA determined that no additional costs would be attributed to the proposed provisions for emergency transportable housing units required to provide communication features since it currently requires smoke alarms with built-in visible alarms and weather alert systems with both audible and visible output in all newly constructed units.

For emergency transportable housing units required to provide mobility features, FEMA determined that costs would be attributed to the proposed provisions for kitchen counter top electrical outlets, a single water shut-off valve, a kitchen sink water spray unit, and a bedroom lighting control. FEMA's

[14] U.S. Census Bureau, Americans with Disabilities: 2005 (Issued December 2008) available on the web at: *http://www.census.gov/prod/2008pubs/p70–117.pdf.*

unit cost estimates for these proposed provisions are shown in the table below. No costs would be attributed to the proposed provision for folding seats in roll-in type showers since FEMA currently requires folding seats to be provided in roll-in type showers.

Proposed provisions	FEMA Unit cost estimates
Kitchen Counter Top Electrical Outlets Exception 3 to 205.1 and F205.1	$150–$500
Single Water Shut-Off Valve Exception 11 to 205.1 and F205.1	200–500
Kitchen Sink Water Spray Unit 606.4	75
Bedroom Lighting Control 809.2.4.3	60
Total	485–1,135

FEMA provided low and high unit cost estimates for the kitchen counter top electrical outlets. The high unit cost estimate assumes additional costs for custom made base cabinets that may be needed for electrical outlets installed in the face of the cabinets. FEMA also provided low and high unit cost estimates for the single water shut-off valve. The high unit cost estimate assumes that the units would have a sprinkler system and would need some redesign of the plumbing system. FEMA currently does not require the units to provide a sprinkler system and the high unit cost estimate for the single water shut-off valve would apply if FEMA would require the units to provide sprinkler systems in the future.

Question 7. Are these cost estimates reasonable? Should compliance costs be attributed to any of the other proposed provisions and, if so, what additional costs would be incurred due to the proposed provisions?

The number of emergency transportable housing units that FEMA deploys varies by disaster and from year to year. The number of units deployed during the four year period from 2008 to 2011 is shown in the table below. FEMA sometimes provides UFAS units to applicants who do not have a disability due to lack of inventory of other units.

EMERGENCY TRANSPORTABLE HOUSING UNITS DEPLOYED BY FEMA

Year	Number of disasters	Total units deployed	UFAS units	Other units	Percentage UFAS units (percent)
2008	5	3,798	369	3,429	10
2009	5	1,353	201	1,152	15
2010	3	51	3	48	6
2011	14	4,036	420	3,616	10
Total	27	9,238	993	8,245	11
4-Year Average	7	2,310	248	2,061	11

The total additional costs that FEMA would incur assuming HUD updates its accessibility standards for residential facilities to be consistent with the ADA and ABA Accessibility Guidelines, as amended by the proposed rule, are estimated under three scenarios.

Scenario 1: 4–Year Average Deployment From 2008 to 2011

Under this scenario, the total additional costs that FEMA would incur on an annual basis are based on the average number of emergency transportable housing units deployed by FEMA from 2008 to 2011. During this period, FEMA deployed an average of 248 UFAS units per year. The scenario assumes that FEMA would purchase the same number of new units with mobility features annually to replenish the inventory. FEMA's total additional annual costs under Scenario 1 are shown in the table below.

SCENARIO 1—ADDITIONAL ANNUAL COSTS BASED ON 4-YEAR AVERAGE DEPLOYMENT FROM 2008 TO 2011

Number of new units purchased annually with mobility features	Low estimate ($485 per unit)	High estimate ($1,135 per unit)
248	$120,280	$281,480

Scenario 2: 20 Percent of Units in Inventory Provide Mobility Features

Under this scenario, the total additional costs that FEMA would incur on an annual basis are based on its planning estimate to maintain an inventory of 2,500 emergency transportable housing units and its current policy to have 20 percent of the units in the inventory comply with UFAS. The scenario assumes that FEMA deploys the entire inventory each year and would purchase 500 new units with mobility features annually to replenish the inventory. FEMA's total additional annual costs under Scenario 2 are shown in the table below.

SCENARIO 2—ADDITIONAL ANNUAL COSTS BASED ON 20 PERCENT OF UNITS IN INVENTORY PROVIDE MOBILITY FEATURES

Number of new units purchased annually with mobility features	Low estimate ($485 per unit)	High estimate ($1,135 per unit)
500	$242,500	$567,500

Scenario 3: Disasters Equivalent to Hurricanes Katrina and Rita

Under this scenario, the total additional costs that FEMA would incur are based on disasters equivalent to Hurricanes Katrina and Rita. During Hurricanes Katrina and Rita, FEMA deployed 145,000 emergency transportable housing units. The scenario assumes three different levels of assessed need for units with mobility features: 14,500 (10 percent), 21,700 (15 percent), and 29,000 (20 percent). FEMA's total additional costs under Scenario 3 are shown in the table below. The costs may be incurred over more than one year depending on whether the disasters occur in the early part or late part of the year, and the manufacturing capacity and production time needed to construct large numbers of units.

SCENARIO 3—ADDITIONAL COSTS BASED ON DISASTERS EQUIVALENT TO HURRICANES KATRINA AND RITA

Number of new units purchased with mobility features	Low estimate ($485 per unit)	High estimate ($1,135 per unit)
14,500	$7,032,500	$16,457,500
21,700	10,548,750	24,686,250
29,000	14,065,000	32,915,000

The Access Board has made a preliminary determination based on the preliminary regulatory assessment that the benefits of the proposed amendments would justify the costs; that the proposed amendments would impose the least burden on society, consistent with obtaining the regulatory objectives; and that the regulatory approach selected would maximize net benefits.

Regulatory Flexibility Act: Certification of No Significant Impact on a Substantial Number of Small Entities

Pursuant to Section 605 (b) of the Regulatory Flexibility Act (5 U.S.C. 605 (b)), the Access Board certifies that the proposed amendments will not have a significant economic impact on a substantial number of small entities. The Robert T. Stafford Disaster Relief and Emergency Assistance Act authorizes FEMA to provide temporary housing assistance to individuals and households in response to a major disaster or emergency declared by the President. See 42 U.S.C. 5174 and 5192. FEMA provides emergency transportable housing units where there is a need for temporary housing and a lack of available housing resources in the affected area. A review of the Web sites of state agencies and nongovernmental organizations that provide services in response to disasters did not show that these entities currently provide emergency transportable housing units. There is no information available indicating that local or tribal governments, including small jurisdictions with a population less than 50,000, provide emergency transportable housing units for people who need temporary housing in the aftermath of a disaster.

Question 8. Do any small jurisdictions with a population less than 50,000 or small nongovernmental organizations provide emergency transportable housing units for people who need temporary housing in the aftermath of a disaster?

Executive Order 13132 (Federalism)

The proposed rule adheres to the fundamental federalism principles and policy making criteria in Executive Order 13132. The proposed rule would amend the ADA and ABA Accessibility Guidelines to specifically address emergency transportable housing units that are provided by the Federal Emergency Management Agency or other entities on a temporary site in response to an emergency need for temporary housing. Other federal agencies are required to issue enforceable accessibility standards for the construction and alteration of facilities covered by the ADA or ABA that are consistent with the ADA and ABA Accessibility Guidelines. The ADA was enacted by Congress pursuant to its authority to enforce the Fourteenth Amendment to the U.S. Constitution and to regulate commerce. The ADA was enacted to provide a clear and comprehensive national mandate for the elimination of discrimination against individuals with disabilities. See 42 U.S.C. 12101 (b) (1). The ADA recognizes the authority of State and local governments to enact and enforce laws that provide for greater or equal protection for the rights of individuals with disabilities than are afforded by this chapter. See 42 U.S.C. 12201 (b).

Unfunded Mandates Reform Act

The Unfunded Mandates Reform Act does not apply to proposed or final rules that enforce constitutional rights of individuals or enforce statutory rights that prohibit discrimination on the basis of race, color, sex, national origin, age, handicap, or disability. The proposed rule would amend the ADA and ADA Accessibility Guidelines to specifically address emergency transportable housing units that are provided by the Federal Emergency Management Agency or other entities on a temporary site in response to an emergency need for temporary housing. Other federal agencies are required to issue enforceable accessibility standards for the construction and alteration of facilities covered by the ADA or ABA that are consistent with the ADA and ABA Accessibility Guidelines. Since the ADA prohibits discrimination on the basis of disability, an assessment of the rule's effect on State, local, and tribal governments, and the private sector is not required by the Unfunded Mandates Reform Act.

List of Subjects in 36 CFR Part 1191

Buildings and facilities, Civil rights, Incorporation by reference, Individuals with disabilities, Transportation.

Susan Brita,

Chair.

[FR Doc. 2012–14811 Filed 6–15–12; 8:45 am]

BILLING CODE 8150–01–P

ENVIRONMENTAL PROTECTION AGENCY

40 CFR Part 65

[EPA–HQ–OAR–2010–0868; EPA–HQ–OAR–2010–0869; EPA–HQ–OAR–2010–0870; EPA–HQ–OAR–2010–0871; FRL–9688–8]

RIN 2060–AR00

National Uniform Emission Standards for Storage Vessel and Transfer Operations, Equipment Leaks, and Closed Vent Systems and Control Devices; and Revisions to the National Uniform Emission Standards General Provisions

AGENCY: Environmental Protection Agency (EPA).

ACTION: Extension of public comment period.

SUMMARY: On March 26, 2012, the EPA proposed the National Uniform Emission Standards for Storage Vessels and Transfer Operations, Equipment Leaks, and Closed Vent Systems and Control Devices, herein referred to as Uniform Standards. The EPA is extending the deadline for written comments on the proposed amendments by 90 days to September 24, 2012. The EPA received requests for this extension from the American Petroleum Institute (API) and the American Chemistry Council (ACC). API and ACC each requested an extension in order to fully evaluate the potential impact of the Uniform Standards on subparts applicable to the refining and chemical industries, respectively. The EPA finds these requests to be reasonable due to the multiple source categories potentially affected by this action.

DATES: Comments must be received on or before September 24, 2012.

ADDRESSES: Technical comments pertinent to the Uniform Standards should be identified as follows:

- Uniform Standards for Storage Vessels and Transfer Operations should be marked, ''Attention Docket ID No. EPA–HQ–OAR–2010–0871.''
- Uniform Standards for Equipment Leaks should be marked, ''Attention Docket ID No. EPA–HQ–OAR–2010–0869.''
- Uniform Standards for Control Devices should be marked, ''Attention Docket ID No. EPA–HQ–OAR–2010–0868.''
- Uniform Standards General Provisions or General Comments on the Uniform Standards should be marked, ''Attention Docket ID No. EPA–HQ–OAR–2010–0870.''

Submit your comments, identified by the appropriate Docket ID No., by one of the following methods:

- *www.regulations.gov:* Follow the on-line instructions for submitting comments.
- *Email: a-and-r-docket@epa.gov,* Attention Docket ID No. EPA–HQ–OAR–2010–0868; EPA–HQ–OAR–2010–0869; EPA–HQ–OAR–2010–0870; or EPA–HQ–OAR–2010–0871 (as appropriate).
- *Fax:* (202) 566–9744, Attention Docket ID No. EPA–HQ–OAR–2010–0868; EPA–HQ–OAR–2010–0869; EPA–HQ–OAR–2010–0870; or EPA–HQ–OAR–2010–0871 (as appropriate).
- *Mail:* U.S. Postal Service, send comments to: EPA Docket Center, EPA West (Air Docket), Attention Docket ID No. EPA–HQ–OAR–2010–0868; EPA–HQ–OAR–2010–0869; EPA–HQ–OAR–2010–0870; or EPA–HQ–OAR–2010–0871 (as appropriate), U.S. Environmental Protection Agency, Mailcode: 2822T, 1200 Pennsylvania Ave. NW., Washington, DC 20460. Please include a total of two copies. In addition, please mail a copy of your comments on the information collection provisions to the Office of Information and Regulatory Affairs, Office of Management and Budget (OMB), Attn: Desk Officer for EPA, 725 17th Street NW., Washington, DC 20503.
- *Hand Delivery:* U.S. Environmental Protection Agency, EPA West (Air Docket), Room 3334, 1301 Constitution Ave. NW., Washington, DC 20004. Attention Docket ID No. EPA–HQ–OAR–2010–0868; EPA–HQ–OAR–2010–0869; EPA–HQ–OAR–2010–0870; or EPA–HQ–OAR–2010–0871 (as appropriate). Such deliveries are only accepted during the Docket's normal hours of operation, and special arrangements should be made for deliveries of boxed information.

Instructions. Direct your comments to Docket ID No. EPA–HQ–OAR–2010–0868; EPA–HQ–OAR–2010–0869; EPA–HQ–OAR–2010–0870; or EPA–HQ–OAR–2010–0871 (as appropriate). The EPA's policy is that all comments received will be included in the public docket without change and may be made available online at *www.regulations.gov,* including any personal information provided, unless the comment includes information claimed to be confidential business information (CBI) or other information whose disclosure is restricted by statute. Do not submit information that you consider to be CBI or otherwise protected through *www.regulations.gov* or email. The *www.regulations.gov* Web site is an ''anonymous access'' system, which means the EPA will not know your identity or contact information unless you provide it in the body of your comment. If you send an email comment directly to the EPA without going through *www.regulations.gov,* your email address will be automatically captured and included as part of the comment that is placed in the public docket and made available on the Internet. If you submit an electronic comment, the EPA recommends that you include your name and other contact information in the body of your comment and with any disk or CD–ROM you submit. If the EPA cannot read your comment due to technical difficulties and cannot contact you for clarification, the EPA may not be able to consider your comment. Electronic files should avoid the use of special characters, any form of encryption, and be free of any defects or viruses. For additional information about the EPA's public docket, visit the EPA Docket Center homepage at *http://www.epa.gov/epahome/dockets.htm.*

Docket. The EPA has established dockets for this rulemaking under Docket ID No. EPA–HQ–OAR–2010–0868, EPA–HQ–OAR–2010–0869, EPA–HQ–OAR–2010–0870, and EPA–HQ–OAR–2010–0871. All documents in the docket are listed in the *www.regulations.gov* index. Although listed in the index, some information is not publicly available, *e.g.,* CBI or other information whose disclosure is restricted by statute. Certain other material, such as copyrighted material, is not placed on the Internet and will be publicly available only in hard copy. Publicly available docket materials are available either electronically in *www.regulations.gov* or in hard copy at the EPA Docket Center, EPA West, Room 3334, 1301 Constitution Ave. NW., Washington, DC. The Public Reading Room is open from 8:30 a.m. to 4:30 p.m., Monday through Friday, excluding legal holidays. The telephone number for the Public Reading Room is (202) 566–1744, and the telephone number for the EPA Docket Center is (202) 566–1742.

FOR FURTHER INFORMATION CONTACT: For information regarding the proposed General Provisions to the National Uniform Emission Standards, contact Ms. Brenda Shine, (919) 541–3608, Sector Policies and Programs Division (E143–01), Office of Air Quality Planning and Standards, U.S. Environmental Protection Agency, Research Triangle Park, North Carolina 27711; telephone number: (919) 541–3608; fax number (919) 541–0246; email address: *shine.brenda@epa.gov.*

For information regarding the proposed National Uniform Emission Standards for Equipment Leaks, contact either: Ms. Jodi Howard, Sector Policies

and Programs Division (E143–01), Office of Air Quality Planning and Standards, U.S. Environmental Protection Agency, Research Triangle Park, North Carolina 27711; telephone number: (919) 541–4607; fax number (919) 541–0246; email address: *howard.jodi@epa.gov;* or Ms. Andrea Siefers, Sector Policies and Programs Division (E143–01), Office of Air Quality Planning and Standards, U.S. Environmental Protection Agency, Research Triangle Park, North Carolina 27711; telephone number: (919) 541–1185; fax number (919) 541–0246; email address: *siefers.andrea@epa.gov.*

For information regarding the proposed National Uniform Emission Standards for Storage Vessel and Transfer Operations, contact Mr. Nick Parsons, Sector Policies and Programs Division (E143–01), Office of Air Quality Planning and Standards, U.S. Environmental Protection Agency, Research Triangle Park, North Carolina 27711; telephone number: (919) 541–5372; fax number (919) 541–0246; email address: *parsons.nick@epa.gov.*

For information regarding the proposed National Uniform Emission Standards For Control Devices, contact Mr. Andrew Bouchard, Sector Policies and Programs Division (E143–01), Office of Air Quality Planning and Standards, U.S. Environmental Protection Agency, Research Triangle Park, North Carolina 27711; telephone number: (919) 541–4036; fax number (919) 541–0246; email address: *bouchard.andrew@epa.gov.*

SUPPLEMENTARY INFORMATION: For the reasons noted above, the public comment period will now end on September 24, 2012.

How can I get copies of the proposed rule and other related information?

The proposed rule titled, National Uniform Emission Standards for Storage Vessel and Transfer Operations, Equipment Leaks, and Closed Vent Systems and Control Devices; and Revisions to the National Uniform Emission Standards General Provisions, was published on March 26, 2012 (77 FR 17898). The EPA has established public dockets for the proposed rulemaking under Docket ID No. EPA–HQ–OAR–2010–0868, EPA–HQ–OAR–2010–0869, EPA–HQ–OAR–2010–0870, and EPA–HQ–OAR–2010–0871, and a copy of the proposed rule is available in the docket. Information on how to access the docket is presented above in the **ADDRESSES** section.

Dated: June 11, 2012.

Gina McCarthy,

Assistant Administrator.

[FR Doc. 2012–14784 Filed 6–15–12; 8:45 am]

BILLING CODE 6560–50–P

Notices

Federal Register

Vol. 77, No. 117

Monday, June 18, 2012

This section of the FEDERAL REGISTER contains documents other than rules or proposed rules that are applicable to the public. Notices of hearings and investigations, committee meetings, agency decisions and rulings, delegations of authority, filing of petitions and applications and agency statements of organization and functions are examples of documents appearing in this section.

DEPARTMENT OF AGRICULTURE

Farm Service Agency

Information Collection Request; Request for Aerial Photography

AGENCY: Farm Service Agency, USDA.

ACTION: Notice; request for comments.

SUMMARY: In accordance with the Paperwork Reduction Act of 1995, the Farm Service Agency (FSA) is seeking comments from all interested individuals and organizations on an extension of a currently approved information collection associated with FSA Aerial Photography Program. The FSA Aerial Photography Field Office (APFO) uses the information from this form to collect the customer and photography information needed to produce and ship the various photographic products ordered.

DATES: We will consider comments that we receive by August 17, 2012.

ADDRESSES: We invite you to submit comments on this notice. In your comments, include the date, volume, and page number of this issue of the Federal Register, the OMB control number and the title of the information collection. You may submit comments by any of the following methods:

- *Federal eRulemaking Portal:* Go to *http://www.regulations.gov.* Follow the online instructions for submitting comments.
- *Mail:* David Parry, USDA, Farm Service Agency, APFO Customer Service Section, 2222 West 2300 South Salt Lake City, Utah 84119–2020.
- *Email: david.parry@slc.usda.gov.*

You may also send comments to the Desk Officer for Agriculture, Office of Information and Regulatory Affairs, Office of Management and Budget, Washington, DC 20503. Copies of the information collection may be requested by contacting David Parry at the above address.

FOR FURTHER INFORMATION CONTACT: David Parry, Supervisor, (801) 844–2923. Persons with disabilities who require alternative mean for communication (Braille, large print, audio tape, etc.) should contact the USDA's TARGET Center at (202) 720–2600 (Voice and TDD).

SUPPLEMENTARY INFORMATION:

Title: Request for Aerial Photography.

OMB Control Number: 0560–0176.

Expiration Date: December 31, 2012.

Type of Request: Extension of a Currently Approved Information Collection.

Abstract: The information collection is needed to enable the Department of Agriculture to effectively administrate the Aerial Photography Program. APFO has the responsibility for conducting and coordinating the FSA's aerial photography, remote sensing programs, and the aerial photography flying contract programs. The digital and film imagery secured by FSA is public domain and reproductions are available at cost to any customer with a need. All receipts from the sale of aerial photography products and services are retained by FSA. The FSA–441, Request for Aerial Photography, is the form FSA supplies to the customers for placing an order for aerial imagery products and services.

Estimate of Burden: Public reporting burden for this information collection is estimated to average 19 minutes hours per response. The average travel time, which is included in the total burden, is estimated to be 1 hour per respondent.

Respondents: Farmers, Ranchers and other USDA customers who wish to purchase imagery products and services.

Estimated Number of Respondents: 12,120.

Estimated Annual Number of Responses per Respondent: 1.

Estimated Annual Responses on Respondents: 12,120.

Estimated Total Annual Burden Hours: 3770 hours.

We are requesting comments on all aspects of this information collection to help us to:

(1) Determine whether the continued collection of information is still necessary for the proper performance of the functions of the FSA, including whether the information will have practical utility;

(2) Assess the accuracy of the FSA's estimate of burden including the validity of the methodology and assumptions used;

(3) Enhance the quality, utility and clarity of the information to be collected;

(4) Minimize the burden of the collection of information on those who are to respond, including through the use of appropriate automated, electronic, mechanical, or other technological collection techniques or other forms of information technology.

All comments received in response to this notice, including names and addresses when provided, will be a matter of public record. Comments will be summarized and included in the submission for the Office of Management and Budget approval.

Signed on June 5, 2012.

Bruce Nelson,

Administrator, Farm Service Agency.

[FR Doc. 2012–14738 Filed 6–15–12; 8:45 am]

BILLING CODE 3410–05–P

DEPARTMENT OF AGRICULTURE

Forest Service

Recreation Resource Advisory Committees

AGENCY: Forest Service, USDA.

ACTION: Call for nominations for the Pacific Northwest Recreation Resource Advisory Committee.

SUMMARY: The Secretary of Agriculture has established the Pacific Northwest Recreation Resource Advisory Committee (Recreation RACs) pursuant to Section 4 of the Federal Lands Recreation Enhancement Act (REA) that was passed into law as part of the 2005 Consolidated Appropriations Act (Pub. L. 108–447) on December 8, 2004. The purpose of this Recreation RAC is to provide recommendations regarding recreation fees to both the Forest Service and the Bureau of Land Management (BLM) as appropriate. There are currently eleven vacancies on the Recreation RAC: Winter Motorized, Winter Non-motorized Recreation, Summer Motorized Recreation, Summer Non-motorized, Hunting and Fishing, Motorized Outfitter and Guide Recreation, Non-motorized Outfitter and Guide Recreation, Local Environmental, State Tourism, Local Government, and Tribal. The public is invited to submit

nominations for membership on the Recreation RAC.

DATES: All nominations should be received by the appropriate Regional Office by July 13, 2012. If necessary, managers may continue accepting applications beyond this date to ensure broad and balanced representation on the Recreation RAC. Nominations must contain a completed application packet that includes background information and other information that addresses a nominee's qualifications. Application packets for Recreation RACs can be obtained from the Forest Service Regional Office listed below or on the Web at *http://www.fs.fed.us/passespermits/rrac-application.shtml.*

ADDRESSES: Regional Contact for Recreation RAC:

Pacific Northwest Regional Office: Shandra Terry, Regional Public Involvement Coordinator, Public Affairs, 333 SW 1st Ave., Portland, OR 97208, (503) 808–2242.

FOR FURTHER INFORMATION CONTACT: Julie Cox, National Recreation RAC Coordinator, 333 SW 1st Avenue, Portland, OR 97208, (503) 808–2984.

SUPPLEMENTARY INFORMATION:

Nomination and Application Information for Recreation RACs

Each Forest Service Recreation RAC shall consist of 11 members appointed by the Secretary of Agriculture. These members shall provide a broad and balanced representation from the recreation community as follows:

1. Five persons who represent recreation users and that include, as appropriate, the following:
   a. Winter motorized recreation, such as snowmobiling;
   b. Winter non-motorized recreation, such as snowshoeing, cross-country and downhill skiing, and snowboarding;
   c. Summer motorized recreation, such as motorcycles, boaters, and off-highway vehicles;
   d. Summer non-motorized recreation, such as backpacking, horseback riding, mountain biking, canoeing, and rafting; and
   e. Hunting and fishing.
2. Three persons who represent interest groups that include, as appropriate, the following:
   a. Motorized outfitters and guides;
   b. Non-motorized outfitters and guides; and
   c. Local environmental groups.
3. Three persons, as follows:
   a. A State tourism official to represent the State;
   b. A person who represents affected Indian tribes; and
   c. A person who represents affected local government interests.

Any individual or organization may nominate one or more qualified persons to represent the interests listed above to serve on the Recreation RAC. To be considered for membership, nominees must—

1. Identify what interest group they would represent and how they are qualified to represent that group;
2. State why they want to serve on the committee and what they can contribute;
3. Show their past experience in working successfully as part of a collaborative group, and
4. Complete Form AD–755, Advisory Committee or Research and Promotion Background Information.

Letters of recommendation are welcome. Individuals may also nominate themselves. Nominees do not need to live in a State within a particular Recreation RAC area of jurisdiction nor live in a State in which Forest Service-managed lands are located.

Application packets, including evaluation criteria and the AD–755 form, are available at *www.fs.fed.us/passespermits/rrac* or by contacting the respective regions identified in this notice. Nominees must submit all documents to the appropriate regional contact. Additional information about recreation fees and REA is available at *www.fs.fed.us/passespermits/about-rec-fees.shtml.*

The Agency will also work with Governors and county officials to identify potential nominees.

The Agency will review the applications and prepare a list of qualified applicants from which the Secretary of Agriculture shall appoint both committee members and alternates. An alternate will become a participating member of the Recreation RAC only if the member for whom the alternate is appointed to replace leaves the committee permanently.

Recreation RAC members serve without pay but are reimbursed for travel and per diem expenses for regularly scheduled committee meetings. All Recreation RAC meetings are open to the public and an open public forum is part of each meeting. Meeting dates and times will be determined by Agency officials in consultation with the Recreation RAC members, when the committee is formed.

Dated: June 6, 2012.

Lisa Freedman,

Chief of Staff for the Regional Forester, Pacific Northwest Region, Forest Service.

[FR Doc. 2012–14793 Filed 6–15–12; 8:45 am]

BILLING CODE 3410–11–P

DEPARTMENT OF AGRICULTURE

Forest Service

Intermountain Region, Boise National Forest; Emmett Ranger District, Idaho; Scriver Creek Integrated Restoration Project

AGENCY: Forest Service, USDA.

ACTION: Notice of Intent to prepare a supplemental environmental impact statement

SUMMARY: The Forest Service will prepare a Supplemental Draft Environmental Impact Statement (SDEIS) to disclose the environmental consequences of implementing alternatives considered for the Scriver Creek Integrated Restoration Project. Following the public review period for the SDEIS, the Forest Service will issue the Final EIS and Record of Decision (ROD) which will identify the alternative selected by the Responsible Official for implementation.

The need for a SDEIS is to allow the Forest Service to clearly identify all permits, licenses and other entitlements which may be needed to implement the proposed activities that were not otherwise identified in the DEIS released December 30, 2011 (FR Vol. 76, No. 251; NOA for EIS No. 20110438). Specifically, an SDEIS is needed to identify that a National Pollutant Discharge Elimination System (NPDES) permit may be required and comments on the SDEIS will be requested from the appropriate regulatory agencies and public to help assess whether such a permit is required.

There have also been modifications made to the proposed action identified in the DEIS released December 30, 2011 concerning road systems, logging systems and watershed restoration opportunities as a result of updated field information. Additional alternatives may also be developed in response to comments received on the DEIS. Thus, the Responsible Official has determined that the purpose of the act [NEPA] would be furthered by issuing a SDEIS for additional review and comment prior to completion of the Final EIS.

DATES: Project scoping occurred in May 2010. No additional scoping efforts will occur as part of the SDEIS preparation process. The SDEIS is expected to be published on or about August 3, 2012. A 45-day comment period will begin the day following publication of the notice of availability (NOA) of the SDEIS in the **Federal Register**. The publication date in the **Federal Register** is the only means for calculating the comment

period for the SDEIS. Based on an anticipated NOA publication date of August 3, 2012, comments on the SDEIS must be received on or before September 18, 2012. The Final EIS and ROD are anticipated to be released within 30 days following the close of the SDEIS comment period.

ADDRESSES: To request copies of the SDEIS or Final EIS and/or send written comments please write to Randall Hayman, Forest Planner, Boise National Forest; 1249 South Vinnell Way, Suite 200; Boise, Idaho 83709; or by fax at 208–373–4111; or you may hand-deliver your comments or requests to the Boise Forest Supervisor's Office, located at 1249 South Vinnell Way, Suite 200, Boise, during normal business hours from 7:30 a.m. to 4:30 p.m., Monday through Friday, excluding Federal holidays. Electronic requests or comments must be submitted in a format such as an email message, plain text (.txt), rich text format (AO, or Word (.doc) to: *comments-intermtn-boise@fs.fed.us.*

Comments or requests received in response to this publication, including names and addresses of those who respond, will be part of the public record for this proposed action.

FOR FURTHER INFORMATION CONTACT: Randall Hayman, Forest Planner, Boise National Forest at the address above.

Individuals who use telecommunication devices for the deaf (TDD) may call the Federal Information Relay Service (FIRS) at 1–800–877–8339 between 8 a.m. and 8 p.m., Eastern Time, Monday through Friday.

SUPPLEMENTARY INFORMATION: The project area covers approximately 11,500 acres in the Scriver Creek subwatershed. The Scriver Creek subwatershed is a tributary to the Middle Fork Payette River drainage, approximately 6 miles north of Crouch, Idaho. The project area is located entirely on National Forest System (NFS) lands in Sections 3–10, 15–18, and 20, T. 10 N., R. 4 E.; Sections 21–23, and 26–34, T. 11 N., R. 4 E., Boise Meridian, Boise and Valley Counties, Idaho.

Purpose and Need for Action: Three purposes have been identified for the project: (1) Manage forest structure, density and species composition to accelerate development of large tree and old forest habitat dominated by early seral tree species (e.g. Ponderosa pine) that will contribute to or achieve desired vegetation and associated wildlife habitat conditions within the project area; (2) Improve watershed conditions by reducing road-related impacts to wildlife, fish, soil, and water resources while providing for the transportation system necessary to meet long term management needs. (Scriver Creek Subwatershed Travel Analysis Process (TAP) Report (USDA Forest Service 2011b)); and (3) Utilize wood products resulting from restoration treatments to support local and regional economies.

Proposed Action: Vegetation restoration utilizing commercial timber harvest activities would be conducted on about 3,265 acres utilizing tractor/off-road jammer (1,212 acres), skyline (969 acres), and helicopter (1,084 acres) logging systems. In addition to the tractor/off-road jammer acres, mechanized feller bunchers (track mounted) would be used on acreage designated as skyline or helicopter yarding where ground slope is less than 35 percent; thinning of noncommercial trees would occur on approximately 3,265 acres following commercial timber harvest activities; and, noncommercial thinning of small diameter trees would also occur on an additional 839 acres of existing plantations. Approximately 163 acres of these plantation thinning activities would occur within riparian conservation areas (RCAs).

Activity fuel treatments would occur on approximately 4,104 acres, including: (1) Lopping of activity fuels on approximately 839 acres of non-commercially thinned plantations, slash would be lopped to a depth of no greater than 36 inches; (2) manipulation of activity fuels on approximately 1069 acres in lower elevation ponderosa pine forests including whole tree yarding with burning of landing piles (543 acres) and lopping of slash to a depth of no greater than 36 inches (526 acres); (3) prescribed underburn would occur on about 962 acres following activity fuels treatments; and (4) manipulation of activity fuels on approximately 2,196 acres in mid-elevation mixed conifer forests including whole tree yarding with burning of landings (627 acres), whole tree yarding with top haul back into units (1,011 acres), and lopping of slash to a depth of no greater than 36 inches (558 acres).

Road activities would occur on approximately 43.6 miles of roads in order to facilitate commercial timber harvest. *Activities include:* (1) Construction of about 2.7 miles of new specified NFS road; (2) construction of approximately 1.0 mile of temporary road; (3) realignment of a segment of NFS Road 696D (note, realignment would utilize approximately 0.4 miles of an existing unauthorized road prism and require about 0.1 miles of new road prism construction, and once relocation construction is completed approximately 0.1 miles of the relocated segment of NFS Road 696D would be decommissioned); and (4) road maintenance activities would occur on about 39.3 miles of NFS roads consistent with approved road management objectives (note, road maintenance activities may include but are not limited to road prism blading, spot aggregate placement, drainage improvements, roadway clearing, and roadway ditch/culvert inlets cleaning).

To improve watershed conditions approximately 16.1 miles of additional road activities would occur, including (1) decommissioning 12.8 miles of NFS roads and 3.3. miles of unauthorized routes; (2) NFS Road 696 would be realigned to provide long-term, year-long, access and eliminate segments of the road within the RCA corridors (note, realignment would utilize approximately 3.5 miles of existing NFS roads and require about 4.3 miles of new road prism construction, and once relocation construction is completed approximately 3.8 miles of the relocated segments of NFS Road 696 would be decommissioned); (3) road reconstruction activities would occur to upgrade the road surface type through placement of new surface aggregate on about 2.8 miles of NFS roads; (4) placement of new aggregate for up to 300 feet on both sides of perennial stream crossings along NFS roads to be used for commercial harvest activities, except on NFS roads proposed to be decommissioned; and (5) three road/stream crossings would be replaced in order to provide aquatic organism passage.

The proposed action would provide approximately 16.5 million board feet (mmbf) as sawlogs to local and/or regional processing facilities to support regional and local economies.

Possible Alternatives: Additional alternatives may be developed that include: (1) Adding acres for vegetation restoration over that identified in the proposed action in areas accessible from the existing transportation system to improve management efficiency and economic return to support other restoration work; (2) greater retention of late seral large diamter trees throughout the project area; (3) using termporary roads rather than constructing new permanent NFS roads to facilitate timber harvest; (4) removal of commercial treatment units adjacent to Inventoried Roadless Areas (IRA) to reduce visual impacts as seen from recreationists using the IRA; and (5) replacement of additional road/stream crossing to provide aquatic organism passage.

Responsible Official: The Responsible Official is the Forest Supervisor for the Boise National Forest, Cecilia R. Seesholtz.

Nature of Decision To Be Made: The decisions to be made include (1) Should vegetation restoration in the project area be done, and if so, which forested stands should be treated and what silvicultural treatments should be applied? (2) Should activity fuel treatments be completed at this time in the project area, and if so, which treatments should be applied? (3) Should modifications be made to the NFS transportation system as recommended by the Scriver Creek Subwatershed Travel Analysis Process (TAP) Report (USDA Forest Service 2011b), and if so, which road activities should occur? (4) What design features, mitigation measures, and/or monitoring should be applied to the project?

Preliminary Issues: Five preliminary issues have been identified: (1) Restoration can be expensive; to improve efficiency and funding support of restoration efforts within the Scriver drainage, additional acres in need of vegetation restoration that are accessible from the existing transporation system should be included; (2) Commercial treatments adjacent to IRAs may impact visual values as viewed by recreationists within the IRA, thus commercial harvest treatments adjacent to IRAs should be eliminated; (3) Permanent national forest system (NFS) roads can increase long term resource impacts and road maintenance funding needs; permanent NFS roads should not be constructed to support timber harvest where temporary roads could meet the access need; (4) To ensure funding for restoration can be capitalized upon when it becomes available, all known soil and water restoration needs within the project area should be identified and included to ensure the NEPA decision is in place to support their immediate implementation; and, (5) Some wildlife species will be impacted by proposed restoration activities which include removal of a portion of the large diameter late seral tree species (e.g. grand fir) in order to promote restoration objectives for early seral tree species (e.g. ponderosa pine); because large diameter trees within low to mid-elevation forests are believed to be relatively scarce on the landscape compared to historic levels, all large diameter trees, regardless of tree species, should be retained to support wildlife species associated with the existing mix of large tree species.

Permits and Licenses That May Be Required: The following permits may be required to implement the Proposed Action under the Clean Water Act: (1) Part 401 Compliance from the Idaho Department of Environmental Quality; (2) Part 401 Stream Alteration Permit from the Idaho Department of Water Resources; (3) Part 404 Permit from the U.S. Army Corps of Engineers; and, (4) National Pollutant Discharge Elimination System (NPDES) permit from the U.S. Environmental Protection Agency.

Early notice of importance of public participation in subsequent environmental review: Project scoping occurred in May 2010. No additional scoping efforts will occur as part of the SDEIS preparation process. A Notice of Availability (NOA) will be published in the **Federal Register** and a legal notice will be published in the newspaper of record for the Boise National Forest, the Idaho Statesman, to inform the public when the SDEIS is available for review and comment. The SDEIS will be distributed to all parties who responded during the scoping process in May 2010, to the DEIS released in December 2011, or who otherwise notified the Agency at some point, including following publication of this NOI to prepare a SDEIS, of their interest to continue to receive information pertaining to this proposal.

The SDEIS is expected to be published on or about August 3, 2012. The comment period on the SDEIS will end 45 days following the date of publication of the notice of availability (NOA) in the **Federal Register**. The publication date in the **Federal Register** is the only means for calculating the comment period for the SDEIS. Based on an anticipated SDEIS NOA publication date of August 3, 2012, comments on the SDEIS must be received on or before September 18, 2012. The Final EIS and ROD are anticipated to be released within 30 days following the close of the SDEIS comment period.

The Forest Service believes, at this early stage, it is important to give reviewers notice of several court rulings related to public participation in the environmental review process. First, reviewers of Draft EISs, including SDEISs, must structure their participation in the environmental review of the proposal so that it is meaningful and alerts an agency to the reviewer's position and contentions. *Vermont Yankee Nuclear Power Corp.* v. *NRDC,* 435 U.S. 519, 553 (1978). Also, environmental objections that could be raised at the Draft EIS, or SDEIS, stage but that are not raised until after completion of the final environmental impact statement may be waived or dismissed by the courts. *City of Angoon* v. *Hodel,* 803 F. 2d 1016, 1022 (9th Cir. 1986) and *Wisconsin Heritages, Inc.* v. *Harris,* 490 F. Supp. 1334, 1338 (E.D. Wis. 1980). Because of these court rulings, it is very important that those interested in this proposed action participate by the close of the 45-day comment period so that substantive comments and objections are made available to the Forest Service at a time when it can meaningfully consider them and respond to them in the final environmental impact statement.

To assist the Forest Service in identifying and considering issues and concerns on the proposed action, comments on the SDEIS should be as specific as possible. It is also helpful if comments refer to specific pages or chapters of the SDEIS. Comments may also address the adequacy of the SDEIS or the merits of the alternatives formulated and discussed in the statement. Reviewers may wish to refer to the Council on Environmental Quality Regulations for implementing the procedural provisions of the National Environmental Policy Act at 40 CFR 1503.3 in addressing these points.

In the final EIS, the Forest Service is required to respond to substantive comments received during the comment periods for both the DEIS released in December 2011 and the SDEIS anticipated to be released in August 2012.

Authority: 40 CFR 1502.9; Forest Service Handbook 1909.15, Section 18.2.

Dated: June 11, 2012.

Cecilia R. Seesholtz,

Forest Supervisor, Boise National Forest.

[FR Doc. 2012–14657 Filed 6–15–12; 8:45 am]

BILLING CODE 3410–11–M

DEPARTMENT OF COMMERCE

International Trade Administration

[A–357–812]

Honey From Argentina: Final Results of Antidumping Duty Administrative Review

AGENCY: Import Administration, International Trade Administration, Department of Commerce.

SUMMARY: On January 10, 2012, the Department of Commerce (the Department) published its preliminary results of the 2009–2010 administrative review of the antidumping duty order on honey from Argentina.[1] The review

[1] *See Honey From Argentina: Preliminary Results of Antidumping Duty Administrative Review and Partial Rescission of Antidumping Duty*

Continued

covers imports of subject merchandise from nine companies. The period of review (POR) is December 1, 2009, through November 30, 2010. The final weighted-average dumping margins for the exporters are listed below in the ''Final Results of Review'' section of this notice.

DATES: *Effective Date:* June 18, 2012.

FOR FURTHER INFORMATION CONTACT: John Drury or Angelica Mendoza, AD/CVD Operations, Office 7, Import Administration, International Trade Administration, U.S. Department of Commerce, 14th Street and Constitution Avenue NW., Room 7850, Washington, DC 20230; telephone (202) 482–0195 or (202) 482–3019, respectively.

SUPPLEMENTARY INFORMATION:

Background

On January 10, 2012, the Department published in the **Federal Register** the preliminary results of the administrative review of the antidumping duty order on honey from Argentina for the period December 1, 2009, to November 30, 2010. *See Preliminary Results.* With respect to the margins preliminarily assigned to non-selected companies, in the *Preliminary Results* the Department stated that it intended ''to request from all non-selected companies certain information regarding sales of honey made to the United States during the POR to determine the appropriateness of our preliminary margin assignments for these companies.'' *Id.* at 1462–63. The Department issued a letter to all non-selected respondents requesting quantity and value information for sales made during the POR by each non-selected respondent. The Department received responses from Mielar S.A./Compañía Apícola Argentina S.A. (Mielar), Patagonik S.A. (Patagonik), Industrial Haedo S.A. (Haedo), A.G.L.H. S.A. (AGLH), and Algodonera Avellaneda, S.A. (Algodonera). The Department did not receive a response from El Maná S.A.

We invited parties to comment on the *Preliminary Results* as well as the responses to the quantity and value information submitted by parties, and received comments from AGLH, Haedo, and Mielar. We did not receive any rebuttal comments and no hearing was requested.

Period of Review

The POR is December 1, 2009, through November 30, 2010.

Administrative Review, 77 FR 1458 (January 10, 2012) (*Preliminary Results*).

Scope of the Order

The merchandise covered by the order is honey from Argentina. The products covered are natural honey, artificial honey containing more than 50 percent natural honey by weight, preparations of natural honey containing more than 50 percent natural honey by weight, and flavored honey. The subject merchandise includes all grades and colors of honey whether in liquid, creamed, comb, cut comb, or chunk form, and whether packaged for retail or in bulk form. The merchandise is currently classifiable under subheadings 0409.00.00, 1702.90.90, and 2106.90.99 of the *Harmonized Tariff Schedule of the United States* (*HTSUS*). Although the *HTSUS* subheadings are provided for convenience and Customs purposes, the Department's written description of the merchandise under this order is dispositive.

Analysis of Comments Received

All issues raised in the case briefs by parties to this administrative review are addressed in the accompanying Issues and Decision Memorandum (I&D Memo), which is hereby adopted by this notice. A list of the issues which parties have raised, and to which we have responded in the I&D Memo, is attached to this notice as an Appendix. In addition, a complete version of the I&D Memo can be accessed directly by the Internet at *http://ia.ita.doc.gov/frn.* The paper copy and electronic version of the I&D Memo are identical in content.

Changes Since the Preliminary Results

The Department has assigned a rate of zero to all of the non-selected respondents that provided quantity and value information. For El Maná S.A., which did not provide the requested information, we have assigned a rate of 0.77 as adverse facts available. See the I&D Memo for further discussion.

Final Results of Review

We determine that the following dumping margins exist for the period December 1, 2009, through November 30, 2010:

Exporter	Weighted-average margin (percentage)
Compania Inversora Platense S.A	0.00
TransHoney S.A. and Einsof Trade S.A	0.00
AGLH S.A	0.00
Algodonera Avellaneda S.A	0.00
Compania Apicola Argentina S.A	0.00
El Maná S.A	0.77
Industrial Haedo S.A	0.00
Mielar S.A	0.00
Patagonik S.A	0.00

Assessment Rates

Pursuant to section 751(a)(2)(A) of the Tariff Act of 1930, as amended (the Act) and 19 CFR 351.212(b), the Department will determine, and U.S. Customs and Border Protection (CBP) shall assess, antidumping duties on all appropriate entries of subject merchandise in accordance with the final results of this review. For assessment purposes, we calculated importer (or customer)-specific assessment rates for merchandise subject to this review. Where appropriate, we calculated an *ad valorem* rate for each importer (or customer) by dividing the total dumping margins for reviewed sales to that party by the total entered values associated with those transactions. For duty assessment rates calculated on this basis, we will direct CBP to assess the resulting *ad valorem* rate against the entered customs values for the subject merchandise. Where appropriate, we calculated a per-unit rate for each importer (or customer) by dividing the total dumping margins for reviewed sales to that party by the total sales quantity associated with those transactions. For duty-assessment rates calculated on this basis, we will direct CBP to assess the resulting per-unit rate against the entered quantity of the subject merchandise. Where an importer (or customer)-specific assessment rate is *de minimis* (*i.e.,* less than 0.50 percent), the Department will instruct CBP to assess that importer (or customer's) entries of subject merchandise without regard to antidumping duties, in accordance with 19 CFR 351.106(c)(2). The Department intends to issue assessment instructions to CBP 15 days after the date of publication of these final results of review.

The Department clarified its automatic assessment regulation on May 6, 2003 (68 FR 23954). This clarification will apply to entries of subject merchandise during the POR produced by the company(ies) included in these final results of review for which the reviewed company(ies) did not know their merchandise was destined for the United States. In such instances, we will instruct CBP to liquidate un-reviewed entries at the all-others rate if there is no rate for the intermediate company(ies) involved in the transaction. For a full discussion of this clarification, *see*

Antidumping and Countervailing Duty Proceedings: Assessment of Antidumping Duties, 68 FR 23954 (May 6, 2003).

Cash Deposit Requirements

The following cash deposit requirements will be effective upon publication of the final results of this administrative review for all shipments of the subject merchandise entered, or withdrawn from warehouse, for consumption on or after the publication date of these final results, consistent with section 751(a)(1) of the Act: (1) for the companies covered by this review, no cash deposit will be required; (2) if the exporter is not a firm covered in this review, but was covered in a previous review or the original less than fair value (LTFV) investigation, the cash deposit rate will continue to be the company-specific rate published for the most recent period; (3) if the exporter is not a firm covered in this review, a prior review, or the original LTFV investigation, but the manufacturer is, the cash deposit rate will be the rate established for the most recent period for the manufacturer of the merchandise; and (4) if neither the exporter nor the manufacturer is a firm covered in this or any previous review conducted by the Department, the cash deposit rate will continue to be 30.24 percent, which is the all-others rate established in the LTFV investigation. *See Notice of Antidumping Duty Order; Honey From Argentina,* 66 FR 63672 (December 10, 2001). These deposit requirements, when imposed, shall remain in effect until further notice.

Reimbursement of Duties

This notice also serves as a final reminder to importers of their responsibility under 19 CFR 351.402(f) to file a certificate regarding the reimbursement of antidumping duties prior to liquidation of the relevant entries during this review period. Failure to comply with this requirement could result in the Secretary's presumption that reimbursement of antidumping duties occurred and the subsequent assessment of doubled antidumping duties.

Administrative Protective Order

This notice also serves as a reminder to parties subject to administrative protective orders (APO) of their responsibility concerning the return or destruction of proprietary information disclosed under APO in accordance with 19 CFR 351.305, which continues to govern business proprietary information in this segment of the proceeding. Timely written notification of the return/destruction of APO materials or conversion to judicial protective order is hereby requested. Failure to comply with the regulations and terms of an APO is a violation, which is subject to sanction.

We are issuing and publishing this notice in accordance with sections 751(a)(1) and 777(i)(1) of the Act.

Dated: June 8, 2012.

Paul Piquado,

Assistant Secretary for Import Administration.

Appendix I

List of Comments in the Accompanying Issues and Decision Memorandum

Comment 1: Rates Assigned to Non-Selected Respondents

[FR Doc. 2012–14827 Filed 6–15–12; 8:45 am]

BILLING CODE 3510–DS–P

DEPARTMENT OF COMMERCE

International Trade Administration

[A–570–831]

Fresh Garlic From the People's Republic of China: Notice of Court Decision Not in Harmony With Final Results of Administrative Review and Notice of Amended Final Results of Administrative Review

AGENCY: Import Administration, International Trade Administration, Department of Commerce.

SUMMARY: On June 5, 2012,[1] the United States Court of International Trade (''CIT'') or (''Court'') sustained the Department of Commerce's (the ''Department'') results of redetermination [2] pursuant to the CIT's remand order in *Jinan Yipin Corporation, Ltd. and Shandong Heze International Trade and Developing Company,* v. *United States,* 774 F. Supp. 2d 1238 (CIT April 12, 2011) (''Jinan Yipin III 2011'').

Consistent with the decision of the United States Court of Appeals for the Federal Circuit (''CAFC'') in *Timken Co.* v. *United States,* 893 F.2d 337 (Fed. Cir. 1990) (''*Timken*''), as clarified by *Diamond Sawblades Mfrs. Coalition* v. *United States,* 626 F.3d 1374 (Fed. Cir. 2010) (''*Diamond Sawblades*''), the Department is notifying the public that the final judgment in this case is not in harmony with *Garlic AR8 Final Results* [3] and is amending the final results of the administrative review of the antidumping duty order on fresh garlic from the People's Republic of China (''PRC'') covering the period of review (''POR'') of November 1, 2001 through October 31, 2002, with respect to the margins assigned to Jinan Yipin Corporation Ltd. (''Jinan Yipin'') and Shandong Heze International Trade And Developing Company (''Shandong Heze'').

DATES: *Effective Date:* (June 15, 2012).

FOR FURTHER INFORMATION CONTACT: Lindsey Novom, Office 8, Import Administration, International Trade Administration, U.S. Department of Commerce, 14th Street and Constitution Avenue NW., Washington, DC 20230; telephone: (202) 482–5256.

SUPPLEMENTARY INFORMATION:

Background

Subsequent to completion of the eighth administrative review of the antidumping duty order on fresh garlic from the PRC,[4] two respondents, Jinan Yipin and Shandong Heze, challenged certain aspects of the Department's final results of review at the CIT. On November 15, 2007, the CIT affirmed in part the *Garlic AR8 Final Results* and remanded other aspects of the decision to the Department.[5] On March 14, 2008, the Department issued its remand redetermination,[6] wherein we: (1) Treated sales by Jinan Yipin to Houston Seafood negotiated after March 29, 2002 as unaffiliated party transactions; (2) recalculated Jinan Yipin's weighted-average dumping margin by including all of its reported POR sales information (rather than applying the 376.67 percent rate to certain transactions); (3) recalculated Jinan Yipin's indirect selling expenses incurred in the United States; (4) continued to rely on data from the National Horticultural Research and Development Foundation (''NHRDF'') to value Jinan Yipin and

[1] *Jinan Yipin Corporation, Ltd. and Shandong Heze International Trade and Developing Company,* v. *United States,* Slip Op. 12–68 (CIT June 5, 2012) (judgment).

[2] Final Results of Third Redetermination Pursuant to Court Remand filed with the Court September 7, 2011 (signed September 2, 2011) (''*Jinan Yipin III Redetermination*'') available at: *http://www.ia.ita.doc.gov/remands/index.html.*

[3] *See Fresh Garlic From the People's Republic of China: Final Results of Antidumping Duty Administrative Review and New Shipper Reviews,* 69 FR 33626 (June 16,2004) (''*Garlic AR8 Final Results*''), and accompanying Issues and Decision Memorandum (''Issues and Decision Memorandum'').

[4] *See Garlic AR8 Final Results.*

[5] *See Jinan Yipin Corporation, Ltd. and Shandong Heze International Trade and Developing Company,* v. *United States* 526 F. Supp. 2d 1347 (CIT Nov. 15, 2007) (''*Jinan Yipin I 2007*'').

[6] *See Jinan Yipin Corporation, Ltd. and Shandong Heze International Trade and Developing Company* v. *United States,* Consol, Court No. 04–00240, Slip Op. 07–168 (November 15, 2007) Final Results of Redetermination Pursuant to Court Remand, dated March 14, 2008 (''*Jinan Yipin I Redetermination*'') available at: *http://www.ia.ita.doc.gov/remands/index.html.*

Shangdong Heze's garlic seed used in the production of fresh garlic; (5) continued to value water with municipal water rates to account for the respondents' water consumption used in the production of fresh garlic; and (6) continued to value Jinan Yipin's packing cartons with Indian Import Statistics. As a result, we calculated a revised weighted-average margin for Jinan Yipin, however Shandong Heze's antidumping duty margin remained consistent with the margin issued in *Garlic AR8 Final Results.*

On July 2, 2009, the CIT affirmed the *Jinan Yipin I Redetermination,* with regard to issues 1, 2, and 3, discussed above. However, the Court remanded the redetermination with regard to issues 4, 5, and 6, discussed above. Additionally, the Court directed the Department to examine an alleged ministerial error in the calculation of the surrogate financial ratios that Jinan Yipin raised for the first time in this proceeding in its comments on the draft redetermination pursuant to *Jinan Yipin I 2007.* The Department had declined to address this ministerial error allegation in the *Jinan Yipin I Redetermination* on the basis that the alleged ministerial error was not raised during the administrative proceeding pursuant to our regulations [7] or in Jinan Yipin's complaint in this litigation, and the issue was not remanded by the Court, and, therefore, was not before the Department on remand.[8]

On February 25, 2010, the Department issued its second remand redetermination,[9] wherein we: (1) Again continued to rely on data from the NHRDF to value Jinan Yipin and Shangdong Heze's garlic seed used in the production of fresh garlic; (2) re-evaluated both respondent's water consumption and determined to value the irrigation pumping costs (*i.e.,* the energy used to pump the water) rather than valuing the water consumed in production, because both respondents incur only the irrigation cost associated with pumping the water from wells; (3) continued to value Jinan Yipin's packing cartons with Indian Import Statistics, however, in response to the Court's directive we provided further explanation as to why the Department had determined to exclude imports from Indonesia, South Korea, and Thailand in deriving this surrogate value; and (4) determined that we had made a ministerial error in the calculation of the surrogate financial ratios, as alleged by Jinan Yipin, and corrected this ministerial error as directed by the Court. As a result, we calculated revised weighted-average dumping margins of 6.58 percent for Jinan Yipin and 40.66 percent for Shandong Heze.

In the *Jinan Yipin II Redetermination,* the Department declined to address an argument put forth by Jinan Yipin concerning the calculation of its surrogate labor wage rate, on the basis that the company raised the issue for the first time in its comments on the draft version of that redetermination.[10] However, during the pendency of this litigation, the CAFC issued its decision in *Dorbest Ltd.* v. *United States,* 604 F.3d 1363, 1372–73 (Fed. Cir. 20 I0) (''*Dorbest''*), invalidating the Department's regulation, 19 CFR 35 IA08(c)(3), which previously governed our calculation of a respondent's surrogate labor wage rate. On June 30, 2010, with the Department's consent, Jinan Yipin moved to amend its complaint to add a new count, ''Count 8,'' challenging our prior calculation of the company's surrogate labor wage rate under 19 CFR 351A08(c)(3).

The CIT granted Jinan Yipin leave to amend its complaint to add this new count on July 20, 2010. On April 12, 2011, the CIT issued its opinion in *Jinan Yipin III* and granted the Department's request for a voluntary remand for the purpose of recalculating Jinan Yipin's surrogate labor wage rate.[11] In that opinion, the CIT upheld the *Jinan Yipin II Redetermination* with regard to all other issues.

On September 7, 2012 the Department filed its third remand redetermination with the Court, wherein we recalculated the surrogate wage rate for Jinan Yipin.[12] As a result, we calculated a revised weighted-average dumping margins of 1.77 percent for Jinan Yipin.

Timken Notice

In its decision in *Timken,* 893 F.2d at 341, as clarified by *Diamond Sawblades,* the CAFC has held that, pursuant to section 516A(e) of the Act, the Department must publish a notice of a court decision that is not ''in harmony'' with a Department determination and must suspend liquidation of entries pending a ''conclusive'' court decision. The CIT's June 5, 2012, judgment sustaining the *Jinan Yipin III Redetermination* constitutes a final decision of that court that is not in harmony with the *Garlic AR8 Final Results.* This notice is published in fulfillment of the publication requirements of *Timken.* Accordingly, the Department will continue the suspension of liquidation of the subject merchandise pending the expiration of the period of appeal or, if appealed, pending a final and conclusive court decision. The cash deposit rates will remain the respective company-specific rates established for the subsequent and most recent period during which the respondents were reviewed.

Amended Final Results

Because there is now a final court decision with respect to these Plaintiffs, the revised dumping margins are as follows:

Exporter	Weighted-average margin (percent)
Jinan Yipin Corporation, Ltd.[13]	1.77
Shandong Heze International Trade and Developing Company [14]	40.66

In the event the CIT's ruling is not appealed or, if appealed, upheld by the CAFC, the Department will instruct U.S. Customs and Border Protection to assess antidumping duties on entries of the subject merchandise during the POR from the two companies named above based on the revised assessment rates calculated by the Department.

This notice is issued and published in accordance with sections 516A(e)(1), 751(a)(1), and 777(i)(1) of the Act.

Dated: June 11, 2012.

Paul Piquado,

Assistant Secretary for Import Administration.

[FR Doc. 2012–14735 Filed 6–15–12; 8:45 am]

BILLING CODE 3510–DS–P

[7] 19 CFR 351.224.

[8] *See Jinan Yipin I Redetermination* at p. 36.

[9] *See Jinan Yipin Corporation, Ltd. and Shandong Heze International Trade and Developing Company* v. *United States,* Consol, Court No. 04–00240, Slip Op. 09–70 (CIT July 2, 2009) Final Results of Redetermination Pursuant to Court Remand, dated February 25, 2010 (''*Jinan Yipin II Redetermination''*) available at: *http://www.ia.ita.doc.gov/remands/index.html.*

[10] *See Jinan Yipin II Redetermination* at Comment 4.

[11] *See Jinan Yipin III* at 18.

[12] *See Jinan Yipin III Redetermination.*

[13] *See Jinan Yipin III Redetermination.*

[14] *See Jinan Yipin II Redetermination.*

DEPARTMENT OF COMMERCE

International Trade Administration

[A–533–852]

Circular Welded Carbon-Quality Steel Pipe From India: Postponement of Final Determination of Antidumping Duty Investigation

AGENCY: Import Administration, International Trade Administration, Department of Commerce

DATES: *Effective Date:* June 18, 2012.

FOR FURTHER INFORMATION CONTACT: Steve Bezirganian or Robert James, AD/CVD Operations, Office 7, Import Administration, International Trade Administration, U.S. Department of Commerce, 14th Street and Constitution Avenue NW., Washington DC 20230; telephone: (202) 482–1131 or (202) 482–0649, respectively.

SUPPLEMENTARY INFORMATION:

Background

On November 15, 2011, the Department of Commerce (''Department'') initiated an antidumping duty investigation on circular welded carbon-quality steel pipe from India.[1] On June 1, 2012, the Department published its preliminary determination of sales at less than fair value.[2] The final determination of this antidumping duty investigation is currently due on August 6, 2012.

Postponement of Final Determination and Extension of Provisional Measures

Section 735(a)(2) of the Act provides that the Department may postpone a final determination until no later than 135 days after the date of the publication of the preliminary determination if, in the event of an affirmative determination, a request for such postponement is made by exporters who account for a significant proportion of exports of the subject merchandise, or in the event of a negative preliminary determination, a request for such postponement is made by petitioner. In addition, 19 CFR 351.210(e)(2) requires that requests by respondents for postponement of a final determination be accompanied by a request for extension of provisional measures from a four-month period to not more than six months.

On June 6, 2012, Zenith Birla (India) Limited, the sole mandatory respondent in this investigation, requested a postponement of the final determination and an extension of the provisional measures pursuant to section 735(a)(2) of the Act and 19 CFR 351.210(e)(2). In accordance with section 735(a)(2) of the Act and 19 CFR 351.210(b), because (1) our preliminary determination is affirmative, (2) the requesting exporter accounts for a significant proportion of exports of the subject merchandise,[3] and (3) no compelling reasons for denial exist, we are granting the request and are postponing the final determination until no later than 135 days after the publication of the preliminary determination notice in the **Federal Register**, or October 14, 2012.[4] Suspension of liquidation will be extended accordingly.

This notice is issued and published pursuant to sections 777(i) and 735(a)(2) of the Act and 19 CFR 351.210(g).

Dated: June 8, 2012.

Paul Piquado,

Assistant Secretary for Import Administration.

[FR Doc. 2012–14737 Filed 6–15–12; 8:45 am]

BILLING CODE 3510–DS–P

[1] *See Circular Welded Carbon-Quality Steel Pipe from India, the Sultanate of Oman, the United Arab Emirates, and the Socialist Republic of Vietnam: Initiation of Antidumping Duty Investigations,* 76 FR 72164 (November 22, 2011).

[2] *See Circular Welded Carbon-Quality Steel Pipe from India: Preliminary Determination of Sales at Less Than Fair Value,* 77 FR 32562 (June 1, 2012). (*Preliminary Determination*).

[3] *See, e.g.,Preliminary Determination,* 77 FR at 32562.

[4] As October 14, 2012, is a Sunday, the signature day will be the next business day, October 15, 2012, in accordance with our practice. *See Notice of Clarification: Application of ''Next Business Day'' Rule for Administrative Determination Deadlines Pursuant to the Tariff Act of 1930, As Amended,* 70 FR 24533 (May 10, 2005).

DEPARTMENT OF COMMERCE

International Trade Administration

[A–423–808, A–449–804, A–405–803, A–475–818, A–421–811, A–469–807, A–475–703, A–588–845]

Notice of Implementation of Determination Under Section 129 of the Uruguay Round Agreements Act: Stainless Steel Plate in Coils From Belgium, Steel Concrete Reinforcing Bars From Latvia, Purified Carboxymethylcellulose From Finland, Certain Pasta From Italy, Purified Carboxymethylcellulose From the Netherlands, Stainless Steel Wire Rod From Spain, Granular Polytetrafluoroethylene Resin From Italy, Stainless Steel Sheet and Strip in Coils From Japan

AGENCY: Import Administration, International Trade Administration, Department of Commerce.

SUMMARY: On June 8, 2012, the U.S. Trade Representative (''USTR'') instructed the Department of Commerce (''Department'') to implement its determinations under section 129 of the Uruguay Round Agreements Act (''URAA'') regarding the recalculation of cash deposit rates for estimated antidumping duties currently in effect for certain companies, in a manner which renders them not inconsistent with the World Trade Organization (''WTO'') dispute settlement findings in *US-Zeroing (EC),*[1] *US-Continued Zeroing (EC),*[2] and *US-Zeroing (Japan).*[3] The Department issued its determinations in the Final Results of its section 129 proceedings[4] on June 6, 2012. The Department is now implementing these Final Results.

DATES: *Effective Date:* June 8, 2012.

FOR FURTHER INFORMATION CONTACT: Sapna Sharma, James Maeder, or Michael Rill, Import Administration, International Trade Administration, U.S. Department of Commerce, 14th Street and Constitution Avenue NW, Washington, DC 20230; telephone: (202) 482–5285, (202) 482–3330, or (202) 482–3058, respectively.

SUPPLEMENTARY INFORMATION:

Background

On February 13, 2012, the USTR requested, pursuant to section 129 of the URAA, that the Department render the cash deposit rates currently in effect for certain companies not inconsistent with the WTO Dispute Settlement Body's (''DSB'') recommendations and rulings in *US-Zeroing (EC), US-Continued Zeroing (EC),* and *US-Zeroing (Japan).* Subsequently, on February 21, 2012, the Department initiated section 129 proceedings for the completed administrative reviews corresponding to the request from the USTR. In each section 129 proceeding, the Department recalculated the cash deposit rates for certain companies, as specified by the USTR, applying the calculation methodology described in *Antidumping Proceedings: Calculation of the*

[1] *United States-Laws, Regulations and Methodology for Calculating Dumping Margins (''Zeroing''),* WT/DS294/R, WT/DS294/AB/R, adopted May 9, 2006; *United States-Laws, Regulations and Methodology for Calculating Dumping Margins (''Zeroing''), Recourse to Article 21.5 of the DSU by the European Communities,* WT/DS294/AB/RW, adopted June 11, 2009 (collectively ''*US-Zeroing (EC)*'').

[2] *United States-Continued Existence and Application of Zeroing Methodology,* WT/DS350/R, WT/DS350/AB/R, adopted February 19, 2009 (''*US-Continued Zeroing (EC)*'').

[3] *United States-Measures Related to Zeroing and Sunset Reviews,* WT/DS322/R, WT/DS322/AB/R, adopted January 23, 2007; *United States-Measures Related to Zeroing and Sunset Reviews, Recourse to Article 21.5 of the DSU by Japan,* WT/DS322/AB/RW, adopted August 31, 2009 (collectively ''*US-Zeroing (Japan)*'').

[4] Memorandum from Christian Marsh, Deputy Assistant Secretary for Antidumping and Countervailing Duty Operations, to Paul Piquado, Assistant Secretary for Import Administration, Final Results of Proceedings Under Section 129: Stainless Steel Plate in Coils from Belgium, Steel Concrete Reinforcing Bars from Latvia, Purified Carboxymethylcellulose from Finland, Certain Pasta from Italy, Purified Carboxymethylcellulose from the Netherlands, Stainless Steel Wire Rod from Spain, Granular Polytetrafluoroethylene Resin from Italy, Stainless Steel Sheet and Strip in Coils from Japan (''Final Results'').

Weighted-Average Dumping Margin and Assessment Rate in Certain Antidumping Duty Proceedings; Final Modification, 77 FR 8101 (February 14, 2012) (''*Final Modification for Reviews*''). The Department has recalculated the current cash deposit rates for these specified companies, listed in the table below, in a manner paralleling the WTO-consistent methodology that the Department applies in antidumping investigations.

Companies	Proceeding	Basis of current cash deposit rate
ArcelorMittal Stainless Belgium N.V.[5].	Stainless Steel Plate in Coils from Belgium, A–423–808.	*Stainless Steel Plate in Coils From Belgium: Final Results of Antidumping Duty Administrative Review,* 74 FR 53468 (October 19, 2009).
Joint Stock Company Liepajas Metalurgs.	Steel Concrete Reinforcing Bars from Latvia, A–449–804.	*Notice of Final Results of Antidumping Duty Administrative Review: Steel Concrete Reinforcing Bars from Latvia,* 71 FR 74900 (December 13, 2006).
CP Kelco[6]	Purified Carboxymethylcellulose from Finland, A–405–803.	*Purified Carboxymethylcellulose From Finland; Notice of Final Results of Antidumping Duty Administrative Review,* 75 FR 73035 (November 29, 2010).
Garofalo[7], Tomasello, Agritalia, Erasmo, Indalco, Labor, PAM, P.A.P., Afeltra, Fabianelli, Riscossa, Rustichella.	Certain Pasta from Italy, A–475–818.	*Certain Pasta From Italy: Notice of Final Results of the Fourteenth Antidumping Duty Administrative Review,* 76 FR 76937 (December 9, 2011).
PAM (for non-selected rate), Garofalo (for non-selected rate), IAPC/Pasta Lensi[8].		*Certain Pasta from Italy: Notice of Amended Final Results of the Twelfth Antidumping Duty Administrative Review,* 75 FR 11116 (March 10, 2010).
Pagani[9]		
Divella,[10] Pasta Zara, Gaetano, Felicetti.		*Certain Pasta From Italy: Notice of Final Results of the Eleventh Administrative Review and Partial Rescission of Review,* 73 FR 75400 (December 11, 2008).
Atar,[11] Corticella/Combattenti		*Notice of Final Results of the Ninth Administrative Review of the Antidumping Duty Order on Certain Pasta from Italy,* 72 FR 7011 (February 14, 2007).
Barilla[12]		*Notice of Final Results of the Eighth Administrative Review of the Antidumping Duty Order on Certain Pasta From Italy and Determination to Revoke in Part,* 70 FR 71464 (November 29, 2005).
Russo/Di Nola[13]		*Notice of Final Results of the Seventh Administrative Review of the Antidumping Duty Order on Certain Pasta from Italy and Determination to Revoke in Part,* 70 FR 6832 (February 9, 2005).
La Molisana[14]		*Certain Pasta From Italy: Final Results of Antidumping Duty Administrative Review,* 65 FR 77852 (December 13, 2000).
Akzo Nobel BV[15]	Purified Carboxymethylcellulose from the Netherlands, A–421–811.	*Purified Carboxymethylcellulose From the Netherlands: Final Results of Antidumping Duty Administrative Review,* 76 FR 66687 (October 27, 2011).
CP Kelco BV		*Purified Carboxymethylcellulose From the Netherlands: Final Results of Antidumping Duty Administrative Review,* 75 FR 77829 (December 14, 2010).
Roldan S.A.	Stainless Steel Wire Rod from Spain, A–469–807.	*Stainless Steel Wire Rod from Spain; Final Results of Antidumping Duty Administrative Review, 66 FR 10988 (February 21, 2001).*
Solvay Solexis SpA (formerly Ausimont SpA)[16].	Granular Polytetrafluoroethylene Resin from Italy, A–475–703.	*Granular Polytetrafluoroethylene Resin From Italy: Amended Final Results of Antidumping Duty Administrative Review,* 74 FR 19931 (April 30, 2009).
Nippon Kinzoku Co., Ltd.	Stainless Steel Sheet and Strip in Coils from Japan, A–588–845.	*Stainless Steel Sheet and Strip in Coils from Japan: Final Results of Antidumping Duty Administrative Review,* 75 FR 6631 (February 10, 2010).

[5] On April 12, 2012, the Department determined that Aperam Stainless Belgium N.V. is the successor-in-interest to ArcelorMittal Stainless Belgium N.V. *Stainless Steel Plate in Coils from Belgium: Notice of Final Results of Antidumping Duty Changed Circumstances Review,* 77 FR 66,271 (April 12, 2012). Therefore, although the request from the USTR identified ArcelorMittal Stainless Belgium N.V. as the respondent from the underlying final results, the recalculated cash deposit rate will be applied to Aperam Stainless Belgium N.V. (''ASB'').

[6] The full name of the company concerning this review is CP Kelco Oy.

[7] The full names of the companies concerning this review are: Pastificio Lucio Garofalo S.p.A. (''Garofalo''), Molino e Pastificio Tomasello S.p.A. (''Tomasello''), Agritalia S.r.L. (''Agritalia''), Domenico Paone fu Erasmo S.p.A. (''Erasmo''), Industria Alimentare Colavita, S.p.A. (''Indalco''), Labor S.r.L. (''Labor''), PAM S.p.A. and its affiliate, Liguori Pastificio dal 1820 S.p.A. (''PAM''), P.A.P. SNC Di Pazienza G.B. & C. (''P.A.P''), Premiato Pastificio Afeltra S.r.L. (''Afeltra''), Pastificio Fabianelli S.p.A. (''Fabianelli''), Pastificio Riscossa F.lli Mastromauro S.p.A. (''Riscossa''), and Rustichella d'Abruzzo S.p.A (''Rustichella'').

[8] Pasta Lensi S.r.l. (''Pasta Lensi'') was found to be the successor-in-interest to Italian American Pasta Company Italia S.r.l. (''IAPC'') for purposes of determining antidumping (and countervailing duty) liability. *See Notice of Final Results of Antidumping and Countervailing Duty Changed Circumstances Reviews: Certain Pasta From Italy,* 68 FR 41553 (July 17, 2003).

[9] The full name of this company is Pastificio Fratelli Pagani S.p.A. (''Pagani'').

[10] The full names of the companies concerning this review are: F. Divella SpA (''Divella''), Pasta Zara SpA 1 and Pasta Zara SpA 2 (collectively, ''Pasta Zara''), Pastificio Di Martino Gaetano & F. lli SrL (''Gaetano''), and Pastificio Felicetti SrL (''Felicetti'').

[11] The full names of the companies concerning this review are: Atar, S.r.L. (''Atar'') and Corticella Molinie Pastifici S.p.A. and its affiliate Pasta Combattenti S.p.A. (collectively,''Corticella/Combattenti'').

[12] The full name of this company is G.e.R. Barilla Fratelli, S.p.A.

[13] The full name of this collapsed entity is Pastificio Carmine Russo S.p.A./Pastificio De Nola S.p.A.

[14] The full name of this company is La Molisana Industrie Alimentari S.p.A.

[15] The full name of this company is Akzo Nobel Functional Chemicals B.V. In the USTR letter, the first word in the name of this company is spelled ''Azko'' instead of ''Akzo.''

[16] *See Granular Polytetrafluoroethylene Resin From Italy: Final Results of Changed Circumstances Review,* 68 FR 25327 (May 12, 2003).

On March 23, 2012, the Department issued its Preliminary Results for these section 129 proceedings.[17] On April 9 and 10, 2012, the Department received case briefs from interested parties, and on April 16, 2012, the Department received rebuttal briefs. The Department issued its Final Results on June 6, 2012, in which it addressed all comments from interested parties.

On June 7–8, 2012, consistent with section 129(b)(3) of the URAA, the USTR held consultations with the Department and the appropriate congressional committees with respect to these Final Results. On June 8, 2012, in accordance with sections 129(b)(4) and 129(c)(1)(B) of the URAA, the USTR directed the Department to implement these Final Results.

Nature of the Proceedings

Section 129 of the URAA governs the nature and effect of determinations issued by the Department to implement findings by WTO dispute settlement panels and the Appellate Body. Specifically, section 129(b)(2) provides that ''notwithstanding any provision of the Tariff Act of 1930,'' within 180 days of a written request from the USTR, the Department shall issue a determination that would render its actions not inconsistent with an adverse finding of a WTO panel or the Appellate Body.[18] The Statement of Administrative Action, U.R.A.A., H. Doc. 316, Vol. 1, 103d Cong. (1994) (''SAA''), variously refers to such a determination by the Department as a ''new,'' ''second,'' and ''different'' determination.[19] After consulting with the Department and the appropriate congressional committees, the USTR may direct the Department to implement, in whole or in part, the new determination made under section 129.[20] Pursuant to section 129(c), the new determination shall apply with respect to unliquidated entries of the subject merchandise that are entered or withdrawn from warehouse, for consumption, on or after the date on which the USTR directs the Department to implement the new determination.[21] The new determination is subject to judicial review, separate and apart from judicial review of the Department's original determination.[22]

Final Results: Analysis of Comments Received

The issues raised in the case and rebuttal briefs submitted by interested parties to these proceedings are addressed in the Final Results. The issues included in the Final Results are (1) Targeted dumping, and (2) cash deposit rates for non-selected respondents. The Final Results is a public document and is on file electronically via Import Administration's Antidumping and Countervailing Duty Centralized Electronic Service System (''IA ACCESS''). Access to IA ACCESS is available in the Central Records Unit, room 7046 of the main Department of Commerce building. In addition, a complete version of the Final Results can be accessed directly on the Internet at *http://www.trade.gov/ia/.*

Final Results: Recalculated Cash Deposit Rates

The recalculated cash deposit rates, as included in the Final Results and which remain unchanged from the Preliminary Results for each company, are as follows:

Antidumping order (review period)	Manufacturer/exporter	Cash deposit rate	
		Underlying administrative review (%)	Section 129 proceedings final results (%)
Stainless Steel Plate in Coils from Belgium (2007/08)	Amperam Stainless Belgium N.V	6.57	0.00
Steel Concrete Reinforcing Bars from Latvia (2004/05)	Joint Stock Company Liepajas Metalurgs	5.94	4.87
Purified Carboxymethylcellulose from Finland (2008/09)	CP Kelco Oy	6.10	0.00
Certain Pasta from Italy (2009/10)	Pastificio Lucio Garofalo S.p.A	3.20	0.00
	Molino e Pastificio Tomasello S.p.A	4.18	0.00
	Agritalia S.r.L	3.57	0.00
	Domenico Paone fu Erasmo S.p.A	3.57	0.00
	Industria Alimentare Colavita, S.p.A	3.57	0.00
	Labor S.r.L	3.57	0.00
	PAM S.p.A. and Liguori Pastificio dal 1820 S.p.A	3.57	0.00
	P.A.P. SNC Di Pazienza G.B. & C	3.57	0.00
	Premiato Pastificio Afeltra S.r.L	3.57	0.00
	Pastifico Fabianelli S.p.A	3.57	0.00
	Pastificio Riscossa F.lli Mastromauro S.p.A	3.57	0.00
	Rustichella d'Abruzzo S.p.A	3.57	0.00
Certain Pasta from Italy (2007/08)	PAM S.p.A. and Liguori Pastificio dal 1820 S.p.A	8.54	5.49
	Pastificio Lucio Garofalo S.p.A	15.87	14.63
	Pasta Lensi S.r.L	12.21	10.06
	Pastificio Fratelli Pagani S.p.A	12.21	10.06
Certain Pasta from Italy (2006/07)	F. Divella S.p.A	2.83	0.00
	Pasta Zara S.p.A. 1 and Pasta Zara S.p.A. 2	9.71	0.00
	Pastificio Di Martino Gaetano & F.lli S.r.L	6.27	0.00
	Pastificio Felicetti S.r.L	6.27	0.00
Certain Pasta from Italy (2004/05)	Atar, S.r.L	18.18	0.00
	Corticella Molini e Pastifici S.p.A. and Pasta Combattenti S.p.A.	1.95	0.00
Certain Pasta from Italy (2003/04)	Barilla G.e.R. Fratelli S.p.A	20.68	19.55

[17] Memorandum from Christian Marsh, Deputy Assistant Secretary for Antidumping and Countervailing Duty Operations, to Paul Piquado, Assistant Secretary for Import Administration, Preliminary Results for the Section 129 Proceedings: Stainless Steel Plate in Coils from Belgium, Steel Concrete Reinforcing Bars from Latvia, Purified Carboxymethylcellulose from Finland, Certain Pasta from Italy, Purified Carboxymethylcellulose from the Netherlands, Stainless Steel Wire Rod from Spain, Granular Polytetrafluoroethylene Resin from Italy, Stainless Steel Sheet and Strip in Coils from Japan (''Preliminary Results'').

[18] *See* 19 U.S.C. 3538(b)(2).

[19] *See* SAA at 1025, 1027.

[20] *See* 19 U.S.C. 3538(b)(4).

[21] *See* 19 U.S.C. 3538(c).

[22] *See* 19 U.S.C. 1516a(a)(2)(B)(vii).

Antidumping order (review period)	Manufacturer/exporter	Cash deposit rate	
		Underlying administrative review (%)	Section 129 proceedings final results (%)
Certain Pasta from Italy (2002/03)	Pastificio Carmine Russo S.p.A. and Pastificio Di Nola S.p.A.	7.36	0.00
Certain Pasta from Italy (1998/99)	La Molisana Industrie Alimerntari S.p.A	5.26	0.00
Purified Carboxymethylcellulose from the Netherlands (2009/10).	Akzo Nobel Functional Chemicals B.V	3.57	0.00
Purified Carboxymethylcellulose from the Netherlands (2008/09).	CP Kelco B.V	2.64	0.00
Stainless Steel Wire Rod from Spain (1998/99)	Roldan S.A	0.80	0.00
Granular Polytetrafluoroethylene Resin from Italy (2006/07).	Solvay Solexis S.p.A	79.45	79.45
Stainless Steel Sheet and Strip in Coils from Japan (2007/08).	Nippon Kinzoku Co., Ltd	0.54	0.00

Implementation of the Revised Cash Deposit Requirements

On June 8, 2012, in accordance with sections 129(b)(4) and 129(c)(1)(B) of the URAA and after consulting with the Department and Congress, the USTR directed the Department to implement these Final Results. With respect to each of these proceedings, the Department will instruct U.S. Customs and Border Protection to require a cash deposit for estimated antidumping duties at the appropriate rate for each manufacturer/producer specified above, for entries of subject merchandise, entered or withdrawn from warehouse, for consumption, on or after June 8, 2012.

This notice of implementation of these section 129 Final Results is published in accordance with section 129(c)(2)(A) of the URAA.

Dated: June 11, 2012.

Paul Piquado,

Assistant Secretary for Import Administration.

[FR Doc. 2012–14734 Filed 6–15–12; 8:45 am]

BILLING CODE P

DEPARTMENT OF COMMERCE

National Oceanic and Atmospheric Administration

Proposed Information Collection; Comment Request; Puget Sound Recreational Shellfish Harvesting Project

AGENCY: National Oceanic and Atmospheric Administration (NOAA).

ACTION: Notice.

SUMMARY: The Department of Commerce, as part of its continuing effort to reduce paperwork and respondent burden, invites the general public and other Federal agencies to take this opportunity to comment on proposed and/or continuing information collections, as required by the Paperwork Reduction Act of 1995.

DATES: Written comments must be submitted on or before August 17, 2012.

ADDRESSES: Direct all written comments to Jennifer Jessup, Departmental Paperwork Clearance Officer, Department of Commerce, Room 6616, 14th and Constitution Avenue NW., Washington, DC 20230 (or via the Internet at *JJessup@doc.gov*).

FOR FURTHER INFORMATION CONTACT: Requests for additional information or copies of the information collection instrument and instructions should be directed to Mark Plummer, (206) 860–3492 or *Mark.Plummer@noaa.gov.*

SUPPLEMENTARY INFORMATION:

I. Abstract

This request is for a new collection of information.

The Puget Sound estuary provides one of the most valuable shellfish habitats in the Pacific Northwest. Shellfish are important economically, ecologically, and socially to the Puget Sound basin. While shellfish bed closures have decreased area-wide, persistent closures continue in certain locations, affecting local growers and restricting commercial and recreational harvest opportunities. The Puget Sound Partnership (Partnership), a Washington State agency established to facilitate the conservation and restoration of Puget Sound, has set a priority to reduce the risks of shellfish growing area closures and adverse effects on human health. The Partnership's Action Agenda, the blueprint for action to restore and protect Puget Sound, has set a goal for a net increase of 10,800 harvestable shellfish acres by 2020.

In support of the Partnership's pursuit of this goal, the Northwest Fisheries Science Center is undertaking an economics research project to assess the behavior of individual shellfish harvesters in response to the opening and closing of individual shellfish beaches for human health reasons, and how these actions affect the value of shellfish harvesting. The Puget Sound Recreational Shellfish Harvesting Project (PSRSHP) will provide critical economic data related to recreational shellfish harvesting. More specifically, the PSRSHP will collect data needed to assess (1) The socioeconomic characteristics of recreational shellfish harvesting participants; (2) The economic value of access to Puget Sound beaches for recreational shellfish harvesting through statistical estimation of models; and (3) the potential changes in these values stemming from possible changes in management policies related to human health that affect the status of particular shellfish harvesting areas.

II. Method of Collection

A sample of shellfish and fishing license holders will be screened with a brief telephone survey, followed by a mail survey where appropriate. Respondents to the telephone survey will submit data by telephone, and respondents to the mail survey will submit data on paper.

III. Data

OMB Control Number: None.

Form Number: None.

Type of Review: Regular submission (new information collection).

Affected Public: Individuals or households.

Estimated Number of Respondents: 1,463.

Estimated Time per Response: 30 minutes for mail respondents who harvested shellfish in Puget Sound; 10 minutes for all other mail respondents; 3 minutes telephone screener.

Estimated Total Annual Burden Hours: 214.

Estimated Total Annual Cost to Public: $0 in recordkeeping/reporting costs.

IV. Request for Comments

Comments are invited on: (a) Whether the proposed collection of information is necessary for the proper performance of the functions of the agency, including whether the information shall have practical utility; (b) the accuracy of the agency's estimate of the burden (including hours and cost) of the proposed collection of information; (c) ways to enhance the quality, utility, and clarity of the information to be collected; and (d) ways to minimize the burden of the collection of information on respondents, including through the use of automated collection techniques or other forms of information technology.

Comments submitted in response to this notice will be summarized and/or included in the request for OMB approval of this information collection; they also will become a matter of public record.

Dated: June 13, 2012.

Gwellnar Banks,

Management Analyst, Office of the Chief Information Officer.

[FR Doc. 2012–14802 Filed 6–15–12; 8:45 am]

BILLING CODE 3510–22–P

DEPARTMENT OF COMMERCE

National Oceanic and Atmospheric Administration

Proposed Information Collection; Comment Request; Socioeconomic Assessment of Gulf of Mexico Fisheries Under the Grouper-Tilefish Individual Fishing Quota (IFQ) Program

AGENCY: National Oceanic and Atmospheric Administration (NOAA), Commerce.

ACTION: Notice.

SUMMARY: The Department of Commerce, as part of its continuing effort to reduce paperwork and respondent burden, invites the general public and other Federal agencies to take this opportunity to comment on proposed and/or continuing information collections, as required by the Paperwork Reduction Act of 1995.

DATES: Written comments must be submitted on or before August 17, 2012.

ADDRESSES: Direct all written comments to Jennifer Jessup, Departmental Paperwork Clearance Officer, Department of Commerce, Room 6616, 14th and Constitution Avenue NW., Washington, DC 20230 (or via the Internet at *JJessup@doc.gov).*

FOR FURTHER INFORMATION CONTACT: Requests for additional information or copies of the information collection instrument and instructions should be directed to Dr. Larry Perruso, (305) 361–4278 or *Larry.perruso@noaa.gov.*

SUPPLEMENTARY INFORMATION:

I. Abstract

This request is for a new information collection.

The National Marine Fisheries Service (NMFS) proposes to collect demographic, cultural, economic and social information about Gulf of Mexico fisheries managed under the Grouper-Tilefish Individual Fishing Quota (IFQ) Program. The survey also intends to inquire about the industry's perceptions, attitudes and beliefs about the performance of the Grouper-Tilefish IFQ Program. The data gathered will be used to describe the social and economic changes brought about by the Grouper-Tilefish IFQ Program, assess the economic performance of the industry under the Grouper-Tilefish IFQ Program, and evaluate the socioeconomic impacts of future federal regulatory actions. In addition, the information will be used to strengthen and improve fishery management decision-making, satisfy legal mandates under Executive Order 12866, the Magnuson-Stevens Fishery Conservation and Management Act (U.S.C. 1801 et seq.), the Regulatory Flexibility Act, the Endangered Species Act, and the National Environmental Policy Act, and other pertinent statues.

II. Method of Collection

The socioeconomic information sought will be collected via in-person surveys.

III. Data

OMB Control Number: None.

Form Number: None.

Type of Review: Regular submission (request for a new information collection).

Affected Public: Business or other for-profit organizations.

Estimated Number of Respondents: 120.

Estimated Time per Response: 2 hrs.

Estimated Total Annual Burden Hours: 240.

Estimated Total Annual Cost to Public: $0.

IV. Request for Comments

Comments are invited on: (a) Whether the proposed collection of information is necessary for the proper performance of the functions of the agency, including whether the information shall have practical utility; (b) the accuracy of the agency's estimate of the burden (including hours and cost) of the proposed collection of information; (c) ways to enhance the quality, utility, and clarity of the information to be collected; and (d) ways to minimize the burden of the collection of information on respondents, including through the use of automated collection techniques or other forms of information technology.

Comments submitted in response to this notice will be summarized and/or included in the request for OMB approval of this information collection; they also will become a matter of public record.

Dated: June 13, 2012.

Gwellnar Banks,

Management Analyst, Office of the Chief Information Officer.

[FR Doc. 2012–14770 Filed 6–15–12; 8:45 am]

BILLING CODE 3510–22–P

CORPORATION FOR NATIONAL AND COMMUNITY SERVICE

Information Collection; Submission for OMB Review, Comment Request

AGENCY: Corporation for National and Community Service.

ACTION: Notice.

SUMMARY: The Corporation for National and Community Service (CNCS) has submitted a public information collection request (ICR) entitled Senior Corps Performance Measurement Surveys Parts A, B, and C for review and approval in accordance with the Paperwork Reduction Act of 1995, Public Law 104–13, (44 U.S.C. Chapter 35). Copies of this ICR, with applicable supporting documentation, may be obtained by calling the Corporation for National and Community Service, Angela Roberts, at (202) 606–6822 or email to *aroberts@cns.gov.* Individuals who use a telecommunications device for the deaf (TTY–TDD) may call 1–800–833–3722 between 8:00 a.m. and 8:00 p.m. Eastern Time, Monday through Friday.

ADDRESSES: Comments may be submitted, identified by the title of the information collection activity, to the Office of Information and Regulatory Affairs, Attn: Ms. Sharon Mar, OMB Desk Officer for the Corporation for National and Community Service, by any of the following two methods within 30 days from the date of publication in the **Federal Register**:

(1) *By fax to:* (202) 395–6974, Attention: Ms. Sharon Mar, OMB Desk Officer for the Corporation for National and Community Service; and

(2) *Electronically by email to: smar@omb.eop.gov.*

SUPPLEMENTARY INFORMATION: The OMB is particularly interested in comments which:

- Evaluate whether the proposed collection of information is necessary for the proper performance of the functions of CNCS, including whether the information will have practical utility;
- Evaluate the accuracy of the agency's estimate of the burden of the proposed collection of information, including the validity of the methodology and assumptions used;
- Propose ways to enhance the quality, utility, and clarity of the information to be collected; and
- Propose ways to minimize the burden of the collection of information on those who are to respond, including through the use of appropriate automated, electronic, mechanical, or other technological collection techniques or other forms of information technology, e.g., permitting electronic submissions of responses.

Comments

The 60-day Notice soliciting comments was published on Thursday, December 8, 2011 on page 76697. A total of 278 comments were received from 87 commenters. Most individuals providing comments submitted more than one comment each. The commenters represented all three Senior Corps programs in the following proportions: 65 Individuals, or 75 percent from RSVP; 2 individuals, or 2 percent from the Foster Grandparent Program; 2 individuals or percent from the Senior Companion Program; 12 individuals, or 15 percent had no program identified; and the remaining 6 individuals, or 6 percent represented a combination of programs. In all cases, the majority of comments were from RSVP, which accounted for a total of 237 comments, or 85 percent of the total comments. Comments were broken out into eleven discrete categories, as follows:

(1) The survey is partially or entirely unnecessary: 33 comments or 11 percent of the total. Of the 33 comments, 30 or 91 percent were from RSVP.

(2) The survey is duplicative of a tool or process already used by respondents: 17 comments or 6 percent of the total. Of the 17 comments, 13 comments or 76 percent were from RSVP.

(3) The survey places a particularly high burden on RSVP program grantees: 23 comments, or 8 percent of the total. Of the 23 comments, 100 percent were from RSVP.

(4) The survey is too long, and contains too many questions: 19 comments, or 6 percent of the total. Of the 19 comments, 17 or 89 percent were from RSVP.

(5) The survey is partially or entirely irrelevant: 20 comments, or 7 percent of the total. Of the 20 comments, 17 or 85 percent were from RSVP.

(6) The survey represents too great a time burden: 40 comments or 14 percent of the total. Of the 40 comments, 72 percent were from RSVP.

(7) The survey should be conducted as a sample, rather than the proposed census: 15 comments or 5 percent of the total. Of the 15 comments, 14 or 93 percent were from RSVP.

(8) The survey is too costly: 47 comments or 16 percent of the total. Of the 47, 41 comments or 87 percent were from RSVP.

(9) The survey contains invasive questions that would be perceived as encroaching on the privacy of the respondents: 29 comments or 10 percent of the total. Of the 29 comments, 24 or 83 percent were from RSVP.

(10) The program model makes it difficult to reach the clients in order to conduct the survey: 32 comments or 12 percent of the comments. Of the 32 comments, 29 or 91 percent were from RSVP. The Senior Companion Program grantees did not raise this as a core issue, and the model supports access to the assigned clients and volunteers.

(11) The condition of clients, such as Alzheimer's Disease or dementia, would make it difficult to survey some number of clients: 3 comments or 1 percent of the total. All three of the comments were from representatives of the Foster Grandparent or Senior Companion programs.

In summary, 85 percent of the comments were submitted by individuals representing the RSVP program. The comments from RSVP reflected concerns in every category, with particularly emphasis on time burden, cost, and direct client contact due to the program model.

CNCS concurs that, due to the scope, magnitude, and decentralized volunteer placement structure of RSVP, the survey is less aligned with RSVP than with the Foster Grandparent and Senior Companion programs.

Based on the comments received, CNCS will exempt RSVP grantees from a mandatory requirement to use the survey as a means to collect client performance data and volunteer benefit data. CNCS will offer RSVP the opportunity to participate solely on a voluntary basis. CNCS believes that this exemption addresses the concerns of the majority of commenters. The survey will be required of Foster Grandparent and Senior Companion program grantees.

CNCS will make the following modifications in response to the comments:

(1) The survey is partially or entirely unnecessary: 33 comments or 11 percent of the total. Of the 33 comments, 30 or 91 percent were from RSVP. Response: CNCS believes the survey will yield significant data in the FGP and SCP programs. RSVP grantees will not be required to participate.

(2) The survey is duplicative of a tool or process already used by respondents: 17 comments or 6 percent of the total. Of the 17 comments, 13 comments or 76 percent were from RSVP. Response: CNCS believes the survey will provide new data to demonstrate national outcome data in the FGP and SCP programs. RSVP grantees will not be required to participate.

(3) The survey places a particularly high burden on RSVP program grantees: 23 comments, or 8 percent of the total. Of the 23 comments, 100 percent were from RSVP. Response: Due to the scope and decentralized placement of RSVP volunteers, CNCS concurs and will exempt RSVP from required participation in the survey.

(4) The survey is too long, and contains too many questions: 19 comments, or 6 percent of the total. Of the 19 comments, 17 or 89 percent were from RSVP. Response: CNCS modified the survey tools by dividing one consolidated tool into three separate instruments. The Independent Living Surveys—comprising one instrument for clients (primarily frail seniors) served by Senior Companions and one instrument for caregivers of clients served by Senior Companions, were restructured to contain a total of ten questions each. The survey is formatted for ease of use, with the client or surrogate circling the correct response to each question. The Benefits to the Volunteer Survey is now a separate instrument in a similar format. Additionally, the Benefits to the Volunteer Survey frequency of use was changed from annual to one-time. The Independent Living Surveys will remain annual.

(5) The survey is partially or entirely irrelevant: 20 comments, or 7 percent of the total. Of the 20 comments, 17 or 85 percent were from RSVP. Response: CNCS believes the data to be collected through the survey is relevant to both the volunteer experience and the outcomes to clients and caregivers

receiving respite. RSVP will not be required to participate in the survey.

(6) The survey represents too great a time burden: 40 comments or 14 percent of the total. Of the 40 comments, 72 percent were from RSVP. Response: comments about the length of the survey, CNCS reformat the survey into individual instruments that each focus on one discrete dimension of performance.

(7) The survey should be conducted as a sample, rather than the proposed census: 15 comments or 5 percent of the total. Of the 15 comments, 14 or 93 percent were from RSVP. Response: The method original envisioned is that all clients and caregivers receiving independent living support and/or respite, and all volunteers would participate. While RSVP will not be required to participate in the survey, there may be some opportunity to engage in a separate evaluation-focused activity that would use a sampling model.

(8) The survey is too costly: 47 comments or 16 percent of the total. Of the 47, 41 comments or 87 percent were from RSVP. Response: CNCS determined that RSVP would be exempt from participating in the survey process.

(9) The survey contains invasive questions that would be perceived as encroaching on the privacy of the respondents: 29 comments or 10 percent of the total. Of the 29 comments, 24 or 83 percent were from RSVP. Response: CNCS will eliminate or de-identify the data received so that individual responses cannot be linked back to specific respondents.

(10) The program model makes it difficult to reach the clients in order to conduct the survey: 32 comments or 12 percent of the comments. Of the 32 comments, 29 or 91 percent were from RSVP. The Senior Companion Program grantees did not raise this as a core issue, and the model supports access to the assigned clients and volunteers. Response: CNCS will not require RSVP grantees to participate in the survey.

(11) The condition of clients, such as Alzheimer's Disease or dementia, would make it difficult to survey some number of clients: 3 comments or 1 percent of the total. All three of the comments were from representatives of the Foster Grandparent or Senior Companion programs. Response: CNCS will incorporate alternative protocols or methods, such as observation, to collect survey data.

Description: CNCS is seeking approval of the Senior Corps Performance Measures Surveys that are used by Foster Grandparent and Senior Companion Program grantees (required) and by RSVP grantees (voluntary/optional) to collect performance data related to independent living and benefits to the volunteers who serve.

Type of Review: New.

Agency: Corporation for National and Community Service.

Title: Senior Corps Performance Measures Surveys.

OMB Number: None.

Agency Number: None.

Affected Public: Clients served by Senior Companions, caregivers served by Senior Companions, Foster Grandparent and Senior Companion volunteers.

Total Respondents:

Independent Living Surveys for Clients and Caregivers: 74,000.

Benefits to Volunteer Survey: 46,000.

Frequency: Independent Living Surveys for Clients and Caregivers: Annual.

Benefits to the Volunteer Survey: One-time.

Average Time per Response:

Independent Living Surveys for Clients and Volunteers: 30 minutes per survey.

Benefits to Volunteer Survey: 30 minutes per survey.

Estimated Total Burden Hours: 60,000 hours.

Total Burden Cost (capital/startup): None.

Total Burden Cost (operating/maintenance): None.

Dated: June 12, 2012.

Erwin J. Tan,

Director, Senior Corps.

[FR Doc. 2012–14819 Filed 6–15–12; 8:45 am]

BILLING CODE 6050–$$–P

DEPARTMENT OF EDUCATION

Notice of Proposed Information Collection Requests; Office of Postsecondary Education; Higher Education Opportunity Act (HEOA) Title II Reporting Forms on Teacher Quality and Preparation

SUMMARY: The Higher Education Opportunity Act of 2008 calls for annual reports from states and institutions of higher education (IHEs) on the quality of teacher preparation and state teacher certification and licensure (Pub. L. 110–315, sections 205–208). The purpose of the reports is to provide greater accountability in the preparation of the nation's teaching forces and to provide information and incentives for its improvement.

DATES: Interested persons are invited to submit comments on or before August 17, 2012.

ADDRESSES: Written comments regarding burden and/or the collection activity requirements should be electronically mailed to *ICDocketMgr@ed.gov* or mailed to U.S. Department of Education, 400 Maryland Avenue SW., LBJ, Washington, DC 20202–4537. Copies of the proposed information collection request may be accessed from *http://edicsweb.ed.gov,* by selecting the ''Browse Pending Collections'' link and by clicking on link number 04871. When you access the information collection, click on ''Download Attachments'' to view. Written requests for information should be addressed to U.S. Department of Education, 400 Maryland Avenue SW., LBJ, Washington, DC 20202–4537. Requests may also be electronically mailed to *ICDocketMgr@ed.gov* or faxed to 202–401–0920. Please specify the complete title of the information collection and OMB Control Number when making your request.

Individuals who use a telecommunications device for the deaf (TDD) may call the Federal Information Relay Service (FIRS) at 1–800–877–8339.

SUPPLEMENTARY INFORMATION: Section 3506 of the Paperwork Reduction Act of 1995 (44 U.S.C. Chapter 35) requires that Federal agencies provide interested parties an early opportunity to comment on information collection requests. The Director, Information Collection Clearance Division, Privacy, Information and Records Management Services, Office of Management, publishes this notice containing proposed information collection requests at the beginning of the Departmental review of the information collection. The Department of Education is especially interested in public comment addressing the following issues: (1) Is this collection necessary to the proper functions of the Department; (2) will this information be processed and used in a timely manner; (3) is the estimate of burden accurate; (4) how might the Department enhance the quality, utility, and clarity of the information to be collected; and (5) how might the Department minimize the burden of this collection on the respondents, including through the use of information technology. Please note that written comments received in response to this notice will be considered public records.

Title of Collection: Higher Education Opportunity Act (HEOA) Title II Reporting Forms on Teacher Quality and Preparation.

OMB Control Number: 1840–0744.

Type of Review: Revision.

Total Estimated Number of Annual Responses: 1,309.

Total Estimated Number of Annual Burden Hours: 235,961.

Abstract: The Higher Education Opportunity Act of 2008 calls for annual reports from states and institutions of higher education (IHEs) on the quality of teacher preparation and state teacher certification and licensure (Pub. L. 110–315, sections 205–208). The purpose of the reports is to provide greater accountability in the preparation of the nation's teaching forces and to provide information and incentives for its improvement. IHEs that have teacher preparation programs must report annually to their states on the performance of their program completers on teacher certification or licensure tests. States, in turn, must report test performance information, institution by institution, to the Secretary of Education. They must also report on their requirements for teacher certification and licensure, state standards, alternative routes to certification, low performing teacher preparation programs and related items.

Dated: June 13, 2012.

Darrin A. King,

Director, Information Collection Clearance Division, Privacy, Information and Records Management Services, Office of Management.

[FR Doc. 2012–14809 Filed 6–15–12; 8:45 am]

BILLING CODE 4000–01–P

DEPARTMENT OF EDUCATION

Applications for New Awards; Personnel Development To Improve Services and Results for Children With Disabilities—Early Childhood Personnel Center

AGENCY: Office of Special Education and Rehabilitative Services, Department of Education.

ACTION: Notice.

Overview Information:

Personnel Development to Improve Services and Results for Children with Disabilities—Early Childhood Personnel Center.

Notice inviting applications for new awards for fiscal year (FY) 2012.

Catalog of Federal Domestic Assistance (CFDA) Number: 84.325B.

DATES:

Applications Available: June 18, 2012.

Deadline for Transmittal of Applications: July 18, 2012.

Full Text of Announcement

I. Funding Opportunity Description

Purpose of Program: The purposes of this program are to (1) help address State-identified needs for highly qualified personnel in special education, related services, early intervention, and regular education to work with infants, toddlers, and children with disabilities; and (2) ensure that those personnel have the necessary skills and knowledge, derived from practices that have been determined through scientifically based research and experience, to be successful in serving those children.

Priority: In accordance with 34 CFR 75.105(b)(2)(iv), this priority is from allowable activities specified in the statute (see sections 662 and 681 of the Individuals with Disabilities Education Act (IDEA)).

Absolute Priority: For FY 2012 and any subsequent year in which we make awards from the list of unfunded applicants from this competition, this priority is an absolute priority. Under 34 CFR 75.105(c)(3), we consider only applications that meet this priority.

This priority is:

Early Childhood Personnel Center.

Background:

The majority of professionals who make up the current early childhood workforce are not adequately prepared to provide effective services and evidence-based interventions that lead to improved developmental and learning outcomes for infants, toddlers, and preschool children with disabilities and their families (National Governor's Association, 2010). In a survey of IDEA Part C and Part B, Section 619 coordinators, more than half of the States reporting indicated that personnel currently employed in early intervention and preschool programs were not properly trained to work with infants, toddlers, and preschool children with disabilities and their families (Bruder, 2010). The Division for Early Childhood of the Council for Exceptional Children (DEC) and the National Association for the Education of Young Children (NAEYC) each has a set of early childhood personnel standards [1] for personnel working with infants, toddlers, and preschool children and their families. The majority of States' personnel standards, however, do not align to these national standards (Stayton et al., 2009).

To address the needs of States in this critical area, the Department plans to support, through this priority, the establishment and operation of an Early Childhood Personnel Center to improve professional development for personnel working with infants, toddlers, and preschool children with disabilities and their families, including those working in IDEA Part C and Part B preschool programs. This Center would support States in developing and implementing an integrated early childhood professional development system so that all personnel providing services to infants, toddlers, and preschool children with disabilities and their families can effectively serve those populations.

''Integrated early childhood professional development system'' refers to a comprehensive system of preparation and ongoing development and support for early childhood personnel. Components of a statewide integrated early childhood professional development system include licensing and certification requirements, personnel standards and competencies,[2] preservice preparation, inservice training, and career pathways. Integrated systems cross all early childhood sectors (e.g., IDEA Part C, IDEA Part B preschool, Head Start, child care, State-funded Pre-K) (LeMoine, 2008; National Professional Development Center on Inclusion (NPDCI), 2010).

The Department's Race to the Top—Early Learning Challenge (RTT–ELC) program recognizes the importance of having an integrated early childhood professional development system to support the development and learning of all young children. Thus, RTT–ELC encourages States to work closely with institutions of higher education (IHEs) to develop a common, statewide workforce knowledge and competency framework [3] for all early childhood

[1] For the purpose of this priority, ''personnel standards'' refers to a set of expectations or benchmarks conveyed as broad domains with associated core knowledge and skills organized into levels of expertise. Broad domains include promoting child development and learning, and core knowledge and skills involve knowing evidence-based practices validated for specific characteristics of learners and settings (National Professional Development Center on Inclusion (NPDCI), 2011).

[2] For the purpose of this priority, ''competencies'' refers to the knowledge, skills, and dispositions providers must master to be effective (NPDCI, 2011).

[3] For the purpose of this priority, ''workforce knowledge and competency framework'' means a set of expectations that describes what early childhood educators (including those working with children with disabilities and English learners) should know and be able to do. The Workforce Knowledge and Competency Framework, at a minimum, (a) is evidence based; (b) incorporates knowledge and application of the State's early learning and development standards, the comprehensive assessment systems, child development, health, and culturally and linguistically appropriate strategies for working with families; (c) includes knowledge of early mathematics and literacy development and effective instructional practices to support mathematics and literacy development in young children; (d) incorporates effective use of data to guide

educators.[4] RTT–ELC also encourages States to improve the quality of these personnel by supporting professional development, career advancement opportunities, differentiated compensation, and incentives to improve their knowledge, skills, and abilities.

Notwithstanding the work currently being done under the RTT–ELC program, and while early childhood programs within States are moving toward more integrated early childhood professional development systems, States need assistance to develop, implement, and improve personnel systems that are focused on providing services to infants, toddlers and preschool children with disabilities and their families. Across States, there are wide variations in the quality of implementation of the components of these systems, the alignment of these components to create a comprehensive professional development system, and the integration of IDEA Part C and IDEA Part B preschool professional development systems with other early childhood professional development systems (NPDCI, 2011). Thus, States, including those funded under RTT–ELC, specifically need assistance in: aligning their personnel standards to national professional organization standards for providing services to infants, toddlers, and preschool children with disabilities and their families; ensuring that those standards are aligned or integrated with State standards for early childhood personnel of all children, linking those standards to applicable State competencies and certification or licensure requirements to ensure that all early childhood personnel are qualified to work with infants, toddlers, and preschool children, including those with disabilities and their families; developing collaborative relationships with IHEs to support alignment between preservice and inservice training and the increased use of evidence-based professional development practices to improve services for infants, toddlers, and preschool children with disabilities; and ensuring that States include personnel serving infants, toddlers, and preschool children with disabilities and their families in their career pathway initiatives (e.g., workforce registries, career ladders, and incentive programs). The proposed Early Childhood Personnel Center would provide technical assistance (TA) to address State needs in these areas.

Priority:

The purpose of this priority is to fund a cooperative agreement to support the establishment and operation of an Early Childhood Personnel Center (Center) to: (1) Serve as a national resource on personnel standards, competencies, and recommended practices for professional development for personnel providing services to infants, toddlers, and preschool children with disabilities and their families; (2) assist States in aligning their personnel standards to national professional organization standards for all personnel providing services to infants, toddlers, and preschool children with disabilities and their families, aligning or integrating those standards with standards for early childhood personnel of all children, and linking those standards to State competencies and certification or licensure requirements; (3) assist State agencies and IHEs in developing partnerships with each other to support alignment between preservice and inservice training for all personnel providing services to infants, toddlers and preschool children with disabilities and their families; and (4) in alignment with the vision outlined in RTT–ELC, assist States in developing integrated early childhood professional development systems to ensure that IDEA Part C and Part B preschool programs and personnel in each State are included within the State's professional development initiatives and that all early childhood personnel have the competencies to effectively serve infants, toddlers, and preschool children with disabilities and their families.

To be considered for funding under this absolute priority, applicants must meet the application requirements contained in this priority. Any project funded under this absolute priority also must meet the programmatic and administrative requirements specified in the priority.

Application Requirements. An applicant must include in its application—

(a) A logic model that depicts, at a minimum, the goals, activities, outputs, and outcomes of the proposed project. A logic model communicates how a project will achieve its outcomes and provides a framework for both the formative and summative evaluations of the project;

Note: The following Web sites provide more information on logic models: *www.researchutilization.org/matrix/logicmodel_resource3c.html* and *www.tadnet.org/model_and_performance.*

(b) A plan to implement the activities described in the *Project Activities* section of this priority;

(c) A plan, linked to the proposed project's logic model, for a formative evaluation of the proposed project's activities that is linked to the proposed project's logic model. The plan must describe how the formative evaluation will use clear performance objectives to ensure continuous improvement in the operation of the proposed project, including objective measures of progress in implementing the project and ensuring the quality of products and services. This plan must include how the Center will collect data on all components of the Center's activities;

(d) A budget for a summative evaluation to be conducted by an independent third party, who must be approved by OSEP;

(e) A budget that dedicates $50,000 in year one of the project to cover the costs of carrying out the task described in paragraph (b) of the *Knowledge Development Activities* section of this priority.

(f) A budget for attendance at the following:

(1) A two-day kick-off meeting to be held in Washington, DC, after receipt of the award, and an annual planning meeting held in Washington, DC, with the OSEP Project Officer during each subsequent year of the project period.

Note: Within 30 days of receipt of the award, a post-award teleconference must be held between the OSEP Project Officer and the grantee's Project Director or other authorized representative;

(2) A three-day Project Directors' Conference in Washington, DC, during each year of the project period;

(3) A three-day Leveraging Resources conference in Washington, DC, during each year of the project period;

(4) Two two-day trips annually to attend Department briefings, Department-sponsored conferences, and other meetings, as requested by OSEP; and

(g) A line item in the proposed budget for an annual set-aside of five percent of the grant amount to support emerging

instruction and program improvement; (e) includes effective behavior management strategies that promote positive social emotional development and reduce challenging behaviors; and (f) incorporates feedback from experts at the State's postsecondary institutions and other early learning and development experts and early childhood educators.

[4] As defined in RTT–ELC, ''early childhood educator'' means any professional working in an early learning and development program, including but not limited to, center-based and family child care providers; infant and toddler specialists; early intervention specialists and early childhood special educators; home visitors; related services providers; administrators such as directors, supervisors, and other early learning and development leaders; Head Start teachers; Early Head Start teachers; preschool and other teachers; teacher assistants; family service staff; and health coordinators.

needs that are consistent with the proposed project's activities, as those needs are identified in consultation with OSEP.

Note: With approval from the OSEP Project Officer, the Center must reallocate any remaining funds from this annual set-aside no later than the end of the third quarter of each budget period.

Project Activities. To meet the requirements of this priority, the Center, at a minimum, must conduct the following activities:

Knowledge Development Activities.

(a) In the first six months of the project period, identify and document the current status of each State in regards to:

(1) The State's IDEA Part C and Part B preschool personnel standards and competencies, as well as certification or licensure requirements;

(2) How IDEA Part C and Part B preschool programs in the State and personnel working in the programs are integrated into the State's early childhood professional development systems and initiatives; and

(3) The State's efforts to develop personnel standards and competencies for serving infants, toddlers, and preschool children with disabilities for personnel working in early childhood programs other than IDEA Part C and Part B preschool programs (e.g., Early Head Start, Head Start, Child Care).

(b) In the first year of the project period, collaborate with the DEC and the Early Childhood Technical Assistance Center, if funded by OSEP, to update the set of empirically supported recommendations for professional development practices for personnel providing services to infants, toddlers, and preschool children with disabilities and their families in both preservice and inservice contexts. These recommendations must be made available at no cost to consumers as part of the *Technical Assistance and Dissemination Activities* described below.

(c) In the first year of the project period, bring together national professional organizations to facilitate the development of a set of recommended unified personnel standards that could be used across States and IHEs preparing personnel to serve infants, toddlers, and preschool children with disabilities and their families.

(d) In the first year of the project period, conduct a review of the literature on components of successful:

(1) Models of State agency and IHE partnerships that have led to the alignment of State personnel standards and competencies and the curricula at IHEs; and the alignment of preservice and inservice training.

(2) Models of coordination at a systems level to promote a more integrated early childhood professional development system for personnel working with infants, toddlers, and preschool children with disabilities and their families.

The standards for the literature review must be consistent with those used by the What Works Clearinghouse and the definitions of ''strong evidence'' and ''moderate evidence'' contained in the notice of final supplemental priorities and definitions for discretionary grants programs, published in the **Federal Register** on December 15, 2010 (75 FR 78486), and corrected on May 12, 2011 (76 FR 27637).

Technical Assistance and Dissemination Activities.

(a) Provide a continuum of TA and dissemination activities to improve and integrate early childhood professional development systems with one another so that early childhood personnel have the competencies to support the learning and development of infants, toddlers, and preschool children with disabilities and their families and ensure that TA activities are coordinated with, and not duplicative of, State activities carried out under the RTT–ELC. This TA must include—

(1) General TA to States, early childhood programs, early childhood personnel, IHEs, faculty, professional development providers, and other relevant stakeholders. At a minimum, the Center must conduct the following activities:

(i) Develop and disseminate reports, products, and other materials at no cost to consumers that include:

(A) Information on personnel standards and competencies, as well as certification or licensure requirements, and early childhood professional development systems in each State, including a description of each State's efforts to ensure and enhance the quality of early childhood personnel working with infants, toddlers, and preschool children with disabilities and their families.

(B) Current recommendations for effective professional development practices in preservice and inservice contexts to support personnel in developing the competencies to provide effective services and evidence-based interventions for infants, toddlers, and preschool children with disabilities and their families.

(C) Strategies for developing State agency and IHE partnerships to develop an integrated and comprehensive early childhood professional development system that addresses the needs of personnel working with infants, toddlers, and preschool children with disabilities and their families.

(ii) Maintain a Web site that meets government or industry-recognized standards for accessibility and that links to the Web site operated by the Technical Assistance Coordination Center (TACC);

(2) Targeted TA to States and IHEs to ensure that early childhood personnel have the competencies to serve infants, toddlers, and preschool children with disabilities and their families. At minimum, the Center must conduct the following activities:

(i) Provide a forum for States to collaborate through learning communities, communities of practice, national calls, webinars, or other mechanisms to learn about personnel standards and competencies for personnel working with infants, toddlers, and preschool children with disabilities and their families and how to use current recommended practices in professional development activities.

(ii) Provide a forum for IHEs to collaborate through learning communities, communities of practice, national calls, webinars, or other mechanisms to learn how to align their programs to State personnel standards and competencies for personnel working with infants, toddlers, and preschool children with disabilities and their families and how to use current recommended practices in professional development activities.

(iii) Plan and implement activities, which could include webinars, meetings, video conferences, and Web sites to support States and IHEs forming and sustaining partnerships to support alignment between preservice and inservice training for personnel working with infants, toddlers, and preschool children with disabilities and their families.

(iv) Assist States, including States awarded grants through RTT–ELC, in their efforts to include IDEA Part C and Part B preschool programs and providers in their integrated early childhood professional development systems and initiatives; and

(3) Intensive TA to a minimum of eight States to enhance their IDEA Part C and Part B preschool professional development systems and to support the development of integrated comprehensive early childhood professional development systems to ensure that all personnel have the competencies to effectively serve infants, toddlers, and preschool children with disabilities and their

families. At a minimum, the Center must conduct the following activities:

(i) Assist the States receiving intensive TA under paragraph (a)(3) of this section to align their personnel standards for personnel working with infants, toddlers, and preschool children with disabilities and their families with a set of recommended unified national professional organization personnel standards, align or integrate those standards with standards for early childhood personnel of all children, and link their State standards to competencies and certification or licensure requirements in their IDEA Part C and Part B programs.

(ii) Assist the States receiving intensive TA under this section and IHEs in those States in developing partnerships to ensure that preservice preparation programs in early intervention and early childhood special education are aligned to State personnel standards and competencies, that inservice training builds on preservice preparation in early intervention and special education, and that recommended practices for professional development are included in both preservice and inservice programs.

(iii) Assist the States receiving intensive TA under this section in developing an integrated professional development system applicable to personnel in all programs serving infants, toddlers, and preschool children with disabilities and their families to ensure that—

(A) Workforce knowledge and competency frameworks and personnel standards within the State include competencies needed to work with infants, toddlers, and preschool children with disabilities and their families;

(B) Professional development opportunities in a State are available and provided across all early childhood programs that serve children with disabilities and include professional development on serving infants and toddlers with disabilities and their families in natural environments, and preschool children with disabilities in inclusive settings; and

(C) IDEA Part C and Part B preschool programs and providers are considered and included when developing and implementing personnel initiatives in the State.

(b) Develop a plan for identifying and selecting the States with which the Center will work under paragraph (a)(3) of this section. Factors for selecting States for consideration could include the State's early childhood priorities and initiatives; receipt of an RTT–ELC grant; the commitment of the State's multiple early childhood programs to participate in the TA to support the professional development of all personnel who serve infants, toddlers, and preschool children with disabilities and their families; the commitment of the State's IHEs, including community colleges to participate in the TA; the commitment of the early intervention and community-based early childhood programs in high-need local educational agencies (LEAs) [5] in the State to participate in the TA; and the demographic and geographic characteristics of each State, including the percentage of high-need children with disabilities [6] and their families. The Center must obtain approval from OSEP on the final selection of States.

(c) In consultation with the OSEP Project Officer, make selected reports, documents, and other materials available in both English and Spanish.

Leadership and Coordination Activities.

(a) Consult with a group of persons, including representatives from State and local educational agencies, including representatives from IDEA Part C and Part B preschool programs; State level representatives from other early child systems (e.g., State Child Care Administrators and Head Start Collaboration Directors); early childhood personnel; parents of infants, toddlers, or preschool children with disabilities; faculty in personnel preparation; and researchers, as appropriate, on the activities and outcomes of the Center and solicit programmatic support and advice from various participants in the group, as appropriate. The Center may convene meetings, whether in person, by phone, or other means, for this purpose, or may consult with group participants individually. The Center must identify the members of the group to OSEP within eight weeks after receipt of the award.

(b) Communicate and collaborate, on an ongoing basis, with OSEP-funded projects, including the TACC and other early childhood-focused centers, as appropriate, as well as other U.S. Department of Education and U.S. Department of Health and Human Services-funded early childhood-focused centers, as appropriate. This collaboration could include the joint development of products, the coordination of TA services, and the planning and carrying out of TA meetings and events.

(c) Participate in national initiatives related to early childhood professional development systems.

(d) Prior to developing any new product, submit a proposal for the product to the TACC database for approval from the OSEP Project Officer. The development of new products should be consistent with the product definition and guidelines posted on the TACC Web site (*www.tadnet.org*).

(e) Contribute, on an ongoing basis, updated information on the Center's approved and finalized products and services to a database at TACC.

(f) Maintain ongoing communication with the OSEP Project Officer through monthly phone conversations and email communication.

Fourth and Fifth Years of Project:

In deciding whether to continue funding the Center for the fourth and fifth years, the Secretary will consider the requirements of 34 CFR 75.253(a) and in addition—

(a) The recommendation of a review team consisting of experts selected by the Secretary. This review will be conducted during a one-day intensive meeting in Washington, DC, during the last half of the project's second year. The Center must budget for travel expenses associated with this one-day intensive review;

(b) The timeliness and effectiveness with which all requirements of the negotiated cooperative agreement have been or are being met by the Center; and

(c) The quality, relevance, and usefulness of the Center's activities and the degree to which the Center's activities have contributed to changed practices and improved early childhood professional development systems to improve outcomes for infants, toddlers, and preschool children with disabilities and their families.

References:

Bruder, M.B. (2010). Early childhood intervention: A promise to children and families for their future. *Exceptional Children, 76*(3), 339–355.

LeMoine, S. (2008). *Workforce Designs: A policy blueprint for state early childhood professional development systems.* Washington, DC: National Association for the Education of Young Children.

National Governor's Association (NGA),

[5] For the purpose of this priority, the term ''high-need local educational agency'' (LEA) means an LEA (a) that serves not fewer than 10,000 children from families with incomes below the poverty line; or (b) for which not less than 20 percent of the children served by the LEA are from families with incomes below the poverty line.

[6] For the purpose of this priority, ''high-need children with disabilities'' refers to children (ages birth through 5) who are eligible for services under IDEA, and who may be further disadvantaged and at risk of educational failure because they: (1) Are living in poverty, (2) are homeless, (3) are in foster care, (4) are English learners, (5) are new immigrants, or (6) are migrant.

Center for Best Practices. (2010). Issue Brief: *Building an Early Childhood Professional Development System.* Available from: *www.nga.org/files/live/sites/NGA/files/pdf/1002EARLYCHILDPROFDEV.PDF.*

National Professional Development Center on Inclusion (NPDCI). (2010). *Building integrated professional development systems in early childhood: Recommendations for states.* Chapel Hill, NC: The University of North Carolina, FPG Child Development Institute.

National Professional Development Center on Inclusion (NPDCI). (2011). *Competencies for early childhood educators in the context of inclusion: Issues and guidance for states.* Chapel Hill, NC: The University of North Carolina, FPG Child Development Institute.

Stayton, V.D., Dietrich, S.L., Smith, B.J., Bruder, M.B., Mogro-Wilson, C., & Swigart, A. (2009). State certification requirements for early childhood special educators. *Infants and Young Children,* 22(1), 4–12.

Waiver of Proposed Rulemaking: Under the Administrative Procedure Act (APA) (5 U.S.C. 553) the Department generally offers interested parties the opportunity to comment on proposed priorities and requirements. Section 681(d) of IDEA, however, makes the public comment requirements of the APA inapplicable to the priorities in this notice.

Program Authority: 20 U.S.C. 1462 and 1481.

Applicable Regulations: (a) The Education Department General Administrative Regulations (EDGAR) in 34 CFR parts 74, 75, 77, 79, 80, 81, 82, 84, 86, 97, 98, and 99. (b) The Education Department debarment and suspension regulations in 2 CFR part 3485. (c) The regulations for this program in 34 CFR part 304.

Note: The regulations in 34 CFR part 79 apply to all applicants except federally recognized Indian tribes.

Note: The regulations in 34 CFR part 86 apply to IHEs only.

II. Award Information

Type of Award: Discretionary grants.

Estimated Available Funds: $1,200,000.

Contingent upon the availability of funds and the quality of applications, we may make additional awards in FY 2013 from the list of unfunded applicants from this competition.

Maximum Award: We will reject any application that proposes a budget exceeding $1,200,000 for a single budget period of 12 months. The Assistant Secretary for Special Education and Rehabilitative Services may change the maximum amount through a notice published in the **Federal Register**.

Estimated Number of Awards: 1.

Note: The Department is not bound by any estimates in this notice.

Project Period: Up to 36 months with an optional additional 24 months based on performance. Applications must include plans for both the 36 month award and the 24 month extension.

III. Eligibility Information

1. *Eligible Applicants:* State educational agencies and State lead agencies; LEAs, including public charter schools that are considered LEAs under State law; IHEs; other public agencies; private nonprofit organizations; outlying areas; freely associated States; Indian tribes or tribal organizations; and for-profit organizations.

2. *Cost Sharing or Matching:* This program does not require cost sharing or matching.

3. *Other: General Requirements*—(a) The projects funded under this program must make positive efforts to employ and advance in employment qualified individuals with disabilities (see section 606 of IDEA).

(b) Each applicant and grant recipient funded under this program must involve individuals with disabilities or parents of individuals with disabilities ages birth through 26 in planning, implementing, and evaluating the project (see section 682(a)(1)(A) of IDEA).

IV. Application and Submission Information

1. *Address to Request Application Package:* You can obtain an application package via the Internet, from the Education Publications Center (ED Pubs), or from the program office.

To obtain a copy via the Internet, use the following address: *www.ed.gov/fund/grant/apply/grantapps/index.html.*

To obtain a copy from ED Pubs, write, fax, or call the following: ED Pubs, U.S. Department of Education, P.O. Box 22207, Alexandria, VA 22304. Telephone, toll free: 1–877–433–7827. FAX: (703) 605–6794. If you use a telecommunications device for the deaf (TDD) or a text telephone (TTY), call, toll free: 1–877–576–7734.

You can contact ED Pubs at its Web site, also: *www.EDPubs.gov* or at its email address: *edpubs@inet.ed.gov.*

If you request an application from ED Pubs, be sure to identify this competition as follows: CFDA number 84.325B.

To obtain a copy from the program office, contact the person listed under **FOR FURTHER INFORMATION CONTACT** in section VII of this notice.

Individuals with disabilities can obtain a copy of the application package in an accessible format (e.g., braille, large print, audiotape, or compact disc) by contacting the person or team listed under *Accessible Format* in section VIII of this notice.

2. *Content and Form of Application Submission:* Requirements concerning the content of an application, together with the forms you must submit, are in the application package for this competition.

Page Limit: The application narrative (Part III of the application) is where you, the applicant, address the selection criteria that reviewers use to evaluate your application. You must limit Part III to the equivalent of no more than 50 pages, using the following standards:

- A ''page'' is 8.5″ x 11″, on one side only, with 1'' margins at the top, bottom, and both sides.
- Double space (no more than three lines per vertical inch) all text in the application narrative, including titles, headings, footnotes, quotations, references, and captions.
- Use a font that is either 12 point or larger or no smaller than 10 pitch (characters per inch).
- Use one of the following fonts: Times New Roman, Courier, Courier New, or Arial. An application submitted in any other font (including Times Roman or Arial Narrow) will not be accepted.

The page limit does not apply to Part I, the cover sheet; Part II, the budget section, including the narrative budget justification; Part IV, the assurances and certifications; or the one-page abstract, the resumes, the bibliography, the references, or the letters of support. However, the page limit does apply to all of the application narrative in Part III.

We will reject your application if you exceed the page limit; or if you apply other standards and exceed the equivalent of the page limit.

3. *Submission Dates and Times:*

Applications Available: June 18, 2012.

Deadline for Transmittal of Applications: July 18, 2012.

Applications for grants under this competition may be submitted electronically using the Grants.gov Apply site (Grants.gov), or in paper format by mail or hand delivery. For information (including dates and times) about how to submit your application electronically, or in paper format by mail or hand delivery, please refer to section IV. 7. *Other Submission Requirements* of this notice.

We do not consider an application that does not comply with the deadline requirements.

Individuals with disabilities who need an accommodation or auxiliary aid in connection with the application process should contact the person listed under **FOR FURTHER INFORMATION CONTACT** in section VII of this notice. If the Department provides an accommodation or auxiliary aid to an individual with a disability in connection with the application process, the individual's application remains subject to all other requirements and limitations in this notice.

4. *Intergovernmental Review:* This program is subject to Executive Order 12372 and the regulations in 34 CFR part 79. Information about Intergovernmental Review of Federal Programs under Executive Order 12372 is in the application package for this program.

5. *Funding Restrictions:* We reference regulations outlining funding restrictions in the *Applicable Regulations* section of this notice.

6. *Data Universal Numbering System Number, Taxpayer Identification Number, and Central Contractor Registry:* To do business with the Department of Education, you must—

a. Have a Data Universal Numbering System (DUNS) number and a Taxpayer Identification Number (TIN);

b. Register both your DUNS number and TIN with the Central Contractor Registry (CCR), the Government's primary registrant database;

c. Provide your DUNS number and TIN on your application; and

d. Maintain an active CCR registration with current information while your application is under review by the Department and, if you are awarded a grant, during the project period.

You can obtain a DUNS number from Dun and Bradstreet. A DUNS number can be created within one business day.

If you are a corporate entity, agency, institution, or organization, you can obtain a TIN from the Internal Revenue Service. If you are an individual, you can obtain a TIN from the Internal Revenue Service or the Social Security Administration. If you need a new TIN, please allow 2–5 weeks for your TIN to become active.

The CCR registration process may take five or more business days to complete. If you are currently registered with the CCR, you may not need to make any changes. However, please make certain that the TIN associated with your DUNS number is correct. Also note that you will need to update your CCR registration on an annual basis. This may take three or more business days to complete.

In addition, if you are submitting your application via Grants.gov, you must (1) be designated by your organization as an Authorized Organization Representative (AOR); and (2) register yourself with Grants.gov as an AOR. Details on these steps are outlined at the following Grants.gov Web page: *www.grants.gov/applicants/get_registered.jsp*.

7. *Other Submission Requirements:* Applications for grants under this competition may be submitted electronically or in paper format by mail or hand delivery.

a. *Electronic Submission of Applications.*

We are participating as a partner in the Governmentwide Grants.gov Apply site. The Early Childhood Personnel Center, CFDA number 84.325B, is included in this project. We request your participation in Grants.gov.

If you choose to submit your application electronically, you must use the Governmentwide Grants.gov Apply site at *www.Grants.gov*. Through this site, you will be able to download a copy of the application package, complete it offline, and then upload and submit your application. You may not email an electronic copy of a grant application to us.

You may access the electronic grant application for the Early Childhood Personnel Center at *www.Grants.gov*. You must search for the downloadable application package for this program by the CFDA number. Do not include the CFDA number's alpha suffix in your search (e.g., search for 84.325, not 84.325B).

Please note the following:

- Your participation in Grants.gov is voluntary.
- When you enter the Grants.gov site, you will find information about submitting an application electronically through the site, as well as the hours of operation.
- Applications received by Grants.gov are date and time stamped. Your application must be fully uploaded and submitted and must be date and time stamped by the Grants.gov system no later than 4:30:00 p.m., Washington, DC time, on the application deadline date. Except as otherwise noted in this section, we will not accept your application if it is received—that is, date and time stamped by the Grants.gov system—after 4:30:00 p.m., Washington, DC time, on the application deadline date. We do not consider an application that does not comply with the deadline requirements. When we retrieve your application from Grants.gov, we will notify you if we are rejecting your application because it was date and time stamped by the Grants.gov system after 4:30:00 p.m., Washington, DC time, on the application deadline date.
- The amount of time it can take to upload an application will vary depending on a variety of factors, including the size of the application and the speed of your Internet connection. Therefore, we strongly recommend that you do not wait until the application deadline date to begin the submission process through Grants.gov.
- You should review and follow the Education Submission Procedures for submitting an application through Grants.gov that are included in the application package for this competition to ensure that you submit your application in a timely manner to the Grants.gov system. You can also find the Education Submission Procedures pertaining to Grants.gov under News and Events on the Department's G5 system home page at *www.G5.gov*.
- You will not receive additional point value because you submit your application in electronic format, nor will we penalize you if you submit your application in paper format.
- If you submit your application electronically, you must submit all documents electronically, including all information you typically provide on the following forms: The Application for Federal Assistance (SF 424), the Department of Education Supplemental Information for SF 424, Budget Information—Non-Construction Programs (ED 524), and all necessary assurances and certifications.
- If you submit your application electronically, you must upload any narrative sections and all other attachments to your application as files in a PDF (Portable Document) read-only, non-modifiable format. Do not upload an interactive or fillable PDF file. If you upload a file type other than a read-only, non-modifiable PDF or submit a password-protected file, we will not review that material. Additional, detailed information on how to attach files is in the application instructions.
- Your electronic application must comply with any page-limit requirements described in this notice.
- After you electronically submit your application, you will receive from Grants.gov an automatic notification of receipt that contains a Grants.gov tracking number. (This notification indicates receipt by Grants.gov only, not receipt by the Department.) The Department then will retrieve your application from Grants.gov and send a second notification to you by email. This second notification indicates that the Department has received your application and has assigned your application a PR/Award number (an ED-

specified identifying number unique to your application).

- We may request that you provide us original signatures on forms at a later date.

Application Deadline Date Extension in Case of Technical Issues with the Grants.gov System: If you are experiencing problems submitting your application through Grants.gov, please contact the Grants.gov Support Desk, toll free, at 1–800–518–4726. You must obtain a Grants.gov Support Desk Case Number and must keep a record of it.

If you are prevented from electronically submitting your application on the application deadline date because of technical problems with the Grants.gov system, we will grant you an extension until 4:30:00 p.m., Washington, DC time, the following business day to enable you to transmit your application electronically or by hand delivery. You also may mail your application by following the mailing instructions described elsewhere in this notice.

If you submit an application after 4:30:00 p.m., Washington, DC time, on the application deadline date, please contact the person listed under For Further Information Contact in section VII of this notice and provide an explanation of the technical problem you experienced with Grants.gov, along with the Grants.gov Support Desk Case Number. We will accept your application if we can confirm that a technical problem occurred with the Grants.gov system and that that problem affected your ability to submit your application by 4:30:00 p.m., Washington, DC time, on the application deadline date. The Department will contact you after a determination is made on whether your application will be accepted.

Note: The extensions to which we refer in this section apply only to the unavailability of, or technical problems with, the Grants.gov system. We will not grant you an extension if you failed to fully register to submit your application to Grants.gov before the application deadline date and time or if the technical problem you experienced is unrelated to the Grants.gov system.

b. *Submission of Paper Applications by Mail.*

If you submit your application in paper format by mail (through the U.S. Postal Service or a commercial carrier), you must mail the original and two copies of your application, on or before the application deadline date, to the Department at the following address: U.S. Department of Education, Application Control Center, Attention: (CFDA Number 84.325B), LBJ Basement Level 1, 400 Maryland Avenue SW., Washington, DC 20202–4260.

You must show proof of mailing consisting of one of the following:

(1) A legibly dated U.S. Postal Service postmark.

(2) A legible mail receipt with the date of mailing stamped by the U.S. Postal Service.

(3) A dated shipping label, invoice, or receipt from a commercial carrier.

(4) Any other proof of mailing acceptable to the Secretary of the U.S. Department of Education.

If you mail your application through the U.S. Postal Service, we do not accept either of the following as proof of mailing:

(1) A private metered postmark.

(2) A mail receipt that is not dated by the U.S. Postal Service.

If your application is postmarked after the application deadline date, we will not consider your application.

Note: The U.S. Postal Service does not uniformly provide a dated postmark. Before relying on this method, you should check with your local post office.

c. *Submission of Paper Applications by Hand Delivery.*

If you submit your application in paper format by hand delivery, you (or a courier service) must deliver the original and two copies of your application by hand, on or before the application deadline date, to the Department at the following address: U.S. Department of Education, Application Control Center, Attention: (CFDA Number 84.325B), 550 12th Street SW., Room 7041, Potomac Center Plaza, Washington, DC 20202–4260.

The Application Control Center accepts hand deliveries daily between 8:00 a.m. and 4:30:00 p.m., Washington, DC time, except Saturdays, Sundays, and Federal holidays.

Note for Mail or Hand Delivery of Paper Applications: If you mail or hand deliver your application to the Department—

(1) You must indicate on the envelope and—if not provided by the Department—in Item 11 of the SF 424 the CFDA number, including suffix letter, if any, of the competition under which you are submitting your application; and

(2) The Application Control Center will mail to you a notification of receipt of your grant application. If you do not receive this notification within 15 business days from the application deadline date, you should call the U.S. Department of Education Application Control Center at (202) 245–6288.

V. Application Review Information

1. *Selection Criteria:* The selection criteria for this program are from 34 CFR 75.210 and are listed in the application package.

2. *Review and Selection Process:* We remind potential applicants that in reviewing applications in any discretionary grant competition, the Secretary may consider, under 34 CFR 75.217(d)(3), the past performance of the applicant in carrying out a previous award, such as the applicant's use of funds, achievement of project objectives, and compliance with grant conditions. The Secretary may also consider whether the applicant failed to submit a timely performance report or submitted a report of unacceptable quality.

In addition, in making a competitive grant award, the Secretary also requires various assurances including those applicable to Federal civil rights laws that prohibit discrimination in programs or activities receiving Federal financial assistance from the Department of Education (34 CFR 100.4, 104.5, 106.4, 108.8, and 110.23).

3. *Additional Review and Selection Process Factors:* In the past, the Department has had difficulty finding peer reviewers for certain competitions because so many individuals who are eligible to serve as peer reviewers have conflicts of interest. The Standing Panel requirements under section 682(b) of IDEA also have placed additional constraints on the availability of reviewers. Therefore, the Department has determined that for some discretionary grant competitions, applications may be separated into two or more groups and ranked and selected for funding within specific groups. This procedure will make it easier for the Department to find peer reviewers by ensuring that greater numbers of individuals who are eligible to serve as reviewers for any particular group of applicants will not have conflicts of interest. It also will increase the quality, independence, and fairness of the review process, while permitting panel members to review applications under discretionary grant competitions for which they also have submitted applications. However, if the Department decides to select an equal number of applications in each group for funding, this may result in different cut-off points for fundable applications in each group.

4. *Special Conditions:* Under 34 CFR 74.14 and 80.12, the Secretary may impose special conditions on a grant if the applicant or grantee is not financially stable; has a history of

unsatisfactory performance; has a financial or other management system that does not meet the standards in 34 CFR parts 74 or 80, as applicable; has not fulfilled the conditions of a prior grant; or is otherwise not responsible.

VI. Award Administration Information

1. *Award Notices:* If your application is successful, we notify your U.S. Representative and U.S. Senators and send you a Grant Award Notification (GAN). We may notify you informally, also.

If your application is not evaluated or not selected for funding, we notify you.

2. *Administrative and National Policy Requirements:* We identify administrative and national policy requirements in the application package and reference these and other requirements in the *Applicable Regulations* section of this notice.

We reference the regulations outlining the terms and conditions of an award in the *Applicable Regulations* section of this notice and include these and other specific conditions in the GAN. The GAN also incorporates your approved application as part of your binding commitments under the grant.

3. *Reporting:* (a) If you apply for a grant under this competition, you must ensure that you have in place the necessary processes and systems to comply with the reporting requirements in 2 CFR part 170 should you receive funding under the competition. This does not apply if you have an exception under 2 CFR 170.110(b).

(b) At the end of your project period, you must submit a final performance report, including financial information, as directed by the Secretary. If you receive a multi-year award, you must submit an annual performance report that provides the most current performance and financial expenditure information as directed by the Secretary under 34 CFR 75.118. The Secretary may also require more frequent performance reports under 34 CFR 75.720(c). For specific requirements on reporting, please go to *www.ed.gov/fund/grant/apply/appforms/appforms.html.*

4. *Performance Measures:* Under the Government Performance and Results Act of 1993 (GPRA), the Department has established a set of performance measures, including long-term measures, that are designed to yield information on various aspects of the effectiveness and quality of the Technical Assistance and Dissemination to Improve Services and Results for Children with Disabilities program. For purposes of this priority, the Center will use these measures which focus on the extent to which projects provide high-quality products and services, the relevance of project products and services to educational and early intervention policy and practice, and the use of products and services to improve educational and early intervention policy and practice.

Grantees will be required to report information on their project's performance in annual reports to the Department (34 CFR 75.590).

5. *Continuation Awards:* In making a continuation award, the Secretary may consider, under 34 CFR 75.253, the extent to which a grantee has made ''substantial progress toward meeting the objectives in its approved application.'' This consideration includes the review of a grantee's progress in meeting the targets and projected outcomes in its approved application, and whether the grantee has expended funds in a manner that is consistent with its approved application and budget. In making a continuation grant, the Secretary also considers whether the grantee is operating in compliance with the assurances in its approved application, including those applicable to Federal civil rights laws that prohibit discrimination in programs or activities receiving Federal financial assistance from the Department (34 CFR 100.4, 104.5, 106.4, 108.8, and 110.23).

VII. Agency Contact

FOR FURTHER INFORMATION CONTACT: Dawn Ellis, U.S. Department of Education, 400 Maryland Avenue SW., room 4092, Potomac Center Plaza (PCP), Washington, DC 20202–2600. Telephone: (202) 245–6417.

If you use a TDD or a TTY, call the Federal Relay Service (FRS), toll free, at 1–800–877–8339.

VIII. Other Information

Accessible Format: Individuals with disabilities can obtain this document and a copy of the application package in an accessible format (e.g., braille, large print, audiotape, or compact disc) by contacting the Grants and Contracts Services Team, U.S. Department of Education, 400 Maryland Avenue SW., Room 5075, PCP, Washington, DC 20202–2550. Telephone: (202) 245–7363. If you use a TDD or a TTY, call the FRS, toll free, at 1–800–877–8339.

Electronic Access to This Document: The official version of this document is the document published in the **Federal Register**. Free Internet access to the official edition of the **Federal Register** and the Code of Federal Regulations is available via the Federal Digital System at: *www.gpo.gov/fdsys.* At this site you can view this document, as well as all other documents of this Department published in the **Federal Register**, in text or Adobe Portable Document Format (PDF). To use PDF you must have Adobe Acrobat Reader, which is available free at the site.

You may also access documents of the Department published in the **Federal Register** by using the article search feature at: *www.federalregister.gov.* Specifically, through the advanced search feature at this site, you can limit your search to documents published by the Department.

Dated: June 12, 2012.

Alexa Posny,

Assistant Secretary for Special Education and Rehabilitative Services.

[FR Doc. 2012–14812 Filed 6–15–12; 8:45 am]

BILLING CODE 4000–01–P

DEPARTMENT OF ENERGY

International Energy Agency Meetings

AGENCY: Department of Energy.

ACTION: Notice of meetings.

SUMMARY: The Industry Advisory Board (IAB) to the International Energy Agency (IEA) will meet on June 26, 2012, at the headquarters of the IEA in Paris, France in connection with a joint meeting of the IEA's Standing Group on Emergency Questions (SEQ) and the IEA's Standing Group on the Oil Market (SOM) to be held on the same date; and on June 27–28 in connection with a meeting of the SEQ on June 27 and 28.

DATES: June 26–28, 2012.

ADDRESSES: 9, rue de la Fédération, Paris, France.

FOR FURTHER INFORMATION CONTACT: Diana D. Clark, Assistant General for International and National Security Programs, Department of Energy, 1000 Independence Avenue SW., Washington, DC 20585, 202–586–3417.

SUPPLEMENTARY INFORMATION: In accordance with section 252(c)(1)(A)(i) of the Energy Policy and Conservation Act (42 U.S.C. 6272(c)(1)(A)(i)) (EPCA), the following notice of meetings is provided:

Meetings of the Industry Advisory Board (IAB) to the International Energy Agency (IEA) will be held at the headquarters of the IEA, 9, rue de la Fédération, Paris, France, on June 26, 2012, beginning at 2:30 p.m. The purpose of this notice is to permit attendance by representatives of U.S. company members of the IAB at a joint meeting of the IEA's Standing Group on Emergency Questions (SEQ) and the IEA's Standing Group on the Oil Market (SOM) which is scheduled to be held at

the same location and time. The IAB will also meet at the IEA's headquarters on June 27–28, 2012, commencing at 9:30 a.m. on June 27 and continuing at 9:00 a.m. on June 28. The June 27 meeting will be immediately followed by a meeting of the Emergency Response Exercise 6 (ERE6) design group, to which certain IAB members will be invited. The IAB will also hold a preparatory meeting among company representatives at the same location at 8:30 a.m. on June 27. The agenda for this preparatory meeting is to review the agendas for the SEQ meeting on June 27–28.

The agenda of the joint session of the SEQ and the SOM on June 26 is under the control of the SEQ and the SOM. It is expected that the SEQ and the SOM will adopt the following agenda:

1. Adoption of the Agenda.
2. Approval of the Summary Record of the March 2012 Joint Session.
3. Reports on Recent Oil Market and Policy Developments in IEA Countries.
4. The Current Oil Market Situation.
5. The Program of Work and Budget 2013–2014.
6. The Medium-Term Gas Market Report 2012.
7. Other Business:

—Tentative Schedule of Upcoming Meetings:

October 17–18, 2012.

—November 26–28, 2012 (ERE6).

The agenda of the SEQ meeting on June 27 is under the control of the SEQ. It is expected that the SEQ will adopt the following agenda:

1. Adoption of the Agenda.
2. Approval of the Summary Record of the 135th Meeting.
3. Status of Compliance with IEP Stockholding Commitments.
4. Emergency Response Review Program.

—Schedule of Emergency Response Reviews.
—Emergency Response Review of Finland.
—Emergency Response Review of Sweden.

5. Emergency Response Exercises.

—Preparations for ERE6.

6. Emergency Response Measures.

—Costs and Benefits of Stockholding (Progress Report).

7. Electricity Security Action Plan.
8. Policy and Other Developments in Member Countries.

—Mid-Term Emergency Response Review of Ireland.
—Mid-Term Emergency Response Review of Canada.
—Data Collection in Greece.

9. Report from the Industry Advisory Board.
10. Activities with International Organizations and Non-Member Countries.

—ASEAN (APSA).
—Chile.
—Estonia.
—India (report on ERE).
—China.
—Thailand.

11. Documents for Information.

—Emergency Reserve Situation of IEA Member Countries on April 1, 2012.
—Base Period Final Consumption: 2Q 2011–1Q 2012.
—Updated Emergency Contacts List.

12. Other Business.

—Tentative Schedule of Next Meetings:
  —October 17–18, 2012.
  —November 26–28, 2012 (ERE6).

It is expected that that the agenda for the Exercise for SEQ delegates and IAB members to be held on June 28 will be as follows:

1. Introduction.
2. Breakout Groups—Hypothetical Supply Disruption.
3. Plenary Discussion with Summary From Breakout Groups.
4. Overview of Current Oil Market Situation, with Focus on Impact of Iranian Sanctions.
5. Plenary with Round Table Discussion.

As provided in section 252(c)(1)(A)(ii) of the Energy Policy and Conservation Act (42 U.S.C. 6272(c)(1)(A)(ii)), the meetings of the IAB are open to representatives of members of the IAB and their counsel; representatives of members of the IEA's Standing Group on Emergency Questions and the IEA's Standing Group on the Oil Markets; representatives of the Departments of Energy, Justice, and State, the Federal Trade Commission, the General Accounting Office, Committees of Congress, the IEA, and the European Commission; and invitees of the IAB, the SEQ, the SOM, or the IEA.

Issued in Washington, DC, June 11, 2012.

Diana D. Clark,

Assistant General Counsel for International and National Security Programs.

[FR Doc. 2012–14765 Filed 6–15–12; 8:45 am]

BILLING CODE 6450–01–P

DEPARTMENT OF ENERGY

SunShot Prize: America's Most Affordable Rooftop

AGENCY: Office of Energy Efficiency and Renewable Energy, Department of Energy, DoE.

ACTION: Notice of public comment period.

SUMMARY: The Department of Energy (DOE) announces in this notice the release of the SunShot Prize: America's Most Affordable Rooftop Solar for public comment. Interested persons are encouraged to learn about the SunShot Prize: America's Most Affordable Rooftop rules at *eere.energy.gov/solar/sunshot/prize.html.*

DATES: DOE will accept comments regarding the SunShot Prize received no later than July 13, 2012.

ADDRESSES: To submit comments, interested persons are encouraged to follow any of the listed methods:

Email: SunShot.Prize@ee.doe.gov. Include ''America's Most Affordable Rooftop'' in the Subject line

Mail: U.S. Department of Energy, Office of Solar, 1000 Independence Avenue SW., Washington, DC 20585

FOR FURTHER INFORMATION CONTACT: Rachel Tronstein, U.S. Department of Energy, Solar Program, 1000 Independence Avenue SW., Washington, DC 20585. Email: *SunShot.Prize@ee.doe.gov.*

SUPPLEMENTARY INFORMATION: In 2011 the America COMPETES Reauthorization Act of 2010 was signed into law, authorizing the United States government to issue competitions in the areas of technology, education and science. The $10 million SunShot Prize: America's Most Affordable Rooftop Solar challenges the ingenuity of America's businesses and communities to make it faster, easier, and cheaper to install rooftop solar energy systems. Successful competitors will domestically deploy at least 5,000 new rooftop photovoltaic (PV) installations at average pre-subsidy sales price of $2 per watt before January 1, 2015. Winners will break a significant price barrier, considered to be unachievable a decade ago. Winners will prove that they can repeatedly achieve a $2 per watt install price using innovative, verifiable processes and business practices.

Today's notice announces the availability of draft procedures for administration of the prize competition. The DOE will consider any comments received by July 13, 2012 in adopting these procedures.

Issued in Denver, Colorado, on June 13, 2012.

David T. Danielson,

Assistant Secretary, Office of Energy Efficiency and Renewable Energy.

[FR Doc. 2012–14772 Filed 6–15–12; 8:45 am]

BILLING CODE 6450–01–P

ENVIRONMENTAL PROTECTION AGENCY

[FRL–9688–6]

Public Meeting on Draft Permitting Guidance for Oil and Gas Hydraulic Fracturing Activities Using Diesel Fuels

AGENCY: Environmental Protection Agency (EPA).

ACTION: Notice.

SUMMARY: The Environmental Protection Agency (EPA or agency) is announcing a public meeting to discuss draft permitting guidance the agency has developed on the use of diesel fuels in oil and gas hydraulic fracturing and to solicit input during the public comment period. The meeting is open to all interested parties. The agency requests input on the following technical aspects of the draft permitting guidance: Diesel fuels description; diesel fuels usage information; permit duration and well closure; area of review; information submitted with the permit application; and monitoring.

DATES: The meeting will take place on Monday, June 29, 2012, in Room 1153 EPA East, 1201 Constitution Ave. NW., Washington, DC. Participants may choose from two sessions, from 8:30 a.m. to 12 p.m. or from 1:30 p.m. to 5:00 p.m. Seating is limited. Registration will be filled on a first-come, first-served basis. To allow for maximum public participation, registrants are asked to select one session only. Pre-registration will open on Wednesday, June 20, 2012, and close on Thursday, June 28, 2012, at noon. Registration may also be available at the door as space permits. See **SUPPLEMENTARY INFORMATION** section for registration details.

FOR FURTHER INFORMATION CONTACT: Sherri Comerford, Office of Ground Water and Drinking Water, Environmental Protection Agency, 1200 Pennsylvania Ave. NW., Mailcode 4606M, Washington, DC 20460; telephone number: 202–564–4639; email address: *comerford.sherri@epa.gov.*

SUPPLEMENTARY INFORMATION: EPA is hosting a public informational meeting to discuss ''Permitting Guidance for Oil and Gas Hydraulic Fracturing Activities Using Diesel Fuels—Draft: Underground Injection Control Program Guidance #84.'' The draft guidance, available at this Web site, *http://water.epa.gov/type/groundwater/uic/class2/hydraulic fracturing/hydraulic-fracturing.cfm,* is intended to provide information for EPA permit writers issuing permits under the Safe Drinking Water Act to ensure protection of underground sources of drinking water. The draft guidance is open for public comment from May 10, 2012, to July 9, 2012, to allow stakeholders to provide input and feedback before it is finalized. The meeting is open to the public, and all interested stakeholders are invited to attend.

Registration details: Registration is scheduled to open on Wednesday, June 20, 2012, and close on Thursday, June 28, 2012, at noon. Participants are requested to pre-register for either the 8:30 a.m. to 12:00 p.m. session or the 1:30 p.m. to 5:00 p.m. session, using an online form that will be accessible from the following Web site: *http://water.epa.gov/type/groundwater/uic/class2/hydraulicfracturing/wells_hydroout.cfm.* Registration may also be available at the door as space permits. Please check the Web site for availability.

Meeting information: Both morning and afternoon sessions will begin with a brief presentation by the EPA Office of Ground Water and Drinking Water on the basics of the guidance. Copies of EPA's presentation will be available at the meeting and posted on the Web at *http://water.epa.gov/type/groundwater/uic/class2/hydraulicfracturing/wells_hydroout.cfm* the day of the meeting. An oral comment session will follow the presentation. Oral comments will be limited to two (2) minutes each, and it is preferred that only one person present the statement on behalf of a group or organization to accommodate as many participants as possible. Registered attendees requesting to make an oral presentation will be placed on the commenting schedule. Time slots are limited and will be filled on a first-come, first-served basis. EPA may ask clarifying questions during the oral presentations, but will not respond to the presentations.

You may present oral comments during the meeting; and/or submit written comments and supporting information directly to EPA. Instructions for submitting comments, the draft guidance, and a **Federal Register** notice providing detail on topics on which the agency invites comment, are available on the Web site, *http://water.epa.gov/type/groundwater/uic/class2/hydraulicfracturing/hydraulic-fracturing.cfm.* Written statements and supporting information submitted during the comment period will be considered in the same manner as any oral comments and supporting information presented at the public meeting. The agency requests input on the following technical aspects of the draft permitting guidance: diesel fuels description; diesel fuels usage information; permit duration and well closure; area of review; information submitted with the permit application; and monitoring.

All attendees must go through a metal detector, sign in with the security desk, and show government-issued photo identification to enter the building.

Special Accommodations: For information on access or services for individuals with disabilities and to request accommodation of a disability, please contact Sherri Comerford at (202) 564–4639 or *Comerford.Sherri@epa.gov,* preferably at least 5 days prior to the meeting, to give EPA as much time as possible to process your request.

Dated: June 11, 2012.

Pamela S. Barr,

Acting Director, Office of Ground Water and Drinking Water.

[FR Doc. 2012–14786 Filed 6–15–12; 8:45 am]

BILLING CODE 6560–50–P

ENVIRONMENTAL PROTECTION AGENCY

[FRL–9688–5]

Notification of a Joint Public Meeting of the Chartered Science Advisory Board and Chartered Board of Scientific Counselors

AGENCY: Environmental Protection Agency (EPA).

ACTION: Notice of meeting.

SUMMARY: The Environmental Protection Agency (EPA) Science Advisory Board (SAB) Staff Office announces a joint public meeting of the Chartered SAB and the EPA's Office of Research and Development (ORD) Chartered Board of Scientific Counselors (BOSC) to provide advice on ORD's plans to implement its research program.

DATES: The public meeting will be held on Tuesday, July 10, 2012 from 8:30 a.m. to 5:30 p.m. and Wednesday, July 11, 2012 from 8:30 a.m. to 3:00 p.m. (Eastern Daylight Time).

ADDRESSES: The meeting will be held at the The Renaissance Raleigh North Hills Hotel, 4100 Main at North Hills Street, Raleigh, NC 27609.

FOR FURTHER INFORMATION CONTACT: Any member of the public who wishes further information concerning the meeting may contact Dr. Angela Nugent, Designated Federal Officer (DFO), EPA Science Advisory Board (1400R), U.S. Environmental Protection Agency, 1200 Pennsylvania Avenue NW., Washington, DC 20460; via telephone/voice mail (202) 564–2218, fax (202) 565–2098; or email at *nugent.angela@epa.gov.*

General information concerning the SAB can be found on the EPA Web site at *http://www.epa.gov/sab.*

SUPPLEMENTARY INFORMATION:

Background: The SAB was established pursuant to the Environmental Research, Development, and Demonstration Authorization Act (ERDAA), codified at 42 U.S.C. 4365, to provide independent scientific and technical advice to the Administrator on the technical basis for Agency positions and regulations. The BOSC was established by the EPA to provide advice, information, and recommendations regarding the ORD research program. The SAB and BOSC are Federal Advisory Committees chartered under the Federal Advisory Committee Act (FACA), 5 U.S.C., App. 2. Pursuant to FACA and EPA policy, notice is hereby given that the chartered SAB and chartered BOSC will hold a joint public meeting to discuss advice on ORD's research programs. The SAB and BOSC will comply with the provisions of FACA and all appropriate SAB Staff Office procedural policies.

ORD has restructured its research programs to better understand environmental problems and inform sustainable solutions to meet EPA's strategic goals. The restructured research programs comprise six program areas: Air, Climate, and Energy; Safe and Sustainable Water Resources; Sustainable and Healthy Communities; Chemical Safety for Sustainability; Human Health Risk Assessment; and Homeland Security.

ORD requested that the SAB work jointly with the BOSC in 2011 to provide early advice on ORD strategic research directions. In response, the SAB and BOSC held a joint public meeting on June 29–30, 2011 (76 FR 32198–32199) and a public teleconference on September 19, 2011 (76 FR 54463) to develop a report, *Office of Research and Development (ORD) New Strategic Research Directions: A Joint Report of the Science Advisory Board (SAB) and ORD Board of Scientific Councilors (BOSC),* EPA–SAB–12–001. After receiving this advisory report, ORD requested SAB and BOSC additional advice on ORD's research implementation plans, efforts to strengthen program integration and efforts to strengthen and measure innovation. The SAB and BOSC will focus on those topics at the July 10–11, 2012 meeting.

Availability of Meeting Materials: A meeting agenda and other materials for the meeting will be placed on the SAB Web site at *http://epa.gov/sab.*

Procedures for Providing Public Input: Public comment for consideration by EPA's federal advisory committees and panels has a different purpose from public comment provided to EPA program offices. Therefore, the process for submitting comments to a federal advisory committee is different from the process used to submit comments to an EPA program office. Federal advisory committees and panels, including scientific advisory committees, provide independent advice to EPA. Members of the public can submit relevant comments pertaining to the group providing advice, EPA's charge questions and EPA review or background documents. Input from the public to the SAB will have the most impact if it consists of comments that provide specific scientific or technical information or analysis for the SAB panel to consider or if it relates to the clarity or accuracy of the technical information. Members of the public wishing to provide comment should contact the DFO for the relevant advisory committee directly. *Oral Statements:* In general, individuals or groups requesting an oral presentation at a public meeting will be limited to five minutes. To be placed on the public speaker list for the July 10–11, 2012 meeting, interested parties should notify Dr. Angela Nugent, DFO, by email no later than July 3, 2012. *Written Statements:* Written statements for the July 10–11, 2012 meeting should be received in the SAB Staff Office by July 3, 2012, so that the information may be made available to the SAB and BOSC for their consideration prior to this meeting. Written statements should be supplied to the DFO in the following formats: one hard copy with original signature and one electronic copy via email (acceptable file format: Adobe Acrobat PDF, MS Word, WordPerfect, MS PowerPoint, or Rich Text files in IBM–PC/Windows 98/2000/XP format). Submitters are asked to provide electronic versions of each document submitted with *and* without signatures, because the SAB Staff Office does not publish documents with signatures on its Web sites.

Accessibility: For information on access or services for individuals with disabilities, please contact Dr. Nugent at the phone number or email address noted above, preferably at least ten days prior to the meeting, to give EPA as much time as possible to process your request.

Dated: June 11, 2012.

Thomas H. Brennan,

Deputy Director, EPA Science Advisory Board Staff Office.

[FR Doc. 2012–14821 Filed 6–15–12; 8:45 am]

BILLING CODE 6560–50–P

ENVIRONMENTAL PROTECTION AGENCY

[EPA–R04–OW–2011–0937; FRL–9688–2]

Public Water System Supervision Program Revision for the State of Alabama

AGENCY: Environmental Protection Agency (EPA).

ACTION: Notice of tentative approval.

SUMMARY: Notice is hereby given that the State of Alabama is revising its approved Public Water System Supervision Program. Alabama has adopted the following rules: Long Term 1 Enhanced Surface Water Treatment Rule, Long Term 2 Enhanced Surface Water Treatment Rule, and Stage 2 Disinfection/Disinfection Byproducts Rule. EPA has determined that Alabama's rules are no less stringent than the corresponding federal regulations. Therefore, EPA is tentatively approving this revision to the State of Alabama's Public Water System Supervision Program.

DATES: Any interested person may request a public hearing. A request for a public hearing must be submitted by July 18, 2012, to the Regional Administrator at the EPA Region 4 address shown below. The Regional Administrator may deny frivolous or insubstantial requests for a hearing. However, if a substantial request for a public hearing is made by July 18, 2012, a public hearing will be held. If EPA Region 4 does not receive a timely and appropriate request for a hearing and the Regional Administrator does not elect to hold a hearing on her own motion, this determination shall become final and effective on July 18, 2012. Any request for a public hearing shall include the following information: The name, address, and telephone number of the individual, organization, or other entity requesting a hearing; a brief statement of the requesting person's interest in the Regional Administrator's determination and a brief statement of the information that the requesting person intends to submit at such hearing; and the signature of the individual making the request, or, if the request is made on behalf of an organization or other entity, the signature of a responsible official of the organization or other entity.

ADDRESSES: All documents relating to this determination are available for inspection between the hours of 8:30 a.m. and 4:30 p.m., Monday through Friday, at the following offices: Alabama Department of Environmental Management, Drinking Water Branch,

1400 Coliseum Boulevard, Montgomery, Alabama 36130; and the U.S. Environmental Protection Agency, Region 4, Safe Drinking Water Branch, 61 Forsyth Street SW., Atlanta, Georgia 30303.

FOR FURTHER INFORMATION CONTACT: Brian Smith, EPA Region 4, Safe Drinking Water Branch, at the address given above, by telephone at (404) 562–9845, or at *smith.brian@epa.gov.*

Authority: Section 1413 of the Safe Drinking Water Act, as amended (1996), and 40 CFR Part 142.

Dated: June 5, 2012.

Gwendolyn Keyes Fleming,

Regional Administrator, Region 4.

[FR Doc. 2012–14783 Filed 6–15–12; 8:45 am]

BILLING CODE 6560–50–P

FEDERAL DEPOSIT INSURANCE CORPORATION

Agency Information Collection Activities: Submission for OMB Review; Comment Request

AGENCY: Federal Deposit Insurance Corporation (FDIC).

ACTION: Notice of information collection to be submitted to OMB for review and approval under the Paperwork Reduction Act.

SUMMARY: In accordance with requirements of the Paperwork Reduction Act of 1995 (''PRA''), 44 U.S.C. 3501 *et seq.*, the FDIC may not conduct or sponsor, and the respondent is not required to respond to, an information collection unless it displays a currently valid Office of Management and Budget (OMB) control number. The FDIC, as part of its continuing effort to reduce paperwork and respondent burden, invites the general public and other Federal agencies to take this opportunity to comment on the renewal of an existing information collection, as required by the PRA. On April 10, 2012 (77 FR 21558), the FDIC solicited public comment for a 60-day period on the renewal of the following information collection: Interagency Notice of Change in Director or Executive Officer (OMB No. 3064–0097). No comments were received. Therefore, the FDIC hereby gives notice of submission of its request for renewal to OMB for review.

DATES: Comments must be submitted on or before July 18, 2012.

ADDRESSES: Interested parties are invited to submit written comments to the FDIC by any of the following methods:

- *http://www.FDIC.gov/regulations/laws/federal/notices.html.*
- *Email: comments@fdic.gov* Include the name of the collection in the subject line of the message.
- *Mail:* Gary A. Kuiper (202.898.3877), Counsel, Room NYA–5046, Federal Deposit Insurance Corporation, 550 17th Street NW., Washington, DC 20429.
- *Hand Delivery:* Comments may be hand-delivered to the guard station at the rear of the 17th Street Building (located on F Street), on business days between 7:00 a.m. and 5:00 p.m.

All comments should refer to the relevant OMB control number. A copy of the comments may also be submitted to the OMB desk officer for the FDIC: Office of Information and Regulatory Affairs, Office of Management and Budget, New Executive Office Building, Washington, DC 20503.

FOR FURTHER INFORMATION CONTACT: Gary A. Kuiper, at the FDIC address above.

SUPPLEMENTARY INFORMATION:

Proposal to renew the following currently-approved collection of information:

Title: Interagency Notice of Change in Director or Executive Officer.

OMB Number: 3064–0097.

Affected Public: Business or other financial institutions.

Estimated Number of Respondents: 840.

Frequency of Response: Once.

Estimated Time per Response: 2 hours.

Estimated Total Annual Burden: 1,680 hours.

General Description of Collection: Certain insured state nonmember banks must notify the FDIC of the addition of a director or the employment of a senior executive officer.

Request for Comment

Comments are invited on: (a) Whether the collection of information is necessary for the proper performance of the FDIC's functions, including whether the information has practical utility; (b) the accuracy of the estimates of the burden of the information collection, including the validity of the methodology and assumptions used; (c) ways to enhance the quality, utility, and clarity of the information to be collected; and (d) ways to minimize the burden of the information collection on respondents, including through the use of automated collection techniques or other forms of information technology. All comments will become a matter of public record.

Dated at Washington, DC, this 12th day of June 2012.

Federal Deposit Insurance Corporation.

Robert E. Feldman,

Executive Secretary.

[FR Doc. 2012–14695 Filed 6–15–12; 8:45 am]

BILLING CODE 6714–01–P

FEDERAL ELECTION COMMISSION

Sunshine Act Notice

AGENCY: Federal Election Commission.

DATE AND TIME: Thursday, June 21, 2012 at 10 a.m.

PLACE: 999 E Street NW., Washington, DC (Ninth Floor).

STATUS: This meeting will be open to the public.

ITEMS TO BE DISCUSSED:

Correction and Approval of the Minutes for the Meeting of June 7, 2012.

Draft Advisory Opinion 2012–21: Primerica, Inc.

Audit Division Recommendation Memorandum on the Friends of Todd Young (FOTY) (A11–06).

Audit Division Recommendation Memorandum on the National Council of Farmer Cooperative Co-op/PAC (NCFC) (A11–26).

Management and Administrative Matters.

Individuals who plan to attend and require special assistance, such as sign language interpretation or other reasonable accommodations, should contact Shawn Woodhead Werth, Secretary and Clerk, at (202) 694–1040, at least 72 hours prior to the meeting date.

PERSON TO CONTACT FOR INFORMATION: Judith Ingram, Press Officer, Telephone: (202) 694–1220.

Signed:

Shawn Woodhead Werth,

Secretary and Clerk of the Commission.

[FR Doc. 2012–14924 Filed 6–14–12; 4:15 pm]

BILLING CODE 6715–01–P

DEPARTMENT OF HEALTH AND HUMAN SERVICES

Agency for Healthcare Research and Quality

Notice of Meetings

In accordance with section 10(d) of the Federal Advisory Committee Act as amended (5 U.S.C., Appendix 2), the Agency for Healthcare Research and Quality (AHRQ) announces meetings of scientific peer review groups. The subcommittees listed below are part of the Agency's Health Services Research Initial Review Group Committee.

The subcommittee meetings will be closed to the public in accordance with the Federal Advisory Committee Act, section 10(d) of 5 U.S.C., Appendix 2 and 5 U.S.C. 552b(c)(6). Grant applications are to be reviewed and discussed at these meetings. These discussions are likely to involve information concerning individuals associated with the applications, including assessments of their personal qualifications to conduct their proposed projects. This information is exempt from mandatory disclosure under the above-cited statutes.

1. *Name of Subcommittee:* Healthcare Effectiveness and Outcomes Research.

Date: June 19, 2012 (Open from 8:00 a.m. to 8:15 a.m. on June 19 and closed for remainder of the meeting).

Place: Crowne Plaza Rockville, 3 Research Court, Rockville, MD 20850.

2. *Name of Subcommittee:* Health Safety and Quality Improvement Research.

Date: June 19–20, 2012 (Open from 8:00 a.m. to 8:15 a.m. on June 19 and closed for remainder of the meeting).

Place: Crowne Plaza Rockville, 3 Research Court, Rockville, MD 20850.

3. *Name of Subcommittee:* Health Systems and Value Research.

Date: June 20, 2012 (Open from 8:00 a.m. to 8:15 a.m. on June 20 and closed for remainder of the meeting).

Place: Crowne Plain Rockville, 3 Research Court, Rockville, MD 20850.

4. *Name of Subcommittee:* Health Care Research Training.

Date: June 21–22, 2012 (Open from 8:30 a.m. to 8:45 a.m. on June 21 and closed for remainder of the meeting).

Place: Crowne Plaza Rockville, 3 Research Court, Rockville, MD 20850.

5. *Name of Subcommittee:* Healthcare Information Technology Research.

Date: June 28–29, 2012 (Open from 8:00 a.m. to 8:15 a.m. on June 28 and closed for remainder of the meeting).

Place: Crowne Plaza Rockville, 3 Research Court, Rockville, MD 20850.

Contact Person: Anyone wishing to obtain a roster of members, agenda or minutes of the nonconfidential portions of the meetings should contact Mrs. Bonnie Campbell, Committee Management Officer, Office of Extramural Research, Education and Priority Populations, AHRQ, 540 Gaither Road, Suite 2000, Rockville, Maryland 20850, Telephone (301) 427–1554.

Agenda items for these meetings are subject to change as priorities dictate.

Dated: May 31, 2012.

Carolyn M. Clancy,

Director.

[FR Doc. 2012–13772 Filed 6–14–12; 11:15 am]

BILLING CODE 4160–90–M

DEPARTMENT OF HEALTH AND HUMAN SERVICES

Administration for Children and Families

Submission for OMB Review; Comment Request

Title: Impact Studies of the Health Professions Opportunity Grants.

OMB No.: 0970–0394.

The Administration for Children and Families (ACF), U.S. Department of Health and Human Services (HHS) is proposing data collection activities as part of the Impact Studies of the Health Professions Opportunity Grants (HPOG-Impact). The goal of HPOG-Impact is to evaluate the effectiveness of approaches HPOG grantees use to provide Temporary Assistance for Needy Families (TANF) recipients and other low-income individuals with opportunities for education, training and advancement within the health care field. HPOG-Impact also is intended to evaluate variation in participant impact that may be attributable to different HPOG program components and models. The impact study design is a classic experiment in which eligible applicants for HPOG program services will be randomly assigned to a treatment group offered participation in HPOG and a control group not offered the opportunity to enroll in HPOG.

To achieve these goals, it is necessary to collect data about both treatment group and control group sample members before enrollment into the HPOG program. The information collection proposed will supplement internet-based collection of information from HPOG grantees on baseline characteristics of eligible program participants. This 30-day notice describes the universe of data collection efforts for this study. However, this information collection request is limited to the Supplemental Baseline Questions (for program participants and control group members) described under 1 below. As part of this submission, we are also requesting permission to waive 60-day notices necessary for future and follow-up surveys (described under 2–6 below).

The universe of information collection proposed for HPOG–Impact includes:

1. Supplemental Baseline Questions (for program participants and control group members). This survey will augment data already colleated about eligible program applicants through the Performance Reporting System (PRS) that currently is being used in the Implementation, Systems and Outcome Evaluation of the TANF and Low-Income Health Profession Opportunity Grants (OMB Control No. 0970–0394). To reduce burden to the extent possible, HPOG-Impact will use data from the PRS. The 15-minute ''supplemental survey'' will collect any additional information necessary for HPOG–Impact and will be administered prior to random assignment.

2. 12-Month Follow-up Survey. This survey will be administered approximately 12 months after baseline to both treatment and control group members. It will collect data about program experiences and outcomes of interest, including certifications and educational achievements, job placement, wages, and benefits. It also will collect some information about participants' tenure and experience in HPOG programming.

3. Grantee Survey. This survey will be administered to all HPOG grantees participating in HPOG-Impact, will collect information on characteristics of HPOG programs and will be used to classify grantees and to identifying distinct service delivery models.

4. Case studies of selected HPOG grantees. Through site visits, site research staff will also use structured observations and staff and management interviews to validate the results of the Grantee Survey.

5. 30–3-Month Follow-up Survey. This survey will be administered approximately 30 months after baseline to both treatment and control group members. It will collect updated information about outcomes of interest, including certifications and educational achievements, job placement, wages, and benefits.

6. Follow up data collection on children of study participants. Data on child outcomes that may be associated with parental impacts tied to program participation and components will be collected at follow-up. Data collection will vary depending on children's ages.

Respondents: Individuals enrolled in HPOG interventions; control group members.

ANNUAL BURDEN ESTIMATES

Instrument	Annual number of respondents	Number of responses per respondent	Average burden hours per response	Total burden hours
HPOG Performance Reporting System (PRS) (previously approved).	32	2	31.2	1,997
Supplemental Baseline Questions (program participants and control group members)	5,125	1	0.25	1,281
Supplemental Baseline Questions (grantees)	32	160	0.25	1,280

Estimated Total Annual Burden Hours: 4,558.

Additional Information:

Copies of the proposed collection may be obtained by writing to the Administration for Children and Families, Office of Planning, Research and Evaluation, 370 L'Enfant Promenade, SW., Washington, DC 20447, Attn: OPRE Reports Clearance Officer. All requests should be identified by the title of the information collection. Email address: *OPREinfocollection@acf.hhs.gov*

OMB Comment:

OMB is required to make a decision concerning the collection of information between 30 and 60 days after publication of this document in the **Federal Register**. Therefore, a comment is best assured of having its full effect if OMB receives it within 30 days of publication. Written comments and recommendations for the proposed information collection should be sent directly to the following:

Office of Management and Budget, Paperwork Reduction Project, Email: *OIRA SUBMISSION@OMB.E0P.GOV,* Attn: Desk Officer for the Administration, for Children and Families.

Steven M. Hanmer,

OPRE Reports Clearance Officer.

[FR Doc. 2012–14656 Filed 6–15–12; 8:45 am]

BILLING CODE 4184–09–M

DEPARTMENT OF HEALTH AND HUMAN SERVICES

Food and Drug Administration

[Docket No. FDA–2012–N–0011]

Academic Development of a Training Program for Good Laboratory Practices in High Containment Environments (U24)

AGENCY: Food and Drug Administration, HHS.

ACTION: Notice.

SUMMARY: The Food and Drug Administration (FDA) is announcing the availability of grant funds for the support of a Funding Opportunity Announcement (FOA) entitled ''Academic Development of a Training Program for Good Laboratory Practices in High Containment Environments (U24).'' In this FOA, FDA announces its intention to accept and consider a single source application for an award to the University of Texas Medical Branch (UTMB) Galveston National Laboratory (GNL) for the development and implementation of a certified, academic training course for instruction in Good Laboratory Practices (GLP) in a Biosafety Level (BSL) 4 High Containment Environment. FDA seeks to support an effort to design a robust, collaborative, and educational program using problem-based learning techniques designed to bring researchers and regulators together to educate each other on the challenges related to these issues and to identify solutions that are acceptable from both scientific and regulatory perspectives.

DATES: Important dates are as follows:

1. The application due date is July 16, 2012.
2. The anticipated start date is September 15, 2012.
3. The opening date is June 18, 2012.
4. The expiration date is July 17, 2012.

ADDRESSES: Submit the paper application to: Gladys Melendez Bohler, Office of Acquisitions and Grants Services (HFA–500), 5630 Fishers Lane, rm. 1078, Rockville, MD 20857, 301–827–7175, email: *gladys.bohler@fda.hhs.gov*. For more information, see section III of the **SUPPLEMENTARY INFORMATION** section of this notice.

FOR FURTHER INFORMATION CONTACT: CAPT. Estella Jones, Office of the Chief Scientist, Food and Drug Administration, Bldg. 32, rm. 4130, Silver Spring, MD 20993, 301–796–0742, Email: *estella.jones@fda.hhs.gov.;* or

Lisa Hensley, Office of Counterterrorism and Emerging Threats, Food and Drug Administration, Bldg. 32, rm. 4128, Silver Spring, MD 20993, 301–796–8518, Email: *lisa.hensley@fda.hhs.gov.;* or

Gladys Melendez Bohler, Office of Acquisitions and Grants Services (HFA–500), 5630 Fishers Lane, rm. 1078, Rockville, MD 20857, 301–827–7175, Email: *gladys.bohler@fda.hhs.gov.*

For more information on this funding opportunity announcement (FOA) and to obtain detailed requirements, please refer to the full FOA located at *http://www.fda.gov/EmergencyPreparedness/MedicalCountermeasures/default.htm.*

SUPPLEMENTARY INFORMATION:

I. Funding Opportunity Description

Request for Application: RFA–FD–12–024

Catalog of Federal Domestic Assistance: 93.103

A. Background

FDA's Office of Counterterrorism and Emerging Threats (OCET) is a leader and active participant in the public health community and with the military defense community, helping to advance the development, evaluation, and approval of medical countermeasures to be used against threats involving chemical, biological, radiological, or nuclear (CBRN) agents. In 2010, FDA launched its Medical Countermeasures initiative (MCMi) in response to a report by the Secretary of the Department of Health and Human Services to assess the our nation's emergency readiness and in answer to a charge by President Obama to improve our nation's capacity to respond faster and more effectively to CBRN and emerging infectious disease threats—such as pandemic influenza. OCET was tasked with leading the implementation of the MCMi. OCET's activities are informed by the knowledge that protecting the civilian public and the warfighter against CBRN agents is a national security priority. A significant area of engagement for OCET is its support of innovative science to advance CBRN countermeasure development with the goal of improving access to safe and effective medical countermeasures, should the need arise. These efforts are central to strengthening national preparedness and security.

The ''Animal Rule'' (21 CFR 314.600 for drugs; 21 CFR 601.9 for biological products) permits animal models to be

used to test the effectiveness of a product when testing in humans is neither possible nor feasible. Under the ''Animal Rule,'' pivotal efficacy studies must be conducted in accordance with Good Laboratory Practice (GLP) regulations (21 CFR part 58). Biological threats, such as Ebola virus, Marburg virus, Variola virus, or Lassa fever virus, for which medical countermeasures are needed, require testing in high and maximum biosecurity level (BSL–4) laboratories. These laboratory environments pose daunting challenges to a researcher's ability to meet the requirements of GLP regulations. There has been tremendous progress in the development of candidate interventions over the last decade. However, to date there is not a single facility that is capable of performing pivotal studies under GLP at BSL–4. To break the current choke point in the development process for interventions against agents requiring maximum containment, it will be critical for laboratories with BSL–4 capacity to receive the training and develop the capability necessary to routinely perform pivotal studies in accordance with GLP.

OCET seeks to support an effort to design a robust, collaborative, and educational program using problem-based learning techniques designed to bring researchers and regulators together to educate each other on the challenges related to these issues and to identify solutions that are acceptable from both scientific and regulatory perspectives.

1. GLP Natural History Studies in BSL–4 Laboratories

Natural history studies are performed to establish the dose of the disease agent, the route of exposure, and to study the pathogenicity of the disease agent in the animal model. Results of these studies help determine which animal model best describes the disease in humans. Acceptance of results of these studies for regulatory decision-making is contingent upon these studies being conducted in accordance with GLP. Examples of challenges in meeting GLP requirements include appropriate data recording, record keeping, inspections, and equipment validation. Training on the development of strategies to meet GLP requirements in high and maximum biocontainment laboratories can be realized when everyone has a common understanding of the challenges and requirements. In such a case, the scientific validity and regulatory acceptance of a study can be ensured early on, reducing the need for repeat studies, thereby reducing the numbers of animals needed to address the scientific and regulatory objectives. Once the natural history of the disease in the animal model has been established, it can be used to test the efficacy of antibiotics, vaccine, or other therapies as described in the ''Animal Rule.''

2. GLP Animal Efficacy Studies in BSL–4 Laboratories

Animal efficacy studies are performed in accordance with the ''Animal Rule'' to test the effectiveness of a medical countermeasure against a specific threat agent in an animal model that best models the disease in humans. Results from these studies also help determine the dose of the medical countermeasure that will be effective in humans. Acceptance of efficacy study results for regulatory decision-making is also contingent upon meeting GLP requirements. To date, three countermeasure products have been FDA approved using ''Animal Rule''-type studies in support of efficacy.

B. Research Objectives

1. The Role of the University of Texas Medical Branch, Galveston National Laboratory

The University of Texas Medical Branch, Galveston National Laboratory (UTMB–GNL) is globally renowned for educational excellence in the sciences, medicine and research, as well as for its Laboratory Biosafety Training Program (LBTP). The LBTP courses are designed to provide training for laboratorians working at BSL–2 through BSL–4 levels. UTMB's Institutional Office of Regulated Nonclinical Studies (ORNcS) provides oversight for regulated studies and regulatory operations. In addition to the LBTP courses, the ORNcS offers an extensive, high-quality GLP training program to support faculty and staff at UTMB that are conducting nonclinical studies to support product licensure, including nonclinical studies conducted in BSL–3 and BSL–4 laboratories. ORNcS and OCET concur that an educational gap exists regarding the performance challenges of conducting GLP compliant studies in (A)BSL3/4 environments. Both have identified the need for an educational opportunity designed to better link GLP regulatory requirements with BSL–4 laboratory work to increase the efficiency of FDA data review and subsequently facilitate approval of medical countermeasures.

2. Project Description

This project represents a collaborative effort between OCET, the UTMB–GNL, and UTMB ORNcS to support scientific and regulatory collaboration and enhance regulatory science to advance the development of safe and effective antibiotics, vaccines, and other medical countermeasures for use by civilian and military personnel in response to CBRN threat agents. The goal is to develop training strategies for scientists to foster a thorough understanding of the challenges and establish collaborative classroom environments to find solutions for overcoming hurdles. A common understanding of the challenges and requirements can lead to scientific validity and early regulatory acceptance of a study, reducing the need for repeat studies, thereby reducing the numbers of animals needed to address the scientific and regulatory objectives. Empowered with knowledge of how to successfully meet GLP requirements in high and maximum biocontainment, scientists working in this environment and FDA staff who will be evaluating applications will be better able to link GLP regulatory requirements with BSL–4 laboratory work, thus increasing the quality of the data and the efficiency of data review, subsequently facilitating approval of medical countermeasures. This project will also lead to improved technical cooperation between FDA and the regulated institutions conducting GLP research in maximum biocontainment. The project has the following goals:

a. *Mutual understanding.* Progress in the development of animal models for efficacy testing of medical countermeasures has been very slow as developers struggle to design and conduct studies that meet scientific objectives and regulatory requirements for approval. Progress is further slowed as developers are sometimes at a loss with regard to how to satisfy GLP requirements when conducting studies in maximum biocontainment conditions. Currently, FDA's Basic Bioresearch Monitoring training program used to train field inspectors who inspect laboratories for GLP compliance lacks specific guidance for inspection of BSL–3 or BSL–4 laboratories that conduct GLP studies. OCET and ORNcS believe one way to foster progress on this issue is by gathering researchers and regulators together in a nonthreatening educational environment to identify the challenges and needs, then work together to find solutions.

b. *Develop collaborations.* The training opportunity will bring together the community of researchers involved in conducting research in high and maximum biocontainment laboratories, who are also interested in conducting ''animal rule'' studies and animal qualification studies to support medical countermeasure development and

approval. In some cases, similar research is being conducted in different laboratories for the same medical countermeasure need. Participants will be encouraged to share experiences and join in collaborations to prevent duplication of research and avoid repetition of failed efforts and otherwise join in support of each other to attain shared goals and facilitate countermeasure development and approval.

3. Continuing Education—Areas of Focus

a. *GLP in high and maximum containment.*—This portion of the training will be a joint UTMB/FDA effort, with UTMB providing the course foundation and FDA offering the field inspector perspective. Lecture examples would include a GLP Refresher, Good Documentation practices, Internal GLP Audits, Equipment Validation and Calibration, and Effective SOPs. Lectures could be followed with practical exercises pointing out specific challenges in meeting GLP requirements that have been encountered in BSL–3 and BSL–4 studies conducted at UTMB.

b. *The ''Animal Rule.''*—FDA will provide an overview of the regulations for approval of new drugs and biologics based on evidence of effectiveness from studies in animals, including the status of FDA's draft document entitled, ''Guidance for Industry: Animal Models—Essential Elements to Address Efficacy Under the Animal Rule'' dated January 2009 (Draft Guidance) and the animal model qualification process.

c. *Animal welfare.*—This portion of the training will review animal welfare laws, policies guidelines and requirements, including lectures and discussions on the role of the veterinarian, determination of humane endpoints, and use of supportive care measures in BSL–4 studies.

d. *Telemetry.*—Use of telemetry for remote monitoring of routine clinical parameters, such as body temperature, heart rate, respiration rate, and blood pressure is a helpful and sometimes an essential tool for conducting studies in BSL–4 laboratories. An entire half-day will be devoted to teaching what is available and how to implement telemetry techniques into BSL–4 studies.

4. Dissemination of Successful Enhancements to the Regulatory Science and Regulation of Animal Rule Studies for Medical Countermeasure Development

UTMB and OCET will collaborate to incorporate any new FDA guidances and educational tools into the training program as new measures are developed (e.g., drug development tool guidance, updates to GLPs).

C. Eligibility Information

As work in regulatory science for medical countermeasure development progresses, OCET and UTMB anticipate additional collaboration through seminars and training programs, particularly in the areas of GLP in maximum and high biocontainment laboratories, training FDA field inspectors how to effectively conduct GLP inspections in a high or maximum biocontainment laboratories, and training laboratorians and regulators in how to work in high or maximum biocontainment laboratories. With the financial and scientific support from FDA, UTMB is uniquely qualified to undertake these activities, given its mandate as an educational and scientific institution, its high visibility as a pioneer in implementing GLP in maximum and high biocontainment laboratories, and its access to worldwide scientific and regulatory expertise. UTMB has demonstrated a GLP reporting structure and large animal in vivo GLP BSL–4 expertise. In addition, the FDA/UTMB training program will be accessible to researchers at all other university, government, and private organizations.

II. Award Information/Funds Available

A. Award Amount

Only one award will be made.

OCET anticipates providing in FY2012 up to $150,000 (total costs include direct and indirect costs) for one award subject to availability of funds in support of this project. The possibility of four additional years of support up to $600,000 of funding is contingent upon successful performance and the availability of funds.

B. Length of Support

The timeframe for this project is 5 years from the award date of the initial application.

III. Paper Application, Registration, and Submission Information

To submit a paper application in response to this FOA, applicants should first review the full announcement located at (*http://www.fda.gov/EmergencyPreparedness/Medical Countermeasures/default.htm*). (FDA has verified the Web site addresses throughout this document, but FDA is not responsible for any subsequent changes to the Web sites after this document publishes in the **Federal Register**). Persons interested in applying for a grant may obtain an application at *http://grants2.nih.gov/grants/funding/phs398/phs398.html.* For all paper application submissions, the following steps are required:

- *Step 1:* Obtain a Dun and Bradstreet (DUNS) Number.
- *Step 2:* Register With Central Contractor Registration.
- *Step 3:* Register With Electronic Research Administration (eRA) Commons.

Steps 1 and 2, in detail, can be found at *http://www07.grants.gov/applicants/organization_registration.jsp.* Step 3, in detail, can be found at *https://commons.era.nih.gov/commons/registration/registrationInstructions.jsp*. After you have followed these steps, submit paper applications to: Gladys Melendez Bohler, Office of Acquisitions and Grants Services (HFA–500), 5630 Fishers Lane, Rm. 1078, Rockville, MD 20857.

Dated: June 12, 2012.

Leslie Kux,

Assistant Commissioner for Policy.

[FR Doc. 2012–14741 Filed 6–15–12; 8:45 am]

BILLING CODE 4160–01–P

DEPARTMENT OF HEALTH AND HUMAN SERVICES

Food and Drug Administration

[Docket No. FDA–2012–N–0194]

Agency Information Collection Activities; Submission for Office of Management and Budget Review; Comment Request; Biosimilars User Fee Cover Sheet; Form FDA 3792

AGENCY: Food and Drug Administration, HHS.

ACTION: Notice.

SUMMARY: The Food and Drug Administration (FDA) is announcing that a proposed collection of information has been submitted to the Office of Management and Budget (OMB) for review and clearance under the Paperwork Reduction Act of 1995.

DATES: Fax written comments on the collection of information by July 18, 2012.

ADDRESSES: To ensure that comments on the information collection are received, OMB recommends that written comments be faxed to the Office of Information and Regulatory Affairs, OMB, Attn: FDA Desk Officer, FAX: 202–395–7285, or emailed to *oira_submission@omb.eop.gov*. All comments should be identified with the OMB control number 0910–New and title ''Biosimilars User Fee Cover Sheet; Form FDA 3792''. Also include the FDA

docket number found in brackets in the heading of this document.

FOR FURTHER INFORMATION CONTACT: Juanmanuel Vilela, Office of Information Management, Food and Drug Administration, 1350 Piccard Dr., PI50–400B, Rockville, MD 20850, 301–796–7651, *juanmanuel.vilela@fda.hhs.gov.*

SUPPLEMENTARY INFORMATION: In compliance with 44 U.S.C. 3507, FDA has submitted the following proposed collection of information to OMB for review and clearance.

Biosimilars User Fee Cover Sheet; Form FDA 3792—(OMB Control Number 0910-New)

The March 23, 2010 Affordable Care Act contains a subtitle called the Biologics Price Competition and Innovation Act of 2009 (BPCI Act) that amends the Public Health Service Act (PHS Act) and other statutes to create an abbreviated approval pathway for biological products shown to be biosimilar to or interchangeable with an FDA-licensed reference biological product. Section 351(k) of the PHS Act, added by the BPCI Act, allows a company to submit an application for licensure of a biosimilar or interchangeable biological product. The BPCI Act also amends section 735 of the Federal Food, Drug, and Cosmetic Act (FD&C Act) (21 U.S.C. 379g) to include 351(k) applications in the definition of ''human drug application'' for the purposes of the prescription drug user fee provisions. The authority conferred by the FD&C Act's prescription drug user fee provisions expires in September 2012. The BPCI Act directs FDA to develop recommendations for a biosimilar biological product user fee program for FYs 2013 through 2017. FDA's recommendations for a biosimilar biological product user fee program were submitted to Congress on January 13, 2012. If enacted into law, FDA's proposed biosimilar biological product user fee program would require FDA to assess and collect user fees for certain meetings concerning biosimilar biological product development (BPD meetings), investigational new drug applications (INDs) intended to support a biosimilar biological product application, and biosimilar biological product applications and supplements. Proposed Form FDA 3792, the Biosimilars User Fee Cover Sheet, requests the minimum necessary information to determine the amount of the fee required, and to account for and track user fees. The form would provide a cross-reference of the fees submitted for a submission with the actual submission by using a unique number tracking system. The information collected would be used by FDA's Center for Drug Evaluation and Research (CDER) and Center for Biologics Evaluation and Research (CBER) to initiate the administrative screening of biosimilar biological product INDs, applications, and supplements, and to account for and track user fees associated with BPD meetings.

In the **Federal Register** of March 13, 2012 (77 FR 14809), FDA published a 60-day notice requesting public comment on the proposed collection of information, Form FDA 3792, the Biosimilar User Fee Cover Sheet. FDA received the following comments:

(Comment 1) Suggests FDA use the term ''Biosimilar Biological Product Licensing Application (BBLA)'' or ''Interchangeable Biosimilar Biological Product Application (IBLA)'' for a biosimilar application instead of Biologics License Application (BLA) to avoid confusion and provide greater clarity.

(Response) FDA notes the Biosimilar User Fee Cover Sheet serves a billing and collections purpose, and does not indicate FDA's position on reference terms. However, to maintain consistency throughout the document and avoid any confusion, FDA refers to a biologics license application submitted under section 351(k) of the Public Health Service Act as a ''351(k) application''. Under FDA's proposed biosimilar biological product user fee program, user fees would be assessed only for those 351(k) applications that fall within the scope of the defined term ''biosimilar biological product application.'' Accordingly, FDA has made changes to the Biosimilar User Fee Cover Sheet to clarify that Form 3792 need not be submitted for certain specified types of 351(k) applications. Additionally, to address the need for greater clarity, FDA has added definitions of several other key terms to the Biosimilar User Fee Cover Sheet.

(Comment 2) Requests FDA to ask for all available product names, including the product's code name in addition to trade and proper names, because the Biosimilar User Fee Cover Sheet should be consistent with Form FDA 1571. Further, requests FDA to amend the ''Product Name'' information field to ''Product Name(s).''

(Response) We agree that the Biosimilar User Fee Cover sheet should be consistent with Form 1571, where applicable. Accordingly, FDA amended the instructions to request proper name, trade or proprietary name, and code name, as applicable, and amended the ''Product Name'' information field to ''Product Name(s)''.

(Comment 3) Requests FDA to remove the question about whether the application requires clinical data, other than comparative bioavailability studies, for approval because this information does not affect the fee amount.

(Response) FDA notes this question applies only to fees for biosimilar biological product applications, and not to fees for biosimilar biological products in development. Under FDA's proposed biosimilar biological product user fee program, the fee amount for a biosimilar biological product application depends on whether clinical data with respect to safety or effectiveness are required. Specifically:

- A full fee is assessed for a biosimilar biological product application for which clinical data (other than comparative bioavailability studies) with respect to safety or effectiveness are required for approval;
- A half fee is assessed for a biosimilar biological product application for which clinical data (other than comparative bioavailability studies) with respect to safety or effectiveness are not required for approval;
- A half fee is assessed for a supplement for which clinical data (other than comparative bioavailability studies) with respect to safety or effectiveness are required for approval; and
- No fee is assessed for a supplement for which clinical data (other than comparative bioavailability studies) with respect to safety or effectiveness are not required for approval.

Therefore, FDA has retained the question on the Biosimilar User Fee Cover Sheet concerning whether clinical data are required because it requests information necessary to determine the fee amount for a biosimilar biological product application or supplement.

(Comment 4) Requests FDA to decline to require a patent certification as part of a 351(k) application.

(Response) FDA notes this comment is outside the scope of the proposed collection of information, Form FDA 3792, the Biosimilar User Fee Cover Sheet.

FDA estimates the burden of this collection of information as follows:

TABLE 1—ESTIMATED ANNUAL REPORTING BURDEN [1]

Form	Number of respondents	Number of responses per respondent	Total annual responses	Average burden per response	Total hours
FDA 3792	9	1	9	0.5 (30 minutes)	4.5

[1] There are no capital costs or operating maintenance costs associated with this collection of information.

Respondents to this proposed collection of information would be manufacturers of biosimilar biological product candidates. Based on FDA's database system, there are an estimated 18 manufacturers that fall into this category. However, not all manufacturers will have submissions in a given year and some may have multiple submissions. FDA estimates 9 annual responses that include the following: 6 INDs or BPD meetings, 2 applications, and 1 supplement. The estimated hours per response are based on FDA's past experience with other submissions, which average 30 minutes.

Dated: June 12, 2012.

Leslie Kux,

Assistant Commissioner for Policy.

[FR Doc. 2012–14740 Filed 6–15–12; 8:45 am]

BILLING CODE 4160–01–P

DEPARTMENT OF HEALTH AND HUMAN SERVICES

Office of Inspector General

[Docket Number OIG–1301–N]

Solicitation of Information and Recommendations for Revising OIG's Provider Self-Disclosure Protocol

AGENCY: Office of Inspector General (OIG), HHS.

ACTION: Notice and Opportunity for Comment.

SUMMARY: This **Federal Register** notice informs the public that OIG: (1) Intends to update the Provider Self-Disclosure Protocol (63 FR 58399, October 30, 1998) and (2) solicits input from the public for OIG to consider in updating the Protocol.

DATES: To ensure consideration, public comments must be delivered to the address provided below by no later than 5 p.m. on August 17, 2012.

ADDRESSES: In commenting, please refer to file code OIG–1301–N. Because of staff and resource limitations, we cannot accept comments by facsimile (FAX) transmission.

You may submit comments in one of three ways (no duplicates, please):

1. *Electronically.* You may submit electronic comments on specific recommendations and proposals through the Federal eRulemaking Portal at *http://www.regulations.gov.*

2. *By regular, express, or overnight mail.* You may send written comments to the following address: Kenneth D. Kraft, Office of Inspector General, Department of Health and Human Services, Attention: OIG–1301–N, Room 5541B, Cohen Building, 330 Independence Avenue SW., Washington, DC 20201. Please allow sufficient time for mailed comments to be received before the close of the comment period.

3. *By hand or courier.* If you prefer, you may deliver, by hand or courier, your written comments before the close of the comment period to Kenneth D. Kraft, Office of Inspector General, Department of Health and Human Services, Cohen Building, 330 Independence Avenue SW., Washington, DC 20201. Because access to the interior of the Cohen Building is not readily available to persons without Federal Government identification, commenters are encouraged to schedule their delivery with one of our staff at (202) 708–9848.

All submissions must include the agency name and docket number for this **Federal Register** document. All comments, including attachments and other supporting material received, are subject to public disclosure.

FOR FURTHER INFORMATION CONTACT: Kenneth D. Kraft, Department of Health and Human Services, Office of Inspector General, Office of External Affairs, at (202) 708–9848.

SUPPLEMENTARY INFORMATION: *Inspection of Public Comments:* All comments received before the end of the comment period are available for viewing by the public. All comments will be posted on *http://www.regulations.gov* after they have been received. Comments received timely will also be available for public inspection as they are received at Office of Inspector General, Department of Health and Human Services, Cohen Building, 330 Independence Avenue SW., Washington, DC 20201, Monday through Friday of each week from 8:30 a.m. to 4 p.m. To schedule an appointment to view public comments, phone (202) 708–9848.

Background: In 1998, OIG published the Provider Self-Disclosure Protocol (the Protocol) to establish a process for health care providers to disclose potential fraud involving the Federal health care programs. The Protocol provides guidance on how to investigate this conduct, quantify damages, and report the conduct to OIG to resolve the provider's liability exposure under OIG's civil money penalty (CMP) authorities. Over the past 14 years, we have resolved over 800 disclosures, resulting in recovering over $280 million to the Federal health care programs. Through our experience in resolving Protocol matters, we identified areas where additional guidance would be beneficial to the provider community and would improve the efficient resolution of Protocol matters. Specifically, we issued three Open Letters to Health Care Providers to address some of these issues. First, in 2006 we announced an initiative to encourage disclosure of conduct creating liability under OIG's anti-kickback and physician self-referral law CMP authorities. In 2008, we issued additional guidance and requirements for Protocol submissions to increase the efficiency of the Protocol, including new requirements for the initial submission and specific time commitments from the provider. This Open Letter also announced the presumption of not requiring a compliance agreement as part of settling a cooperative and complete disclosure. Finally, in 2009, we stated we would no longer accept disclosure of a matter into the Protocol that involved only liability under the physician self-referral law in the absence of a colorable anti-kickback violation. We also announced a minimum $50,000 settlement amount for kickback-related submissions.

After over a decade of experience in resolving Protocol disclosures, we are considering revising the Protocol to provide additional guidance. We are soliciting comments, recommendations, and other suggestions from concerned parties and organizations on how best to revise the Protocol to address relevant issues and to provide useful guidance to the health care industry.

Dated: June 8, 2012.

Daniel R. Levinson,

Inspector General.

[FR Doc. 2012–14585 Filed 6–15–12; 8:45 am]

BILLING CODE 4152–01–P

DEPARTMENT OF HEALTH AND HUMAN SERVICES

National Institutes of Health

Government-Owned Inventions; Availability for Licensing

AGENCY: National Institutes of Health, Public Health Service, HHS.

ACTION: Notice.

SUMMARY: The inventions listed below are owned by an agency of the U.S. Government and are available for licensing in the U.S. in accordance with 35 U.S.C. 207 to achieve expeditious commercialization of results of federally-funded research and development. Foreign patent applications are filed on selected inventions to extend market coverage for companies and may also be available for licensing.

FOR FURTHER INFORMATION CONTACT: Licensing information and copies of the U.S. patent applications listed below may be obtained by writing to the indicated licensing contact at the Office of Technology Transfer, National Institutes of Health, 6011 Executive Boulevard, Suite 325, Rockville, Maryland 20852–3804; telephone: 301–496–7057; fax: 301–402–0220. A signed Confidential Disclosure Agreement will be required to receive copies of the patent applications.

Endothelial Cell Line To Study Prevention of Atherosclerosis

Description of Technology: Atherosclerosis underlies most cases of cardiovascular disease (CVD), which is now the major cause of morbidity and mortality in developed countries. An inflammatory reaction is an essential component in the appearance and development of an atherosclerotic lesion. The inflammatory process is associated with the expression of adhesion molecules such as vascular cell adhesion molecule (VCAM) at the surface of endothelial cells. Antiatherogenic lipoprotein, high density lipoprotein (HDL), is known to down regulate the expression of VCAM. Increasing levels of HDL is a promising way to reduce the risk of CVD.

This technology is directed to the generation of a stable endothelial cell line expressing a luciferase reporter construct driven by the VCAM promoter. This reporter system enables an easier measurement of VCAM expression and determination of the effect of HDL on endothelial cell inflammation. This technology can be used to screen for the effect of drugs that modulate HDL metabolism and it is more convenient than doing Western blots.

Potential Commercial Applications:

- Study of prevention of atherosclerosis
- Screen serum for the effect of HDL on endothelial cell inflammation
- Screen for the effect of drugs that modulate HDL metabolism

Competitive Advantages:

- Easy monitoring of down regulation of VCAM with luciferase
- More convenient than doing Western blots

Development Stage: In vitro data available.

Inventor: Alan T. Remaley (NHLBI).

Publication: D'Souza W, *et al.* Structure/function relationships of apolipoprotein a-I mimetic peptides: Implications for antiatherogenic activities of high-density lipoprotein. Circ Res. 2010 Jul 23;107(2):217–27. [PMID 20508181].

Intellectual Property: HHS Reference No. E–149–2012/0—Research Tool. Patent protection is not being pursued for this technology.

Licensing Contact: Fatima Sayyid, M.H.P.M.; 301–435–4521; *Fatima.Sayyid@nih.hhs.gov.*

Collaborative Research Opportunity: The Cardiovascular & Pulmonary Branch, NHLBI/NIH, is seeking statements of capability or interest from parties interested in collaborative research to further develop, evaluate or commercialize endothelial cells to study prevention of atherosclerosis. For collaboration opportunities, please contact Dr. Alan Remaley at *aremaley1@cc.nih.gov.*

Software for Modeling Tumor Delivery and Penetration of Antibody-Toxin Anti-Cancer Conjugates

Description of Technology: Available for licensing is software for modeling permeability and concentration of intravenously administered antibody anti-cancer agent conjugates in solid tumor. The models can be used to determine optimal dosing regimen of a therapeutic in a particular cancer type. Thirty factors that affect delivery rates and efficiencies are analyzed as variables in generating the models.

Potential Commercial Applications:

- Drug Design
- Combination Therapy
- Personalized Medicine

Competitive Advantages:

- Accurate permeability modeling of anti-cancer therapeutics
- Personalized Medicine

Development Stage:

- Early-stage
- Pre-clinical

Inventors: Byungkook Lee (NCI), Youngshang Pak (EM), Ira Pastan (NCI).

Publications:

1. Fujimori K, *et al.* A modeling analysis of monoclonal antibody percolation through tumors: a binding-site barrier. J Nucl Med. 1990 Jul;31(7):1191–1198. [PMID 2362198]
2. Jain RK. Delivery of molecular and cellular medicine to solid tumors. Adv Drug Deliv Rev. 2001 Mar 1;46(1–3):149–168. [PMID 11259838]
3. Thurber GM, *et al.* Antibody tumor penetration: transport opposed by systemic and antigen-mediated clearance. Adv Drug Deliv Rev. 2008 Sep;60(12):1421–1434. [PMID 18541331]
4. Li Y, *et al.* Delivery of nanomedicines to extracellular and intracellular compartments of a solid tumor. Adv Drug Deliv Rev. 2012 Jan;64(1):29–39. [PMID 21569804]
5. *http://www.accelereyes.com/examples/drug_delivery_model*
6. Pak Y, *et al.* Antigen shedding may improve efficiencies for delivery of antibody-based anticancer agents in solid tumors. Can Res. 2012 May 4; Epub ahead of print, doi: 10.1158/0008–5472.CAN–11–3925. [PMID 22562466]

Intellectual Property: HHS Reference No. E–060–2012/0—Software. Patent protection is not being pursued for this technology.

Licensing Contact: Michael Shmilovich; 301–435–5019; *mish@codon.nih.gov.*

Collaborative Research Opportunity: The NCI, CCR, Laboratory of Molecular Biology is seeking statements of capability or interest from parties interested in collaborative research to further develop, evaluate or commercialize targeted delivery of anti-cancer agents in solid tumors. For collaboration opportunities, please contact John Hewes, Ph.D. at *hewesj@mail.nih.gov.*

Mouse Model of STAT5 for the Drug Screen and the Research of Cancer and Autoimmunity

Description of Technology: The invention is a STAT5 mutant mouse that can be used in research related to cancer, autoimmunity and infectious diseases as well as drug screening. The mouse model itself has multiple immunological defects resulting in formation of STAT5 dimers but not tetramers.

It reports that only a minority of IL–2-modulated genes is regulated by STAT5 tetramers. Therefore, selectively targeting tetramer formation might be a relatively specific therapeutic tool wherein one could modulate only part of the actions of a cytokine or growth factor, which allows a new therapeutic approach to modulating immune responses, controlling inflammation, and inhibiting tumor growth.

The STAT5 tetramer deficient mouse is an ideal tool to screen for tetramerization inhibitors that can be used for the treatment of cancer, autoimmunity and inflammation in addition to the basic research applications.

Potential Commercial Applications:

• To design and screen tetramerization inhibitors that are potential new drugs for cancer, autoimmunity and transplantation.

• To identify and study a key subset of STAT5A and/or STAT5B-dependent genes without affecting viability is extremely.

• To seek a new therapeutic approach to modulating immune responses, controlling inflammation, and inhibiting tumor growth.

Competitive Advantages:

• The tetramer-deficient mice of this invention are viable while mice completely lacking expression of Stat5a and Stat5b exhibit perinatal lethality.

• A model for basic research, to study the cancer, autoimmunity, and infectious diseases associated with STAT5 signaling.

Inventors: Warren J. Leonard and Jian-Xin Lin (NHLBI)

Publication: Lin JX, *et al.* Critical role of STAT5 transcription factor tetramerization for cytokine responses and normal immune function. Immunity. 2012 Apr 20;36(4):586–99. [PMID 22520852]

Intellectual Property: HHS Reference No. E–080–2011/0—Research Tool. Patent protection is not being pursued for this technology.

Licensing Contact: Susan Ano, Ph.D.; 301–435–5515; *anos@mail.nih.gov.*

Fast Acting Molecular Probes for Real-Time In Vivo Study of Disease and Therapeutics

Description of Technology: This technology is for fast acting molecular probes made from a fluorescent quencher molecule, a fluorophore, an enzyme cleavable oligopeptide (for example targeted by protease) and FDA-approved polyethylene glycol (PEG) as well as associated methods to identify cell activity with these probes. Proteases regulate many cell processes such as inflammation as well as pathological processes in cancer and cardiovascular disease. High protease activity is associated with metastatic cancers. Proteases are also active in apoptosis, and tissue remodeling in cardiovascular disease. Although highly useful *in vitro,* conventional probes are unstable, nonspecific or slow activating *in vivo.* This new probe is faster than standard probes (30 min vs. 24 hrs) and has enhanced target-to background ratios. It enables quick screening of animals in an array of applications related to protease-associated diseases and other diseases. It may detect specific biological targets and monitor *in vivo* therapeutic efficacy in real time. Most drug candidates identified by *in vitro* screening fail *in vivo.* Failures are costly. Identifying *in vivo* drug efficacy sooner would reduce waste and increase successful drug development.

Potential Commercial Applications:

• Diagnostics

• In vivo therapeutic monitoring

Competitive Advantages:

• Faster than standard probes

• Enhanced target-to-background ratios

• Allows in vivo therapeutic efficacy study in real time

Development Stage:

• Early-stage

• Pre-clinical

• In vivo data available (animal)

Inventors: Xiaoyuan (Shawn) Chen, Seulki Lee, Lei Zhu (all of NIBIB)

Publications:

1. Lee S, *et al.* Polymeric nanoparticle-based activatable near-infrared nanosensor for protease determination in vivo. Nano Lett. 2009;9(12):4412–6. [PMID 19842672]
2. Lee S, *et al.* Activatable molecular probes for cancer imaging. Curr Top Med Chem. 2010;10(11):1135–44. [PMID 20388112]

Intellectual Property: HHS Reference No. E–079–2011/0—U.S. Provisional Application No. 61/533,014 filed 09 Sep 2011

Licensing Contact: Tedd Fenn; 301–435–5031; *Tedd.Fenn@nih.gov.*

Collaborative Research Opportunity: The National Institute of Biomedical Imaging and Bioengineering is seeking statements of capability or interest from parties interested in collaborative research to further develop, evaluate or commercialize fast acting molecular probes for real-time *in vivo* study of disease and therapeutics. For collaboration opportunities, please contact Cecilia Pazman at *pazmance@nhlbi.nih.*

New Ammunition to Fight Cancer: The Rapid Isolation of Central Memory T Cells for Adoptive Immunotherapy

Description of Technology: This technology is a new technique to rapidly isolate tumor-reactive central memory T cells in a highly enriched, non-invasive manner from the peripheral blood of cancer patients for cancer adoptive cell immunotherapy. Cells are drawn from a patient's blood, divided into subsets, and contacted with the tumor antigen of interest to identify T cells whose T cell receptor (TCR) recognizes the tumor antigen. Such T cells are identified by measuring the levels of interleukin-2 (IL–2) and interferon-gamma (IFN-gamma) produced by the cells (i.e., the IL–2 index) using high-throughput quantitative PCR (HT-qPCR). NIH scientists have identified that cells with a specific IL–2 index consistently contain central memory T cells for the tumor antigen of interest.

Preclinical animal studies have suggested that central memory T cells can proliferate, persist, and survive better after adoptive transfer compared to other T cell types. They also show increased anti-cancer activity. Clinical trials using central memory T cells represent an important extension of these studies. Adoptive immunotherapy is showing promise as a cancer treatment, but one drawback to this method, prior to this invention, was the laborious and time consuming nature of the cell isolation process and the unpredictable and sometimes ineffective nature of the cells infused into patients.

Potential Commercial Applications:

• An improved adoptive immunotherapy approach to treat and/or prevent the recurrence of a variety of human cancers, infectious diseases, and autoimmune diseases by identifying central memory T cells to better fight these diseases.

• A valuable component to a combination therapy to treat diseases where improving immune response quality is critical, such as introducing central memory T cells into a vaccine regimen for longer term immune responses or to treat malignancies that thrive by circumventing the patient's immune system.

Competitive Advantages:

• Eliminate the need for invasive surgery to eliminate tumors.

• Isolate better cell cultures for adoptive immunotherapy than previously available.

• Predict and isolate central memory T cell populations consistently using the IL–2 index.

• Expands the number of patients where adoptive immunotherapy can become a cancer treatment option.

• Sensitive, efficient, and rapid approach to identify and isolate Central Memory T cells for various therapeutic applications.

Development Stage:

• Early-stage
• Pre-clinical
• Clinical
• In vitro data available
• In vivo data available (human)

Inventor: Udai S. Kammula (NCI)

Publication: Kammula US, Serrano OK. Use of high throughput qPCR screening to rapidly clone low frequency tumour specific T-cells from peripheral blood for adoptive immunotherapy. J Transl Med. 2008 Oct 20;6:60. [PMID 18937837]

Intellectual Property: HHS Reference No. E–228–2010/0—

• U.S. Provisional Patent Application No. 61/374,699 filed 18 Aug 2010
• PCT Patent Application No. PCT/US2011/047719 filed 15 Aug 2011

Related Technology: HHS Reference No. E–003–2000/0—

• U.S. Patent Application No. 12/866,919 filed 10 Aug 2010
• Foreign counterparts in Europe and Australia

Licensing Contact: Samuel E. Bish, Ph.D.; 301–435–5282; *bishse@mail.nih.gov.*

Collaborative Research Opportunity: The Center for Cancer Research, Surgery Branch, is seeking statements of capability or interest from parties interested in collaborative research to further develop, evaluate or commercialize this novel technology. For collaboration opportunities, please contact John Hewes, Ph.D. at *hewesj@mail.nih.gov.*

A_3 Adenosine Receptor Agonists To Treat Chemotherapy-Induced Peripheral Neuropathy

Description of Technology: This invention claims species-independent agonists of A_3AR, specifically (N)-methanocarba adenine nucleosides and related pharmaceutical compositions. The A_3 adenosine receptor (A_3AR) subtype has been linked with helping protect the heart from ischemia, controlling inflammation, and regulating cell proliferation. Agonists of the human A_3AR subtype have been developed that are also selective for the mouse A_3AR while retaining selectivity for the human receptor. This solves a problem for clinical development because animal model testing is important for pre-clinical validation of drug function. Novel agonists have been made that exhibit as much as 6000x selectivity for A_3 versus A_1 in humans while retaining at least 400x selectivity for A_3 versus A_1 in mice. In addition, the molecules of the invention exhibit very low nanomolar affinity. This innovation will not only facilitate moving A_3 agonists into the clinical phase of drug development by being more amenable to animal studies, but also provide much greater selectivity in humans, and thereby potentially fewer side effects than drugs currently undergoing clinical trials.

Potential Commercial Applications:

• Cardiac arrhythmias or ischemia
• Inflammation
• Stroke
• Diabetes
• Asthma
• Cancer
• Pain

Competitive Advantages: Oral dosing as these A_3AR agonists are selective and not associated with cardiac or hemodynamic effects that may result from stimulation of A_1 or A_2A receptors.

Development Stage:

• Early-stage
• In vivo data available (animal)

Inventors: Kenneth Jacobson and Dilip K. Tosh (NIDDK)

Publications:

1. Tosh DK, *et al.* Structure-guided design of A(3) adenosine receptor selective nucleosides: combination of 2-arylethynyl and bicyclo[3.1.0]hexane substitutions. J Med Chem. 2012 May 16; Epub ahead of print. [PMID 22559880]
2. Chen Z, *et al.* Controlling murine and rat chronic pain through A3 adenosine receptor activation. FASEB J. 2012 May;26(5):1855–65. [PMID 22345405]

Intellectual Property: HHS Reference No. E–140–2008/1—US Patent Application No. 13/371,081 filed 10 Feb 2012

Related Technologies:

• HHS Reference No. E–140–2008/0—US Patent Application No. 12/935,461 filed 01 Nov 2010
• HHS Reference No. E–285–2008/0—US Patent Application No. 13/056,997 filed 18 Mar 2011
• HHS Reference No. E–075–2012/0

Licensing Contact: Betty B. Tong, Ph.D.; 301–594–6565; *tongb@mail.nih.gov.*

Collaborative Research Opportunity: The National Institute of Diabetes and Digestive and Kidney Diseases is seeking statements of capability or interest from parties interested in collaborative research to further develop, evaluate or commercialize this technology. For collaboration opportunities, please contact Marguerite J. Miller at 301–496–9003 or *millermarg@niddk.nih.gov.*

Use of CD97 Alpha Subunit Antibodies for Treatment of Angiogenesis, Atherosclerosis, and Inflammation

Description of Technology: CD97 is a T-cell glycoprotein that is upregulated in activated T-cells and is involved in the onset and maintenance of inflammation and angiogenesis. It is a seven-span transmembrane heterodimer consisting of one variant alpha subunit, which is soluble, and one invariant beta subunit, which is membrane-bound. Upon activation of T-cells, expression of the alpha subunit is dramatically upregulated and it is shed into the extracellular medium. The inventors have demonstrated in *in vitro* and *in vivo* studies that CD97 plays an important role in angiogenesis, inflammation, and atherosclerosis.

This technology describes isolated soluble CD97 alpha subunit proteins, selected from three alternatively spliced isoforms, as well as antibodies that bind to these subunits. The technology also describes methods of inhibiting angiogenesis, CD97-associated chronic inflammation, and atherosclerosis in mammals.

Potential Commercial Applications: This technology may be useful for the treatment of angiogenesis-related diseases, as well as inflammation and atherosclerosis. It can also be utilized in studies of inflammation and angiogenesis.

Competitive Advantages: CD97 represents a novel target for treatment of angiogenesis- and inflammation-mediated diseases.

Development Stage:

• Early-stage
• In vitro data available
• In vivo data available (animal)

Inventor: Kathleen Kelly (NCI)

Publication: Gray J, *et al.* CD97 is a processed, seven-transmembrane, heterodimeric receptor associated with inflammation. J Immunol.1996 Dec 15;157(12):5438–47. [PMID 8955192]

Intellectual Property: HHS Reference No. E–009–1996/0—

• US Patent No. 6,365,712 issued 02 Apr 2002
• US Patent No. 6,846,911 issued 25 Jan 2005

Licensing Contact: Tara L. Kirby, Ph.D.; 301–435–4426; *tarak@mail.nih.gov.*

Dated: June 12, 2012.

Richard U. Rodriguez,

Director, Division of Technology Development and Transfer, Office of Technology Transfer, National Institutes of Health.

[FR Doc. 2012–14703 Filed 6–15–12; 8:45 am]

BILLING CODE 4140–01–P

DEPARTMENT OF HOMELAND SECURITY

U.S. Citizenship and Immigration Services

Agency Information Collection Activities: Form I–693, Revision of a Currently Approved Information Collection; Comment Request

ACTION: 60-Day Notice of Information Collection Under Review: Form I–693, Report of Medical Examination and Vaccination Record, OMB Control No. 1615–0033.

The Department of Homeland Security (DHS), U.S. Citizenship and Immigration Services (USCIS) will be submitting the following information collection request for review and clearance in accordance with the Paperwork Reduction Act (PRA) of 1995. The information collection notice is published to obtain comments from the public and affected agencies. Comments are encouraged and will be accepted for 60 days until August 17, 2012.

Written comments and suggestions regarding items contained in this notice, and especially with regard to the estimated public burden and associated response time should be directed to DHS, USCIS, Chief, Regulatory Coordination Division, Office of Policy and Strategy, 20 Massachusetts Avenue NW., Washington, DC 20529–2020. Comments may also be submitted to DHS via email at *USCISFRComment@dhs.gov* or via the Federal eRulemaking Portal at *http://www.Regulations.gov* under e-Docket ID number USCIS–2006–0074. When submitting comments by email please add the OMB Control Number 1615–0033 in the subject box. All submissions received must include the agency name and e-Docket ID.

Regardless of the method used for submitting comments or material, all submissions will be posted, without change, to the Federal eRulemaking Portal at *http://www.Regulations.gov,* and will include any personal information you provide. Therefore, submitting this information makes it public. You may wish to consider limiting the amount of personal information that you provide in any voluntary submission you make to DHS. DHS may withhold information provided in comments for public viewing that it determines may impact the privacy of an individual or is offensive. For additional information please read the Privacy Act notice that is available via the link in the footer of *http://www.Regulations.gov*.

Note: The address listed in this notice should only be used to submit comments concerning this information collection. Please do not submit requests for individual case status inquiries to this address. If you are seeking information about the status of your individual case, please check ''My Case Status'' online at *https://egov.uscis.gov/cris/Dashboard.do,* or call the USCIS National Customer Service Center at 1–800–375–5283.

Written comments and suggestions from the public and affected agencies concerning the proposed collection of information should address one or more of the following four points:

(1) Evaluate whether the proposed collection of information is necessary for the proper performance of the functions of the agency, including whether the information will have practical utility;

(2) Evaluate the accuracy of the agencies estimate of the burden of the proposed collection of information, including the validity of the methodology and assumptions used;

(3) Enhance the quality, utility, and clarity of the information to be collected; and

(4) Minimize the burden of the collection of information on those who are to respond, including through the use of appropriate automated, electronic, mechanical, or other technological collection techniques or other forms of information technology, e.g., permitting electronic submission of responses.

Overview of this information collection:

(1) *Type of Information Collection:* Revision of a currently approved information collection.

(2) *Title of the Form/Collection:* Report of Medical Examination and Vaccination Record.

(3) *Agency form number, if any, and the applicable component of the Department of Homeland Security sponsoring the collection:* Form I–693. U.S. Citizenship and Immigration Services.

(4) *Affected public who will be asked or required to respond, as well as brief abstract:* Primary: *Individuals or households.* The information on the application will be used by USCIS in considering the eligibility for adjustment of status under 8 CFR part 209 and 8 CFR 210.5, 245.1, and 245a.3.

(5) *An estimate of the total annual number of respondents and the amount of time estimated for an average respondent to respond:* 565,180 responses at 2.5 hours per response.

(6) *An estimate of the total annual public burden (in hours) associated with the collection:* 1,412,950 annual burden hours.

If you need a copy of the information collection instrument, please visit the Federal eRulemaking Portal at *http://www.Regulations.gov.* We may also be contacted at USCIS, Regulatory Coordination Division, Office of Policy and Strategy, 20 Massachusetts Avenue NW., Washington, DC 20529–2020, Telephone number 202–272–8377.

Dated: June 13, 2012.

Laura Dawkins,

Chief, Regulatory Coordination Division, Office of Policy and Strategy, U.S. Citizenship and Immigration Services, Department of Homeland Security.

[FR Doc. 2012–14763 Filed 6–15–12; 8:45 am]

BILLING CODE 9111–97–P

DEPARTMENT OF HOUSING AND URBAN DEVELOPMENT

[Docket No. FR–5607–N–20]

Notice of Proposed Information Collection: Comment Request; Application for Fee or Roster Personnel (Appraisers and Inspectors) Designation and Appraisal Report Forms

AGENCY: Office of the Assistant Secretary for Housing, HUD.

ACTION: Notice.

SUMMARY: The proposed information collection requirement described below will be submitted to the Office of Management and Budget (OMB) for review, as required by the Paperwork Reduction Act. The Department is soliciting public comments on the subject proposal.

DATES: *Comments Due Date: August 17, 2012.*

ADDRESSES: Interested persons are invited to submit comments regarding this proposal. Comments should refer to the proposal by name and/or OMB Control Number and should be sent to: Reports Liaison Officer, Department of Housing and Urban Development, 451 7th Street SW., Washington, DC 20410, Room 9120 or the number for the Federal Information Relay Service (1–800–877–8339).

FOR FURTHER INFORMATION CONTACT: Karin Hill, Director, Office of Single Family Program Development, Department of Housing and Urban Development, 451 7th Street SW., Washington, DC 20410, telephone (202) 708–2121 (this is not a toll free number) for copies of the proposed forms and other available information.

SUPPLEMENTARY INFORMATION: The Department is submitting the proposed

information collection to OMB for review, as required by the Paperwork Reduction Act of 1995 (44 U.S.C. Chapter 35, as amended).

This Notice is soliciting comments from members of the public and affected agencies concerning the proposed collection of information to: (1) Evaluate whether the proposed collection is necessary for the proper performance of the functions of the agency, including whether the information will have practical utility; (2) Evaluate the accuracy of the agency's estimate of the burden of the proposed collection of information; (3) Enhance the quality, utility, and clarity of the information to be collected; and (4) Minimize the burden of the collection of information on those who are to respond; including the use of appropriate automated collection techniques or other forms of information technology, e.g., permitting electronic submission of responses.

This Notice also lists the following information:

Title of Proposal: Appraisal Industry Forms.

OMB Control Number, if applicable: 2502–0538.

Description of the need for the information and proposed use: HUD requires that appraisals and inspections be performed on certain FHA insured properties and the FHA Appraiser and Inspector rosters assure that HUD has the ability to track the performance of appraisers and inspectors and sanction those who are not performing adequately, this is necessary to protect the FHA insurance fund.

Agency form numbers, if applicable: HUD–92563I, HUD 92563A, HUD 92564–CN, Fannie Mae Forms: 1004, 1004c, 1004mc, 1025, 1073, 1075, 2055, 2090.

Estimation of the total numbers of hours needed to prepare the information collection including number of respondents, frequency of response, and hours of response: The number of burden hours is 25,184. The number of respondents is 17,650, the number of responses is 468,150, the frequency of response is on occasion, and the burden hour per response is less than 15 minutes.

Status of the proposed information collection: This is an extension of a currently approved collection.

Authority: The Paperwork Reduction Act of 1995, 44 U.S.C., Chapter 35, as amended.

Dated: *June 13, 2012.*

Laura M. Marin,

Acting General Deputy Assistant Secretary for Housing—Acting General Deputy Federal Housing Commissioner.

[FR Doc. 2012–14782 Filed 6–15–12; 8:45 am]

BILLING CODE 4210–67–P

DEPARTMENT OF HOUSING AND URBAN DEVELOPMENT

[Docket No. FR–5607–N–21]

Notice of Proposed Information Collection: Comment Request; Previous Participation Certification

AGENCY: Office of the Assistant Secretary for Housing-Federal Housing Commissioner, HUD.

ACTION: Notice.

SUMMARY: The proposed information collection requirement described below will be submitted to the Office of Management and Budget (OMB) for review, as required by the Paperwork Reduction Act. The Department is soliciting public comments on the subject proposal.

DATES: *Comments Due Date: August 17, 2012.*

ADDRESSES: Interested persons are invited to submit comments regarding this proposal. Comments should refer to the proposal by name and/or OMB Control Number and should be sent to: Reports Liaison Officer, Department of Housing and Urban Development, 451 7th Street SW., Washington, DC 20410, Room 9120 or the number for the Federal Information Relay Service (1–800–877–8339).

FOR FURTHER INFORMATION CONTACT: Devasia Karimpanal, Office of Multifamily Asset Management, Department of Housing and Urban Development, 451 7th Street SW., Washington, DC 20410, telephone number (202) 402–7682 (this is not a toll-free number) for copies of the proposed forms and other available information.

SUPPLEMENTARY INFORMATION: The Department is submitting the proposed information collection to OMB for review, as required by the Paperwork Reduction Act of 1995 (44 U.S.C. Chapter 35, as amended).

This Notice is soliciting comments from members of the public and affected agencies concerning the proposed collection of information to: (1) Evaluate whether the proposed collection is necessary for the proper performance of the functions of the agency, including whether the information will have practical utility; (2) Evaluate the accuracy of the agency's estimate of the burden of the proposed collection of information; (3) Enhance the quality, utility, and clarity of the information to be collected; and (4) Minimize the burden of the collection of information on those who are to respond; including the use of appropriate automated collection techniques or other forms of information technology, e.g., permitting electronic submission of responses.

This Notice also lists the following information:

Title of Proposal: Previous Participation Certification.

OMB Control Number, if applicable: 2502–0118.

Description of the need for the information and proposed use: This information is necessary to ensure that responsible individuals and organizations participate in HUD's multifamily housing programs. The information will be used to evaluate participants' previous participation in government programs and ensure that the past record is acceptable prior to granting approval to participate in HUD's multifamily housing programs. The collection of this information is designed to be 100 percent automated and digital submission of all data and certifications is available via HUD's secure Internet systems. However HUD will provide for both electronic and paper submissions until it publishes revised regulations.

Agency form numbers, if applicable: HUD–2530.

Estimation of the total numbers of hours needed to prepare the information collection including number of respondents, frequency of response, and hours of response: The estimated number of respondents is 10,000; the frequency of responses is 1 unless additional actions require additional submissions; estimated time to gather and enter the information into the automated system is estimated to be 30 minutes per electronic submission, one hour for paper submission and the estimated total annual burden hours are 7,500.

Status of the proposed information collection: This is an extension of a currently approved collection.

Authority: The Paperwork Reduction Act of 1995, 44 U.S.C., Chapter 35, as amended.

Dated: June 11, 2012.

Laura M. Marin,

Acting General Deputy Assistant Secretary for Housing—Acting General Deputy Federal Housing Commissioner.

[FR Doc. 2012–14710 Filed 6–15–12; 8:45 am]

BILLING CODE 4210–27–P

DEPARTMENT OF THE INTERIOR

Fish and Wildlife Service

[FWS–R8–ES–2012–N112: FXES11120800000F2–123–FF08ECAR00]

Receipt of Application for the Amendment of the Incidental Take Permit for the Multiple Species Conservation Program County of San Diego Subarea Plan, County of San Diego, California

AGENCY: Fish and Wildlife Service, Interior.

ACTION: Notice of receipt of permit amendment application; request for comments.

SUMMARY: We, the U.S. Fish and Wildlife Service (Service) intend to amend the incidental take permit (PRT–840414) issued for the Multiple Species Conservation Program County of San Diego Subarea Plan (MSCP Subarea Plan). The County of San Diego (Applicant) has requested an amendment to the incidental take permit. The amendment would modify the MSCP Subarea Plan boundary to add approximately 210 acres of land solely for conservation purposes. If amended, no additional incidental take will be authorized. The Applicant will follow all other existing habitat conservation plan conditions. We also announce a public comment period.

DATES: To ensure consideration, please send your written comments by July 18, 2012.

ADDRESSES: To request further information or submit written comments, please use one of the following methods and note that your information request or comment is in reference to the MSCP Subarea Plan:

- *Email: Karen_Goebel@fws.gov.* Include ''MSCP Subarea Plan'' in the subject line of the message.
- *U.S. Mail:* Field Supervisor, Fish and Wildlife Service, Carlsbad Fish and Wildlife Office, 6010 Hidden Valley Road, Suite 101, Carlsbad, California 92011.
- *In-Person Drop-off, Viewing, or Pickup:* Call 760–431–9440 to make an appointment during regular business hours to drop off comments or view received comments at this location:
- *Fax:* Field Supervisor, 760–918–0638, Attn. MSCP Subarea Plan.

FOR FURTHER INFORMATION CONTACT: Ms. Karen Goebel, Assistant Field Supervisor, Carlsbad Fish and Wildlife Office (see **ADDRESSES**); telephone: 760–431–9440. If you use a telecommunications device for the deaf, please call the Federal Information Relay Service at 800–877–8339.

SUPPLEMENTARY INFORMATION: We, the Service, have made a preliminary determination that amendment of the permit is neither a major Federal action that will significantly affect the quality of the human environment within the meaning of section 102(2)(C) of the National Environmental Policy Act (NEPA), nor will it individually or cumulatively have more than a negligible effect on the species covered in the MSCP Subarea Plan. Therefore, the permit amendment qualifies as a categorical exclusion under NEPA as provided by the Department of Interior Manual (516 DM 2, Appendix 1 and 516 DM 6, Appendix 1).

Background

On March 17, 1998, the Service issued an incidental take permit (PRT–840414), pursuant to section 10(a)(1)(B) of the Endangered Species Act (16 U.S.C. 1531 *et seq.*) for 85 species covered by the MSCP Subarea Plan. The MSCP Subarea Plan boundary encompasses 252,132 acres of unincorporated land in south San Diego County, California. Opportunity for public review of the original permit application and the habitat conservation plan was provided in the **Federal Register** on March 28, 1997 (62 FR 14938) and November 14, 1997 (62 FR 61140).

The Applicant is seeking an amendment to their incidental take permit, consistent with section 1.14.2 of the MSCP Subarea Plan Implementing Agreement, to modify the MSCP Subarea Plan boundary to add 210.6 acres of land for conservation purposes (*i.e.,* a ''hardline preserve'') in contemplation of establishing a privately-owned mitigation bank. Establishment of the bank would be a future action that would require a formalized conservation banking agreement consistent with section 9.13 of the MSCP Subarea Plan Implementing Agreement.

The conservation lands are located in an unincorporated portion of northern San Diego County in the community of Ramona, approximately 1 mile north of the existing MSCP Subarea Plan boundary. The conservation land consists of 4 parcels; a single 63-acre parcel (Assessor's Parcel Number [APN] 277–050–32), and 3 parcels totaling 147.6 acres (APN 277–121–05, 277–111–09, and 277–121–08) (*i.e.,* unsectioned lands within Township 13 South, Range 1 West of the U.S. Geological Survey 7.5-minute San Pasqual quadrangle). The parcels are contiguous with other conserved lands and support vernal pool, riparian, and nonnative grassland habitats. Sensitive species documented on the parcels include the federally listed endangered San Diego fairy shrimp (*Branchinecta sandiegonensis*) and the burrowing owl (*Athene cunicularia*), an MSCP Subarea Plan covered species. More details on the specific parcels and their locations are available in the permit amendment application (see **ADDRESSES**).

Public Availability of Comments

Written comments we receive become part of the public record associated with this action. Before including your address, phone number, email address, or other personal identifying information in your comments, you should be aware that your entire comment—including your personal identifying information—may be made publicly available at any time. While you can ask us in your comment to withhold your personal identifying information from public review, we cannot guarantee that we will be able to do so.

Authority

We provide this notice under section 10(c) the Act (16 U.S.C. 1531 *et seq.*) and by NEPA regulations (40 CFR 1506.6).

Jim A. Bartel,

Field Supervisor, Carlsbad Fish and Wildlife Office.

[FR Doc. 2012–14744 Filed 6–15–12; 8:45 am]

BILLING CODE 4310–55–P

DEPARTMENT OF THE INTERIOR

Fish and Wildlife Service

[FWS–R8–ES–2012–N139: FF08ESMF00–FXES11120800000F2–123–F2]

Proposed Low-Effect Habitat Conservation Plan for the California Tiger Salamander, Calaveras County, CA

AGENCY: Fish and Wildlife Service, Interior.

ACTION: Notice of availability; request for comment.

SUMMARY: We, the U.S. Fish and Wildlife Service, have received an application from Juan San Bartolome (applicant) for a 10-year incidental take permit for one species under the Endangered Species Act of 1973, as amended (Act). The application addresses the potential for ''take'' of one listed animal, the threatened Central California Distinct Population Segment of the California tiger salamander (tiger salamander). The applicant would implement a conservation program to minimize and mitigate the project activities, as described in the applicant's

low-effect habitat conservation plan (Plan). We request comments on the applicant's application and Plan, and the preliminary determination that the Plan qualifies as a ''low-effect'' habitat conservation plan, eligible for a categorical exclusion under the National Environmental Policy Act of 1969, as amended (NEPA). We discuss our basis for this determination in our environmental action statement (EAS), also available for public review.

DATES: We must receive written comments on or before July 18, 2012.

ADDRESSES: To request further information or submit written comments, please use one of the following methods, and note that your information request or comment is in reference to the Low-Effect Habitat Conservation Plan for the California Tiger Salamander, Calaveras County, California.

- *U.S. Mail:* Mike Thomas, Conservation Planning Division, U.S. Fish and Wildlife Service, Sacramento Fish and Wildlife Office, 2800 Cottage Way, W–2605, Sacramento, CA 95825.
- *In-Person Drop-off, Viewing, or Pickup:* Call 916–414–6600 to make an appointment during regular business hours to drop off comments or view received comments at the above address.

FOR FURTHER INFORMATION CONTACT: Mike Thomas, Chief, Conservation Planning Division, or Eric Tattersall, Deputy Assistant Field Supervisor, at the address shown above or at 916–414–6600 (telephone). If you use a telecommunications device for the deaf, please call the Federal Information Relay Service at 800–877–8339.

SUPPLEMENTARY INFORMATION:

Availability of Documents

You may obtain copies of the permit application, plan, and EAS from the individuals in **FOR FURTHER INFORMATION CONTACT**. Copies of these documents are also available for public inspection, by appointment, during regular business hours, at the Sacramento Fish and Wildlife Office (see **ADDRESSES**).

Public Availability of Comments

Before including your address, phone number, or other personal identifying information in your comment, you should be aware that your entire comment—including your personal identifying information—may be made publicly available at any time. While you can ask us in your comment to withhold your personal identifying information from public review, we cannot guarantee that we will be able to do so.

Background Information

Section 9 of the Act prohibits taking of fish and wildlife species listed as endangered or threatened under section 4 of the Act. Under the Act, the term ''take'' means to harass, harm, pursue, hunt, shoot, wound, kill, trap, capture, or collect, or to attempt to engage in any such conduct. The term ''harm'' is defined in the regulations as significant habitat modification or degradation that results in death or injury of listed species by significantly impairing essential behavioral patterns, including breeding, feeding, or sheltering (50 CFR 17.3). The term ''harass'' is defined in the regulations as to carry out actions that create the likelihood of injury to listed species to such an extent as to significantly disrupt normal behavioral patterns, which include, but are not limited to, breeding, feeding, or sheltering (50 CFR 17.3).

However, under specified circumstances, the Service may issue permits that allow the take of federally listed species, provided that the take that occurs is incidental to, but not the purpose of, an otherwise lawful activity. Regulations governing permits for endangered and threatened species are at 50 CFR 17.22 and 17.32, respectively.

Section 10(a)(1)(B) of the Act contains provisions for issuing such incidental take permits to non-Federal entities for the take of endangered and threatened species, provided the following criteria are met:

1. The taking will be incidental;
2. The applicants will, to the maximum extent practicable, minimize and mitigate the impact of such taking;
3. The applicants will develop a proposed HCP and ensure that adequate funding for the plan will be provided;
4. The taking will not appreciably reduce the likelihood of the survival and recovery of the species in the wild; and
5. The applicants will carry out any other measures that the Service may require as being necessary or appropriate for the purposes of the HCP.

The applicant seeks an incident take permit for covered activities within 109 acres of grassland associated with the construction of 15-lot subdivision, with a minimum 5-acre parcel size, on the north side of Highway 12, in northwest Calaveras County, just west of Burson, California. The following federally listed species will be included as a covered species (covered species) in the applicants' proposed Plan:

- Central California Distinct Population Segment of the California tiger salamander (*Ambystoma californiense*) (threatened)

The applicant would receive assurances under our ''No Surprises'' regulations (50 CFR 17.22(b)(5) and 17.32(b)(5)) for take of tiger salamanders.

Covered activities include the following:

- Grading and ground leveling associated with construction of 15 residential homes,
- Vegetation removal and planting,
- Use of heavy equipment (not limited to bulldozers and backhoes),
- Erosion control structures (such as silt fencing and barriers),
- Dust control (such as watering surface soils),
- Construction of driveways and roadways,
- Trenching and installation of utilities and irrigation systems, and
- Landscaping associated with all of the above activities and structures.

The applicant proposes to avoid, minimize, and mitigate the effects to the covered species associated with the covered activities by fully implementing the Plan. Minimization measures will include, but are not limited to:

- An employee education program,
- Temporary construction fencing,
- A 15-mile per hour speed limit,
- Construction work time windows (i.e., to avoid the rainy season and nighttime work), and
- A deed restriction or conservation easement on 54 acres of the site for protection of tiger salamander upland habitat.

The applicant proposes to build a 15-lot subdivision, with a minimum 5-acre parcel size. Thirteen of the lots would be between 5.0 and 5.5 acres, one lot would be 9.0 acres, and the largest and most northerly lot would encompass 26.57 acres, including an existing pond that would be left undisturbed. The subdivision includes 15 single-family residences with associated landscaping, utilities, and roadways.

Alternatives

Our proposed action is approving the applicant's Plan and issuance of an incidental take permit for the applicant's covered activities. As required by the Act, the applicant's Plan considers alternatives to the take under the proposed action. The Plan considers the environmental consequences of two alternatives to the proposed action, the No Action Alternative and a Reduced Take Alternative. Under the No Action Alternative, we would not issue a permit; the applicant would not build the proposed subdivision, the on-site upland grassland habitat would not receive protection, and no take would occur for the construction of the

residence and its associated structures. For these reasons, the No-Action Alternative has been rejected.

Under the Reduced Take Alternative, we would issue an incidental take permit for the development of 10 residential units instead of the proposed 15. However, due to the relatively small project site dimensions, the County's zoning ordinance of a minimum 5-acre parcels, and infrastructure that would still be required by the landowner (*e.g.,* roads, utilities, *etc.*) any further reduction in the number of lots would make the project economically unviable. In addition, even though this alternative would result in larger lot size and slightly less vehicular traffic due to the reduced number of homeowners, the impacts to the covered species relative to the increase in preserved upland habitat would be small. For these reasons, the Reduced Take Alternative was rejected.

Under the Proposed Action Alternative, we would issue an incidental take permit for the applicant's proposed project, which includes the activities described above. The Proposed Action Alternative would result in permanent loss of 55 acres of upland grassland habitat for the California tiger salamander. To mitigate for these effects, the applicant proposes to protect, enhance, and manage in perpetuity 54 acres of on-site grassland habitat.

National Environmental Policy Act

As described in our EAS, we have made the preliminary determination that approval of the proposed Plan and issuance of the permit would qualify as a categorical exclusion under NEPA (42 U.S.C. 4321 *et seq.*), as provided by Federal regulations (40 CFR 1500, 5(k), 1507.3(b)(2), 1508.4) and the Department of the Interior Manual (516 DM 2 and 516 DM 8). Our EAS found that the proposed plan qualifies as a ''low-effect'' habitat conservation plan, as defined by our Habitat Conservation Planning Handbook (November 1996). Determination of low-effect habitat conservation plans is based on the following three criteria: (1) Implementation of the proposed plan would result in minor or negligible effects on federally-listed, proposed, and candidate species and their habitats; (2) implementation of the proposed plan would result in minor or negligible effects on other environmental values or resources; and (3) impacts of the plan, considered together with the impacts of other past, present, and reasonably foreseeable similarly situated projects, would not result, over time, in cumulative effects to environmental values or resources that would be considered significant. Based upon the preliminary determinations in the EAS, we do not intend to prepare further NEPA documentation. We will consider public comments when making the final determination on whether to prepare an additional NEPA document on the proposed action.

Public Comments

We request data, comments, new information, or suggestions from the public, other concerned governmental agencies, the scientific community, Tribes, industry, or any other interested party on this notice. We particularly seek comments on the following:

1. Biological information concerning the species;
2. Relevant data concerning the species;
3. Additional information concerning the range, distribution, population size, and population trends of the species;
4. Current or planned activities in the subject area and their possible impacts on the species;
5. The presence of archeological sites, buildings and structures, historic events, sacred and traditional areas, and other historic preservation concerns, which are required to be considered in project planning by the National Historic Preservation Act; and
6. Identification of any other environmental issues that should be considered with regard to the proposed development and permit action.

Authority

We provide this notice pursuant to section 10(c) of the Act and the NEPA public-involvement regulations (40 CFR 1500.1(b), 1500.2(d), and 1506.6). We will evaluate the permit application, including the Plan, and comments we receive to determine whether the application meets the requirements of section 10(a) of the Act. If the requirements are met, we will issue a permit to the applicant for the incidental take of the Central California Distinct Population Segment of the California tiger salamander from the implementation of the covered activities described in the Low-Effect Habitat Conservation Plan for the California Tiger Salamander, Calaveras County, California. We will make the final permit decision no sooner than 30 days after the date of this notice.

Dated: June 11, 2012.

Susan K. Moore,

Field Supervisor, Sacramento Fish and Wildlife Office, Sacramento, California.

[FR Doc. 2012–14649 Filed 6–15–12; 8:45 am]

BILLING CODE 4310–55–P

DEPARTMENT OF THE INTERIOR

Bureau of Indian Affairs

Implementation of Indian Reservation Roads Program and Streamlining the Federal Delivery of Tribal Transportation Services

AGENCY: Bureau of Indian Affairs, Interior.

ACTION: Notice of Tribal Consultations and Informational Meetings; Correction.

SUMMARY: The Bureau of Indian Affairs (BIA) published a document in the **Federal Register** of May 7, 2012, announcing tribal consultations to discuss the following topics: (1) Changes in how Proposed Roads and Access Roads are considered in the calculation of the Relative Needs Distribution Formula (RNDF) used for the allocation of Indian Reservation Roads (IRR) funding among tribes; (2) streamlining BIA delivery of transportation program services to tribal governments; and (3) update on implementation of ''Question 10.'' BIA and the Federal Highway Administration (FHWA) will also present an update on potential congressional reauthorization of the current transportation legislation involving the Indian Reservation Roads program or, if new transportation legislation is enacted prior to the meetings, BIA and FHWA will discuss its anticipated impacts on the IRR program. This notice corrects the meeting dates, locations, and agenda.

DATES: See the **SUPPLEMENTARY INFORMATION** section of this notice for consultation dates.

ADDRESSES: See the **SUPPLEMENTARY INFORMATION** section of this notice for locations where the consultations will be held.

FOR FURTHER INFORMATION CONTACT: LeRoy M. Gishi, Chief, Division of Transportation, Bureau of Indian Affairs, 1849 C Street NW., MS–4513, Washington, DC 20240, telephone (202) 513–7711; or Robert W. Sparrow, Jr., IRR Program Manager, Federal Highway Administration, 1200 New Jersey Ave. SE., Room E61–311, Washington, DC 20159, telephone (202) 366–9483.

SUPPLEMENTARY INFORMATION:

Corrections

In the **Federal Register** of May 7, 2012, on page 26786, the meeting date of June 21, 2012 in Lincoln, NE has been removed. In the same section, the Meeting Agenda has been modified by switching time slots for Question 10 Update section with the Reauthorization Update section. In addition, three new

meetings were added. Correct the meeting dates, locations, and agenda listed in the **SUPPLEMENTARY INFORMATION** section with the following:

Meeting Dates and Locations

The consultation sessions will be held on the following dates, at the following locations:

Meeting date	Location	Time
June 5, 2012	Anchorage, AK	9 a.m.–4:30 p.m.
June 7, 2012	Spokane, WA	9 a.m.–4:30 p.m.
June 12, 2012	Albuquerque, NM	9 a.m.–4:30 p.m.
June 13, 2012	Phoenix, AZ	9 a.m.–4:30 p.m.
June 14, 2012	Sacramento, CA	9 a.m.–4:30 p.m.
June 19, 2012	Nashville, TN	9 a.m.–4:30 p.m.
June 20, 2012	Oklahoma City, OK	9 a.m.–4:30 p.m.
June 26, 2012	Billings, MT	9 a.m.–4:30 p.m.
June 27, 2012	Rapid City, SD	9 a.m.–4:30 p.m.
June 28, 2012	Mount Pleasant, MI	9 a.m.–4:30 p.m.
July 17, 2012	Fairbanks, AK	9 a.m.–4:30 p.m.
July 18, 2012	Nome, AK*	10 a.m.–5:30 p.m.
July 19, 2012	Bethel, AK	9 a.m.–4:30 p.m.

*Meeting start time will be 1 hour later.

Meeting Agenda (All Times Local)

9 a.m.–9:15 a.m.	Welcome and Introductions.
9:15 a.m.–10:45 a.m.	Proposed/Access Roads (Recommendation, Expectations, Implementation).
10:45 a.m.–11 a.m.	Break.
11 a.m.–11:45 a.m.	Question 10 Update.
11:45 a.m.–1 p.m.	Lunch.
1 p.m.–3 p.m.	Tribal Transportation Program Streamlining.
3 p.m.–3:15 p.m.	Break.
3:15 p.m.–4:00 p.m.	Reauthorization Update.
4:00 p.m.–4:30 p.m.	Closing Comments.
4:30 p.m.	Adjourn.

Dated: June 7, 2012.

Donald E. Laverdure,

Acting Assistant Secretary—Indian Affairs.

[FR Doc. 2012–14707 Filed 6–15–12; 8:45 am]

BILLING CODE 4310–LY–P

DEPARTMENT OF THE INTERIOR

Bureau of Land Management

[LNM9300000 L12200000 XX0000]

Renewal of Approved Information Collection

AGENCY: Bureau of Land Management, Interior.

ACTION: 60-Day Notice and Request for Comments.

SUMMARY: In compliance with the Paperwork Reduction Act, the Bureau of Land Management (BLM) invites public comments on, and plans to request approval to continue, the collection of information that is necessary to implement two provisions of the Federal Cave Resources Protection Act—one which requires Federal agencies to consult with interested parties to develop a listing of significant caves, and another under which Federal and State governmental agencies and bona fide educational and research institutions may request confidential information regarding significant caves. The Office of Management and Budget (OMB) has assigned control number 1004–0165 to this information collection.

DATES: Submit comments on the proposed information collection by August 17, 2012.

ADDRESSES: Comments may be submitted by mail, fax, or electronic mail. Mail: U.S. Department of the Interior, Bureau of Land Management, 1849 C Street NW., Room 2134LM, Attention: Jean Sonneman, Washington, DC 20240. Fax: to Jean Sonneman at 202–245–0050.

Electronic mail: *Jean_Sonneman@blm.gov.*

Please indicate ''Attn: 1004–0165'' regardless of the form of your comments.

FOR FURTHER INFORMATION CONTACT: James Goodbar, at 575–234–5929. Persons who use a telecommunication device for the deaf (TDD) may call the Federal Information Relay Service (FIRS) at 1–800–877–8339, to leave a message for Mr. Goodbar.

SUPPLEMENTARY INFORMATION: OMB regulations at 5 CFR 1320, which implement provisions of the Paperwork Reduction Act, 44 U.S.C. 3501–3521, require that interested members of the public and affected agencies be given an opportunity to comment on information collection and recordkeeping activities (see 5 CFR 1320.8(d) and 1320.12(a)). This notice identifies an information collection that the BLM plans to submit to OMB for approval. The Paperwork Reduction Act provides that an agency may not conduct or sponsor a collection of information unless it displays a currently valid OMB control number. Until OMB approves a collection of information, you are not obligated to respond.

The BLM will request a 3-year term of approval for this information collection activity. Comments are invited on: (1) The need for the collection of information for the performance of the functions of the agency; (2) the accuracy of the agency's burden estimates; (3) ways to enhance the quality, utility and clarity of the information collection; and (4) ways to minimize the information collection burden on respondents, such as use of automated means of collection of the information. A summary of the public comments will accompany our submission of the information collection requests to OMB.

The following information is provided for the information collection:

Title: Cave Management: Cave Nominations and Confidential Information (43 CFR Part 37).

Forms: None.

OMB Control Number: 1004–0165.

Abstract: The information covered in this Information Collection Request applies to caves on Federal lands administered by the Bureau of Land Management (BLM), National Park Service, U.S. Fish and Wildlife Service, and Bureau of Reclamation. The BLM collects information from appropriate private sector interests, including ''cavers,'' in order to update a list of significant caves that are under the jurisdiction of the agencies listed above. The BLM also processes requests for

confidential information regarding significant caves. The information collected enables the BLM to comply with the Federal Cave Resources Protection Act (16 U.S.C. 4301–4310).

Frequency of Collection: On occasion.

Estimated Number and Description of Respondents: 100 individuals and households.

Estimated Reporting and Recordkeeping ''Hour'' Burden: 1090 hours.

Estimated Reporting and Recordkeeping ''Non-Hour Cost'' Burden: None.

The following table details the individual components and respective hour burdens of this information collection request:

A. Type of response	B. Number of responses	C. Time per response	D. Total hours (B × C)
Cave Nomination	90	12	1,080
Request for Confidential Cave Information	10	1	10
Totals	100		1,090

Before including your address, phone number, email address, or other person identifying information in your comment, you should be aware that your entire comment—including your person identifying information—may be made publicly available at any time. While you can ask us in your comment to withhold your personal identifying information from public review, we cannot guarantee that we will be able to do so.

Jean Sonneman,

Bureau of Land Management, Information Collection Clearance Officer.

[FR Doc. 2012–14675 Filed 6–15–12; 8:45 am]

BILLING CODE 4310–84–P

DEPARTMENT OF INTERIOR

Bureau of Land Management

[LLCO956000 L14200000.BJ0000]

Notice of Filing of Plats

AGENCY: Bureau of Land Management, Interior.

ACTION: Notice of Filing of Plats; Colorado.

SUMMARY: The Bureau of Land Management (BLM) Colorado State Office is publishing this notice to inform the public of the filing of the land survey plats listed below.

DATES: The plats described in this notice were filed on May 25, 2012.

ADDRESSES: BLM Colorado State Office, Cadastral Survey, 2850 Youngfield Street, Lakewood, Colorado 80215–7093.

FOR FURTHER INFORMATION CONTACT: Randy Bloom, Chief Cadastral Surveyor for Colorado, (303) 239–3856.

SUPPLEMENTARY INFORMATION: The plat, in 3 sheets, and field notes of the dependent survey and resurvey in Fractional Township 10 South, Range 103 West, Sixth Principal Meridian, Colorado, were accepted and filed on May 25, 2012.

Randy Bloom,

Chief Cadastral Surveyor for Colorado.

[FR Doc. 2012–14792 Filed 6–15–12; 8:45 am]

BILLING CODE 4310–JB–P

INTERNATIONAL TRADE COMMISSION

[Investigation No. 337–TA–817]

Certain Communication Equipment, Components Thereof, and Products Containing the Same, Including Power Over Ethernet Telephones, Switches, Wireless Access Points, Routers and Other Devices Used in LANS, and Cameras; Determination Not To Review an Initial Determination Granting Complainant's Motion To Amend the Complaint and Notice of Investigation

AGENCY: U.S. International Trade Commission.

ACTION: Notice.

SUMMARY: Notice is hereby given that the U.S. International Trade Commission has determined not to review the presiding administrative law judge's (''ALJ'') initial determination (''ID'') (Order No. 10) granting the Complainant's motion to amend the complaint and the Notice of Investigation.

FOR FURTHER INFORMATION CONTACT: Amanda S. Pitcher, Esq., Office of the General Counsel, U.S. International Trade Commission, 500 E Street SW., Washington, DC 20436, telephone (202) 205–2737. Copies of non-confidential documents filed in connection with this investigation are or will be available for inspection during official business hours (8:45 a.m. to 5:15 p.m.) in the Office of the Secretary, U.S. International Trade Commission, 500 E Street SW., Washington, DC 20436, telephone (202) 205–2000. General information concerning the Commission may also be obtained by accessing its Internet server at *http://www.usitc.gov.* The public record for this investigation may be viewed on the Commission's electronic docket (EDIS) at *http://edis.usitc.gov.* Hearing-impaired persons are advised that information on this matter can be obtained by contacting the Commission's TDD terminal on (202) 205–1810.

SUPPLEMENTARY INFORMATION: The Commission instituted this investigation on December 7, 2011, based on a complaint filed by ChriMar Systems, Inc. d/b/a DMS Technologies (''ChriMar'') of Farmington Hills, Michigan, alleging a violation of section 337 in the importation into the United States, the sale for importation, and the sale within the United States after importation of certain communication equipment, components thereof, and products containing the same, including power over ethernet telephones, switches, wireless access points, routers and other devices used in LANs, and cameras. 76 FR 76,436–37 (Dec. 7, 2011). The complaint alleges infringement of certain claims of U.S. Patent No. 7,457,250 (''the '250 patent''). The first amended complaint further alleges that an industry in the United States exists as required by subsection (a)(2) of section 337. The Notice of Investigation names a plurality of respondents.

On May 14, 2012, the ALJ issued an ID granting ChriMar's motion to amend the complaint and Notice of Investigation. Order No. 10 at 7. ChriMar sought to add additional facts to the complaint and to amend the Notice of Investigation to add the underlined portion of the following language: ''whether an industry in the United States exists *or is in the process of being established* as required by subsection(a)(2) of section 337.'' *Id.* at 1, 3, 7. The ALJ found that there is good

cause to amend the complaint and Notice of Investigation. *Id.* at 7. No petitions for review were filed. The Commission has determined not to review the ID.

The authority for the Commission's determination is contained in Section 337 of the Tariff Act of 1930, as amended (19 U.S.C. 1337), and in section 210.42(h) of the Commission's Rules of Practice and Procedure (19 CFR 210.42(h)).

By order of the Commission.

Issued: June 12, 2012.

Lisa R. Barton,

Acting Secretary to the Commission.

[FR Doc. 2012–14750 Filed 6–15–12; 8:45 am]

BILLING CODE 7020–02–P

DEPARTMENT OF JUSTICE

Antitrust Division

Notice Pursuant to the National Cooperative Research and Production Act of 1993—Cooperative Research Group on Particle Sensor Performance and Durability

Notice is hereby given that, on May 23, 2012, pursuant to Section 6(a) of the National Cooperative Research and Production Act of 1993, 15 U.S.C. 4301 *et seq.* (''the Act''), Southwest Research Institute—Cooperative Research Group on Particle Sensor Performance and Durability (''PSPD'') has filed written notifications simultaneously with the Attorney General and the Federal Trade Commission disclosing (1) the identities of the parties to the venture and (2) the nature and objectives of the venture. The notifications were filed for the purpose of invoking the Act's provisions limiting the recovery of antitrust plaintiffs to actual damages under specified circumstances.

Pursuant to Section 6(b) of the Act, the identities of the parties to the venture are: Caterpillar, Inc., Peoria, IL; Electricfil Automotive, Miribel Cedex, FRANCE; MTU Friedrichshafen GMBH, Friedrichshafen, GERMANY; Emisense Technologies, LLC, San Juan Capistrano, CA; NGK Spark Plug Co., Ltd., Nagoya, JAPAN; Isuzu Manufacturing Services of America, Inc., Plymouth, MI; and Navistar, Inc., Melrose Park, IL. The general area of PSPD's planned activity is to critically investigate the performance and durability of various particle sensor technologies on a diesel engine platform. State-of-the-art laboratory particle equipment will be employed for this investigation. PSPD will capitalize on its know-how and experience in this area to provide an impartial evaluation that all participants can benefit from. The program will run over a two-year period.

Patricia A. Brink,

Director of Civil Enforcement, Antitrust Division.

[FR Doc. 2012–14769 Filed 6–15–12; 8:45 am]

BILLING CODE 4410–11–P

DEPARTMENT OF JUSTICE

Antitrust Division

Notice Pursuant to the National Cooperative Research and Production Act of 1993—Border Security Technology Consortium

Notice is hereby given that, on May 30, 2012, pursuant to Section 6(a) of the National Cooperative Research and Production Act of 1993, 15 U.S.C. 4301 *et seq.* (''the Act''), Border Security Technology Consortium (''BSTC'') has filed written notifications simultaneously with the Attorney General and the Federal Trade Commission disclosing (1) the identities of the parties to the venture and (2) the nature and objectives of the venture. The notifications were filed for the purpose of invoking the Act's provisions limiting the recovery of antitrust plaintiffs to actual damages under specified circumstances.

Pursuant to Section 6(b) of the Act, the identities of the parties to the venture are: Old Dominion University, Norfolk, VA; DRS Tactical Systems, Inc., Melbourne, FL; Vista Research, Arlington, VA; Ball Aerospace & Technologies Corp., Boulder, CO; List Innovative Solutions, Inc., Herndon, VA; Arc Aspicio, Arlington, VA; University of Arizona, Tucson, AZ; Rapiscan Systems, Torrence, CA; and ICS Consulting, LLC, Arlington, VA. The general area of BSTC's planned activity is (i) to develop various border security-related monitoring, surveillance, communications, fencing and infrastructure, and other supporting technologies that advance the state-of-the-art; (ii) to improve U.S. industry, government and academia capabilities to sustain U.S. border protection in the research, development, engineering and production of border security-related systems; and (iii) to insert these technologies into legacy and development platforms as quickly and efficiently as possible.

Patricia A. Brink,

Director of Civil Enforcement, Antitrust Division.

[FR Doc. 2012–14766 Filed 6–15–12; 8:45 am]

BILLING CODE 4410–11–P

DEPARTMENT OF JUSTICE

Federal Bureau of Investigation

[OMB Number 1110–0021]

Proposed Collection, Comments Requested: FBI National Academy Level III Evaluation; FBI National Academy Post-Course Questionnaire for Graduates, FBI National Academy Post-Course Questionnaire for Supervisors of Graduates

ACTION: 60-Day notice of information collection under review.

The Department of Justice (DOJ), Federal Bureau of Investigation (FBI), Training Division's Office of Technology, Research, and Curriculum Development (OTRCD) will be submitting the following information collection request to the Office of Management and Budget (OMB) for review and approval in accordance with the Paperwork Reduction Act of 1995. The proposed information collection is published to obtain comments from the public and affected agencies. Comments are encouraged and will be accepted for 60 days until August 17, 2012. This process is conducted in accordance with 5 CFR 1320.10.

If you have comments (especially on the estimated public burden or associated response time), suggestions, or need a copy of the proposed information collection instrument with instructions or additional information, please contact *Laleatha B. Goode, Management and Program Analyst for the Evaluation Program, Federal Bureau of Investigation, Training Division, Curriculum Planning and Support Unit, FBI Academy, Quantico, Virginia 22135 or facsimile at (703) 632–3111.*

Written comments and suggestions from the public and affected agencies concerning the proposed collection of information are encouraged. Your comments should address one or more of the following three points:

(1) Evaluate whether the proposed collection of information is necessary for the proper performance of the functions of the agency/component, including whether the information will have practical utility;

(2) Evaluate the accuracy of the agency's/component's estimate of the burden of the proposed collection of the information, including the validity of the methodology and assumptions used;

(3) Enhance the quality, utility, and clarity of the information to be collected; and

(4) Minimize the burden of the collection of information on those who are to respond, including the use of

appropriate automated, electronic, mechanical, or other technological collection techniques or other forms of information technology, e.g., permitting electronic submission of responses.

Overview of This Information

1. *Type of Information Collection:* Approval of a reinstated collection.

2. *Title of the Forms:*

FBI National Academy Post-Course Questionnaire for Graduates.

FBI National Academy Post-Course Questionnaire for Supervisors of Graduates.

3. *Agency Form Number, if any, and the applicable component of the department sponsoring the collection:*

Form Number: 1110–0021.

Sponsor: Training Division of the Federal Bureau of Investigation (FBI), Department of Justice (DOJ).

4. *Affected Public who will be asked or required to respond, as well as a brief abstract:*

Primary: FBI National Academy graduates and their identified supervisors that represents state and local police and sheriffs' departments, military police organizations, and federal law enforcement agencies from the United States and over 150 foreign nations.

Brief Abstract: This collection is requested by FBI National Academy. These surveys have been developed that will measure the effectiveness of services that the FBI National Academy provides and will utilize the graduates and their supervisors' comments to improve upon the current process.

5. *An estimate of the total number of respondents and the amount of time estimated for an average respondent to respond:*

There are approximately 2,000 FBI National Academy graduates that will respond to the FBI National Academy Post-Course Questionnaire for Graduates. It is predicted that we will receive a 75% respond rate. The average response time for reading the directions for the FBI National Academy Post-Course Questionnaire for Graduates for the FBI National Academy graduates is estimated to be 2 minutes; time to complete the survey is estimated to be 30 minutes.

There are approximately 2,000 FBI National Academy graduates who have identified their supervisors that will respond to the FBI National Academy Post-Course Questionnaire for Supervisors of Graduates. It is predicted that we will receive a 70% respond rate. The average response time for reading the directions for the FBI National Academy Post-Course Questionnaire for Supervisors of Graduates for the supervisors is estimated to be 2 minutes; time to complete the survey is estimated to be 30 minutes.

The total hour burden for both surveys is 2,088 hours.

6. *An estimate of the total public burden (in hours) associated with the collection:* The average hour burden for completing all the surveys combined is 3,088 hours.

If additional information is required, contact: Jerri Murray, Department Clearance Officer, United States Department of Justice, Policy and Planning Staff, Justice Management Division, Two Constitution Square, 145 N Street NE., Room 2E–508, Washington, DC 20530.

Dated: June 13, 2012.

Jerri Murray,

Department Clearance Officer, PRA, United States Department of Justice.

[FR Doc. 2012–14778 Filed 6–15–12; 8:45 am]

BILLING CODE 4410–02–P

DEPARTMENT OF JUSTICE

Federal Bureau of Investigation

[OMB Number 1110–0045]

Agency Information Collection Activities; Proposed Collection, Comments Requested: Customer Satisfaction Assessment

ACTION: 60-day notice of information collection under review.

The Department of Justice, Federal Bureau of Investigation, Laboratory Division will be submitting the following information collection request to the Office of Management and Budget (OMB) for review and clearance in accordance with established review procedures of the Paperwork Reduction Act of 1995. The proposed information collection is published to obtain comments from the public and affected agencies. Comments are encouraged and will be accepted until August 17, 2012. This process is conducted in accordance with 5 CFR 1320.10.

All comments and suggestions, or questions regarding additional information, to include obtaining a copy of the proposed information collection instrument with instructions, should be directed to Catherine E. Theisen, Quality Manager, FBI Laboratory, 2501 Investigation Parkway, Quantico, Virginia 22135.

Written comments and suggestions from the public and affected agencies concerning the proposed collection of information are encouraged. Comments should address one or more of the following four points:

1. Evaluate whether the proposed collection of information is necessary for the proper performance of the functions of the agency, including whether the information will have practical utility;

2. Evaluate the accuracy of the agency's estimate of the burden of the proposed collection of information, including the validity of the methodology and assumptions used;

3. Enhance the quality, utility, and clarity of the information to be collected; and

4. Minimize the burden of the collection of information on those who are to respond, including the use of automated, electronic, mechanical, or other technological collection techniques of other forms of information technology, e.g., permitting electronic submission of responses.

Overview of This Information Collection

1. *Type of information collection:* Customer survey.

2. *The title of the form/collection:* Customer Satisfaction Assessment.

3. *The agency form number, if any, and the applicable component of the department sponsoring the collection:* Form (form number to be assigned by the forms desk); Laboratory Division, Federal Bureau of Investigation, Department of Justice.

4. *Affected public who will be asked or required to respond, as well as a brief abstract:* Primary—Local and state law enforcement agencies. This collection is needed to evaluate the quality of services provided by the FBI Laboratory.

5. *An estimate of the total number of respondents and the amount of time estimated for an average respondent to respond:* It is estimated that there will be 5,000 respondents at 5 minutes per form.

6. *An estimate of the total public burden (in hours) associated with this collection:* There are approximately 416 hours annual burden associated with this information collection.

If additional information is required contact: Jerri Murray, Department Clearance Officer, Justice Management Division, United States Department of Justice, Policy and Planning Staff, 145 N Street NE., Room 2E–508, Washington, DC 20530.

Dated: June 13, 2012.

Jerri Murray,

Department Clearance Officer, PRA, United States Department of Justice.

[FR Doc. 2012–14779 Filed 6–15–12; 8:45 am]

BILLING CODE 4410–02–P

DEPARTMENT OF JUSTICE

Office of Justice Programs

[OMB Number 1121–0021]

Agency Information Collection Activities; Proposed Collection; Comments Requested: Accounting System and Financial Capability Questionnaire

ACTION: 60-Day Notice of Information Collection Under Review.

The Department of Justice, Office of Justice Programs will be submitting the following information collection request to the Office of Management and Budget (OMB) for review and clearance in accordance with review procedures of the Paperwork Reduction Act of 1995. The proposed information collection is published to obtain comments from the public and affected agencies. If granted, the approval is valid for three years.

All comments and suggestions, or questions regarding additional information, to include obtaining a copy of the proposed information collection instrument with instructions, should be directed to should be directed to the Office of the Chief Financial Officer, Office of Justice Programs, U.S. Department of Justice, Attention: Leigh Benda, Chief Financial Officer, 810 7th St. NW., Washington, DC 20531. Comments will be accepted for 60 days until August 17, 2012. This process is conducted in accordance with 5 CFR 1320.10.

Written comments and suggestions from the public and affected agencies concerning the proposed collection of information are encouraged. Your comments should address one or more of the following four points:

— Evaluate whether the proposed collection of information is necessary for the proper performance of the functions of the agency, including whether the information will have practical utility;
— Evaluate the accuracy of the agencies estimate of the burden of the proposed collection of information, including the validity of the methodology and assumptions used;
— Enhance the quality, utility, and clarity of the information to be collected; and
— Minimize the burden of the collection of information on those who are to respond, including through the use of appropriate automated, electronic, mechanical, or other technological collection techniques or other forms of information technology, e.g., permitting electronic submission of responses.

Overview of This Information

(1) *Type of information collection:* Extension, without change of a currently approved collection.

(2) *The title of the form/collection:* Accounting System and Financial Capability Questionnaire.

(3) *Agency Form Number:* 7120/1. Component Sponsoring Collection: Office of the Chief Financial Officer, Office of Justice Programs, Department of Justice.

(4) *Affected public who will be asked or required to respond, as well as a brief abstract. Primary:* Business or other for-profit entities and not-for-profit institutions. Other: None. The purpose of the Accounting System and Financial Capability Questionnaire is to assess the financial risk of potential recipients in administering Federal funds in accordance with OMB Circular A–110 and 28 CFR part 70.

(5) *An estimate of the total number of respondents and the amount of time estimated for an average respondent to respond/reply:* Total of 100 respondents estimated, at 4 hours each.

(6) *An estimate of the total public burden (in hours) associated with the collection:* The estimated total public burden associated with this information is 400.

If additional information is required contact: Jerri Murray, Department Clearance Officer, United States Department of Justice, Justice Management Division, Policy and Planning Staff, Two Constitution Square, 145 N Street NE., Washington, DC 20530.

Dated: June 13, 2012.

Jerri Murray,

Department Clearance Officer, PRA, U.S. Department of Justice.

[FR Doc. 2012–14777 Filed 6–15–12; 8:45 am]

BILLING CODE 4410–18–P

DEPARTMENT OF JUSTICE

Office of Justice Programs

[OMB Number 1121–0243]

Agency Information Collection Activities; Proposed Collection; Comments Requested: Office of Justice Programs' Community Partnership Grants Management System (GMS)

ACTION: 60-Day Notice of Information Collection under Review.

The Department of Justice (DOJ), Office of Justice Programs (OJP), will be submitting the following information collection request to the Office of Management and Budget (OMB) for review and approval in accordance with the Paperwork Reduction Act of 1995. The proposed information collection is published to obtain comments from the public and affected agencies. Comments are encouraged and will be accepted for sixty days (60) until August 17, 2012. This process is conducted in accordance with 5 CFR 1320.10.

If you have additional comments on the estimated public burden or associated response time, suggestions, or need a copy of the proposed information collection instrument with instructions or additional information, please contact: Maria Swineford, (202) 616–0109, Office of Audit, Assessment, and Management, Office of Justice Programs, U.S. Department of Justice, 810 Seventh Street NW., Washington, DC 20531 or *maria.swineford@usdoj.gov.*

Written comments and suggestions from the public and affected agencies concerning the proposed collection of information are encouraged. Your comments should address one or more of the following four points:

—Evaluate whether the proposed collection of information is necessary for the proper performance of the functions of the agency, including whether the information will have practical utility;
—Evaluate the accuracy of the agency's estimate of the burden of the proposed collection of information, including the validity of the methodology and assumptions used;
—Enhance the quality, utility, and clarity of the information to be collected; and
—Minimize the burden of the collection of information on those who are to respond, including through the use of appropriate automated, electronic, mechanical, or other technological collection techniques or other forms of information technology, e.g., permitting electronic submission of responses.

Overview of This Information

(1) *Type of Information Collection:* Renewal of a currently approved collection (1121–0243).

(2) *The Title of the Form/Collection:* Community Partnership Grants Management System (GMS).

(3) *The Agency Form Number, if any, and the Applicable Component of the Department Sponsoring the Collection:*

No form number available. Office of Justice Programs, Department of Justice.

(4) *Affected Public Who Will Be Asked or Required to Respond, as Well as a Brief Abstract:* The primary respondents are State, Local or Tribal Governments applying for grants. GMS is the OJP web-based grants applications system and award management system. GMS provides automated support throughout the award lifecycle. GMS facilitates reporting to Congress and other interested agencies. The system provides essential information required to comply with the Federal Funding Accountability and Transparency Act of 2006 (FFATA). GMS has also been designated the OJP official system of record for grants activities by the National Archives and Records Administration (NARA).

(5) *An Estimate of the Total Number of Respondents and the Amount of Time Estimated for an Average Respondent to Respond:* An estimated 10,128 organizations will respond to GMS and on average it will take each of them up to 14 hours to complete various award lifecycle processes within the system varying from application submission, award management and reporting, and award closeout.

(6) *An Estimate of the Total Public Burden (in hours) Associated With the collection:* The estimated public burden associated with this application is 142,100 hours.

If additional information is required contact: Jerri Murray, Department Clearance Officer, United States Department of Justice, Justice Management Division, Policy and Planning Staff, Two Constitution Square, 145 N Street NE., Washington, DC 20530.

Dated: June 13, 2012.

Jerri Murray,

Department Clearance Officer, PRA, U.S. Department of Justice.

[FR Doc. 2012–14746 Filed 6–15–12; 8:45 am]

BILLING CODE 4410–18–P

DEPARTMENT OF LABOR

Office of the Secretary

Agency Information Collection Activities; Submission for OMB Review; Comment Request; Cadmium in General Industry Standard

ACTION: Notice.

SUMMARY: The Department of Labor (DOL) is submitting the Occupational Safety and Health Administration (OSHA) sponsored information collection request (ICR) titled, ''Cadmium in General Industry Standard,'' to the Office of Management and Budget (OMB) for review and approval for continued use in accordance with the Paperwork Reduction Act (PRA) of 1995 (44 U.S.C. 3501 *et seq.*).

DATES: Submit comments on or before July 18, 2012.

ADDRESSES: A copy of this ICR with applicable supporting documentation; including a description of the likely respondents, proposed frequency of response, and estimated total burden may be obtained from the RegInfo.gov Web site, *http://www.reginfo.gov/public/do/PRAMain,* on the day following publication of this notice or by contacting Michel Smyth by telephone at 202–693–4129 (this is not a toll-free number) or sending an email to *DOL_PRA_PUBLIC@dol.gov.*

Submit comments about this request to the Office of Information and Regulatory Affairs, Attn: OMB Desk Officer for DOL–OSHA, Office of Management and Budget, Room 10235, New Executive Office Building, Washington, DC 20503, Telephone: 202–395–6929/Fax: 202–395–6881 (these are not toll-free numbers), email: *OIRA_submission@omb.eop.gov.*

FOR FURTHER INFORMATION: Contact Michel Smyth by telephone at 202–693–4129 (this is not a toll-free number) or by email at *DOL_PRA_PUBLIC@dol.gov.*

SUPPLEMENTARY INFORMATION: The Cadmium in General Industry Standard requires covered employers to monitor worker exposure to cadmium, to provide medical surveillance, to train workers about the hazards of cadmium in the workplace, and to establish and maintain accurate records of worker exposure to cadmium. Employers, workers, physicians, and the government use these records to ensure workers are not being harmed by exposure to cadmium.

This information collection is subject to the PRA. A Federal agency generally cannot conduct or sponsor a collection of information, and the public is generally not required to respond to an information collection, unless it is approved by the OMB under the PRA and displays a currently valid OMB Control Number. In addition, notwithstanding any other provisions of law, no person shall generally be subject to penalty for failing to comply with a collection of information if the collection of information does not display a valid OMB Control Number. *See* 5 CFR 1320.5(a) and 1320.6. The DOL obtains OMB approval for this information collection under OMB Control Number 1218–0185. The current OMB approval is scheduled to expire on June 30, 2012; however, it should be noted that existing information collection requirements submitted to the OMB receive a month-to-month extension while they undergo review. For additional information, see the related notice published in the **Federal Register** on March 6, 2012 (77 FR 13359).

Interested parties are encouraged to send comments to the OMB, Office of Information and Regulatory Affairs at the address shown in the **ADDRESSES** section within 30 days of publication of this notice in the **Federal Register**. In order to help ensure appropriate consideration, comments should mention OMB Control Number 1218–0185. The OMB is particularly interested in comments that:

- Evaluate whether the proposed collection of information is necessary for the proper performance of the functions of the agency, including whether the information will have practical utility;
- Evaluate the accuracy of the agency's estimate of the burden of the proposed collection of information, including the validity of the methodology and assumptions used;
- Enhance the quality, utility, and clarity of the information to be collected; and
- Minimize the burden of the collection of information on those who are to respond, including through the use of appropriate automated, electronic, mechanical, or other technological collection techniques or other forms of information technology, e.g., permitting electronic submission of responses.

Agency: DOL–OSHA.

Title of Collection: Cadmium in General Industry Standard.

OMB Control Number: 1218–0185.

Affected Public: Private Sector—businesses or other for-profits.

Total Estimated Number of Respondents: 49,734.

Total Estimated Number of Responses: 236,177.

Total Estimated Annual Burden Hours: 84,307.

Total Estimated Annual Other Costs Burden: $4,799,475.

Dated: June 12, 2012.

Michel Smyth,

Departmental Clearance Officer.

[FR Doc. 2012–14800 Filed 6–15–12; 8:45 am]

BILLING CODE 4510–26–P

DEPARTMENT OF LABOR

Office of the Secretary

Agency Information Collection Activities; Submission for OMB Review; Comment Request; Cadmium in Construction Standard

ACTION: Notice.

SUMMARY: The Department of Labor (DOL) is submitting the Occupational Safety and Health Administration (OSHA) sponsored information collection request (ICR) titled, ''Cadmium in Construction Standard,'' to the Office of Management and Budget (OMB) for review and approval for continued use in accordance with the Paperwork Reduction Act (PRA) of 1995 (44 U.S.C. 3501 et seq.).

DATES: Submit comments on or before July 18, 2012.

ADDRESSES: A copy of this ICR with applicable supporting documentation; including a description of the likely respondents, proposed frequency of response, and estimated total burden may be obtained from the RegInfo.gov Web site, *http://www.reginfo.gov/public/do/PRAMain,* on the day following publication of this notice or by contacting Michel Smyth by telephone at 202–693–4129 (this is not a toll-free number) or sending an email to *DOL_PRA_PUBLIC@dol.gov.*

Submit comments about this request to the Office of Information and Regulatory Affairs, Attn: OMB Desk Officer for DOL–OSHA, Office of Management and Budget, Room 10235, New Executive Office Building, Washington, DC 20503, Telephone: 202–395–6929/Fax: 202–395–6881 (these are not toll-free numbers), email: *OIRA_submission@omb.eop.gov.*

FOR FURTHER INFORMATION: Contact Michel Smyth by telephone at 202–693–4129 (this is not a toll-free number) or by email at *DOL_PRA_PUBLIC@dol.gov.*

SUPPLEMENTARY INFORMATION: The Cadmium in Construction Standard requires covered employers to monitor worker exposure to cadmium, to provide medical surveillance to workers, to train workers about the hazards of cadmium in the workplace, and to establish and maintain accurate worker and exposure records. Employers, workers, physicians, and the government use these records to ensure workers are not being harmed by exposure to cadmium.

This information collection is subject to the PRA. A Federal agency generally cannot conduct or sponsor a collection of information, and the public is generally not required to respond to an information collection, unless it is approved by the OMB under the PRA and displays a currently valid OMB Control Number. In addition, notwithstanding any other provisions of law, no person shall generally be subject to penalty for failing to comply with a collection of information if the collection of information does not display a valid OMB Control Number. *See* 5 CFR 1320.5(a) and 1320.6. The DOL obtains OMB approval for this information collection under OMB Control Number 1218–0186. The current OMB approval is scheduled to expire on June 30, 2012; however, it should be noted that existing information collection requirements submitted to the OMB receive a month-to-month extension while they undergo review. For additional information, see the related notice published in the **Federal Register** on March 6, 2012 (77 FR 13357).

Interested parties are encouraged to send comments to the OMB, Office of Information and Regulatory Affairs at the address shown in the **ADDRESSES** section within 30 days of publication of this notice in the **Federal Register**. In order to help ensure appropriate consideration, comments should mention OMB Control Number 1218–0186. The OMB is particularly interested in comments that:

- Evaluate whether the proposed collection of information is necessary for the proper performance of the functions of the agency, including whether the information will have practical utility;
- Evaluate the accuracy of the agency's estimate of the burden of the proposed collection of information, including the validity of the methodology and assumptions used;
- Enhance the quality, utility, and clarity of the information to be collected; and
- Minimize the burden of the collection of information on those who are to respond, including through the use of appropriate automated, electronic, mechanical, or other technological collection techniques or other forms of information technology, e.g., permitting electronic submission of responses.

Agency: DOL–OSHA.

Title of Collection: Cadmium in Construction Standard.

OMB Control Number: 1218–0186.

Affected Public: Private Sector—businesses or other for-profits.

Total Estimated Number of Respondents: 10,000.

Total Estimated Number of Responses: 261,889.

Total Estimated Annual Burden Hours: 37,231.

Total Estimated Annual Other Costs Burden: $1,930,703.

Dated: June 12, 2012.

Michel Smyth,

Departmental Clearance Officer.

[FR Doc. 2012–14801 Filed 6–15–12; 8:45 am]

BILLING CODE 4510–26–P

DEPARTMENT OF LABOR

Bureau of Labor Statistics

Proposed Collection, Comment Request

ACTION: Notice.

SUMMARY: The Department of Labor, as part of its continuing effort to reduce paperwork and respondent burden, conducts a pre-clearance consultation program to provide the general public and Federal agencies with an opportunity to comment on proposed and/or continuing collections of information in accordance with the Paperwork Reduction Act of 1995 (PRA95) [44 U.S.C. 3506(c) (2)(A)]. This program helps to ensure that requested data can be provided in the desired format, reporting burden (time and financial resources) is minimized, collection instruments are clearly understood, and the impact of collection requirements on respondents can be properly assessed. The Bureau of Labor Statistics (BLS) is soliciting comments concerning the proposed extension of the ''Consumer Price Index Housing Survey.'' A copy of the proposed information collection request (ICR) can be obtained by contacting the individual listed below in the **ADDRESSES** section of this notice.

DATES: Written comments must be submitted to the office listed in the **ADDRESSES** section of this notice on or before *August 17, 2012.*

ADDRESSES: Send comments to Nora Kincaid, BLS Clearance Officer, Division of Management Systems, Bureau of Labor Statistics, Room 4080, 2 Massachusetts Avenue NE., Washington, DC 20212. Written comments also may be transmitted by fax to 202–691–5111 (this is not a toll free number).

FOR FURTHER INFORMATION CONTACT: Nora Kincaid, BLS Clearance Officer, telephone 202–691–7628 (this is not a toll free number). (See **ADDRESSES** section.)

SUPPLEMENTARY INFORMATION:

I. Background

The Consumer Price Index (CPI) is the timeliest instrument compiled by the U.S. Government that is designed to measure changes in the purchasing power of the urban consumer's dollar. The CPI is used most widely as a measure of inflation, and is used in the formulation of economic policy. It also is used as a deflator of other economic series, that is, to adjust other series for price changes and to translate these series into inflation-free dollars.

II. Current Action

Office of Management and Budget clearance is being sought for the CPI Housing Survey. This request addresses both the ongoing collection activities associated with compilation of the shelter component of the Consumer Price Index and the replacement of the base sample, selected using 1990 Census data. The on-going replacement of sample requires the creation of new segments of rental dwellings in all 87 Primary Sampling Units (PSUs). This action assures the ongoing activities of rent data collection and updates the sample such that the estimates are sufficient and less likely to be biased.

III. Desired Focus of Comments

The Bureau of Labor Statistics is particularly interested in comments that:

- Evaluate whether the proposed collection of information is necessary for the proper performance of the functions of the agency, including whether the information will have practical utility.
- Evaluate the accuracy of the agency's estimate of the burden of the proposed collection of information, including the validity of the methodology and assumptions used.
- Enhance the quality, utility, and clarity of the information to be collected.
- Minimize the burden of the collection of information on those who are to respond, including through the use of appropriate automated, electronic, mechanical, or other technological collection techniques or other forms of information technology, e.g., permitting electronic submissions of responses.

Type of Review: Extension.
Agency: Bureau of Labor Statistics.
Title: CPI Housing Survey.
OMB Number: 1220–0163.
Affected Public: Individuals or households; business or other for-profit.
Total Respondents: 172,240.
Frequency: Semi-annually.
Total Responses: 154,937.
Average Time per Response: 5.6826 minutes.
Estimated Total Burden Hours: 14,674 hours.
Total Burden Cost (capital/startup): $0.
Total Burden Cost (operating/maintenance): $0.

Comments submitted in response to this notice will be summarized and/or included in the request for Office of Management and Budget approval of the information collection request; they also will become a matter of public record.

Signed at Washington, DC, this 12th day of June 2012.

Kimberley D. Hill,
Chief, Division of Management Systems, Bureau of Labor Statistics.

[FR Doc. 2012–14742 Filed 6–15–12; 8:45 am]
BILLING CODE 4510–24–P

NATIONAL ARCHIVES AND RECORDS ADMINISTRATION

Agency Information Collection Activities: Proposed Collection; Comment Request

AGENCY: National Archives and Records Administration (NARA).

ACTION: Notice.

SUMMARY: NARA is giving public notice that the agency proposes an extension of an approved information collection, Independent Researcher Listing Application, NA Form 14115, used by independent researchers to provide their contact information. The public is invited to comment on the proposed information collections pursuant to the Paperwork Reduction Act of 1995.

DATES: Written comments must be received on or before August 17, 2012 to be assured of consideration.

ADDRESSES: Comments should be sent to: Paperwork Reduction Act Comments (NHP), Room 4400, National Archives and Records Administration, 8601 Adelphi Rd, College Park, MD 20740–6001; or faxed to 301–713–7409; or electronically mailed to *tamee.fechhelm@nara.gov.*

FOR FURTHER INFORMATION CONTACT: Requests for additional information or copies of the proposed information collections and supporting statements should be directed to Tamee Fechhelm at telephone number 301–837–1694 or fax number 301–713–7409.

SUPPLEMENTARY INFORMATION: Pursuant to the Paperwork Reduction Act of 1995 (Pub. L. 104–13), NARA invites the general public and other Federal agencies to comment on proposed information collections. The comments and suggestions should address one or more of the following points: (a) Whether the proposed information collections are necessary for the proper performance of the functions of NARA; (b) the accuracy of NARA's estimate of the burden of the proposed information collections; (c) ways to enhance the quality, utility, and clarity of the information to be collected; and (d) ways to minimize the burden of the collection of information on respondents, including the use of information technology; and (e) whether small businesses are affected by this collection. The comments that are submitted will be summarized and included in the NARA request for Office of Management and Budget (OMB) approval. All comments will become a matter of public record. In this notice, NARA is soliciting comments concerning the following information collections:

Title: Independent Researcher Listing Application.
OMB number: 3095–0054.
Agency form numbers: NA Form 14115.
Type of review: Regular.
Affected public: Individuals or households.
Estimated number of respondents: 458.
Estimated time per response: 10 minutes.
Frequency of response: On occasion.
Estimated total annual burden hours: 76.
Abstract: In the past, the National Archives has made use of various lists of independent researchers who perform freelance research for hire in the Washington, DC, area. We have sent these lists upon request to researchers who could not travel to the metropolitan area to conduct their own research. To better accommodate both the public and NARA staff, the Customer Services Division (RD–DC) of the National Archives maintains a listing of independent researchers for the public. All interested independent researchers provide their contact information via this form. Collecting contact and other key information from each independent researcher and providing such information to the public when deemed appropriate will only increase business. This form is not a burden in any way to any independent researcher who voluntarily submits a completed form. Inclusion on the list will not be viewed or advertised as an endorsement by the National Archives and Records Administration (NARA). The listing is compiled and disseminated as a service to the public.

Dated: May 30, 2012.

Michael L. Wash,

Executive for Information Services/CIO.

[FR Doc. 2012–14771 Filed 6–15–12; 8:45 am]

BILLING CODE 7515–01–P

NATIONAL CREDIT UNION ADMINISTRATION

Sunshine Act; Notice of Agency Meeting

TIME AND DATE: 10:00 a.m., Thursday, June 21, 2012.

PLACE: Board Room, 7th Floor, Room 7047. 1775 Duke Street (All visitors must use Diagonal Road Entrance), Alexandria, VA 22314–3428.

STATUS: Open.

MATTERS TO BE CONSIDERED:

1. NCUA's Rules and Regulations, Credit Union Service Organizations.

RECESS: 10:45 a.m.

TIME AND DATE: 11:00 a.m., Thursday, June 21, 2012.

PLACE: Board Room, 7th Floor, Room 7047, 1775 Duke Street, Alexandria, VA 22314–3428.

STATUS: Closed.

MATTERS TO BE CONSIDERED: 1. Consideration of Supervisory Activities (5). Closed pursuant to exemptions (8), (9)(i)(B) and 9(ii).

2. Personnel. Closed pursuant to Exemption (2).

FOR FURTHER INFORMATION CONTACT: Mary Rupp, Secretary of the Board, Telephone: 703–518–6304.

Mary Rupp,

Board Secretary.

[FR Doc. 2012–14945 Filed 6–14–12; 4:15 pm]

BILLING CODE 7535–01–P

NUCLEAR REGULATORY COMMISSION

[Docket Nos. 50–309, 72–30; NRC–2012–0137; License No. DPR–36]

In the Matter of Maine Yankee Atomic Power Company; Maine Yankee Atomic Power Station; Confirmatory Order Modifying License (Effective Immediately)

AGENCY: Nuclear Regulatory Commission.

ACTION: The U.S. Nuclear Regulatory Commission (NRC or the Commission) issued a Confirmatory Order to Maine Yankee Atomic Power Company (Maine Yankee or the Licensee), to address statutory requirements and the Commission's regulation regarding foreign ownership, control, or domination (FOCD).

FOR FURTHER INFORMATION CONTACT: John Goshen, Project Manager, Division of Spent Fuel Storage and Transportation, Office of Nuclear Material Safety and Safeguards, U.S. Nuclear Regulatory Commission, Washington, DC 20555. Telephone: (301) 492–3325; Fax number: (301) 492–3342; Email: *john.goshen@nrc.gov.*

I

Maine Yankee Atomic Power Company (Maine Yankee or the Licensee), is the holder of Facility Operating License No. DPR–36, pursuant to 10 CFR Part 50, which authorizes the receipt, possession, and use of byproduct and special nuclear material in accordance with the Commission's regulations in 10 CFR Parts 30, 40, and 70 at the Maine Yankee Atomic Power Station and storage of spent nuclear fuel under the general license provisions of 10 CFR Part 72, Subpart K at the Maine Yankee Atomic Power Station. The facility is located at the Licensee's site in Wiscasset, Maine.

II

On December 21, 2011, as supplemented April 24, 2012, Maine Yankee submitted a letter to the U.S. Nuclear Regulatory Commission (NRC or the Commission) (Agencywide Documents Access and Management System (ADAMS) Accession Nos. ML11364A053 and ML12125A042), stating that it had implemented a Negation Action Plan by adopting a Board of Directors Resolution that prevents any potential for foreign control over safety and security matters, including access to security information and to special nuclear material in compliance with Section 103d of the Atomic Energy Act of 1954, as amended (AEA) and the Commission's regulation under Title 10 of the *Code of Federal Regulations* (10 CFR) 50.38. The Board of Directors Resolution was passed on December 14, 2011. The Board of Directors Resolution was enclosed in a Foreign Ownership, Control, and Influence (FOCI) application filed with the NRC on January 3, 2012, and also provided in a letter to the NRC dated February 23, 2012 (ADAMS Accession No. ML12066A040).

The Negation Action Plan, as modified in the April 24, 2012 letter, contains provisions related to foreign ownership, control, or domination that include, but are not limited to, the following items: (1) Access to classified and safeguards information and to special nuclear material shall be controlled by Maine Yankee under the direction of the Chief Nuclear Officer (CNO) of Maine Yankee; (2) Decisions related to safety and security of special nuclear material, and related to access to classified and safeguards information and to special nuclear material, are specifically delegated by the Maine Yankee Board of Directors to the CNO of Maine Yankee; (3) The CNO of Maine Yankee shall be a U.S. citizen and shall execute a certification acknowledging his or her special duties to protect classified and safeguards information, to protect public health and safety and common defense and security relative to special nuclear material, and to report any foreign ownership, control, or domination issue to the NRC; (4) Directors and officers of foreign-controlled sponsor companies shall not have access to safeguards or classified information, and shall not have access to special nuclear material in the possession of Maine Yankee; (5) Directors and officers of Maine Yankee who are representatives of a foreign-controlled owner shall be excluded from access to classified information and to special nuclear material; and (6) Directors and officers of Maine Yankee who are representatives of a foreign-controlled owner shall execute certifications acknowledging their exclusion from access to classified information and special nuclear material, and acknowledging their commitment to take no action to circumvent the protective measures established by Maine Yankee to negate any foreign control or influence with respect to radiological safety and security of special nuclear material.

The NRC has reviewed and evaluated the executed Negation Action Plan and Board Resolution submitted by Maine Yankee, and finds the plan and implementing actions are acceptable to negate the foreign ownership, control, or domination issues and satisfy NRC requirements as applicable when the plan was submitted and at this time.

III

In order to meet the statutory requirements of Section 103d of the AEA and 10 CFR 50.38 as discussed above, the Commission has determined that the Facility Operating License for Maine Yankee Atomic Power Station must be modified to include provisions with respect to the measures identified in Section II of this Confirmatory Order. The requirements needed to effectuate the foregoing are set forth in Section IV below. On May 31, 2012, Maine Yankee consented to the license modifications set forth in Section IV below. Maine Yankee further agreed in its letter dated

May 31, 2012, that it has waived its right to a hearing on this Confirmatory Order, and, therefore, that the terms of the Confirmatory Order are effective upon issuance.

The NRC has concluded that the License modifications set forth in Section IV are acceptable and necessary to ensure continued compliance with the AEA. Based on the above and Maine Yankee's consent, this Confirmatory Order is immediately effective upon issuance.

IV

Accordingly, pursuant to Section 103d of the Atomic Energy Act of 1954, as amended, and the Commission's regulations in 10 CFR 2.202, 10 CFR Part 50, and 10 CFR Part 72, *it is hereby ordered, effective immediately, that license no. DPR-36 is modified as follows:*

(1) The Maine Yankee Atomic Power Negation Action Plan included with the letters dated December 21, 2011, and April 24, 2012, and the Board Resolution included with the FOCI application filed on January 3, 2012, and provided in a letter to the NRC dated February 23, 2012, shall be adhered to and may not be modified in any respect concerning decision-making authority over the Maine Yankee Independent Spent Fuel Storage Installation without the prior written consent of the Director, Office of Nuclear Material Safety and Safeguards, or designee.

(2) Access to classified and safeguards information and to special nuclear material shall be controlled by Maine Yankee Atomic Power Company under the direction of the CNO of Maine Yankee Atomic Power Company.

(3) Decisions related to safety and security of special nuclear material, and related to access to classified and safeguards information and to special nuclear material, are specifically delegated by the Maine Yankee Atomic Power Company Board of Directors to the CNO of Maine Yankee Atomic Power Company.

(4) The CNO of Maine Yankee Atomic Power Company shall be a U.S. citizen and shall execute a certification acknowledging his or her special duties to protect classified and safeguards information, to protect public health and safety and common defense and security relative to special nuclear material, and to report any foreign ownership, control, or domination issue to the NRC.

(5) Directors and Officers of any foreign controlled owner shall not be permitted to hold positions, and shall be excluded from holding positions, at Maine Yankee Atomic Power Company that would enable them to control the policy and practices of Maine Yankee Atomic Power Company in the performance of its licensed activities, and shall not have access to classified information or safeguards information related to the Maine Yankee facility, or access to or custody of special nuclear material related to the Maine Yankee facility.

(6) Maine Yankee Atomic Power Company shall cause to be transmitted to the Director, Office of Nuclear Material Safety and Safeguards, within 30 days of knowledge of a filing with the U.S. Securities and Exchange Commission, any Schedules 13D or 13G filed pursuant to the Securities and Exchange Act of 1934 that disclose beneficial ownership of any registered classes of Maine Yankee Atomic Power Company stock.

V

In accordance with 10 CFR 2.202, any person adversely affected by this Confirmatory Order, other than the Licensee, may request a hearing within 20 days of the date of this Order. Where good cause is shown, consideration will be given to extending the time to request a hearing. A request for extension of time must be made in writing to the Director, Office of Nuclear Material Safety and Safeguards, U.S. Nuclear Regulatory Commission, Washington, DC 20555, and include a statement of good cause for the extension.

If a person other than the Licensee requests a hearing, that person shall set forth with particularity the manner in which his interest is adversely affected by this Order and shall address the applicable criteria set forth in 10 CFR 2.202 and 2.309.

If a hearing is granted, the Commission will issue an Order designating the time and place of any hearings. If a hearing is held, the issue to be considered at such hearing shall be whether this Order should be sustained.

All documents filed in NRC adjudicatory proceedings, including a request for hearing, a petition for leave to intervene, any motion or other document filed in the proceeding prior to the submission of a request for hearing or petition to intervene, and documents filed by interested governmental entities participating under 10 CFR 2.315(c), must be filed in accordance with the NRC E-Filing rule (72 FR 49139, August 28, 2007). The E-Filing process requires participants to submit and serve all adjudicatory documents over the internet, or in some cases to mail copies on electronic storage media. Participants may not submit paper copies of their filings unless they seek an exemption in accordance with the procedures described below.

To comply with the procedural requirements of E-Filing, at least 10 days prior to the filing deadline, the participant should contact the Office of the Secretary by email at *hearing.docket@nrc.gov,* or by telephone at (301) 415–1677, to request (1) a digital ID certificate, which allows the participant (or its counsel or representative) to digitally sign documents and access the E-Submittal server for any proceeding in which it is participating; and (2) advise the Secretary that the participant will be submitting a request or petition for hearing (even in instances in which the participant, or its counsel or representative, already holds an NRC-issued digital ID certificate). Based upon this information, the Secretary will establish an electronic docket for the hearing in this proceeding if the Secretary has not already established an electronic docket.

Information about applying for a digital ID certificate is available on NRC's public Web site at *http://www.nrc.gov/site-help/e-submittals/apply-certificates.html.* System requirements for accessing the E-Submittal server are detailed in NRC's ''Guidance for Electronic Submission,'' which is available on the agency's public Web site at *http://www.nrc.gov/site-help/e-submittals.html.* Participants may attempt to use other software not listed on the web site, but should note that the NRC's E-Filing system does not support unlisted software, and the NRC Meta System Help Desk will not be able to offer assistance in using unlisted software.

If a participant is electronically submitting a document to the NRC in accordance with the E-Filing rule, the participant must file the document using the NRC's online, web-based submission form. In order to serve documents through the Electronic Information Exchange, users will be required to install a web browser plug-in from the NRC web site. Further information on the web-based submission form, including the installation of the Web browser plug-in, is available on the NRC's public Web site at *http://www.nrc.gov/site-help/e-submittals.html.*

Once a participant has obtained a digital ID certificate and a docket has been created, the participant can then submit a request for hearing or petition for leave to intervene. Submissions should be in Portable Document Format (PDF) in accordance with NRC guidance

available on the NRC public Web site at *http://www.nrc.gov/site-help/e-submittals.html.* A filing is considered complete at the time the documents are submitted through the NRC's E-Filing system. To be timely, an electronic filing must be submitted to the E-Filing system no later than 11:59 p.m. Eastern Time on the due date. Upon receipt of a transmission, the E-Filing system time-stamps the document and sends the submitter an email notice confirming receipt of the document. The E-Filing system also distributes an email notice that provides access to the document to the NRC Office of the General Counsel and any others who have advised the Office of the Secretary that they wish to participate in the proceeding, so that the filer need not serve the documents on those participants separately. Therefore, applicants and other participants (or their counsel or representative) must apply for and receive a digital ID certificate before a hearing request/petition to intervene is filed so that they can obtain access to the document via the E-Filing system.

A person filing electronically using the agency's adjudicatory E-Filing system may seek assistance by contacting the NRC Meta System Help Desk through the ''Contact Us'' link located on the NRC Web site at *http://www.nrc.gov/site-help/e-submittals.html,* by email at *MSHD.Resource@nrc.gov,* or by a toll-free call at (866) 672–7640. The NRC Meta System Help Desk is available between 8 a.m. and 8 p.m., Eastern Time, Monday through Friday, excluding government holidays.

Participants who believe that they have a good cause for not submitting documents electronically must file an exemption request, in accordance with 10 CFR 2.302(g), with their initial paper filing requesting authorization to continue to submit documents in paper format. Such filings must be submitted by: (1) First-class mail addressed to the Office of the Secretary of the Commission, U.S. Nuclear Regulatory Commission, Washington, DC 20555–0001, Attention: Rulemaking and Adjudications Staff; or (2) courier, express mail, or expedited delivery service to the Office of the Secretary, Sixteenth Floor, One White Flint North, 11555 Rockville Pike, Rockville, Maryland, 20852, Attention: Rulemaking and Adjudications Staff. Participants filing a document in this manner are responsible for serving the document on all other participants. Filing is considered complete by first-class mail as of the time of deposit in the mail, or by courier, express mail, or expedited delivery service upon depositing the document with the provider of the service. A presiding officer, having granted an exemption request from using E-Filing, may require a participant or party to use E-Filing if the presiding officer subsequently determines that the reason for granting the exemption from use of E-Filing no longer exists.

Documents submitted in adjudicatory proceedings will appear in NRC's electronic hearing docket, which is available to the public at *http://ehd1.nrc.gov/ehd/,* unless excluded pursuant to an order of the Commission, or the presiding officer. Participants are requested not to include personal privacy information, such as social security numbers, home addresses, or home phone numbers in their filings, unless an NRC regulation or other law requires submission of such information. With respect to copyrighted works, except for limited excerpts that serve the purpose of the adjudicatory filings and would constitute a Fair Use application, participants are requested not to include copyrighted materials in their submission.

A Request for Hearing Shall Not Stay the Immediate Effectiveness of this Order.

For the Nuclear Regulatory Commission.

Dated this 4th day of June 2012.

Catherine Haney,

Director, Office of Nuclear Material Safety and Safeguards.

[FR Doc. 2012–14760 Filed 6–15–12; 8:45 am]

BILLING CODE 7590–01–P

NUCLEAR REGULATORY COMMISSION

[Docket Nos. 50–213, 72–39; NRC–2012–0136; License No. DPR–61]

In the Matter of Connecticut Yankee Atomic Power Company; Haddam Neck Plant; Confirmatory Order Modifying License (Effective Immediately)

AGENCY: Nuclear Regulatory Commission.

ACTION: The U.S. Nuclear Regulatory Commission (NRC or the Commission) issued a Confirmatory Order to Connecticut Yankee Atomic Power Company (Connecticut Yankee or the Licensee), to address statutory requirements and the Commission's regulation regarding foreign ownership, control, or domination (FOCD).

FOR FURTHER INFORMATION CONTACT: John Goshen, Project Manager, Division of Spent Fuel Storage and Transportation, Office of Nuclear Material Safety and Safeguards, U.S. Nuclear Regulatory Commission, Washington, DC 20555. Telephone: (301) 492–3325; Fax number: (301) 492–3342; Email: *john.goshen@nrc.gov.*

I

Connecticut Yankee Atomic Power Company (Connecticut Yankee or the Licensee), is the holder of Facility Operating License No. DPR–61, pursuant to 10 CFR Part 50, which authorizes the receipt, possession, and use of byproduct and special nuclear material in accordance with the Commission's regulations in 10 CFR Parts 30, 40, and 70 and storage of spent nuclear fuel under the general license provisions of 10 CFR Part 72, Subpart K at the Haddam Neck Plant. The facility is located at the Licensee's site in Middlesex County, Connecticut.

II

On December 21, 2011, as supplemented April 24, 2012, Connecticut Yankee submitted a letter to the U.S. Nuclear Regulatory Commission (NRC or the Commission), (Agencywide Documents Access and Management System (ADAMS) Accession Nos. ML11364A053 and ML12124A230), stating that it had implemented a Negation Action Plan by adopting a Board of Directors Resolution that prevents any potential for foreign control over safety and security matters, including access to security information and to special nuclear material in compliance with Section 103d of the Atomic Energy Act of 1954, as amended (AEA) and the Commission's regulation under Title 10 of the Code of Federal Regulations (10 CFR) 50.38. The Board of Director's Resolution was passed on December 14, 2011. The Board of Directors Resolution was enclosed in a Foreign Ownership, Control, and Influence (FOCI) application filed with the NRC on January 3, 2012, and also provided in a letter to the NRC dated February 23, 2012 (ADAMS Accession No. ML12066A044).

The Negation Action Plan, as modified in the April 24, 2012 letter, contains provisions related to foreign ownership, control, or domination that include, but are not limited to, the following items: (1) Access to classified and safeguards information and to special nuclear material shall be controlled by Connecticut Yankee under the direction of the President and Chief Executive Officer (CEO) of Connecticut Yankee; (2) Decisions related to safety and security of special nuclear material, and related to access to classified and

safeguards information and to special nuclear material, are specifically delegated by the Connecticut Yankee Board of Directors to the President and CEO of Connecticut Yankee; (3) The President and CEO of Connecticut Yankee shall be a U.S. citizen and shall execute a certification acknowledging his or her special duties to protect classified and safeguards information, to protect public health and safety and common defense and security relative to special nuclear material, and to report any foreign ownership, control, or domination issue to the NRC; (4) Directors and officers of foreign-controlled sponsor companies shall not have access to safeguards or classified information, and shall not have access to special nuclear material in the possession of Connecticut Yankee; (5) Directors and officers of Connecticut Yankee who are representatives of a foreign-controlled owner shall be excluded from access to classified information and to special nuclear material; and (6) Directors and officers of Connecticut Yankee who are representatives of a foreign-controlled owner shall execute certifications acknowledging their exclusion from access to classified information and special nuclear material, and acknowledging their commitment to take no action to circumvent the protective measures established by Connecticut Yankee to negate any foreign control or influence with respect to radiological safety and security of special nuclear material.

The NRC has reviewed and evaluated the executed Negation Action Plan and Board Resolution submitted by Connecticut Yankee, and finds that the plan and implementing actions are acceptable to negate the foreign ownership, control, or domination issues and satisfy NRC requirements as applicable when the plan was submitted and at this time.

III

In order to meet the statutory requirements of Section 103d of the AEA and 10 CFR 50.38 as discussed above, the Commission has determined that the Facility Operating License for the Haddam Neck Plant must be modified to include provisions with respect to the measures identified in Section II of this Confirmatory Order. The requirements needed to effectuate the foregoing are set forth in Section IV below. On May 31, 2012, Connecticut Yankee consented to the license modifications set forth in Section IV below. Connecticut Yankee further agreed in its letter dated May 31, 2012, that it has waived its right to a hearing on this Confirmatory Order, and, therefore, the terms of the Confirmatory Order are effective upon issuance.

The NRC has concluded that the License modifications set forth in Section IV are acceptable and necessary to ensure continued compliance with the AEA. Based on the above and Connecticut Yankee's consent, this Confirmatory Order is immediately effective upon issuance.

IV

Accordingly, pursuant to Section 103d of the Atomic Energy Act of 1954, as amended, and the Commission's regulations in 10 CFR 2.202, 10 CFR Part 50, and 10 CFR Part 72, IT IS HEREBY ORDERED, EFFECTIVE IMMEDIATELY, THAT LICENSE NO. DPR–61 IS MODIFIED AS FOLLOWS:

(1) The Connecticut Yankee Atomic Power Company Negation Action Plan included with the letters dated December 21, 2011, and April 24, 2012, and the Board Resolution included with the FOCI application filed on January 3, 2012, and provided in a letter to the NRC dated February 23, 2012, shall be adhered to and may not be modified in any respect concerning decision-making authority over the Connecticut Yankee Independent Spent Fuel Storage Installation without the prior written consent of the Director, Office of Nuclear Material Safety and Safeguards, or designee.

(2) Access to classified and safeguards information and to special nuclear material shall be controlled by Connecticut Yankee Atomic Power Company under the direction of the President and CEO of Connecticut Yankee Atomic Power Company.

(3) Decisions related to safety and security of special nuclear material, and related to access to classified and safeguards information and to special nuclear material, are specifically delegated by the Connecticut Yankee Board of Directors to the President and CEO of Connecticut Yankee Atomic Power Company.

(4) The President and CEO of Connecticut Yankee Atomic Power Company shall be a U.S. citizen and shall execute a certification acknowledging his or her special duties to protect classified and safeguards information, to protect public health and safety and common defense and security relative to special nuclear material, and to report any foreign ownership, control, or domination issue to the NRC.

(5) Directors and Officers of any foreign controlled owner shall not be permitted to hold positions, and shall be excluded from holding positions, at Connecticut Yankee Atomic Power Company that would enable them to control the policy and practices of Connecticut Yankee Atomic Power Company in the performance of its licensed activities, and shall not have access to classified information or safeguards information related to the Haddam Neck facility, or access to or custody of special nuclear material related to the Haddam Neck facility.

(6) Connecticut Yankee Atomic Power Company shall cause to be transmitted to the Director, Office of Nuclear Material Safety and Safeguards, within 30 days of knowledge of a filing with the U.S. Securities and Exchange Commission, any Schedules 13D or 13G filed pursuant to the Securities and Exchange Act of 1934 that disclose beneficial ownership of any registered classes of Connecticut Yankee Atomic Power Company stock.

V

In accordance with 10 CFR 2.202, any person adversely affected by this Confirmatory Order, other than the Licensee, may request a hearing within 20 days of the date of this Order. Where good cause is shown, consideration will be given to extending the time to request a hearing. A request for extension of time must be made in writing to the Director, Office of Nuclear Material Safety and Safeguards, U.S. Nuclear Regulatory Commission, Washington, DC 20555, and include a statement of good cause for the extension.

If a person other than the Licensee requests a hearing, that person shall set forth with particularity the manner in which his interest is adversely affected by this Order and shall address the applicable criteria set forth in 10 CFR 2.202 and 2.309.

If a hearing is granted, the Commission will issue an Order designating the time and place of any hearings. If a hearing is held, the issue to be considered at such hearing shall be whether this Order should be sustained.

All documents filed in NRC adjudicatory proceedings, including a request for hearing, a petition for leave to intervene, any motion or other document filed in the proceeding prior to the submission of a request for hearing or petition to intervene, and documents filed by interested governmental entities participating under 10 CFR 2.315(c), must be filed in accordance with the NRC E-Filing rule (72 FR 49139, August 28, 2007). The E-Filing process requires participants to submit and serve all adjudicatory documents over the internet, or in some cases to mail copies on electronic storage media. Participants may not

submit paper copies of their filings unless they seek an exemption in accordance with the procedures described below.

To comply with the procedural requirements of E-Filing, at least 10 days prior to the filing deadline, the participant should contact the Office of the Secretary by email at *hearing.docket@nrc.gov,* or by telephone at (301) 415–1677, to request (1) a digital ID certificate, which allows the participant (or its counsel or representative) to digitally sign documents and access the E-Submittal server for any proceeding in which it is participating; and (2) advise the Secretary that the participant will be submitting a request or petition for hearing (even in instances in which the participant, or its counsel or representative, already holds an NRC-issued digital ID certificate). Based upon this information, the Secretary will establish an electronic docket for the hearing in this proceeding if the Secretary has not already established an electronic docket.

Information about applying for a digital ID certificate is available on NRC's public Web site at *http://www.nrc.gov/site-help/e-submittals/apply-certificates.html.* System requirements for accessing the E-Submittal server are detailed in NRC's ''Guidance for Electronic Submission,'' which is available on the agency's public Web site at *http://www.nrc.gov/site-help/e-submittals.html.* Participants may attempt to use other software not listed on the web site, but should note that the NRC's E-Filing system does not support unlisted software, and the NRC Meta System Help Desk will not be able to offer assistance in using unlisted software.

If a participant is electronically submitting a document to the NRC in accordance with the E-Filing rule, the participant must file the document using the NRC's online, web-based submission form. In order to serve documents through the Electronic Information Exchange, users will be required to install a web browser plug-in from the NRC web site. Further information on the web-based submission form, including the installation of the Web browser plug-in, is available on the NRC's public Web site at *http://www.nrc.gov/site-help/e-submittals.html.*

Once a participant has obtained a digital ID certificate and a docket has been created, the participant can then submit a request for hearing or petition for leave to intervene. Submissions should be in Portable Document Format (PDF) in accordance with NRC guidance available on the NRC public Web site at *http://www.nrc.gov/site-help/e-submittals.html.* A filing is considered complete at the time the documents are submitted through the NRC's E-Filing system. To be timely, an electronic filing must be submitted to the E-Filing system no later than 11:59 p.m. Eastern Time on the due date. Upon receipt of a transmission, the E-Filing system time-stamps the document and sends the submitter an email notice confirming receipt of the document. The E-Filing system also distributes an email notice that provides access to the document to the NRC Office of the General Counsel and any others who have advised the Office of the Secretary that they wish to participate in the proceeding, so that the filer need not serve the documents on those participants separately. Therefore, applicants and other participants (or their counsel or representative) must apply for and receive a digital ID certificate before a hearing request/petition to intervene is filed so that they can obtain access to the document via the E-Filing system.

A person filing electronically using the agency's adjudicatory E-Filing system may seek assistance by contacting the NRC Meta System Help Desk through the ''Contact Us'' link located on the NRC Web site at *http://www.nrc.gov/site-help/e-submittals.html,* by email at *MSHD.Resource@nrc.gov,* or by a toll-free call at (866) 672–7640. The NRC Meta System Help Desk is available between 8 a.m. and 8 p.m., Eastern Time, Monday through Friday, excluding government holidays.

Participants who believe that they have a good cause for not submitting documents electronically must file an exemption request, in accordance with 10 CFR 2.302(g), with their initial paper filing requesting authorization to continue to submit documents in paper format. Such filings must be submitted by: (1) First-class mail addressed to the Office of the Secretary of the Commission, U.S. Nuclear Regulatory Commission, Washington, DC 20555–0001, Attention: Rulemaking and Adjudications Staff; or (2) courier, express mail, or expedited delivery service to the Office of the Secretary, Sixteenth Floor, One White Flint North, 11555 Rockville Pike, Rockville, Maryland, 20852, Attention: Rulemaking and Adjudications Staff. Participants filing a document in this manner are responsible for serving the document on all other participants. Filing is considered complete by first-class mail as of the time of deposit in the mail, or by courier, express mail, or expedited delivery service upon depositing the document with the provider of the service. A presiding officer, having granted an exemption request from using E-Filing, may require a participant or party to use E-Filing if the presiding officer subsequently determines that the reason for granting the exemption from use of E-Filing no longer exists.

Documents submitted in adjudicatory proceedings will appear in NRC's electronic hearing docket, which is available to the public at *http://ehd1.nrc.gov/ehd/,* unless excluded pursuant to an order of the Commission, or the presiding officer. Participants are requested not to include personal privacy information, such as social security numbers, home addresses, or home phone numbers in their filings, unless an NRC regulation or other law requires submission of such information. With respect to copyrighted works, except for limited excerpts that serve the purpose of the adjudicatory filings and would constitute a Fair Use application, participants are requested not to include copyrighted materials in their submission.

A request for hearing shall not stay the immediate effectiveness of this order.

For the Nuclear Regulatory Commission.

Dated: Dated this 4th day of June 2012.

Catherine Haney,

Director, Office of Nuclear Material Safety and Safeguards.

[FR Doc. 2012–14761 Filed 6–15–12; 8:45 am]

BILLING CODE 7590–01–P

NUCLEAR REGULATORY COMMISSION

[Docket Nos. 50–029, 72–31; NRC–2012–0138; License No. DPR–3]

Yankee Atomic Electric Company, Yankee Nuclear Power Station, Confirmatory Order Modifying License (Effective Immediately)

AGENCY: Nuclear Regulatory Commission.

ACTION: The U.S. Nuclear Regulatory Commission (NRC or the Commission) issued a Confirmatory Order to Yankee Atomic Electric Company (Yankee Atomic or the Licensee), to address statutory requirements and the Commission's regulation regarding foreign ownership, control, or domination (FOCD).

FOR FURTHER INFORMATION CONTACT: John Goshen, Project Manager, Division of

Spent Fuel Storage and Transportation, Office of Nuclear Material Safety and Safeguards, U.S. Nuclear Regulatory Commission, Washington, DC 20555. Telephone: (301) 492–3325; Fax number: (301) 492–3342; Email: *john.goshen@nrc.gov.*

I

Yankee Atomic Electric Company (Yankee Atomic or the Licensee), is the holder of Facility Operating License No. DPR–3 pursuant to 10 CFR part 50, which authorizes the receipt, possession, and use of byproduct and special nuclear material in accordance with the Commission's regulations in 10 CFR parts 30, 40, and 70 and storage of spent nuclear fuel under the general license provisions of 10 CFR part 72, Subpart K at the Yankee Nuclear Power Station. The facility is located at the Licensee's site in Rowe, Massachusetts.

II

On December 21, 2011, as supplemented April 24, 2012, Yankee Atomic submitted a letter to the U.S. Nuclear Regulatory Commission (NRC or the Commission) (Agencywide Documents Access and Management System (ADAMS) Accession Nos. ML11364A053 and ML12124A229) stating that it had implemented a Negation Action Plan by adopting a Board of Directors Resolution that prevents any potential for foreign control over safety and security matters, including access to security information and to special nuclear material in compliance with Section 103d of the Atomic Energy Act of 1954, as amended (AEA) and the Commission's regulation under Title 10 of the Code of Federal Regulations (10 CFR) 50.38. The Board of Directors Resolution was passed on December 14, 2011, and formally executed on January 3, 2012. The Board of Directors Resolution was enclosed in a Foreign Ownership, Control, and Influence (FOCI) application filed with the NRC on January 3, 2012, and also provided in a letter to the NRC dated (ADAMS Accession No. ML12066A038).

The Negation Action Plan, as modified, in the April 24, 2012, letter, contains provisions related to foreign ownership, control, or domination that include, but are not limited to, the following items: (1) Access to classified and safeguards information and to special nuclear material shall be controlled by Yankee Atomic under the direction of the President and Chief Executive Officer (CEO) of Yankee Atomic; (2) Decisions related to safety and security of special nuclear material, and related to access to classified and safeguards information and to special nuclear material, are specifically delegated by the Yankee Atomic Board of Directors to the President and CEO of Yankee Atomic; (3) The President and CEO of Yankee Atomic shall be a U.S. citizen and shall execute a certification acknowledging his or her special duties to protect classified and safeguards information, to protect public health and safety and common defense and security relative to special nuclear material, and to report any foreign ownership, control, or domination issue to the NRC; (4) Directors and officers of foreign-controlled sponsor companies shall not have access to safeguards or classified information, and shall not have access to special nuclear material in the possession of Yankee Atomic; (5) Directors and officers of Yankee Atomic who are a representative of a foreign-controlled owner shall be excluded from access to classified information and to special nuclear material; and (6) Directors and officers of Yankee Atomic who are a representative of a foreign-controlled owner shall execute certifications acknowledging their exclusion from access to classified information and special nuclear material, and acknowledging their commitment to take no action to circumvent the protective measures established by Yankee Atomic to negate any foreign control or influence with respect to radiological safety and security of special nuclear material.

The NRC has reviewed and evaluated the executed Negation Action Plan and Board Resolution submitted by Yankee Atomic, and finds that the plan and implementing actions are acceptable to negate the foreign ownership, control, or domination issues and satisfy NRC requirements as applicable when the plan was submitted and at this time.

III

In order to meet statutory requirements of Section 103d of the AEA and 10 CFR 50.38 as discussed above, the Commission has determined that the Facility Operating License for Yankee Nuclear Power Station must be modified to include provisions with respect to the measures identified in Section II of this Confirmatory Order. The requirements needed to effectuate the foregoing are set forth in Section IV below. On May 31, 2012, Yankee Atomic consented to the license modifications set forth in Section IV below. Yankee Atomic further agreed in its letter dated May 31, 2012, that it has waived its right to a hearing on this Confirmatory Order, and, therefore, that the terms of the Confirmatory Order are effective upon issuance.

The NRC has concluded that the License modifications set forth in Section IV are acceptable and necessary to ensure continued compliance with the AEA. Based on the above and Yankee Atomics' consent, this Confirmatory Order is immediately effective upon issuance.

IV

Accordingly, pursuant to Section 103d of the Atomic Energy Act of 1954, as amended, and the Commission's regulations in 10 CFR 2.202, 10 CFR Part 50, and 10 CFR part 72, *it is hereby ordered, effective immediately, that license no. DPR–3 is modified as follows:*

(1) The Yankee Atomic Electric Company Board Negation Action Plan included with the letters dated December 21, 2011, and April 24, 2012, and the Board Resolution included with the FOCI application filed on January 3, 2012, and provided in a letter to the NRC dated February 23, 2012, shall be adhered to and may not be modified in any respect concerning decision-making authority over the Yankee Atomic Independent Spent Fuel Storage Installation without the prior written consent of the Director, Office of Nuclear Material Safety and Safeguards, or designee.

(2) Access to classified and safeguards information and to special nuclear material shall be controlled by Yankee Atomic Electric Company under the direction of the President and CEO of Yankee Atomic Electric Company.

(3) Decisions related to safety and security of special nuclear material, and related to access to classified and safeguards information and to special nuclear material, are specifically delegated by the Yankee Atomic Electric Company Board of Directors to the President and CEO of Yankee Atomic Electric Company.

(4) The President and CEO of Yankee Atomic Electric Company shall be a U.S. citizen and shall execute a certification acknowledging his or her special duties to protect classified and safeguards information, to protect public health and safety and common defense and security relative to special nuclear material, and to report any foreign ownership, control, or domination issue to the NRC.

(5) Directors and Officers of any foreign controlled owner shall not be permitted to hold positions, and shall be excluded from holding positions, at Yankee Atomic Electric Company that would enable them to control the policy and practices of Yankee Atomic Electric Company in the performance of its licensed activities, and shall not have

access to classified information or safeguards information related to the Yankee facility, or access to or custody of special nuclear material related to the Yankee facility.

(6) Yankee Atomic Electric Company shall cause to be transmitted to the Director, Office of Nuclear Material Safety and Safeguards, within 30 days of knowledge of a filing with the U.S. Securities and Exchange Commission, any Schedules 13D or 13G filed pursuant to the Securities and Exchange Act of 1934 that disclose beneficial ownership of any registered classes of Yankee Atomic Electric Company stock.

V

In accordance with 10 CFR 2.202, any person adversely affected by this Confirmatory Order, other than the Licensee, may request a hearing within 20 days of the date of this Order. Where good cause is shown, consideration will be given to extending the time to request a hearing. A request for extension of time must be made in writing to the Director, Office of Nuclear Material Safety and Safeguards, U.S. Nuclear Regulatory Commission, Washington, DC 20555, and include a statement of good cause for the extension.

If a person other than the Licensee requests a hearing, that person shall set forth with particularity the manner in which his interest is adversely affected by this Order and shall address the applicable criteria set forth in 10 CFR 2.202 and 2.309.

If a hearing is granted, the Commission will issue an Order designating the time and place of any hearings. If a hearing is held, the issue to be considered at such hearing shall be whether this Order should be sustained.

All documents filed in NRC adjudicatory proceedings, including a request for hearing, a petition for leave to intervene, any motion or other document filed in the proceeding prior to the submission of a request for hearing or petition to intervene, and documents filed by interested governmental entities participating under 10 CFR 2.315(c), must be filed in accordance with the NRC E-Filing rule (72 FR 49139, August 28, 2007). The E-Filing process requires participants to submit and serve all adjudicatory documents over the Internet, or in some cases to mail copies on electronic storage media. Participants may not submit paper copies of their filings unless they seek an exemption in accordance with the procedures described below.

To comply with the procedural requirements of E-Filing, at least 10 days prior to the filing deadline, the participant should contact the Office of the Secretary by email at *hearing.docket@nrc.gov,* or by telephone at (301) 415–1677, to request (1) a digital ID certificate, which allows the participant (or its counsel or representative) to digitally sign documents and access the E-Submittal server for any proceeding in which it is participating; and (2) advise the Secretary that the participant will be submitting a request or petition for hearing (even in instances in which the participant, or its counsel or representative, already holds an NRC-issued digital ID certificate). Based upon this information, the Secretary will establish an electronic docket for the hearing in this proceeding if the Secretary has not already established an electronic docket.

Information about applying for a digital ID certificate is available on NRC's public Web site at *http://www.nrc.gov/site-help/e-submittals/apply-certificates.html.* System requirements for accessing the E-Submittal server are detailed in NRC's ''Guidance for Electronic Submission,'' which is available on the agency's public Web site at *http://www.nrc.gov/site-help/e-submittals.html.* Participants may attempt to use other software not listed on the Web site, but should note that the NRC's E-Filing system does not support unlisted software, and the NRC Meta System Help Desk will not be able to offer assistance in using unlisted software.

If a participant is electronically submitting a document to the NRC in accordance with the E-Filing rule, the participant must file the document using the NRC's online, web-based submission form. In order to serve documents through the Electronic Information Exchange, users will be required to install a web browser plug-in from the NRC Web site. Further information on the web-based submission form, including the installation of the Web browser plug-in, is available on the NRC's public Web site at *http://www.nrc.gov/site-help/e-submittals.html.*

Once a participant has obtained a digital ID certificate and a docket has been created, the participant can then submit a request for hearing or petition for leave to intervene. Submissions should be in Portable Document Format (PDF) in accordance with NRC guidance available on the NRC public Web site at *http://www.nrc.gov/site-help/e-submittals.html.* A filing is considered complete at the time the documents are submitted through the NRC's E-Filing system. To be timely, an electronic filing must be submitted to the E-Filing system no later than 11:59 p.m. Eastern Time on the due date. Upon receipt of a transmission, the E-Filing system time-stamps the document and sends the submitter an email notice confirming receipt of the document. The E-Filing system also distributes an email notice that provides access to the document to the NRC Office of the General Counsel and any others who have advised the Office of the Secretary that they wish to participate in the proceeding, so that the filer need not serve the documents on those participants separately. Therefore, applicants and other participants (or their counsel or representative) must apply for and receive a digital ID certificate before a hearing request/petition to intervene is filed so that they can obtain access to the document via the E-Filing system.

A person filing electronically using the agency's adjudicatory E-Filing system may seek assistance by contacting the NRC Meta System Help Desk through the ''Contact Us'' link located on the NRC Web site at *http://www.nrc.gov/site-help/e-submittals.html,* by email at *MSHD.Resource@nrc.gov,* or by a toll-free call at (866) 672–7640. The NRC Meta System Help Desk is available between 8 a.m. and 8 p.m., Eastern Time, Monday through Friday, excluding government holidays.

Participants who believe that they have a good cause for not submitting documents electronically must file an exemption request, in accordance with 10 CFR 2.302(g), with their initial paper filing requesting authorization to continue to submit documents in paper format. Such filings must be submitted by: (1) First-class mail addressed to the Office of the Secretary of the Commission, U.S. Nuclear Regulatory Commission, Washington, DC 20555–0001, Attention: Rulemaking and Adjudications Staff; or (2) courier, express mail, or expedited delivery service to the Office of the Secretary, Sixteenth Floor, One White Flint North, 11555 Rockville Pike, Rockville, Maryland 20852, Attention: Rulemaking and Adjudications Staff. Participants filing a document in this manner are responsible for serving the document on all other participants. Filing is considered complete by first-class mail as of the time of deposit in the mail, or by courier, express mail, or expedited delivery service upon depositing the document with the provider of the service. A presiding officer, having granted an exemption request from using E-Filing, may require a participant or party to use E-Filing if the presiding officer subsequently determines that the

reason for granting the exemption from use of E-Filing no longer exists.

Documents submitted in adjudicatory proceedings will appear in NRC's electronic hearing docket, which is available to the public at *http://ehd1.nrc.gov/ehd/,* unless excluded pursuant to an order of the Commission, or the presiding officer. Participants are requested not to include personal privacy information, such as social security numbers, home addresses, or home phone numbers in their filings, unless an NRC regulation or other law requires submission of such information. With respect to copyrighted works, except for limited excerpts that serve the purpose of the adjudicatory filings and would constitute a Fair Use application, participants are requested not to include copyrighted materials in their submission.

A request for hearing shall not stay the immediate effectiveness of this order.

Dated this 4th day of June 2012.

For the Nuclear Regulatory Commission.

Catherine Haney,

Director, Office of Nuclear Material Safety and Safeguards.

[FR Doc. 2012–14762 Filed 6–15–12; 8:45 am]

BILLING CODE 7590–01–P

SECURITIES AND EXCHANGE COMMISSION

[File No. 500–1]

Stream Communications Network & Media, Inc.; Order of Suspension of Trading

June 14, 2012.

It appears to the Securities and Exchange Commission that there is a lack of current and accurate information concerning the securities of Stream Communications Network & Media, Inc. because it has not filed any periodic reports since the period ended December 31, 2008.

The Commission is of the opinion that the public interest and the protection of investors require a suspension of trading in the securities of the above-listed company.

Therefore, it is ordered, pursuant to Section 12(k) of the Securities Exchange Act of 1934, that trading in the security of the above-listed company is suspended for the period from 9:30 a.m. EDT on June 14, 2012, through 11:59 p.m. EDT on June 27, 2012.

By the Commission.

Elizabeth M. Murphy,

Secretary.

[FR Doc. 2012–14860 Filed 6–14–12; 11:15 am]

BILLING CODE 8011–01–P

SECURITIES AND EXCHANGE COMMISSION

[Release No. 34–67178; File No. SR–NYSEArca–2012–60]

Self-Regulatory Organizations; NYSE Arca, Inc.; Notice of Filing and Immediate Effectiveness of a Proposed Rule Change Amending Commentary .07 to NYSE Arca Rule 6.4 Allowing the Exchange To Open Short Term Option Series That Are Opened by Other Securities Exchanges in Option Classes Selected by Other Exchanges Under Their Respective Short Term Option Rules

June 11, 2012.

Pursuant to Section 19(b)(1) of the Securities Exchange Act of 1934 (''Act'') [1] and Rule 19b–4 thereunder,[2] notice is hereby given that, on June 6, 2012, NYSE Arca, Inc. (the ''Exchange'' or ''NYSE Arca'') filed with the Securities and Exchange Commission (''Commission'') the proposed rule change as described in Items I and II below, which Items have been prepared by the Exchange. The Commission is publishing this notice to solicit comments on the proposed rule change from interested persons.

I. Self-Regulatory Organization's Statement of the Terms of Substance of the Proposed Rule Change

The Exchange proposes to amend Commentary .07 to NYSE Arca Rule 6.4 to allow the Exchange to open Short Term Option Series (''Weeklies'') that are opened by other securities exchanges in option classes selected by other exchanges under their respective short term option rules. The text of the proposed rule change is available on the Exchange's Web site at *www.nyse.com,* at the principal office of the Exchange, and at the Commission's Public Reference Room.

II. Self-Regulatory Organization's Statement of the Purpose of, and Statutory Basis for, the Proposed Rule Change

In its filing with the Commission, the self-regulatory organization included statements concerning the purpose of, and basis for, the proposed rule change and discussed any comments it received on the proposed rule change. The text of those statements may be examined at the places specified in Item IV below. The Exchange has prepared summaries, set forth in sections A, B, and C below, of the most significant parts of such statements.

A. Self-Regulatory Organization's Statement of the Purpose of, and Statutory Basis for, the Proposed Rule Change

1. Purpose

The purpose of this proposed rule change is to amend Commentary .07 to NYSE Arca Rule 6.4 to allow the Exchange to open Short Term Option Series (''Weeklies'') that are opened by other securities exchanges in option classes selected by other exchanges under their respective short term option rules.[3]

Currently, the Exchange may select up to 5 currently listed option classes on which Weeklies options may be opened in the Weeklies Program and the Exchange may also match any option classes that are selected by other securities exchanges that employ a similar program under their respective rules. For each option class eligible for participation in the Weeklies Program, the Exchange may open up to 30 Short Term Option Series for each expiration date in that class.

This proposal seeks to allow the Exchange to open Weeklies option series that are opened by other securities exchanges in option classes selected by other exchanges under their respective short term option rules. This change is being proposed notwithstanding the current cap of 30 series per class under the Weeklies Program. This is a competitive filing and is based on existing rules of The NASDAQ Stock Market LLC for the NASDAQ Options Market (''NOM'') and NASDAQ OMX PHLX, Inc. (''PHLX'') and Chicago Board Options Exchange, Incorporated (''CBOE'').[4]

NYSE Arca is competitively disadvantaged since it operates a substantially similar Weeklies Program as NOM, PHLX and CBOE but is limited to listing a maximum of 30 series per

[1] 15 U.S.C. 78s(b)(1).

[2] 17 CFR 240.19b–4.

[3] On July 12, 2005, the Commission approved the Weeklies Program on a pilot basis. *See* Securities Exchange Act Release No. 52013 (July 12, 2005), 70 FR 41471 (July 19, 2005) (SR–PCX–2005–32). The Weeklies Program was made permanent on June 23, 2010. *See* Securities Exchange Act Release No. 62369 (June 23, 2010), 75 FR 37868 (June 30, 2010) (SR–NYSEArca–2010–59).

[4] *See* Securities Exchange Act Release Nos. 65775 (November 17, 2011), 76 FR 72473 (November 23, 2011) (SR–NASDAQ–2011–138) ; 65776 (November 17, 2011), 76 FR 72482 (November 23, 2011) (SR–PHLX–2011–131); and 66563 (March 9, 2012), 77 FR 15426 (March 15, 2012).

options class that participates in its Weeklies Program (whereas PHLX, NOM and CBOE are not similarly restricted).

The Exchange is not proposing any changes to the Weeklies Program other than the ability to open Weeklies option series that are opened by other securities exchanges in option classes selected by other exchanges under their respective short term option rules.

The Exchange notes that the Weeklies Program has been well-received by market participants, in particular by retail investors. The Exchange believes that the current proposed revision to the Weeklies Program will permit the Exchange to meet increased customer demand and provide market participants with the ability to hedge in a greater number of option classes and series.

With regard to the impact of this proposal on system capacity, the Exchange has analyzed its capacity and represents that it and the Options Price Reporting Authority (''OPRA'') have the necessary systems capacity to handle the potential additional traffic associated with trading of an expanded number of series for the classes that participate in the Weeklies Program.

The proposed increase to the number of series per classes eligible to participate in the Weeklies Program is required for competitive purposes as well as to ensure consistency and uniformity among the competing options exchanges that have adopted similar Weeklies Programs.

2. Statutory Basis

The proposed rule change is consistent with Section 6(b) of the Securities Exchange Act of 1934 (the ''Act''),[5] in general, and furthers the objectives of Section 6(b)(5),[6] in particular, in that it is designed to prevent fraudulent and manipulative acts and practices, to promote just and equitable principles of trade, to foster cooperation and coordination with persons engaged in facilitating transactions in securities, and to remove impediments to and perfect the mechanism of a free and open market and a national market system. The Exchange believes that expanding the Weeklies Program will result in a continuing benefit to investors by giving them more flexibility to closely tailor their investment decisions and hedging decisions in a greater number of securities. The Exchange also believes that expanding the Weeklies Program will provide the investing public and other market participants with additional opportunities to hedge their investment thus allowing these investors to better manage their risk exposure. While the expansion of the Weeklies Program will generate additional quote traffic, the Exchange does not believe that this increased traffic will become unmanageable since the proposal remains limited to a fixed number of classes.

B. Self-Regulatory Organization's Statement on Burden on Competition

The Exchange does not believe that the proposed rule change will impose any burden on competition that is not necessary or appropriate in furtherance of the purposes of the Act.

C. Self-Regulatory Organization's Statement on Comments on the Proposed Rule Change Received From Members, Participants, or Others

No written comments were solicited or received with respect to the proposed rule change.

III. Date of Effectiveness of the Proposed Rule Change and Timing for Commission Action

Because the foregoing proposed rule change does not significantly affect the protection of investors or the public interest, does not impose any significant burden on competition, and, by its terms, does not become operative for 30 days from the date on which it was filed, or such shorter time as the Commission may designate, it has become effective pursuant to Section 19(b)(3)(A) of the Act[7] and Rule 19b–4(f)(6) thereunder.[8]

The Exchange has requested that the Commission waive the 30-day operative delay. The Commission believes that waiver of the operative delay is consistent with the protection of investors and the public interest because the proposal is substantially similar to those of other exchanges that have been approved by the Commission and permit such exchanges to open Weekly option series that are opened by other securities exchanges under their respective short term option rules.[9] Therefore, the Commission designates the proposal operative upon filing.[10]

At any time within 60 days of the filing of the proposed rule change, the Commission summarily may temporarily suspend such rule change if it appears to the Commission that such action is necessary or appropriate in the public interest, for the protection of investors, or otherwise in furtherance of the purposes of the Act.

IV. Solicitation of Comments

Interested persons are invited to submit written data, views, and arguments concerning the foregoing, including whether the proposed rule change is consistent with the Act. Comments may be submitted by any of the following methods:

Electronic Comments

- Use the Commission's Internet comment form (*http://www.sec.gov/rules/sro.shtml);* or
- Send an email to *rule-comments@sec.gov.* Please include File Number SR–NYSEArca–2012–60 on the subject line.

Paper Comments

- Send paper comments in triplicate to Elizabeth M. Murphy, Secretary, Securities and Exchange Commission, 100 F Street NE., Washington, DC 20549–1090.

All submissions should refer to File Number SR–NYSEArca–2012–60. This file number should be included on the subject line if email is used. To help the Commission process and review your comments more efficiently, please use only one method. The Commission will post all comments on the Commission's Internet Web site (*http://www.sec.gov/rules/sro.shtml).* Copies of the submission, all subsequent amendments, all written statements with respect to the proposed rule change that are filed with the Commission, and all written communications relating to the proposed rule change between the Commission and any person, other than those that may be withheld from the public in accordance with the provisions of 5 U.S.C. 552, will be available for Web site viewing and printing in the Commission's Public Reference Room, 100 F Street NE., Washington, DC 20549, on official business days between the hours of 10:00 a.m. and 3:00 p.m. Copies of the filing also will be available for

[5] 15 U.S.C. 78f(b).

[6] 15 U.S.C. 78f(b)(5).

[7] 15 U.S.C. 78s(b)(3)(A).

[8] 17 CFR 240.19b–4(f)(6). In addition, Rule 19b–4(f)(6)(iii) requires the Exchange to give the Commission written notice of the Exchange's intent to file the proposed rule change, along with a brief description and text of the proposed rule change, at least five business days prior to the date of filing of the proposed rule change, or such shorter time as designated by the Commission. The Exchange has satisfied this requirement.

[9] *See supra* note 4.

[10] For purposes only of waiving the 30-day operative delay, the Commission has considered the proposed rule's impact on efficiency, competition, and capital formation. *See* 15 U.S.C. 78c(f).

inspection and copying at the principal office of the Exchange. All comments received will be posted without change; the Commission does not edit personal identifying information from submissions. You should submit only information that you wish to make available publicly. All submissions should refer to File Number SR–NYSEArca–2012–60 and should be submitted on or before July 9, 2012.

For the Commission, by the Division of Trading and Markets, pursuant to delegated authority.[11]

Kevin M. O'Neill,

Deputy Secretary.

[FR Doc. 2012–14739 Filed 6–15–12; 8:45 am]

BILLING CODE 8011–01–P

[11] 17 CFR 200.30–3(a)(12).

SECURITIES AND EXCHANGE COMMISSION

[Release No. 34–67186; File No. SR–NYSEArca–2012–59]

Self-Regulatory Organizations; NYSE Arca, Inc.; Notice of Filing of Proposed Rule Change Amending Independence Policy of the Board of Directors of NYSE Euronext and Creating New Independence Policy for Boards of Directors of the New York Stock Exchange LLC, NYSE MKT LLC, NYSE Regulation, Inc. and NYSE Market, Inc.

June 12, 2012.

Pursuant to Section 19(b)(1) of the Securities Exchange Act of 1934 (''Act'')[1] and Rule 19b–4 thereunder,[2] notice is hereby given that on June 8, 2012, NYSE Arca, Inc. (''NYSE Arca'') filed with the Securities and Exchange Commission (''Commission'') the proposed rule change as described in Items I and II below, which Items have been prepared by NYSE Arca. The Commission is publishing this notice to solicit comments on the proposed rule change from interested persons.

I. Self-Regulatory Organization's Statement of the Terms of Substance of the Proposed Rule Change

NYSE Arca proposes to amend the Independence Policy of the Board of Directors of NYSE Euronext (the ''NYSE Euronext Director Independence Policy'') and create a new independence policy (the ''Subsidiary Director Independence Policy'') for the boards of directors of NYSE MKT LLC (''NYSE MKT''), New York Stock Exchange LLC (''the Exchange''), NYSE Market, Inc. (''NYSE Market'') and NYSE Regulation, Inc. (''NYSE Regulation'' and, together, the ''Regulated Subsidiaries'').[3] In addition, NYSE MKT proposes to amend the Amended and Restated Bylaws of NYSE Euronext, the Amended and Restated Bylaws of NYSE Market, Inc., Third Amended and Restated Bylaws of NYSE Regulation, Inc., the Third Amended and Restated Operating Agreement of New York Stock Exchange LLC and the Second Amended and Restated Operating Agreement of NYSE MKT LLC (collectively the ''Organizational Documents'') to make certain conforming changes described below. The text of the proposed rule change is available on the Exchange's Web site at *www.nyse.com,* at the principal office of the Exchange, and at the Commission's Public Reference Room.

[1] 15 U.S.C. 78s(b)(1).

[2] 17 CFR 240.19b–4.

[3] The Exchange and NYSE MKT are filing substantially the same proposed rule change.

II. Self-Regulatory Organization's Statement of the Purpose of, and Statutory Basis for, the Proposed Rule Change

In its filing with the Commission, NYSE Arca included statements concerning the purpose of, and basis for, the proposed rule change and discussed any comments it received on the proposed rule change. The text of those statements may be examined at the places specified in Item IV below. NYSE Arca has prepared summaries, set forth in sections A, B and C below, of the most significant parts of such statements.

A. Self-Regulatory Organization's Statement of the Purpose of, and Statutory Basis for, the Proposed Rule Change

1. Purpose

The purpose of this rule filing is to amend the NYSE Euronext Director Independence Policy, create the Subsidiary Director Independence Policy for the boards of directors of the Regulated Subsidiaries, and make certain conforming changes to the Organizational Documents, as set forth below.

NYSE Euronext Director Independence Policy

Under the Proposed Rule Change, the NYSE Euronext Director Independence Policy would be amended to reflect the following changes (the ''Proposed Amendments''):

(i) A majority (as opposed to 75%) of the board of directors of NYSE Euronext (the ''Board'') would be required to be independent;

(ii) Executive officers of listed companies would no longer be prohibited from being considered independent for purposes of the Board;

(iii) The ''additional independence requirements'' at the end of the current NYSE Euronext Director Independence Policy—which provide that executive officers of foreign private issuers, executive officers of NYSE Euronext and directors of affiliates of member organizations must together comprise no more than a minority of the total Board—would be eliminated;

(iv) References to certain European regulatory authorities would be updated, because their names have changed;

(v) References to NYSE Alternext US LLC and NYSE Amex LLC would refer instead to NYSE MKT LLC, because of this entity's previous name changes; and

(vi) Footnote 2 would be deleted because the NYSE Euronext Director Independence Policy would not be applicable to the Regulated Subsidiaries, each of which is proposed to have its own director independence policy.

The Commission previously considered and approved these aspects of the director independence policy in connection with the previously proposed combination of NYSE Euronext and Deutsche Börse AG (the ''Combination'').[4] Under the rule change approved in connection with the Combination, Alpha Beta Netherlands Holding N.V. (''Holdco'')—which was the holding company formed in connection with the Combination that would have become the parent company of NYSE Euronext—would have adopted a director independence policy that was substantially similar to the current NYSE Euronext Director Independence Policy, except for the Proposed Amendments noted above and except for certain references to the independence standards and criteria in the Dutch Corporate Governance Code that would be added, given that Holdco was formed under and subject to the laws of the Netherlands. Upon consummation of the Combination, the NYSE Euronext Director Independence Policy would have ceased to apply. On February 2, 2012, following the European Commission's decision to prohibit the Combination, NYSE Euronext and Deutsche Börse agreed to terminate the agreement to combine their businesses.

NYSE Arca explained the reasons for incorporating the Proposed Amendments in Holdco's director

[4] *See* Securities Exchange Act Release No. 34–66171 (January 17, 2012) File Nos. SR–EDGA–2011–34; SR–EDGX–2011–33; SR–ISE–2011–69; SR–NYSE–2011–51; SR–NYSEAmex–2011–78; SR–NYSEArca–2011–72), 77 FR 3297.

independence policy and believes the rationale for making these amendments is substantially applicable with equal force to the NYSE Euronext Director Independence Policy.

Summarized below are the principal reasons for the Proposed Amendments listed in items (i), (ii) and (iii) above. NYSE Arca believes that the Proposed Amendments listed in items (iv), (v) and (vi) above are self-explanatory and technical in nature.

Majority Independence Requirement

NYSE Arca believes that a majority independence standard is appropriate to ensure that the Board as a whole consists of individuals with independent, objective perspectives, while at the same time affording NYSE Euronext sufficient flexibility to include persons with expertise and qualifications that will contribute meaningfully to the Board's performance of its oversight function. The importance of allowing highly qualified individuals to serve on the Board is underscored by the fact that NYSE Euronext serves as the holding company for a complex, global business with highly specialized operations and regulatory functions.

Although NYSE Euronext has unique responsibilities and functions as the holding company for several regulated subsidiaries, it is subject to various corporate governance and regulatory obligations that are addressed by means of ownership and voting limitations on its shareholders, commitments to provide access to its books and records and to submit to the jurisdiction of the Commission, director qualification requirements and other undertakings.

NYSE Arca submits that some of these undertakings call for in-depth industry knowledge and expertise on the Board, such as the requirement that NYSE Euronext directors take into consideration the effect that NYSE Euronext's actions would have on the ability of its U.S. regulated subsidiaries to (i) foster cooperation and coordination with persons engaging in regulating, clearing, settling and processing information with respect to, and facilitating transactions in securities, and (ii) remove impediments to and perfect the mechanisms of a free and open market in securities and a U.S. national securities market system.

Executives of Listed Companies

NYSE Arca believes that a per se disqualification of listed company executives from being deemed independent should not be applicable to NYSE Euronext. The per se disqualification was initially adopted by the New York Stock Exchange, Inc. in early 2005 in the context of its unique circumstances and history and its management structure and board composition at that time.[5] NYSE Arca submits that those circumstances are no longer applicable, and the disqualification of listed company executives tends to undermine rather than facilitate NYSE Euronext's efforts to ensure a qualified and balanced board composition and promote various other important corporate governance objectives, such as ensuring appropriate expertise and experience on the Board, as well as representation of the interests of a diverse range of market constituencies and local European and U.S. interests. A per se disqualification narrows the pool of potential NYSE Euronext director candidates and arbitrarily eliminates from consideration a large number of highly qualified, experienced individuals who have proven track records as business leaders. Under the NYSE Euronext Director Independence Policy, the Board would still need to assess whether a listed company executive meets the various independence criteria, including whether he or she has any ''material relationship'' with NYSE Euronext and its subsidiaries.

Furthermore, NYSE Arca believes that the objectivity of Board members is adequately protected by the various other independence criteria in the NYSE Euronext Director Independence Policy, such as the requirement that independent directors may not be or have been within the last year, and may not have an immediate family member who is or within the last year was, a member of NYSE Arca, the Exchange or NYSE MKT. In addition, if and to the extent that a matter concerning a listed company whose executive is a NYSE Euronext director were ever to come before the Board for consideration, such director would be required to be recused from acting on such matter pursuant to the Board's conflicts of interest policy.

Additional Independence Requirements

Finally, the NYSE Euronext Director Independence Policy provides that the sum of (i) executive officers of foreign private issuers, (ii) executive officers of NYSE Euronext and (iii) directors of affiliates of ''members'' (as defined in Sections 3(a)(A)(3)(ii), 3(a)(A)(3)(iii) and 3(a)(A)(3)(iv) of the Exchange Act[6]) of NYSE Arca, the Exchange or NYSE MKT, may not constitute more than a minority of the total number of directors of NYSE Euronext. The purpose of this requirement is to ensure that, although executives of listed companies who are foreign private issuers are not disqualified from serving on the Board, such executives may not, together with NYSE Euronext executives and directors of affiliates of members, constitute more than a minority of the Board. In light of NYSE Arca's proposal to eliminate the disqualification of listed company executives from the NYSE Euronext Director Independence Policy, this requirement would serve no purpose because the exception to such disqualification for foreign private issuer executives would also be eliminated. NYSE Arca further notes that under the proposed NYSE Euronext Director Independence Policy, executives of NYSE Euronext and directors of affiliates of exchange members would not be deemed independent and, accordingly, could not in any event constitute more than a minority of the Board.

Subsidiary Director Independence Policy

Currently, the independent directors of the Regulated Subsidiaries must satisfy the requirements of the NYSE Euronext Director Independence Policy. Under the Proposed Rule Change, each of the Regulated Subsidiaries would have its own independence policy in the form of the Subsidiary Director Independence Policy attached as Exhibit 5B to the Proposed Rule Change, in lieu of the NYSE Euronext Director Independence Policy.

The Commission previously considered and approved this form of Subsidiary Director Independence Policy to be adopted by the Regulated Subsidiaries in connection with the previously proposed Combination (except that the prior form contained certain references to Holdco that have been replaced in Exhibit 5B with references to NYSE Euronext). NYSE Arca explained the reasons for creating the Subsidiary Director Independence Policy to determine the independence of directors of the Regulated Subsidiaries, and believes these reasons (as set forth below) continue to be applicable.

The Subsidiary Director Independence Policy is substantially similar to the current NYSE Euronext Director Independence Policy, except for the following changes:

(i) References to NYSE Euronext would refer instead to the relevant Regulated Subsidiary;

(ii) The requirement that at least three-fourths of the directors must be independent would be deleted, since

[5] *See* Securities Exchange Act Release No. 34–51217 (February 16, 2005) (File No. SR–NYSE–2004–54), 70 FR 9688.

[6] 15 U.S.C. 78c.

the organizational documents of the Regulated Subsidiaries contain the independence and other qualification requirements for directors;

(iii) The requirement in the NYSE Euronext Director Independence Policy that the board consider the special responsibilities of a director in light of NYSE Euronext's ownership of U.S. regulated subsidiaries and European regulated entities would be deleted, because unlike NYSE Euronext, the Regulated Subsidiaries are not holding companies;

(iv) The requirement for directors to inform the Chairman of the Nominating and Governance Committee of certain relationships and interests would be deleted, since the boards of the Regulated Subsidiaries do not have a Nominating and Governance Committee, except that in the Subsidiary Director Independence Policy to be adopted by NYSE Regulation, this provision would reference the Nominating and Governance Committee of NYSE Regulation;

(v) References to NYSE Alternext US LLC and NYSE Amex LLC would refer instead to NYSE MKT LLC, because of this entity's previous name changes;

(vi) Because the NYSE Euronext Director Independence Policy provides that a director of an affiliate of a ''Member Organization'' cannot qualify as an independent director of these Regulated Subsidiaries, the conflicting language stating that a director of an affiliate of a ''Member Organization'' shall not per se fail to be independent would be deleted;

(vii) Because language in the NYSE Euronext Director Independence Policy provides that an executive officer of an issuer whose securities are listed on a NYSE Exchange cannot qualify as an independent director of these Regulated Subsidiaries, the conflicting language providing an exception applicable only to NYSE Euronext directors would be deleted; and

(viii) The ''additional independence requirements'' at the end of the current Independence Policy of NYSE Euronext, which provides that executive officers of foreign private issuers, executive officers of NYSE Euronext and directors of affiliates of member organizations must together comprise no more than a minority of the total board, would be eliminated. This provision is designed to ensure that although persons who are directors of an affiliate of a Member Organization or who are executive officers of a ''foreign private issuer'' listed on a NYSE Exchange may in some circumstances qualify as independent for purposes of NYSE Euronext board membership, such persons may not, together with executive officers of NYSE Euronext, constitute more than a minority of the total NYSE Euronext directors. Under the proposed Subsidiary Director Independence Policy, such persons could not be deemed to be independent directors of the relevant Regulated Subsidiary and, accordingly, this limitation on the number of such persons who may serve on the board is unnecessary.

NYSE Arca believes that adopting a separate director independence policy for the Regulated Subsidiaries that is more tailored to their specific requirements—rather than applying the NYSE Euronext Director Independence Policy with various carve-outs and exceptions noted therein for the Regulated Subsidiaries—will add clarity to NYSE Arca's rules.

Proposed Conforming Modifications to Organizational Documents

The Organizational Documents would be modified to reflect the changes indicated in Exhibits 5C through 5G, which are summarized as follows:

(i) References in the Amended and Restated Bylaws of NYSE Market, Inc., the Third Amended and Restated Bylaws of NYSE Regulation, Inc., the Third Amended and Restated Operating Agreement of New York Stock Exchange LLC and the Second Amended and Restated Operating Agreement of NYSE MKT LLC would be modified to refer to the applicable Subsidiary Director Independence Policy rather than to the NYSE Euronext Director Independence Policy;

(ii) References to NYSE Alternext US LLC and NYSE Amex LLC in such Organizational Documents would be amended to refer instead to NYSE MKT LLC, because of this entity's previous name changes; and

(iii) Section 3.4 of the Amended and Restated Bylaws of NYSE Euronext would be modified to provide that a majority (rather than three-fourths) of the Board members would be required to be independent.

2. Statutory Basis

NYSE Euronext believes that this filing is consistent with Section 6(b) [7] of the Exchange Act in general, and furthers the objectives of Section 6(b)(1) [8] in particular, in that it enables NYSE Arca to be so organized as to have the capacity to be able to carry out the purposes of the Exchange Act and to comply with the provisions of the Exchange Act, the rules and regulations thereunder, and the rules of NYSE Arca. The Proposed Rule Change will help to ensure that the boards of directors of NYSE Euronext and the Regulated Subsidiaries consist of individuals with independent, objective perspectives, while at the same time affording them sufficient flexibility to include persons with expertise and qualifications that will contribute meaningfully to these boards' performance of their oversight and other functions. For example, some responsibilities of these boards call for in-depth industry knowledge and expertise on the Board, such as the requirement that NYSE Euronext directors take into consideration the effect that NYSE Euronext's actions would have on the ability of its U.S. regulated subsidiaries to (i) foster cooperation and coordination with persons engaging in regulating, clearing, settling and processing information with respect to, and facilitating transactions in securities, and (ii) remove impediments to and perfect the mechanisms of a free and open market in securities and a U.S. national securities market system. NYSE Arca also believes that adopting a separate director independence policy for the Regulated Subsidiaries that is more tailored to their specific requirements—rather than applying the NYSE Euronext Director Independence Policy with various carve-outs and exceptions noted therein for the Regulated Subsidiaries—will add clarity to NYSE Arca's rules.

B. Self-Regulatory Organization's Statement on Burden on Competition

NYSE Arca does not believe that the Proposed Rule Change will impose any burden on competition that is not necessary or appropriate in furtherance of the purposes of the Exchange Act.

C. Self-Regulatory Organization's Statement on Comments on the Proposed Rule Change Received From Members, Participants, or Others

NYSE Arca has neither solicited nor received written comments on the Proposed Rule Change.

III. Date of Effectiveness of the Proposed Rule Change and Timing for Commission Action

Within 45 days of the date of publication of this notice in the **Federal Register** or within such longer period (i) as the Commission may designate up to 90 days of such date if it finds such longer period to be appropriate and publishes its reasons for so finding or (ii) as to which the self-regulatory organization consents, the Commission will:

[7] 15 U.S.C. 78(f)(b).

[8] 15 U.S.C. 78(f)(b)(1).

A. By order approve or disapprove such proposed rule change; or

B. Institute proceedings to determine whether the proposed rule change should be disapproved.

IV. Solicitation of Comments

Interested persons are invited to submit written data, views, and arguments concerning the foregoing, including whether the proposed rule change is consistent with the Act. Comments may be submitted by any of the following methods:

Electronic Comments

- Use the Commission's Internet comment form (*http://www.sec.gov/rules/sro.shtml*); or
- Send an email to *rule-comments@sec.gov.* Please include File Number SR–NYSEArca–2012–59 on the subject line.

Paper Comments

- Send paper comments in triplicate to Elizabeth M. Murphy, Secretary, Securities and Exchange Commission, 100 F Street NE., Washington, DC 20549–1090.

All submissions should refer to File Number SR–NYSEArca–2012–59. This file number should be included on the subject line if email is used. To help the Commission process and review your comments more efficiently, please use only one method. The Commission will post all comments on the Commission's Internet Web site (*http://www.sec.gov/rules/sro.shtml*). Copies of the submission, all subsequent amendments, all written statements with respect to the proposed rule change that are filed with the Commission, and all written communications relating to the proposed rule change between the Commission and any person, other than those that may be withheld from the public in accordance with the provisions of 5 U.S.C. 552, will be available for Web site viewing and printing in the Commission's Public Reference Room, 100 F Street NE., Washington, DC 20549, on official business days between the hours of 10:00 a.m. and 3:00 p.m. Copies of the filing also will be available for inspection and copying at the principal office of the NYSE Arca. All comments received will be posted without change; the Commission does not edit personal identifying information from submissions. You should submit only information that you wish to make available publicly. All submissions should refer to File Number SR–NYSEArca–2012–59 and should be submitted on or before July 9, 2012.

For the Commission, by the Division of Trading and Markets, pursuant to delegated authority.[9]

Kevin M. O'Neill,

Deputy Secretary.

[FR Doc. 2012–14758 Filed 6–15–12; 8:45 am]

BILLING CODE 8011–01–P

SECURITIES AND EXCHANGE COMMISSION

[Release No. 34–67189; File No. SR–Phlx–2012–77]

Self-Regulatory Organizations; NASDAQ OMX PHLX LLC; Notice of Filing and Immediate Effectiveness of Proposed Rule Change Relating to Market Participant Categories, Rebates and Fees for Adding and Removing Liquidity in Select Symbols and Multiply Listed Options

June 12, 2012.

Pursuant to Section 19(b)(1) of the Securities Exchange Act of 1934 (''Act''),[1] and Rule 19b–4 [2] thereunder, notice is hereby given that, on May 31, 2012, NASDAQ OMX PHLX LLC (''Phlx'' or ''Exchange'') filed with the Securities and Exchange Commission (''SEC'' or ''Commission'') the proposed rule change as described in Items I, II and III below, which Items have been prepared by the Exchange. The Commission is publishing this notice to solicit comments on the proposed rule change from interested persons.

I. Self-Regulatory Organization's Statement of the Terms of Substance of the Proposed Rule Change

The Exchange proposes to: (i) Amend certain definitions in the Preface Section, including certain categories of market participants; (ii) delete the Directed Participant category in Section I of the Pricing Schedule and add a Specialist category in Sections I, II and III; (iii) amend the title of Section II fees to ''Multiply Listed Options'' and amend Firm fees; and (iv) make other technical modifications to the Pricing Schedule.

While the changes proposed herein are effective upon filing, the Exchange has designated these changes to be operative on June 1, 2012.

The text of the proposed rule change is available on the Exchange's Web site at *http://www.nasdaqtrader.com/micro.aspx?id=PHLXfilings,* at the principal office of the Exchange, and at the Commission's Public Reference Room.

[9] 17 CFR 200.30–3(a)(12).

[1] 15 U.S.C. 78s(b)(1).

[2] 17 CFR 240.19b–4.

II. Self-Regulatory Organization's Statement of the Purpose of, and Statutory Basis for, the Proposed Rule Change

In its filing with the Commission, the Exchange included statements concerning the purpose of and basis for the proposed rule change and discussed any comments it received on the proposed rule change. The text of these statements may be examined at the places specified in Item IV below. The Exchange has prepared summaries, set forth in sections A, B, and C below, of the most significant aspects of such statements.

A. Self-Regulatory Organization's Statement of the Purpose of, and Statutory Basis for, the Proposed Rule Change

1. Purpose

The Exchange proposes to amend the Pricing Schedule, specifically the Preface, Section I, entitled ''Rebates and Fees for Adding and Removing Liquidity in Select Symbols'' and Section II, entitled ''Equity Options Fees.'' [3] The Exchange also proposes to make other conforming and technical amendments to other sections of the Pricing Schedule. The Exchange will describe the purpose of each amendment to the Pricing Schedule in greater detail below.

Preface and Market Participant Categories

The Exchange is proposing to amend its categories of market participants to specifically define a Specialist [4] separate and apart from other Market Makers. Today, the Exchange defines a Market Maker in the Preface to the Pricing Schedule to include Specialists and Registered Options Traders.[5] The Exchange is proposing to redefine a Market Maker to include ROTs, SQTs and RSQTs. The Exchange will eliminate the category ''Directed Participant'' [6] from the categories of

[3] Equity options fees include options overlying equities, ETFs, ETNs, indexes and HOLDRS which are Multiply Listed, except SOX, HGX and OSX.

[4] A Specialist is an Exchange member who is registered as an options specialist pursuant to Rule 1020(a).

[5] A Registered Options Trader (''ROT'') includes a Streaming Quote Trader (''SQT''), a Remote Streaming Quote Trader (''RSQT'') and a Non-SQT, which by definition is neither a SQT or a RSQT. A ROT is defined in Exchange Rule 1014(b) as a regular member of the Exchange located on the trading floor who has received permission from the Exchange to trade in options for his own account. *See* Exchange Rule 1014 (b)(i) and (ii).

[6] The term ''Directed Participant'' applies to transactions for the account of a Specialist, Streaming Quote Trader or Remote Streaming Quote Trader resulting from a Customer order that is (1)

market participants, and instead include a Specialist as a category of market participant. The Exchange would therefore define its pricing in terms of the following categories of market participants: Customers, Specialists, Market Makers, Firms, Broker-Dealers and Professionals.[7]

The Exchange is proposing to amend the Preface to remove the definition of ''Directed Participant'' and redefine the term ''Market Maker'' to exclude a Specialist. A ''Specialist'' would be separately defined in the Preface. Sections I, II and III would replace the ''Directed Participant'' category with a ''Specialist'' category and also add ''Specialist'' throughout the text of the Pricing Schedule and remove ''Directed Participant.''[8]

The Exchange believes that the proposed changes to the market participant categories will provide additional clarity to the Exchange's Pricing Schedule by creating categories of market participants which exist on other exchanges.

Section I—Rebates and Fees for Adding and Removing Liquidity in Select Symbols

The Exchange proposes to amend the categories of market participants, as specified herein, by amending the pricing tables in Parts A and B of Section I. The Exchange is proposing to amend the Fees for Removing Liquidity in Part A of Section I of the Pricing Schedule, applicable to Single contra-side orders in Select Symbols, to assess the same $0.38 per contract Fee for Removing Liquidity to a Specialist and Market Maker for Single contra-side orders. Today, a Specialist is assessed the $0.38 per contract Fee for Removing Liquidity when transacting a Single contra-side order.

Also, the Exchange is proposing to amend the Fees for Removing Liquidity in Part B of Section I of the Pricing Schedule, applicable to Complex Orders in Select Symbols, to assess the same $0.36 per contract Fee for Removing Liquidity to a Specialist and Market Maker for Complex Orders. Today, a Specialist is assessed the $0.36 per contract Fee for Removing Liquidity when transacting a Complex Order.[9]

The Exchange is proposing to delete the Directed Participant categories in both Parts A and B of Section I from the pricing table. For Single contra-side orders (Part A) the Exchange would delete the $0.23 per contract Rebate for Adding Liquidity along with the $0.36 per contract Fee for Removing Liquidity. For Complex Orders (Part B) the Exchange would delete the $0.10 per contract Fee for Adding Liquidity along with the $0.34 per contract Fee for Removing Liquidity. The Exchange proposes to add a notation within the Pricing Schedule, as opposed to within the pricing tables in Parts A and B, to specify that a Specialist or Market Maker that transacts against a Customer Order directed to it for execution[10] will receive a $0.02 per contract reduction of the Fees for Removing Liquidity. This notation represents the current Fees for Removing Liquidity that the Exchange assesses to Directed Participants ($0.36 per contract Fee for Removing Liquidity for Single contra-side orders and $0.34 Fee for Removing Liquidity for Complex Orders) in Select Symbols. A Specialist or Market Maker receiving a directed order (today a Directed Participant) transacting a Single contra-side order would continue to receive a $0.23 per contact Rebate for Adding Liquidity. Also, a Specialist or Market Maker receiving a directed order (today a Directed Participant) transacting a Complex Order would continue to be assessed a $0.10 per contract Fee for Adding Liquidity. Despite the fact that the Directed Participant category is being removed from the pricing table as a category, Specialists and Market Makers would continue to be assessed the same pricing as today.

The Exchange believes that noting the fees for Market Makers and Specialists who receive directed orders with a notation under the pricing table is similar to the manner in which other Exchanges display similar fees.[11]

Section II—Equity Options Fees

First, the Exchange proposes to amend the title of Section II of the Pricing Schedule from ''Equity Options Fees'' to ''Multiply Listed Options Fees''[12] to more specifically define the pricing in this section. The Exchange proposes to make the necessary amendments throughout the Pricing Schedule to amend the title of Section II as proposed herein.[13]

Second, the Exchange proposes to amend the Firm electronic fees for both Penny Pilot and non-Penny Pilot Options as well as a current fee discount applicable to Firms. The Exchange proposes to increase the Penny Pilot Firm electronic Options Transaction Charge from $.25 to $.40 per contract and also increase the non-Penny Pilot Firm electronic Options Transaction Charge from $.40 to $.45 per contract.

Today, the Exchange provides a Firm fee discount for Firm electronic Options Transaction Charges in Penny Pilot[14] and non-Penny Pilot Options. The Exchange provides that Firm electronic Options Transaction Charges in Penny Pilot and non-Penny Pilot Options will be reduced to $0.11 per contract for a given month provided the Firm has volume greater than 750,000 electronically-delivered contracts in a month. The Exchange proposes to define this discount as the ''Electronic Firm Fee Discount'' and further qualify the discount to apply per member organization when such members are trading in their own proprietary account. The Exchange's Monthly Firm Fee Cap is similarly applicable when

directed to it by an order flow provider, and (2) executed by it electronically on Phlx XL II.

[7] The term ''professional'' means any person or entity that (i) is not a broker or dealer in securities, and (ii) places more than 390 orders in listed options per day on average during a calendar month for its own beneficial account(s). *See* Rule 1000(b)(14).

[8] The Exchange will make conforming amendments to Sections I, II and III of the Pricing Schedule.

[9] Today a Specialist falls into the Market Maker category and pays a Complex Order Fee for Removing Liquidity in Select Symbols of $0.38 per contract and a Fee for Removing Liquidity in Select Symbols in Complex Orders of $0.36.

[10] Today a Specialist or Market Maker transacting a Customer Order directed to that Specialist or Market Maker for execution is termed a ''Directed Participant'' and subject to that pricing.

[11] *See* the International Securities Exchange, LLC's (''ISE'') Fee Schedule.

[12] This currently includes, and will continue to include options overlying equities, ETFs, ETNs and HOLDRS which are Multiply Listed.

[13] The Exchange will make conforming amendments to Sections I, II and IV of the Pricing Schedule.

[14] The Penny Pilot was established in January 2007; and in October 2009, it was expanded and extended through June 30, 2012. *See* Securities Exchange Act Release Nos. 55153 (January 23, 2007), 72 FR 4553 (January 31, 2007) (SR–Phlx–2006–74) (notice of filing and approval order establishing Penny Pilot); 60873 (October 23, 2009), 74 FR 56675 (November 2, 2009) (SR–Phlx–2009–91) (notice of filing and immediate effectiveness expanding and extending Penny Pilot); 60966 (November 9, 2009), 74 FR 59331 (November 17, 2009) (SR–Phlx–2009–94) (notice of filing and immediate effectiveness adding seventy-five classes to Penny Pilot); 61454 (February 1, 2010), 75 FR 6233 (February 8, 2010) (SR–Phlx–2010–12) (notice of filing and immediate effectiveness adding seventy-five classes to Penny Pilot); 62028 (May 4, 2010), 75 FR 25890 (May 10, 2010) (SR–Phlx–2010–65) (notice of filing and immediate effectiveness adding seventy-five classes to Penny Pilot); 62616 (July 30, 2010), 75 FR 47664 (August 6, 2010) (SR–Phlx–2010–103) (notice of filing and immediate effectiveness adding seventy-five classes to Penny Pilot); 63395 (November 30, 2010), 75 FR 76062 (December 7, 2010) (SR–Phlx–2010–167) (notice of filing and immediate effectiveness extending the Penny Pilot); and 65976 (December 15, 2011), 76 FR 79247 (December 21, 2011) (SR–Phlx–2011–172) (notice of filing and immediate effectiveness extending the Penny Pilot). *See also* Exchange Rule 1034.

such members are trading in their own proprietary account.

The Exchange believes that utilizing the term ''Multiply Listed'' provides greater clarity to the Pricing Schedule. Amending the Firm electronic fees brings those fees more closely in line with Broker-Dealer fees and amending the Electronic Firm Fee Discount to apply per member organization when such members are trading in their own proprietary account is similar to other Exchange pricing.

Miscellaneous

The Exchange proposes to reorder, renumber and delete certain notes in the Preface. Remove outdated references to a ''Fee Schedule'' and replace it with ''Pricing Schedule.'' [15] The Exchange also proposes to capitalize certain terms and add certain acronyms in Sections I, II and IV to provide further clarity and consistency to the Pricing Schedule.

2. Statutory Basis

The Exchange believes that its proposal to amend its Pricing Schedule is consistent with Section 6(b) of the Act [16] in general, and furthers the objectives of Section 6(b)(4) of the Act [17] in particular, in that it is an equitable allocation of reasonable fees and other charges among Exchange members and other persons using its facilities.

Preface and Market Participant Categories

The Exchange's amendment of its market participant categories to define a Specialist [18] separate and apart from other Market Makers is reasonable because other exchanges today similarly define a Specialist separate from other Market Makers.[19] The Exchange believes that separately defining a Specialist is equitable and not unfairly discriminatory because the Exchange is not proposing any changes to the fees currently assessed today for a Specialist. The Exchange will continue to assess Specialists and Market Makers the same fees and other pricing.

Section I—Rebates and Fees for Adding and Removing Liquidity in Select Symbols

The Exchange's amendments to the Single contra-side and Complex Order Fees for Removing Liquidity in Select Symbols, in Section I, Parts A and B are reasonable, equitable and not unfairly discriminatory because the Exchange will continue to assess Specialist and Market Makers the same fees as they are assessed today.

The Exchange believes that its proposal to eliminate the category ''Directed Participant'' from the categories of market participants is reasonable, equitable and not unfairly discriminatory because the Exchange today recognizes Market Makers, which includes Specialists, as a category of market participant. The Exchange instead proposes to amend the Pricing Schedule to define fees applicable to Specialists and Market Makers that execute Customer orders directed to them for execution similar to other exchanges and continues to maintain a $0.02 fee differential. Specialists and Market Makers will continue to receive the same $0.02 reduction in Fees for Removing Liquidity as they do today when executing against a Customer Single contra-side order ($0.36 per contract) or Customer Complex Order ($0.34 per contract) directed to the Specialist or Market Maker for execution. The fee differential of $0.02 per contract as between a Specialist and Market Maker that do not execute Customer orders directed to them for execution and Market Makers and Specialists that do execute Customer orders directed to them for execution is comparable to the fee differential at ISE.[20] Also, Specialists and Market Makers that receive directed orders would continue to receive the $0.23 per contact Rebate for Adding Liquidity for a Directed Participant for a Single contra-side order and would continue to be assessed the $0.10 per contract Fee for Adding Liquidity for a Directed Participant for a Complex Order. The proposed changes are being made to accommodate the elimination of the Directed Participant category and will not result in any fee changes for Specialists and Market Makers. For these reasons, the Exchange believes that the proposed amendments to Section I to remove the category of Directed Participant and add the notation to the Pricing Schedule are reasonable, equitable and not unfairly discriminatory. The Exchange also believes that the amendment to relocate the text concerning the $0.02 fee differential from the pricing table to the section below the pricing table is reasonable, equitable and not unfairly discriminatory because the Exchange will continue to assess the same fees. As noted above, the pricing for Market Makers and Specialists will remain the same.

Section II—Equity Options Fees

The Exchange's proposal to amend the title of Section II of the Pricing Schedule from ''Equity Options Fees'' to ''Multiply Listed Options Fees'' is reasonable, equitable and not unfairly discriminatory because it more specifically describes the rebates and fees in Section II in terms of applicable symbols, similar to the descriptions for Sections I (referring to Select Symbols) and III (referring to Singly-Listed Options) of the Pricing Schedule.

The Exchange's proposal to increase the Firm electronic Options Transaction Charges for both Penny Pilot and non-Penny Pilot Options is reasonable because these amendments more closely align Firm and Broker-Dealer fees. The Exchange is reducing the fee differentials as between Firms and Broker-Dealers for Firm electronic Options Transaction Charges so that the Firm fees approximate the fees assessed Broker-Dealers transacting electronic Penny Pilot and electronic non-Penny Pilot Options. These fees are also within the range of fees assessed by other exchanges.[21]

The Exchange believes that increasing both the Firm electronic Penny Pilot and electronic non-Penny Pilot Options Transaction Charges to $.40 and $.45 per contract, respectively, is equitable and not unfairly discriminatory for the reasons that follow. Today, Firms are assessed a similar electronic Penny Pilot Options Transaction Charge as a Professional ($.25 per contract) and a higher electronic non-Penny Pilot Options Transaction Charge ($.40 per contract) as compared to a Professional ($.25 per contract). Similarly, Firms are assessed higher rates today as compared

[15] *See* Securities Exchange Act Release No. 66668 (March 28, 2012), 77 FR 20090 (April 3, 2012) (SR–PhlX–2012–35) (a rule change which amended the title of the Exchange's Fee Schedule to a ''Pricing Schedule'').

[16] 15 U.S.C. 78f(b).

[17] 15 U.S.C. 78f(b)(4).

[18] A Specialist is an Exchange member who is registered as an options specialist pursuant to Rule 1020(a).

[19] *See* NYSE Amex LLC's (''Amex'') Fee Schedule.

[20] ISE has a $.02 fee differential as between ISE Market Makers who remove liquidity from the Complex Order Book by trading with orders that are preferenced to them ($0.32 per contract) and non-preferenced ISE Market Makers ($0.34 per contract). *See* ISE's Fee Schedule.

[21] NOM assesses Fees for Removing Liquidity of $0.45 per contract for Penny Pilot Options and assesses Fees for Removing Liquidity of $0.45 for Customers and $0.50 for all other market participants in Non-Penny Pilot Options. *See* Chapter XV, Section 2, ''NASDAQ Options Market—Fees and Rebates.'' NYSE Arca, Inc. (''NYSE Arca'') assesses Firm electronic orders a take fee of $0.45 per contract. *See* NYSE Arca's Fee Schedule.

to Specialists and Market Makers.[22] Today a Firm pays an electronic Penny Pilot Options Transaction Charge of $.25 per contract as compared to a Specialist and Market Maker electronic Penny Pilot Options Transaction Charge of $.22 per contract.[23] Today a Firm pays an electronic non-Penny Pilot Options Transaction Charge of $.40 per contract as compared to a Specialist and Market Maker electronic non-Penny Pilot Options Transaction Charge of $.23 per contract. The Firm electronic Penny Pilot and electronic non-Penny Pilot Options Transaction Charges which would increase to $.40 and $.45 per contract, respectively, would result in Firms being assessed higher fees as compared to Professionals, Specialists and Market Makers.[24] The Exchange notes that Specialists and Market Makers are assessed lower Options Transaction Charges as compared to other market participants, except Customers, because they have burdensome quoting obligations [25] to the market which do not apply to Customer, Professionals, Firms and Broker-Dealers. In addition, Specialists and Market Makers are subject to Payment for Order Flow Fees [26] whereas Professionals, Firms and Broker-Dealers are not subject to such fees.[27] The Exchange further notes that is it reasonable, equitable and not unfairly discriminatory to assess Market Makers and Specialists lower transaction fees when compared to Firms and Broker-Dealers because Market Makers and Specialist incur higher costs then other market participants in the form of SQT and RSQT assignment fees,[28] ports,[29] posts [30] and other technology fees.[31]

With respect to Professionals, they have access to more information and technological advantages as compared to Customers, but do not bear the obligations of Specialists and Market Makers. Also, Professionals engage in trading activity similar to that conducted by Specialists and Market Makers. For example, Professionals continue to join bids and offers on the Exchange and thus compete for incoming order flow. For these reasons, the Exchange believes that Professionals may be priced higher than a Customer and may be priced equal to or higher than a Specialist or Market Maker. Also, unlike a Firm, a Professional is not able to cap certain fees and is not qualified to receive certain discounts, which provides Firms the ability to reduce certain transaction fees.[32]

The Exchange believes that increasing the Firm electronic Penny Pilot and electronic non-Penny Pilot Options Transaction Charges to $.40 and $.45 per contract, respectively, does not misalign the current rate differentials between a Firm and Broker-Dealer, but actually narrows that differential. The proposed rate differentials as between a Firm and Broker-Dealer would now be $0.05 per contract for electronic Penny Pilot Options Transaction Charges as compared to $.20 per contract and $.15 per contract for electronic non-Penny Pilot Options Transaction Charges as compared to $.20 per contract. These fee differentials are lower than differentials at other options exchanges for such market participants.[33]

The Exchange's proposed amendment to the Electronic Firm Fee Discount requiring Firms to trade in their own proprietary account is reasonable because the Exchange is seeking to incentivize members for trades on their behalf rather than on behalf of other members. The Exchange currently applies a similar exception with caps applicable to certain strategy executions in Section II of the Pricing Schedule and the Exchange's Monthly Firm Fee Cap. The Exchange's proposed amendment to the Electronic Firm Fee Discount requiring Firms to trade in their own proprietary account is equitable because it will be uniformly applied among market participants.

Miscellaneous

The Exchange's proposals to amend the Table of Contents and Section II of the Pricing to change ''Equity Options'' to ''Multiply Listed Options,'' reorder notes in the Preface, capitalize certain terms, add acronyms in Sections I, II and IV and make other conforming amendments to Sections I, II, III and IV as proposed herein are reasonable, equitable and not unfairly discriminatory because they provide further clarity and consistency to the Pricing Schedule.

The Exchange operates in a highly competitive market, comprised of nine exchanges, in which market participants can easily and readily direct order flow to competing venues if they deem fee and rebate levels at a particular venue to be excessive. Accordingly, the fees that are assessed and the rebates paid by the Exchange must remain competitive with fees charged and rebates paid by other venues and therefore must continue to be reasonable and equitably allocated to those members that opt to direct orders to the Exchange rather than competing venues.

B. Self-Regulatory Organization's Statement on Burden on Competition

The Exchange does not believe that the proposed rule change will impose any burden on competition not necessary or appropriate in furtherance of the purposes of the Act.

C. Self-Regulatory Organization's Statement on Comments on the Proposed Rule Change Received From Members, Participants, or Others

No written comments were either solicited or received.

[22] Today Specialists are included in the current definition of Market Maker.

[23] Section II of the Pricing Schedule contains electronic vs. non-electronic Options Transaction Charges only for Specialists, Market Makers, Broker-Dealers and Firms.

[24] Customers are not assessed Options Transaction Charges in either Penny or non-Penny Pilot options.

[25] *See* Rule 1014 titled ''Obligations and Restrictions Applicable to Specialists and Registered Options Traders.''

[26] Payment for Order Flow Fees are $.25 per contract for options that are trading in the Penny Pilot Program and $.70 per contract for other equity options. *See* Section II of the Pricing Schedule.

[27] Payment for Order Flow Fees are assessed on transactions resulting from Customer orders and are available to be disbursed by the Exchange according to the instructions of the Specialist units/Specialists or Directed ROTs to order flow providers who are members or member organizations, who submit, as agent, customer orders to the Exchange or non-members or non-member organizations who submit, as agent, Customer orders to the Exchange through a member or member organization that is acting as agent for those Customer orders. Specialists and Directed ROTs who participate in the Exchange's payment for order flow program are assessed a Payment for Order Flow Fee, in addition to ROTs. Therefore, the Payment for Order Flow Fee is assessed, in effect, on equity option transactions between a Customer and an ROT, a Customer and a Directed ROT, or a Customer and a Specialist. A ROT, as defined in Exchange Rule 1014(b), is a regular member of the Exchange located on the trading floor who has received permission from the Exchange to trade in options for his own account. *See* Exchange Rule 1014(b)(i) and (ii).

[28] *See* Sections VI, A and B of the Pricing Schedule.

[29] *See* Section VII, B of the Pricing Schedule.

[30] *See* Section VII, A of the Pricing Schedule.

[31] Market Makers and Specialists incur costs related to obtaining data such as TOPO and also increased co-location fees related to a higher volume of message traffic needed to support their regulatory quoting obligations to the market. With respect to TOPO, in order to gain access to additional information helpful in auctions, Market Makers may for example subscribe to TOPO to obtain information that is valuable to them to assist them in successfully making continuous markets as compared to other market participants who do not have similar obligations.

[32] *See* Monthly Firm Fee Cap and proposed Electronic Firm Fee Discount in Section II of the Pricing Schedule.

[33] CBOE currently assesses a Clearing Trading Permit Holder Proprietary an equity options fee of $.20 per contract and a Broker-Dealer electronic order an equity options fee of $.45 per contract. *See* CBOE's Fees Schedule. Similarly, ISE assesses a Firm Proprietary execution fee of $.20 per contract/side and a Non-ISE Market Maker a fee of $.45 per contract side. *See* ISE's Fee Schedule.

III. Date of Effectiveness of the Proposed Rule Change and Timing for Commission Action

The foregoing rule change has become effective pursuant to Section 19(b)(3)(A)(ii) of the Act.[34] At any time within 60 days of the filing of the proposed rule change, the Commission summarily may temporarily suspend such rule change if it appears to the Commission that such action is necessary or appropriate in the public interest, for the protection of investors, or otherwise in furtherance of the purposes of the Act. If the Commission takes such action, the Commission shall institute proceedings to determine whether the proposed rule should be approved or disapproved.

IV. Solicitation of Comments

Interested persons are invited to submit written data, views, and arguments concerning the foregoing, including whether the proposed rule change is consistent with the Act. Comments may be submitted by any of the following methods:

Electronic Comments

- Use the Commission's Internet comment form (*http://www.sec.gov/rules/sro.shtml*); or
- Send an email to *rule-comments@sec.gov*. Please include File Number SR–Phlx–2012–77 on the subject line.

Paper Comments

- Send paper comments in triplicate to Elizabeth M. Murphy, Secretary, Securities and Exchange Commission, 100 F Street NE., Washington, DC 20549–1090.

All submissions should refer to File Number SR–Phlx–2012–77. This file number should be included on the subject line if email is used. To help the Commission process and review your comments more efficiently, please use only one method. The Commission will post all comments on the Commission's Internet Web site (*http://www.sec.gov/rules/sro.shtml).* Copies of the submission, all subsequent amendments, all written statements with respect to the proposed rule change that are filed with the Commission, and all written communications relating to the proposed rule change between the Commission and any person, other than those that may be withheld from the public in accordance with the provisions of 5 U.S.C. 552, will be available for Web site viewing and printing in the Commission's Public Reference Room, 100 F Street NE., Washington, DC 20549, on official business days between the hours of 10:00 a.m. and 3:00 p.m. Copies of the filing also will be available for inspection and copying at the principal office of the Exchange. All comments received will be posted without change; the Commission does not edit personal identifying information from submissions. You should submit only information that you wish to make available publicly. All submissions should refer to File Number SR–Phlx–2012–77 and should be submitted on or before July 9, 2012.

For the Commission, by the Division of Trading and Markets, pursuant to delegated authority.[35]

Kevin M. O'Neill,

Deputy Secretary.

[FR Doc. 2012–14768 Filed 6–15–12; 8:45 am]

BILLING CODE 8011–01–P

[34] 15 U.S.C. 78s(b)(3)(A)(ii).

[35] 17 CFR 200.30–3(a)(12).

SECURITIES AND EXCHANGE COMMISSION

[Release No. 34–67183; File No. SR–NYSEArca–2012–55]

Self-Regulatory Organizations; NYSE Arca, Inc.; Notice of Filing of Proposed Rule Change Relating to the Listing and Trading of the STAR™ Global Buy-Write ETF Under NYSE Arca Equities Rule 8.600

June 12, 2012.

Pursuant to Section 19(b)(1) of the Securities Exchange Act of 1934 (''Act'' or ''Exchange Act'')[1] and Rule 19b–4 thereunder,[2] notice is hereby given that, on May 31, 2012, NYSE Arca, Inc. (''Exchange'' or ''NYSE Arca'') filed with the Securities and Exchange Commission (''Commission'') the proposed rule change as described in Items I, II and III below, which Items have been prepared by the Exchange. The Commission is publishing this notice to solicit comments on the proposed rule change from interested persons.

I. Self-Regulatory Organization's Statement of the Terms of Substance of the Proposed Rule Change

The Exchange proposes to list and trade the following under NYSE Arca Equities Rule 8.600 (''Managed Fund Shares''): STAR™ Global Buy-Write ETF. The text of the proposed rule change is available on the Exchange's Web site at *www.nyse.com,* at the principal office of the Exchange, and at the Commission's Public Reference Room.

II. Self-Regulatory Organization's Statement of the Purpose of, and Statutory Basis for, the Proposed Rule Change

In its filing with the Commission, the self-regulatory organization included statements concerning the purpose of, and basis for, the proposed rule change and discussed any comments it received on the proposed rule change. The text of those statements may be examined at the places specified in Item IV below. The Exchange has prepared summaries, set forth in sections A, B, and C below, of the most significant parts of such statements.

A. Self-Regulatory Organization's Statement of the Purpose of, and Statutory Basis for, the Proposed Rule Change

1. Purpose

The Exchange proposes to list and trade shares (''Shares'') of the following under NYSE Arca Equities Rule 8.600, which governs the listing and trading of Managed Fund Shares:[3] STAR™ Global Buy-Write ETF (''Fund'').[4] The Shares will be offered by AdvisorShares Trust (''Trust''), a statutory trust organized

[1] 15 U.S.C.78s(b)(1).

[2] 17 CFR 240.19b–4.

[3] A Managed Fund Share is a security that represents an interest in an investment company registered under the Investment Company Act of 1940 (15 U.S.C. 80a–1) (''1940 Act'') organized as an open-end investment company or similar entity that invests in a portfolio of securities selected by its investment adviser consistent with its investment objectives and policies. In contrast, an open-end investment company that issues Investment Company Units, listed and traded on the Exchange under NYSE Arca Equities Rule 5.2(j)(3), seeks to provide investment results that correspond generally to the price and yield performance of a specific foreign or domestic stock index, fixed income securities index, or combination thereof.

[4] The Commission approved NYSE Arca Equities Rule 8.600 and the listing and trading of certain funds of the PowerShares Actively Managed Exchange-Traded Funds Trust on the Exchange pursuant to Rule 8.600 in Securities Exchange Act Release No. 57619 (April 4, 2008), 73 FR 19544 (April 10, 2008) (SR–NYSEArca–2008–25). The Commission also previously approved listing and trading on the Exchange of a number of actively managed funds under Rule 8.600. *See, e.g.,* Securities Exchange Act Release Nos. 57801 (May 8, 2008), 73 FR 27878 (May 14, 2008) (SR–NYSEArca–2008–31) (order approving Exchange listing and trading of twelve actively-managed funds of the WisdomTree Trust); 60981 (November 10, 2009), 74 FR 59594 (November 18, 2009) (SR–NYSEArca–2009–79) (order approving listing and trading of five fixed income funds of the PIMCO ETF Trust); 63076 (October 12, 2010), 75 FR 63874 (October 18, 2010) (SR–NYSEArca–2010–79) (order approving listing and trading of Cambria Global Tactical ETF); 63329 (November 17, 2010), 75 FR 71760 (November 24, 2010) (SR–NYSEArca–2010–86) (order approving listing and trading of Peritus High Yield ETF).

under the laws of the State of Delaware and registered with the Commission as an open-end management investment company.[5] The investment adviser to the Fund is AdvisorShares Investments, LLC (''Adviser''). Partnervest Advisory Services, LLC serves as investment sub-adviser to the Fund (''Partnervest'' or ''Sub-Adviser'') and provides day-to-day portfolio management of the Fund. Foreside Fund Services, LLC (''Distributor'') is the principal underwriter and distributor of the Fund's Shares. The Bank of New York Mellon (''Administrator'') serves as administrator, custodian, and transfer agent for the Fund.

Commentary .06 to Rule 8.600 provides that, if the investment adviser to the investment company issuing Managed Fund Shares is affiliated with a broker-dealer, such investment adviser shall erect a ''fire wall'' between the investment adviser and the broker-dealer with respect to access to information concerning the composition and/or changes to such investment company portfolio. In addition, Commentary .06 further requires that personnel who make decisions on the open-end fund's portfolio composition must be subject to procedures designed to prevent the use and dissemination of material, nonpublic information regarding the open-end fund's portfolio.[6] Commentary .06 to Rule 8.600 is similar to Commentary .03(a)(i) and (iii) to NYSE Arca Equities Rule 5.2(j)(3); however, Commentary .06 in connection with the establishment of a ''fire wall'' between the investment adviser and the broker-dealer reflects the applicable open-end fund's portfolio, not an underlying benchmark index, as is the case with index-based funds. Neither the Adviser nor the Sub-Adviser is affiliated with a broker-dealer. In the event (a) the Adviser or the Sub-Adviser becomes newly affiliated with a broker-dealer, or (b) any new adviser or sub-adviser becomes affiliated with a broker-dealer, it will implement a fire wall with respect to such broker-dealer regarding access to information concerning the composition and/or changes to the portfolio, and will be subject to procedures designed to prevent the use and dissemination of material, non-public information regarding such portfolio.

According to the Registration Statement, the Fund's investment objective is to seek consistent repeatable returns across all market cycles. The Fund is a ''fund-of-funds'' and, under normal market conditions,[7] intends to invest at least 60% of its total assets in exchange-traded funds (''ETFs'')[8] and exchange-traded notes (''ETNs'')[9] that seek to track a diversified basket of global indices and investment sectors and in exchange-traded pooled investment vehicles that invest directly in commodities or currencies and that are registered pursuant to the 1933 Act (together with ETFs and ETNs, ''Underlying ETPs'')[10] that meet certain selection criteria established by the Sub-Adviser. The selection criteria include size, historical track record, diversification among indices, the correlation of an index to other indices, and an ability to write exchange-listed covered call options on the particular Underlying ETP.[11] An Underlying ETP may be disposed of should it no longer meet the selection criteria.

The Fund currently intends to invest primarily in the securities of ETFs consistent with the requirements of Section 12(d)(1) of the 1940 Act, or any rule, regulation, or order of the Commission or interpretation thereof.

The Underlying ETPs in which the Fund will invest will primarily be Underlying ETPs that hold substantially all of their assets in securities representing a country (or region) specific index.

The Sub-Adviser seeks to achieve the Fund's investment objective by using a proprietary overwrite strategy known as Volatility Enhanced Global Appreciation (''VEGA''). Through VEGA, the Fund will invest in Underlying ETPs in combination with call options on generally all such Underlying ETPs to seek cumulative price appreciation from the portfolio's global exposure while generating an additional return stream from the sale of covered call and/or cash-secured put options.[12] While the Fund is permitted to invest up to 40% of its total assets in call options on Underlying ETPs, the Adviser expects that, under normal market conditions, the Fund will invest no more than 15% in such call options on a daily basis. To the extent cash and cash equivalents in the Fund's portfolio serve as collateral for cash-secured put options, such cash and cash equivalents may not be invested in Underlying ETPs, additional options or other

[5] The Trust is registered under the 1940 Act. On October 28, 2011, the Trust filed an amendment to its registration statement on Form N–1A under the Securities Act of 1933 (15 U.S.C. 77a) (''1933 Act'') and under the 1940 Act relating to the Fund (File Nos. 333–157876 and 811–22110) (''Registration Statement''). The description of the operation of the Trust and the Fund herein is based, in part, on the Registration Statement. In addition, the Commission has issued an order granting certain exemptive relief to the Trust under the 1940 Act. *See* Investment Company Act Release No. 28822 (July 20, 2009) (File No. 812–13488) (''Exemptive Order'').

[6] An investment adviser to an open-end fund is required to be registered under the Investment Advisers Act of 1940 (''Advisers Act''). As a result, the Adviser and Sub-Adviser and their related personnel are subject to the provisions of Rule 204A–1 under the Advisers Act relating to codes of ethics. This Rule requires investment advisers to adopt a code of ethics that reflects the fiduciary nature of the relationship to clients as well as compliance with other applicable securities laws. Accordingly, procedures designed to prevent the communication and misuse of non-public information by an investment adviser must be consistent with Rule 204A–1 under the Advisers Act. In addition, Rule 206(4)–-7 under the Advisers Act makes it unlawful for an investment adviser to provide investment advice to clients unless such investment adviser has (i) adopted and implemented written policies and procedures reasonably designed to prevent violation, by the investment adviser and its supervised persons, of the Advisers Act and the Commission rules adopted thereunder; (ii) implemented, at a minimum, an annual review regarding the adequacy of the policies and procedures established pursuant to subparagraph (i) above and the effectiveness of their implementation; and (iii) designated an individual (who is a supervised person) responsible for administering the policies and procedures adopted under subparagraph (i) above.

[7] The term ''under normal market conditions'' includes, but is not limited to, the absence of extreme volatility or trading halts in the equity markets or the financial markets generally; operational issues causing dissemination of inaccurate market information; or force majeure type events such as systems failure, natural or man-made disaster, act of God, armed conflict, act of terrorism, riot or labor disruption, or any similar intervening circumstance.

[8] For purposes of this proposed rule change, ETFs are securities registered under the 1940 Act such as those listed and traded on the Exchange under NYSE Arca Equities Rules 5.2(j)(3), 8.100, and 8.600.

[9] For purposes of this proposed rule change, ETNs are securities that are registered pursuant to the 1933 Act such as those listed and traded on the Exchange pursuant to NYSE Arca Equities Rule 5.2(j)(6).

[10] Underlying ETPs include, in addition to ETFs and ETNs, the following securities: Trust Issued Receipts (as described in NYSE Arca Equities Rule 8.200); Commodity-Based Trust Shares (as described in NYSE Arca Equities Rule 8.201); Currency Trust Shares (as described in NYSE Arca Equities Rule 8.202); Commodity Index Trust Shares (as described in NYSE Arca Equities Rule 8.203); and closed-end funds. The Underlying ETPs all will be listed and traded in the U.S. on registered exchanges. The ETFs in which the Fund may invest will primarily be index-based ETFs that hold substantially all of their assets in securities representing a specific index.

[11] The options in which the Fund will invest will be U.S. exchange-listed.

[12] According to the Registration Statement, a covered call option involves holding a long position in a particular asset, in this case shares of an Underlying ETP, and writing a call option on that same asset with the goal of realizing additional income from the option premium. A put option is a contract that gives the owner of the option the right to sell a specified amount of the asset underlying the option at a specified price (''strike price'') within a specified time. When a put option is exercised or assigned, the writer of the option is obligated to purchase the requisite amount of the asset underlying the option to complete the sale. A put option is considered cash-secured when the writer of the put option segregates an amount of cash or cash equivalents sufficient to cover the purchase price of the asset underlying the option.

similar investments in pursuit of the Fund's investment objective. Rather, on a day-to-day basis, such collateral may be invested in U.S. Government securities, short-term, high quality fixed income securities, money market instruments, cash, and other cash equivalents with maturities of one year or less, or Underlying ETPs that hold such investments.[13]

The Sub-Adviser will use VEGA, a proprietary quantitative and qualitative investment process, to determine the optimal Underlying ETPs and options for the strategy. The process focuses on the performance of a comprehensive portfolio of assets based on the combination of risk, return, and their correlation to each other. Consistent with VEGA, call options will be sold on generally all of the Underlying ETPs at a strike price equivalent to targets based on volatility and quantitative criteria. As calls are covered and/or expire, additional options on the Underlying ETPs will be sold. The average time until expiration for the option portfolio will be typically one quarter (91 days) or less, so that premiums may be received on options on Underlying ETPs approximately four times per year. The Sub-Adviser, however, will reserve the right to close out or enter into options on a more or less frequent basis in its discretion if it believes it is in the best interest of the Fund. The Sub-Adviser periodically will monitor the performance of the Fund's portfolio and systematically rebalance and initiate tactical shifts in the underlying investments when the strategy indicates it is both optimal and beneficial to do so.

VEGA is designed to generate quarterly returns in the form of premiums received from the sale of covered call and/or cash-secured put options. The amount of the premium will typically be determined at the start of the quarter, and realized either at expiration or sooner if the strategy determines that conditions warrant covering the short option position beforehand.[14]

Except for premium amounts required for transactional and portfolio management purposes, the Sub-Adviser, in its discretion, may allocate the accumulated premium in ''principal protection'' and/or ''reinvestment strategies,'' as described below.

The ''principal protection'' feature is intended as a means to profit and/or hedge against potential price declines of 20% or greater of Underlying ETPs. The feature may be implemented when volatility declines and/or security prices rise and the Sub-Adviser determines the cost of principal protection to be beneficial. The cost of the protection is expected to be paid from accumulated option premiums but principal may be used. The use of principal protection entails the purchase of put options on Underlying ETPs representing some or all of the Fund's portfolio holdings. The risk of buying long puts is limited to the loss of the premium paid for the purchase of the put.

Option premiums received by the Fund will remain in cash or cash equivalents or may be invested in Underlying ETPs that invest primarily in U.S. treasuries or other cash equivalent securities.

The Sub-Adviser also will utilize a reinvestment strategy whereby accumulated option premiums may be reinvested back into additional shares of Underlying ETPs held by the Fund based on the Sub-Adviser's view of the market.

Principal Fund Investments

The Fund, through its investment in Underlying ETPs, may invest in equity securities. Equity securities represent ownership interests in a company or partnership and consist of common stocks, preferred stocks, warrants to acquire common stock, securities convertible into common stock, and investments in master limited partnerships, rights, and depositary receipts, including American Depositary Receipts (''ADRs'') and Global Depositary Receipts (''GDRs'').[15] The Fund, through its investment in Underlying ETPs, may purchase equity securities traded in the U.S. on registered exchanges or the over-the-counter market.

The Fund, through its investment in Underlying ETPs, may invest in the equity securities of foreign issuers, including the securities of foreign issuers in emerging countries. Emerging or developing markets exist in countries that are considered to be in the initial stages of industrialization.

The Fund, through its investment in Underlying ETPs, may invest in closed-end funds, pooled investment vehicles that are registered under the 1940 Act and whose shares are listed and traded on U.S. national securities exchanges.

The Fund, or the Underlying ETPs in which it invests, may invest in U.S. government securities. Securities issued or guaranteed by the U.S. government or its agencies or instrumentalities include U.S. Treasury securities, which are backed by the full faith and credit of the U.S. Treasury and which differ only in their interest rates, maturities, and times of issuance. According to the Registration Statement, certain U.S. government securities are issued or guaranteed by agencies or instrumentalities of the U.S. government including, but not limited to, obligations of U.S. government agencies or instrumentalities such as Fannie Mae, Freddie Mac, the Government National Mortgage Association, the Small

[13] According to the Registration Statement, all options written on indices or securities must be covered. The Commission staff has indicated that a written call option on a security may be covered if a fund: (1) Owns the security underlying the call until the option is exercised or expires; (2) holds an American-style call on the same security as the call written with an exercise price (a) no greater than the exercise price of the call written or (b) greater than the exercise price of the call written if the difference is maintained by the fund in cash or other liquid assets designated on the fund's records or placed in a segregated account with the fund's custodian; (3) has an absolute and immediate right to acquire the security without additional cost (or if additional consideration is required, cash or other liquid assets in such amount have been segregated); or (4) segregates cash or other liquid assets on the fund's records or with the custodian in an amount equal to (when added to any margin on deposit) the current market value of the call option, but not less than the exercise price, marked to market daily. *See, e.g.,* letter dated February 2, 1989, from L. Hope Lewis, Division of Investment Management, to Alan Rosenblat, Dechert, Price & Rhoads (regarding Hutton Options Trading L.P.; File No. 811–5391); letter dated March 30, 1987, from Gerald T. Lins, Division of Investment Management, to Thomas E. Heftler, Strook, Strook and Lavan (regarding Dreyfus Strategic Investing and Dreyfus Strategic Income; File Nos. 811–4688 and 811–4748). If the call option is exercised by the purchaser during the option period, the seller is required to deliver the underlying security against payment of the exercise price or pay the difference. The seller's obligation terminates upon expiration of the option period or when the seller executes a closing purchase transaction with respect to such option. All put options written by the Fund will be covered by: (1) Segregating cash, cash equivalents, such as U.S. Treasury securities or overnight repurchase agreements, or other liquid assets on the Fund's records or with the custodian having a value at least equal to the exercise price of the option (less cash received, if any); or (2) holding a put option on the same security as the option written where the exercise price of the written put option is (i) equal to or higher than the exercise price of the option written or (ii) less than the exercise price of the option written provided the Fund segregates cash or other liquid assets in the amount of the difference.

[14] According to the Registration Statement, the risks of covered call writing include the potential for the market to rise sharply. In such instance, the buyer of the call option would likely acquire the Underlying ETP from the Fund and the return on that Underlying ETP would be limited to the premium received and the difference between the strike price and the purchase price until such time as the Underlying ETP is repurchased as applicable. The risks of cash-secured put writing include the potential for the price of the Underlying ETP to decline significantly causing the put writer, the Fund, to have an unrealized loss due to the high stock purchase price.

[15] ADRs and GDRs are certificates evidencing ownership of shares of a foreign issuer. Depositary receipts may be sponsored or unsponsored. These certificates are issued by depositary banks and generally trade on an established market in the United States or elsewhere.

Business Administration, the Federal Farm Credit Administration, the Federal Home Loan Banks, Banks for Cooperatives (including the Central Bank for Cooperatives), the Federal Land Banks, the Federal Intermediate Credit Banks, the Tennessee Valley Authority, the Export-Import Bank of the United States, the Commodity Credit Corporation, the Federal Financing Bank, the Student Loan Marketing Association, the National Credit Union Administration, and the Federal Agricultural Mortgage Corporation.

The Fund, through its investments in Underlying ETPs from time to time, in the ordinary course of business, may purchase securities on a when-issued or delayed-delivery basis (*i.e.,* delivery and payment can take place between a month and 120 days after the date of the transaction).

The Fund, or the Underlying ETPs in which it invests, may invest in U.S. Treasury zero-coupon bonds. The Fund, through its investment in ETFs, may invest in shares of real estate investment trusts (''REITs'').

Other Investments

To respond to adverse market, economic, political, or other conditions, the Fund may invest 100% of its total assets, without limitation, in high-quality debt securities and money market instruments either directly or through Underlying ETPs. The Fund may be invested in this manner for extended periods depending on the Sub-Adviser's assessment of market conditions. Debt securities and money market instruments include shares of other mutual funds, commercial paper, certificates of deposit, bankers' acceptances, U.S. Government securities, repurchase agreements, and bonds that are BBB or higher. The Fund may also invest a substantial portion of its assets in such instruments at any time to maintain liquidity or pending selection of investments in accordance with its policies.

The Fund may invest in derivatives, including, for example, options, futures, options on futures, and swaps. While the Fund currently does not intend to invest in swaps, it may invest up to 10% of its total assets in swaps. The Fund may invest in derivatives to gain market exposure, enhance returns, or hedge against market declines.

Other than options on Underlying ETPs in which the Fund may invest, as described above, the Fund may trade U.S. exchange-listed put and call options on other securities, securities indices, and currencies, as the Sub-Adviser determines is appropriate in seeking the Fund's investment objective and except as restricted by the Fund's investment limitations.[16] While the Fund may invest in put and call options on other securities, the Adviser expects that, under normal market conditions, the Fund will invest from 0% up to 10% in such put and call options on a daily basis.

The Fund may invest up to 10% of its total assets in futures contracts and related options on futures contracts for bona fide hedging; attempting to offset changes in the value of securities held or expected to be acquired or be disposed of; attempting to gain exposure to a particular market, index, or instrument; or other risk management purposes. To the extent the Fund uses futures and/or options on futures, it will do so in accordance with Rule 4.5 under the Commodity Exchange Act (''CEA'').[17]

The Fund may enter into repurchase agreements with financial institutions, which may be deemed to be loans. The Fund also may enter into reverse repurchase agreements without limit as part of the Fund's investment strategy.

The Fund may not with respect to 75% of its total assets, purchase securities of any issuer (except securities issued or guaranteed by the U.S. Government, its agencies or instrumentalities, or shares of investment companies) if, as a result, (i) more than 5% of its total assets would be invested in the securities of such issuer, or (ii) more than 10% of the outstanding voting securities of any one issuer would be held by the Fund. For purposes of this policy, the issuer of the underlying security will be deemed to be the issuer of any respective depositary receipt.[18]

The Fund may not invest 25% or more of its total assets in the securities of one or more issuers conducting their principal business activities in the same industry or group of industries. This limitation does not apply to investments in securities issued or guaranteed by the U.S. Government, its agencies or instrumentalities, or shares of investment companies. The Fund will not invest 25% or more of its total assets in any investment company that so concentrates.[19]

The Fund may hold up to an aggregate amount of 15% of its net assets in illiquid securities (calculated at the time of investment), including Rule 144A securities and loan participation interests. The Fund will monitor its portfolio liquidity on an ongoing basis to determine whether, in light of current circumstances, an adequate level of liquidity is being maintained, and will consider taking appropriate steps in order to maintain adequate liquidity if, through a change in values, net assets, or other circumstances, more than 15% of the Fund's net assets are held in illiquid securities. Illiquid securities include securities subject to contractual or other restrictions on resale and other instruments that lack readily available markets as determined in accordance with Commission staff guidance.[20]

According to the Registration Statement, the Fund will seek to qualify for treatment as a Regulated Investment Company (''RIC'') under the Internal Revenue Code.[21]

[16] *See supra* note 11.

[17] According to the Registration Statement, the Trust, on behalf of all of its series, including the Fund, has filed a notice of eligibility for exclusion from the definition of the term ''commodity pool operator'' in accordance with Rule 4.5 and, therefore, the Fund is not subject to registration or regulation as a commodity pool operator under the CEA.

[18] The diversification standard is set forth in Section 5(b)(1) of the 1940 Act.

[19] *See* Form N–1A, Item 9. The Commission has taken the position that a fund is concentrated if it invests more than 25% of the value of its total assets in any one industry. *See, e.g.,* Investment Company Act Release No. 9011 (October 30, 1975), 40 FR 54241 (November 21, 1975).

[20] The Commission has stated that long-standing Commission guidelines have required open-end funds to hold no more than 15% of their net assets in illiquid securities and other illiquid assets. *See* Investment Company Act Release No. 28193 (March 11, 2008), 73 FR 14618 (March 18, 2008), footnote 34. *See also* Investment Company Act Release No. 5847 (October 21, 1969), 35 FR 19989 (December 31, 1970) (Statement Regarding ''Restricted Securities''); Investment Company Act Release No. 18612 (March 12, 1992), 57 FR 9828 (March 20, 1992) (Revisions of Guidelines to Form N–1A). A fund's portfolio security is illiquid if it cannot be disposed of in the ordinary course of business within seven days at approximately the value ascribed to it by the fund. *See* Investment Company Act Release No. 14983 (March 12, 1986), 51 FR 9773 (March 21, 1986) (adopting amendments to Rule 2a–7 under the 1940 Act); Investment Company Act Release No. 17452 (April 23, 1990), 55 FR 17933 (April 30, 1990) (adopting Rule 144A under the 1933 Act).

[21] 26 U.S.C. 851. One of several requirements for RIC qualification is that the Fund must receive at least 90% of the Fund's gross income each year from dividends, interest, payments with respect to securities loans, gains from the sale or other disposition of stock, securities or foreign currencies, or other income derived with respect to the Fund's investments in stock, securities, foreign currencies and net income from an interest in a qualified publicly traded partnership (''90% Test''). A second requirement for qualification as a RIC is that the Fund must diversify its holdings so that, at the end of each fiscal quarter of the Fund's taxable year: (a) at least 50% of the market value of the Fund's total assets is represented by cash and cash items, U.S. Government securities, securities of other RICs, and other securities, with these other securities limited, in respect to any one issuer, to an amount not greater than 5% of the value of the Fund's total assets or 10% of the outstanding voting securities of such issuer; and (b) not more than 25% of the value of its total assets are invested in the securities (other than U.S. Government securities or securities of other RICs) of any one issuer or two or more issuers which the Fund controls and which are

Continued

Except for Underlying ETPs that may hold non-U.S. issues, the Fund will not otherwise invest in non-U.S.-registered issues.

The Fund does not intend to invest in leveraged, inverse, or inverse leveraged Underlying ETPs. The Fund's investments will be consistent with the Fund's investment objective and will not be used to enhance leverage. That is, while the Fund will be permitted to borrow as permitted under the 1940 Act, the Fund's investments will not be used to seek performance that is the multiple or inverse multiple (*i.e.,* 2Xs and 3Xs) of the Fund's broad-based securities market index (as defined in Form N–1A).[22]

Determination of Net Asset Value

The Fund will calculate net asset value (''NAV'') by: (i) Taking the current market value of its total assets; (ii) subtracting any liabilities; and (iii) dividing that amount by the total number of Shares owned by shareholders.

The Fund will calculate NAV once each business day as of the regularly scheduled close of trading on the New York Stock Exchange (''NYSE'') (normally, 4:00 p.m., Eastern Time).

In calculating NAV, the Fund generally will value investment portfolios at market price. If market prices are unavailable or the Fund thinks that they are unreliable, or when the value of a security has been materially affected by events occurring after the relevant market closes, the Fund will price those securities at fair value as determined in good faith using methods approved by the Fund's Board of Trustees.[23]

Creation and Redemption of Shares

The Fund will offer and issue Shares on a continuous basis at NAV only in aggregated lots of 50,000 or more Shares (each a ''Creation Unit'' or ''Creation Unit Aggregation''), generally in exchange for: (i) A basket of equity securities (''Deposit Securities''); and (ii) an amount of cash (''Cash Component''). Shares are redeemable only in Creation Unit Aggregations, and, generally, in exchange for portfolio securities and a specified cash payment.

A ''creator'' will enter into an authorized participant agreement (''Participant Agreement'') with the Distributor or use a Depository Trust Company (''DTC'') participant who has executed a Participant Agreement (''Authorized Participant''), and deposit into the Fund a portfolio of securities closely approximating the holdings of the Fund and a specified amount of cash, together totaling the NAV of the Creation Unit(s), in exchange for 50,000 Shares of the Fund (or multiples thereof).

All orders to purchase Creation Units must be received by the Distributor no later than the close of the regular trading session on the NYSE (ordinarily 4:00 p.m., Eastern Time) on the date such order is placed in order for the purchase of Creation Units to be effected based on the NAV of Shares of the Fund as next determined on such date after receipt of the order in proper form.

Shares may be redeemed only in Creation Units at their NAV next determined after receipt of a redemption request in proper form by the Fund through the Administrator and only on a business day. With respect to the Fund, the Administrator, through the National Securities Clearing Corporation (''NSCC''), will make available immediately prior to the opening of business on the Exchange (currently 9:30 a.m., Eastern Time) on each business day, the portfolio of securities (''Fund Securities'') that will be applicable to redemption requests received in proper form on that day. Fund Securities received on redemption may not be identical to Deposit Securities which are applicable to creations of Creation Units. Unless cash redemptions are available or specified for the Fund, the redemption proceeds for a Creation Unit generally will consist of Fund Securities plus cash in an amount equal to the difference between the NAV of the Shares being redeemed, as next determined after a receipt of a request in proper form, and the value of the Fund Securities less a redemption transaction fee, as described in the Registration Statement. In the event that the Fund Securities have a value greater than the NAV of the Shares, a compensating cash payment equal to the differential will be required to be made by or through an Authorized Participant by the redeeming shareholder.

The Shares will conform to the initial and continued listing criteria under NYSE Arca Equities Rule 8.600. The Exchange represents that, for initial and/or continued listing, the Fund will be in compliance with Rule 10A–3 under the Exchange Act,[24] as provided by NYSE Arca Equities Rule 5.3. A minimum of 100,000 Shares for the Fund will be outstanding at the commencement of trading on the Exchange. The Exchange will obtain a representation from the issuer of the Shares that the NAV per Share will be calculated daily and that the NAV and the Disclosed Portfolio will be made available to all market participants at the same time.

Availability of Information

The Fund's Web site (*www.advisorshares.com*), which will be publicly available prior to the public offering of Shares, will include a form of the prospectus for the Fund that may be downloaded. The Fund's Web site will include additional quantitative information updated on a daily basis, including, for the Fund, (1) daily trading volume, the prior business day's reported closing price, NAV and mid-point of the bid/ask spread at the time of calculation of such NAV (''Bid/Ask Price''),[25] and a calculation of the premium and discount of the Bid/Ask Price against the NAV, and (2) data in chart format displaying the frequency distribution of discounts and premiums of the daily Bid/Ask Price against the NAV, within appropriate ranges, for each of the four previous calendar quarters. On each business day, before commencement of trading in Shares in the Core Trading Session on the Exchange, the Fund will disclose on its Web site the Disclosed Portfolio as defined in NYSE Arca Equities Rule 8.600(c)(2) that will form the basis for the Fund's calculation of NAV at the end of the business day.[26]

On a daily basis, the Adviser will disclose for each portfolio security and other financial instrument of the Fund the following information on the Fund's Web site: Ticker symbol (if applicable), name of security and financial instrument, number of shares or dollar value of securities and financial instruments held in the portfolio, and percentage weighting of the security and financial instrument in the portfolio.

engaged in the same, similar, or related trades or businesses, or the securities of one or more qualified publicly traded partnership (''Asset Test'').

[22] The Fund's broad-based securities market index, which is to be determined, will be identified in an amendment to the Registration Statement.

[23] The use of fair valuation in pricing a security involves the consideration of a number of subjective factors and therefore, is susceptible to the unavoidable risk that the valuation may be higher or lower than the price at which the security might actually trade if a reliable market price were readily available.

[24] 17 CFR 240.10A–3.

[25] The Bid/Ask Price of the Fund will be determined using the mid-point of the highest bid and the lowest offer on the Exchange as of the time of calculation of the Fund's NAV. The records relating to Bid/Ask Prices will be retained by the Fund and its service providers.

[26] Under accounting procedures followed by the Fund, trades made on the prior business day (''T'') will be booked and reflected in NAV on the current business day (''T+1''). Accordingly, the Fund will be able to disclose at the beginning of the business day the portfolio that will form the basis for the NAV calculation at the end of the business day.

The Web site information will be publicly available at no charge.

In addition, a basket composition file, which includes the security names and share quantities required to be delivered in exchange for the Fund's Shares, together with estimates and actual cash components, will be publicly disseminated daily prior to the opening of the NYSE via NSCC. The basket represents one Creation Unit of the Fund.

Investors can also obtain the Trust's Statement of Additional Information (''SAI''), the Fund's Shareholder Reports, and the Trust's Form N–CSR and Form N–SAR, filed twice a year. The Trust's SAI and Shareholder Reports are available free upon request from the Trust, and those documents and the Form N–CSR and Form N–SAR may be viewed on-screen or downloaded from the Commission's Web site at *www.sec.gov.* Information regarding market price and trading volume of the Shares will be continually available on a real-time basis throughout the day on brokers' computer screens and other electronic services. Information regarding the previous day's closing price and trading volume information for the Shares will be published daily in the financial section of newspapers. Quotation and last-sale information for the Shares will be available via the Consolidated Tape Association (''CTA'') high-speed line and, for the Underlying ETPs, will be available from the national securities exchanges on which they are listed. Quotation and last-sale information for the U.S. exchange-listed options in which the Fund will invest will be available from the applicable U.S. options exchange via the Options Price Reporting Authority (''OPRA''). In addition, the Portfolio Indicative Value, as defined in NYSE Arca Equities Rule 8.600(c)(3), will be widely disseminated by one or more major market data vendors at least every 15 seconds during the Core Trading Session.[27] The dissemination of the Portfolio Indicative Value, together with the Disclosed Portfolio, will allow investors to determine the value of the underlying portfolio of the Fund on a daily basis and to provide a close estimate of that value throughout the trading day. The intra-day, closing, and settlement prices of the other portfolio securities and instruments are also readily available from the national securities exchanges trading such securities, automated quotation systems, published or other public sources, or on-line information services such as Bloomberg or Reuters.

Additional information regarding the Trust and the Shares, including investment strategies, risks, creation and redemption procedures, fees, portfolio holdings disclosure policies, distributions, and taxes is included in the Registration Statement. All terms relating to the Fund that are referred to, but not defined in, this proposed rule change are defined in the Registration Statement.

Trading Halts

With respect to trading halts, the Exchange may consider all relevant factors in exercising its discretion to halt or suspend trading in the Shares of the Fund.[28] Trading in Shares of the Fund will be halted if the circuit breaker parameters in NYSE Arca Equities Rule 7.12 have been reached. Trading also may be halted because of market conditions or for reasons that, in the view of the Exchange, make trading in the Shares inadvisable. These may include: (1) The extent to which trading is not occurring in the securities and/or the financial instruments comprising the Disclosed Portfolio of the Fund; or (2) whether other unusual conditions or circumstances detrimental to the maintenance of a fair and orderly market are present. Trading in the Shares will be subject to NYSE Arca Equities Rule 8.600(d)(2)(D), which sets forth circumstances under which Shares of the Fund may be halted.

Trading Rules

The Exchange deems the Shares to be equity securities, thus rendering trading in the Shares subject to the Exchange's existing rules governing the trading of equity securities. Shares will trade on the NYSE Arca Marketplace from 4:00 a.m. to 8:00 p.m., Eastern Time in accordance with NYSE Arca Equities Rule 7.34 (Opening, Core, and Late Trading Sessions). The Exchange has appropriate rules to facilitate transactions in the Shares during all trading sessions. As provided in NYSE Arca Equities Rule 7.6, Commentary .03, the minimum price variation (''MPV'') for quoting and entry of orders in equity securities traded on the NYSE Arca Marketplace is $0.01, with the exception of securities that are priced less than $1.00 for which the MPV for order entry is $0.0001.

Surveillance

The Exchange intends to utilize its existing surveillance procedures applicable to derivative products (which include Managed Fund Shares) to monitor trading in the Shares. The Exchange represents that these procedures are adequate to properly monitor Exchange trading of the Shares in all trading sessions and to deter and detect violations of Exchange rules and applicable federal securities laws.

The Exchange's current trading surveillance focuses on detecting securities trading outside their normal patterns. When such situations are detected, surveillance analysis follows and investigations are opened, where appropriate, to review the behavior of all relevant parties for all relevant trading violations.

The Exchange may obtain information via the Intermarket Surveillance Group (''ISG'') from other exchanges that are members of ISG or with which the Exchange has in place a comprehensive surveillance sharing agreement.[29] In addition, the Exchange could obtain information from the U.S. exchanges, all of which are ISG members, on which the Underlying ETPs and options are listed and traded.

In addition, the Exchange also has a general policy prohibiting the distribution of material, non-public information by its employees.

Information Bulletin

Prior to the commencement of trading, the Exchange will inform its Equity Trading Permit (''ETP'') Holders in an Information Bulletin (''Bulletin'') of the special characteristics and risks associated with trading the Shares. Specifically, the Bulletin will discuss the following: (1) The procedures for purchases and redemptions of Shares in Creation Unit Aggregations (and that Shares are not individually redeemable); (2) NYSE Arca Equities Rule 9.2(a), which imposes a duty of due diligence on its ETP Holders to learn the essential facts relating to every customer prior to trading the Shares; (3) the risks involved in trading the Shares during the Opening and Late Trading Sessions when an updated Portfolio Indicative Value will not be calculated or publicly disseminated; (4) how information regarding the Portfolio Indicative Value is disseminated; (5) the requirement that ETP Holders deliver a prospectus to

[27] Currently, it is the Exchange's understanding that several major market data vendors widely disseminate Portfolio Indicative Values taken from CTA or other data feeds.

[28] *See* NYSE Arca Equities Rule 7.12, Commentary .04.

[29] For a list of the current members of ISG, see *www.isgportal.org.* The Exchange notes that not all components of the Disclosed Portfolio for the Fund may trade on markets that are members of ISG or with which the Exchange has in place a comprehensive surveillance sharing agreement.

investors purchasing newly issued Shares prior to or concurrently with the confirmation of a transaction; and (6) trading information.

In addition, the Bulletin will reference that the Fund is subject to various fees and expenses described in the Registration Statement. The Bulletin will discuss any exemptive, no-action, and interpretive relief granted by the Commission from any rules under the Exchange Act. The Bulletin will also disclose that the NAV for the Shares will be calculated after 4:00 p.m., Eastern Time each trading day.

2. Statutory Basis

The basis under the Exchange Act for this proposed rule change is the requirement under Section 6(b)(5) [30] that an exchange have rules that are designed to prevent fraudulent and manipulative acts and practices, to promote just and equitable principles of trade, to remove impediments to, and perfect the mechanism of a free and open market, and, in general, to protect investors and the public interest.

The Exchange believes that the proposed rule change is designed to prevent fraudulent and manipulative acts and practices in that the Shares will be listed and traded on the Exchange pursuant to the initial and continued listing criteria in NYSE Arca Equities Rule 8.600. Neither the Adviser nor the Sub-Adviser is affiliated with a broker-dealer. The Exchange has in place surveillance procedures that are adequate to properly monitor trading in the Shares in all trading sessions and to deter and detect violations of Exchange rules and applicable federal securities laws. The Exchange may obtain information via ISG from other exchanges that are members of ISG or with which the Exchange has entered into a comprehensive surveillance sharing agreement. The holdings of the Fund will be comprised primarily of U.S. exchange-listed Underlying ETPs. The listing and trading of such Underlying ETPs is subject to rules of the exchanges on which they are listed and traded, as approved by the Commission. The options contracts held by the Fund will be U.S. exchange-listed. Except for Underlying ETPs that may hold non-U.S. issues, the Fund will not otherwise invest in non-U.S.-registered issues. The Fund may invest up to 10% of its total assets in futures contracts and related options on futures contracts for bona fide hedging. While the Fund may invest in put and call options on securities other than Underlying ETPs, the Adviser expects that, under normal market conditions, the Fund will invest from 0% up to 10% in such put and call options on a daily basis. While the Fund currently does not intend to invest in swaps, it may invest up to 10% of its total assets in swaps. The Fund may hold up to an aggregate amount of 15% of its net assets in illiquid securities (calculated at the time of investment), including Rule 144A securities and loan participation interests. The Fund does not intend to invest in leveraged, inverse, or inverse leveraged Underlying ETPs. The Fund's investments will be consistent with the Fund's investment objective and will not be used to enhance leverage.

The proposed rule change is designed to promote just and equitable principles of trade and to protect investors and the public interest in that the Exchange will obtain a representation from the issuer of the Shares that the NAV per Share will be calculated daily and that the NAV and the Disclosed Portfolio will be made available to all market participants at the same time. In addition, a large amount of information will be publicly available regarding the Fund and the Shares, thereby promoting market transparency. Moreover, the Portfolio Indicative Value will be widely disseminated at least every 15 seconds during the Core Trading Session by one or more major market data vendors. Quotation and last-sale information for the Shares will be available via CTA high-speed line and, for the Underlying ETPs, will be available from the national securities exchanges on which they are listed. Quotation and last-sale information for the U.S. exchange-listed options in which the Fund will invest will be available via OPRA. On each business day, before commencement of trading in Shares in the Core Trading Session on the Exchange, the Fund will disclose on its Web site the Disclosed Portfolio that will form the basis for the Fund's calculation of NAV at the end of the business day. Information regarding market price and trading volume of the Shares will be continually available on a real-time basis throughout the day on brokers' computer screens and other electronic services, and quotation and last-sale information will be available via the CTA high-speed line. The Web site for the Fund will include a form of the prospectus for the Fund and additional data relating to NAV and other applicable quantitative information. Moreover, prior to the commencement of trading, the Exchange will inform its ETP Holders in an Information Bulletin of the special characteristics and risks associated with trading the Shares. Trading in Shares of the Fund will be halted if the circuit breaker parameters in NYSE Arca Equities Rule 7.12 have been reached or because of market conditions or for reasons that, in the view of the Exchange, make trading in the Shares inadvisable, and trading in the Shares will be subject to NYSE Arca Equities Rule 8.600(d)(2)(D), which sets forth circumstances under which Shares of the Fund may be halted. In addition, as noted above, investors will have ready access to information regarding the Fund's holdings, the Portfolio Indicative Value, the Disclosed Portfolio, and quotation and last-sale information for the Shares.

The proposed rule change is designed to perfect the mechanism of a free and open market and, in general, to protect investors and the public interest in that it will facilitate the listing and trading of additional types of actively-managed exchange-traded products that will enhance competition among market participants, to the benefit of investors and the marketplace. As noted above, the Exchange has in place surveillance procedures relating to trading in the Shares and may obtain information via ISG from other exchanges that are members of ISG or with which the Exchange has entered into a comprehensive surveillance sharing agreement. In addition, as noted above, investors will have ready access to information regarding the Fund's holdings, the Portfolio Indicative Value, the Disclosed Portfolio, and quotation and last-sale information for the Shares.

B. Self-Regulatory Organization's Statement on Burden on Competition

The Exchange does not believe that the proposed rule change will impose any burden on competition that is not necessary or appropriate in furtherance of the purposes of the Act.

C. Self-Regulatory Organization's Statement on Comments on the Proposed Rule Change Received From Members, Participants, or Others

No written comments were solicited or received with respect to the proposed rule change.

III. Date of Effectiveness of the Proposed Rule Change and Timing for Commission Action

Within 45 days of the date of publication of this notice in the **Federal Register** or within such longer period (i) as the Commission may designate up to 90 days of such date if it finds such longer period to be appropriate and publishes its reasons for so finding or

[30] 15 U.S.C. 78f(b)(5).

(ii) as to which the self-regulatory organization consents, the Commission will:

(A) By order approve or disapprove the proposed rule change, or

(B) Institute proceedings to determine whether the proposed rule change should be disapproved.

IV. Solicitation of Comments

Interested persons are invited to submit written data, views, and arguments concerning the foregoing, including whether the proposed rule change is consistent with the Act. Comments may be submitted by any of the following methods:

Electronic Comments

- Use the Commission's Internet comment form (*http://www.sec.gov/rules/sro.shtml*); or
- Send an email to *rule-comments@sec.gov.* Please include File Number SR–NYSEArca–2012–55 on the subject line.

Paper Comments

- Send paper comments in triplicate to Elizabeth M. Murphy, Secretary, Securities and Exchange Commission, 100 F Street NE., Washington, DC 20549–1090.

All submissions should refer to File Number SR–NYSEArca–2012–55. This file number should be included on the subject line if email is used. To help the Commission process and review your comments more efficiently, please use only one method. The Commission will post all comments on the Commission's Internet Web site (*http://www.sec.gov/rules/sro.shtml*). Copies of the submission, all subsequent amendments, all written statements with respect to the proposed rule change that are filed with the Commission, and all written communications relating to the proposed rule change between the Commission and any person, other than those that may be withheld from the public in accordance with the provisions of 5 U.S.C. 552, will be available for Web site viewing and printing in the Commission's Public Reference Section, 100 F Street NE., Washington, DC 20549–1090, on official business days between 10:00 a.m. and 3:00 p.m. Copies of the filing will also be available for inspection and copying at the NYSE's principal office and on its Internet Web site at *www.nyse.com.* All comments received will be posted without change; the Commission does not edit personal identifying information from submissions. You should submit only information that you wish to make available publicly. All submissions should refer to File Number SR–NYSEArca–2012–55 and should be submitted on or before July 9, 2012.

For the Commission, by the Division of Trading and Markets, pursuant to delegated authority.[31]

Kevin M. O'Neill,

Deputy Secretary.

[FR Doc. 2012–14767 Filed 6–15–12; 8:45 am]

BILLING CODE 8011–01–P

SECURITIES AND EXCHANGE COMMISSION

[Release No. 34–67185; File No. SR–NYSE–2012–17]

Self-Regulatory Organizations; New York Stock Exchange LLC; Notice of Filing of Proposed Rule Change Amending Independence Policy of the Board of Directors of NYSE Euronext and Creating New Independence Policy for Boards of Directors of the New York Stock Exchange LLC, NYSE MKT LLC, NYSE Regulation, Inc. and NYSE Market, Inc.

June 12, 2012.

Pursuant to Section 19(b)(1) of the Securities Exchange Act of 1934 (''Act'')[1] and Rule 19b–4 thereunder,[2] notice is hereby given that on June 6, 2012, New York Stock Exchange LLC (''NYSE'' or the ''Exchange'') filed with the Securities and Exchange Commission (''Commission'') the proposed rule change as described in Items I and II below, which Items have been prepared by the Exchange. The Commission is publishing this notice to solicit comments on the proposed rule change from interested persons.

I. Self-Regulatory Organization's Statement of the Terms of Substance of the Proposed Rule Change

The Exchange proposes to amend the Independence Policy of the Board of Directors of NYSE Euronext (the ''NYSE Euronext Director Independence Policy'') and create a new independence policy (the ''Subsidiary Director Independence Policy'') for the boards of directors of the Exchange, NYSE MKT LLC (''NYSE MKT''), NYSE Market, Inc. (''NYSE Market'') and NYSE Regulation, Inc. (''NYSE Regulation'' and, together, the ''Regulated Subsidiaries'').[3] In addition, the Exchange proposes to amend the Amended and Restated Bylaws of NYSE Euronext, the Amended and Restated Bylaws of NYSE Market, Inc., Third Amended and Restated Bylaws of NYSE Regulation, Inc., the Third Amended and Restated Operating Agreement of New York Stock Exchange LLC and the Second Amended and Restated Operating Agreement of NYSE MKT LLC (collectively the ''Organizational Documents'') to make certain conforming changes described below. The text of the proposed rule change is available on the Exchange's Web site at *www.nyse.com,* at the principal office of the Exchange, and at the Commission's Public Reference Room.

II. Self-Regulatory Organization's Statement of the Purpose of, and Statutory Basis for, the Proposed Rule Change

In its filing with the Commission, the Exchange included statements concerning the purpose of, and basis for, the proposed rule change and discussed any comments it received on the proposed rule change. The text of those statements may be examined at the places specified in Item IV below. The Exchange has prepared summaries, set forth in sections A, B and C below, of the most significant parts of such statements.

A. Self-Regulatory Organization's Statement of the Purpose of, and Statutory Basis for, the Proposed Rule Change

1. Purpose

The purpose of this rule filing is to amend the NYSE Euronext Director Independence Policy, create the Subsidiary Director Independence Policy for the boards of directors of the Regulated Subsidiaries, and make certain conforming changes to the Organizational Documents, as set forth below.

NYSE Euronext Director Independence Policy

Under the Proposed Rule Change, the NYSE Euronext Director Independence Policy would be amended to reflect the following changes (the ''Proposed Amendments''):

(i) A majority (as opposed to 75%) of the board of directors of NYSE Euronext (the ''Board'') would be required to be independent;

(ii) Executive officers of listed companies would no longer be prohibited from being considered independent for purposes of the Board;

(iii) The ''additional independence requirements'' at the end of the current NYSE Euronext Director Independence

---

[31] 17 CFR 200.30–3(a)(12).

[1] 15 U.S.C. 78s(b)(1).

[2] 17 CFR 240.19b–4.

[3] NYSE MKT and NYSE Arca, Inc. (''NYSE Arca'') are filing substantially the same proposed rule change.

Policy—which provide that executive officers of foreign private issuers, executive officers of NYSE Euronext and directors of affiliates of member organizations must together comprise no more than a minority of the total Board—would be eliminated;

(iv) References to certain European regulatory authorities would be updated, because their names have changed;

(v) References to NYSE Alternext US LLC and NYSE Amex LLC would refer instead to NYSE MKT LLC, because of this entity's previous name changes; and

(vi) Footnote 2 would be deleted because the NYSE Euronext Director Independence Policy would not be applicable to the Regulated Subsidiaries, each of which is proposed to have its own director independence policy.

The Commission previously considered and approved these aspects of the director independence policy in connection with the previously proposed combination of NYSE Euronext and Deutsche Börse AG (the ''Combination'').[4] Under the rule change approved in connection with the Combination, Alpha Beta Netherlands Holding N.V. (''Holdco'')—which was the holding company formed in connection with the Combination that would have become the parent company of NYSE Euronext—would have adopted a director independence policy that was substantially similar to the current NYSE Euronext Director Independence Policy, except for the Proposed Amendments noted above and except for certain references to the independence standards and criteria in the Dutch Corporate Governance Code that would be added, given that Holdco was formed under and subject to the laws of the Netherlands. Upon consummation of the Combination, the NYSE Euronext Director Independence Policy would have ceased to apply. On February 2, 2012, following the European Commission's decision to prohibit the Combination, NYSE Euronext and Deutsche Börse agreed to terminate the agreement to combine their businesses.

The Exchange explained the reasons for incorporating the Proposed Amendments in Holdco's director independence policy and believes the rationale for making these amendments is substantially applicable with equal force to the NYSE Euronext Director Independence Policy.

Summarized below are the principal reasons for the Proposed Amendments listed in items (i), (ii) and (iii) above. The Exchange believes that the Proposed Amendments listed in items (iv), (v) and (vi) above are self-explanatory and technical in nature.

Majority Independence Requirement

The Exchange believes that a majority independence standard is appropriate to ensure that the Board as a whole consists of individuals with independent, objective perspectives, while at the same time affording NYSE Euronext sufficient flexibility to include persons with expertise and qualifications that will contribute meaningfully to the Board's performance of its oversight function. The importance of allowing highly qualified individuals to serve on the Board is underscored by the fact that NYSE Euronext serves as the holding company for a complex, global business with highly specialized operations and regulatory functions.

Although NYSE Euronext has unique responsibilities and functions as the holding company for several regulated subsidiaries, it is subject to various corporate governance and regulatory obligations that are addressed by means of ownership and voting limitations on its shareholders, commitments to provide access to its books and records and to submit to the jurisdiction of the Commission, director qualification requirements and other undertakings.

The Exchange submits that some of these undertakings call for in-depth industry knowledge and expertise on the Board, such as the requirement that NYSE Euronext directors take into consideration the effect that NYSE Euronext's actions would have on the ability of its U.S. regulated subsidiaries to (i) foster cooperation and coordination with persons engaging in regulating, clearing, settling and processing information with respect to, and facilitating transactions in securities, and (ii) remove impediments to and perfect the mechanisms of a free and open market in securities and a U.S. national securities market system.

Executives of Listed Companies

The Exchange believes that a per se disqualification of listed company executives from being deemed independent should not be applicable to NYSE Euronext. The per se disqualification was initially adopted by the New York Stock Exchange, Inc. in early 2005 in the context of its unique circumstances and history and its management structure and board composition at that time.[5] The Exchange submits that those circumstances are no longer applicable, and the disqualification of listed company executives tends to undermine rather than facilitate NYSE Euronext's efforts to ensure a qualified and balanced board composition and promote various other important corporate governance objectives, such as ensuring appropriate expertise and experience on the Board, as well as representation of the interests of a diverse range of market constituencies and local European and U.S. interests. A per se disqualification narrows the pool of potential NYSE Euronext director candidates and arbitrarily eliminates from consideration a large number of highly qualified, experienced individuals who have proven track records as business leaders. Under the NYSE Euronext Director Independence Policy, the Board would still need to assess whether a listed company executive meets the various independence criteria, including whether he or she has any ''material relationship'' with NYSE Euronext and its subsidiaries.

Furthermore, the Exchange believes that the objectivity of Board members is adequately protected by the various other independence criteria in the NYSE Euronext Director Independence Policy, such as the requirement that independent directors may not be or have been within the last year, and may not have an immediate family member who is or within the last year was, a member of the Exchange, NYSE Arca or NYSE MKT. In addition, if and to the extent that a matter concerning a listed company whose executive is a NYSE Euronext director were ever to come before the Board for consideration, such director would be required to be recused from acting on such matter pursuant to the Board's conflicts of interest policy.

Additional Independence Requirements

Finally, the NYSE Euronext Director Independence Policy provides that the sum of (i) executive officers of foreign private issuers, (ii) executive officers of NYSE Euronext and (iii) directors of affiliates of ''members'' (as defined in Sections 3(a)(A)(3)(ii), 3(a)(A)(3)(iii) and 3(a)(A)(3)(iv) of the Exchange Act[6]) of the Exchange, NYSE Arca or NYSE MKT, may not constitute more than a minority of the total number of directors of NYSE Euronext. The purpose of this requirement is to ensure that, although executives of listed companies who are

[4] *See* Securities Exchange Act Release No. 34–66171 (January 17, 2012) File Nos. SR–EDGA–2011–34; SR–EDGX–2011–33; SR–ISE–2011–69; SR–NYSE–2011–51; SR–NYSEAmex–2011–78; SR–NYSEArca–2011–72), 77 FR 3297.

[5] *See* Securities Exchange Act Release No. 34–51217 (February 16, 2005) (File No. SR–NYSE–2004–54), 70 FR 9688.

[6] 15 U.S.C. 78c.

foreign private issuers are not disqualified from serving on the Board, such executives may not, together with NYSE Euronext executives and directors of affiliates of members, constitute more than a minority of the Board. In light of the Exchange's proposal to eliminate the disqualification of listed company executives from the NYSE Euronext Director Independence Policy, this requirement would serve no purpose because the exception to such disqualification for foreign private issuer executives would also be eliminated. The Exchange further notes that under the proposed NYSE Euronext Director Independence Policy, executives of NYSE Euronext and directors of affiliates of exchange members would not be deemed independent and, accordingly, could not in any event constitute more than a minority of the Board.

Subsidiary Director Independence Policy

Currently, the independent directors of the Regulated Subsidiaries must satisfy the requirements of the NYSE Euronext Director Independence Policy. Under the Proposed Rule Change, each of the Regulated Subsidiaries would have its own independence policy in the form of the Subsidiary Director Independence Policy attached as Exhibit 5B to the Proposed Rule Change, in lieu of the NYSE Euronext Director Independence Policy.

The Commission previously considered and approved this form of Subsidiary Director Independence Policy to be adopted by the Regulated Subsidiaries in connection with the previously proposed Combination (except that the prior form contained certain references to Holdco that have been replaced in Exhibit 5B with references to NYSE Euronext). The Exchange explained the reasons for creating the Subsidiary Director Independence Policy to determine the independence of directors of the Regulated Subsidiaries, and believes these reasons (as set forth below) continue to be applicable.

The Subsidiary Director Independence Policy is substantially similar to the current NYSE Euronext Director Independence Policy, except for the following changes:

(i) References to NYSE Euronext would refer instead to the relevant Regulated Subsidiary;

(ii) The requirement that at least three-fourths of the directors must be independent would be deleted, since the organizational documents of the Regulated Subsidiaries contain the independence and other qualification requirements for directors;

(iii) The requirement in the NYSE Euronext Director Independence Policy that the board consider the special responsibilities of a director in light of NYSE Euronext's ownership of U.S. regulated subsidiaries and European regulated entities would be deleted, because unlike NYSE Euronext, the Regulated Subsidiaries are not holding companies;

(iv) The requirement for directors to inform the Chairman of the Nominating and Governance Committee of certain relationships and interests would be deleted, since the boards of the Regulated Subsidiaries do not have a Nominating and Governance Committee, except that in the Subsidiary Director Independence Policy to be adopted by NYSE Regulation, this provision would reference the Nominating and Governance Committee of NYSE Regulation;

(v) References to NYSE Alternext US LLC and NYSE Amex LLC would refer instead to NYSE MKT LLC, because of this entity's previous name changes;

(vi) Because the NYSE Euronext Director Independence Policy provides that a director of an affiliate of a ''Member Organization'' cannot qualify as an independent director of these Regulated Subsidiaries, the conflicting language stating that a director of an affiliate of a ''Member Organization'' shall not per se fail to be independent would be deleted;

(vii) Because language in the NYSE Euronext Director Independence Policy provides that an executive officer of an issuer whose securities are listed on a NYSE Exchange cannot qualify as an independent director of these Regulated Subsidiaries, the conflicting language providing an exception applicable only to NYSE Euronext directors would be deleted; and

(viii) The ''additional independence requirements'' at the end of the current Independence Policy of NYSE Euronext, which provides that executive officers of foreign private issuers, executive officers of NYSE Euronext and directors of affiliates of member organizations must together comprise no more than a minority of the total board, would be eliminated. This provision is designed to ensure that although persons who are directors of an affiliate of a Member Organization or who are executive officers of a ''foreign private issuer'' listed on a NYSE Exchange may in some circumstances qualify as independent for purposes of NYSE Euronext board membership, such persons may not, together with executive officers of NYSE Euronext, constitute more than a minority of the total NYSE Euronext directors. Under the proposed Subsidiary Director Independence Policy, such persons could not be deemed to be independent directors of the relevant Regulated Subsidiary and, accordingly, this limitation on the number of such persons who may serve on the board is unnecessary.

The Exchange believes that adopting a separate director independence policy for the Regulated Subsidiaries that is more tailored to their specific requirements—rather than applying the NYSE Euronext Director Independence Policy with various carve-outs and exceptions noted therein for the Regulated Subsidiaries—will add clarity to the Exchange's rules.

Proposed Conforming Modifications to Organizational Documents

The Organizational Documents would be modified to reflect the changes indicated in Exhibits 5C through 5G, which are summarized as follows:

(i) References in the Amended and Restated Bylaws of NYSE Market, Inc., the Third Amended and Restated Bylaws of NYSE Regulation, Inc., the Third Amended and Restated Operating Agreement of New York Stock Exchange LLC and the Second Amended and Restated Operating Agreement of NYSE MKT LLC would be modified to refer to the applicable Subsidiary Director Independence Policy rather than to the NYSE Euronext Director Independence Policy;

(ii) References to NYSE Alternext US LLC and NYSE Amex LLC in such Organizational Documents would be amended to refer instead to NYSE MKT LLC, because of this entity's previous name changes; and

(iii) Section 3.4 of the Amended and Restated Bylaws of NYSE Euronext would be modified to provide that a majority (rather than three-fourths) of the Board members would be required to be independent.

2. Statutory Basis

The Exchange believes that this filing is consistent with Section 6(b) [7] of the Exchange Act in general, and furthers the objectives of Section 6(b)(1) [8] in particular, in that it enables the Exchange to be so organized as to have the capacity to be able to carry out the purposes of the Exchange Act and to comply with the provisions of the Exchange Act, the rules and regulations thereunder, and the rules of the Exchange. The Proposed Rule Change

[7] 15 U.S.C. 78(f)(b).

[8] 15 U.S.C. 78(f)(b)(1).

will help to ensure that the boards of directors of NYSE Euronext and the Regulated Subsidiaries consist of individuals with independent, objective perspectives, while at the same time affording them sufficient flexibility to include persons with expertise and qualifications that will contribute meaningfully to these boards' performance of their oversight and other functions. For example, some responsibilities of these boards call for in-depth industry knowledge and expertise on the Board, such as the requirement that NYSE Euronext directors take into consideration the effect that NYSE Euronext's actions would have on the ability of its U.S. regulated subsidiaries to (i) foster cooperation and coordination with persons engaging in regulating, clearing, settling and processing information with respect to, and facilitating transactions in securities, and (ii) remove impediments to and perfect the mechanisms of a free and open market in securities and a U.S. national securities market system. The Exchange also believes that adopting a separate director independence policy for the Regulated Subsidiaries that is more tailored to their specific requirements—rather than applying the NYSE Euronext Director Independence Policy with various carve-outs and exceptions noted therein for the Regulated Subsidiaries—will add clarity to the Exchange's rules.

B. Self-Regulatory Organization's Statement on Burden on Competition

The Exchange does not believe that the Proposed Rule Change will impose any burden on competition that is not necessary or appropriate in furtherance of the purposes of the Exchange Act.

C. Self-Regulatory Organization's Statement on Comments on the Proposed Rule Change Received From Members, Participants, or Others

The Exchange has neither solicited nor received written comments on the Proposed Rule Change.

III. Date of Effectiveness of the Proposed Rule Change and Timing for Commission Action

Within 45 days of the date of publication of this notice in the **Federal Register** or within such longer period (i) as the Commission may designate up to 90 days of such date if it finds such longer period to be appropriate and publishes its reasons for so finding or (ii) as to which the self-regulatory organization consents, the Commission will:

A. By order approve or disapprove such proposed rule change; or

B. institute proceedings to determine whether the proposed rule change should be disapproved.

IV. Solicitation of Comments

Interested persons are invited to submit written data, views, and arguments concerning the foregoing, including whether the proposed rule change is consistent with the Act. Comments may be submitted by any of the following methods:

Electronic Comments

- Use the Commission's Internet comment form (*http://www.sec.gov/rules/sro.shtml*); or
- Send an email to *rule-comments@sec.gov*. Please include File Number SR–NYSE–2012–17 on the subject line.

Paper Comments

- Send paper comments in triplicate to Elizabeth M. Murphy, Secretary, Securities and Exchange Commission, 100 F Street NE., Washington, DC 20549–1090.

All submissions should refer to File Number SR–NYSE–2012–17. This file number should be included on the subject line if email is used. To help the Commission process and review your comments more efficiently, please use only one method. The Commission will post all comments on the Commission's Internet Web site (*http://www.sec.gov/rules/sro.shtml*). Copies of the submission, all subsequent amendments, all written statements with respect to the proposed rule change that are filed with the Commission, and all written communications relating to the proposed rule change between the Commission and any person, other than those that may be withheld from the public in accordance with the provisions of 5 U.S.C. 552, will be available for Web site viewing and printing in the Commission's Public Reference Room, 100 F Street NE., Washington, DC 20549, on official business days between the hours of 10:00 a.m. and 3:00 p.m. Copies of the filing also will be available for inspection and copying at the principal office of the Exchange. All comments received will be posted without change; the Commission does not edit personal identifying information from submissions. You should submit only information that you wish to make available publicly. All submissions should refer to File Number SR–NYSE–2012–17 and should be submitted on or before July 9, 2012.

For the Commission, by the Division of Trading and Markets, pursuant to delegated authority. [9]

Kevin M. O'Neill,

Deputy Secretary.

[FR Doc. 2012–14757 Filed 6–15–12; 8:45 am]

BILLING CODE 8011–01–P

SECURITIES AND EXCHANGE COMMISSION

[Release No. 34–67184; File No. SR–NYSEMKT–2012–07]

Self-Regulatory Organizations; NYSE MKT LLC; Notice of Filing of Proposed Rule Change Amending Independence Policy of the Board of Directors of NYSE Euronext and Creating New Independence Policy for Boards of Directors of the New York Stock Exchange LLC, NYSE MKT LLC, NYSE Regulation, Inc. and NYSE Market, Inc.

June 12, 2012.

Pursuant to Section 19(b)(1) of the Securities Exchange Act of 1934 (''Act'') [1] and Rule 19b–4 thereunder,[2] notice is hereby given that on June 8, 2012, NYSE MKT LLC (''NYSE MKT'') filed with the Securities and Exchange Commission (''Commission'') the proposed rule change as described in Items I and II below, which Items have been prepared by the NYSE MKT. The Commission is publishing this notice to solicit comments on the proposed rule change from interested persons.

I. Self-Regulatory Organization's Statement of the Terms of Substance of the Proposed Rule Change

NYSE MKT proposes to amend the Independence Policy of the Board of Directors of NYSE Euronext (the ''NYSE Euronext Director Independence Policy'') and create a new independence policy (the ''Subsidiary Director Independence Policy'') for the boards of directors of NYSE MKT, New York Stock Exchange LLC (''the Exchange''), NYSE Market, Inc. (''NYSE Market'') and NYSE Regulation, Inc. (''NYSE Regulation'' and, together, the ''Regulated Subsidiaries'').[3] In addition, NYSE MKT proposes to amend the Amended and Restated Bylaws of NYSE Euronext, the Amended and Restated Bylaws of NYSE Market, Inc., Third Amended and Restated Bylaws of NYSE Regulation, Inc., the Third Amended and Restated Operating Agreement of New York Stock Exchange LLC and the

[9] 17 CFR 200.30–3(a)(12).

[1] 15 U.S.C. 78s(b)(1).

[2] 17 CFR 240.19b–4.

[3] The Exchange and NYSE Arca, Inc. (''NYSE Arca'') are filing substantially the same proposed rule change.

Second Amended and Restated Operating Agreement of NYSE MKT LLC (collectively the ''Organizational Documents'') to make certain conforming changes described below. The text of the proposed rule change is available on the Exchange's Web site at *www.nyse.com,* at the principal office of the Exchange, and at the Commission's Public Reference Room.

II. Self-Regulatory Organization's Statement of the Purpose of, and Statutory Basis for, the Proposed Rule Change

In its filing with the Commission, NYSE MKT included statements concerning the purpose of, and basis for, the proposed rule change and discussed any comments it received on the proposed rule change. The text of those statements may be examined at the places specified in Item IV below. NYSE MKT has prepared summaries, set forth in sections A, B and C below, of the most significant parts of such statements.

A. Self-Regulatory Organization's Statement of the Purpose of, and Statutory Basis for, the Proposed Rule Change

1. Purpose

The purpose of this rule filing is to amend the NYSE Euronext Director Independence Policy, create the Subsidiary Director Independence Policy for the boards of directors of the Regulated Subsidiaries, and make certain conforming changes to the Organizational Documents, as set forth below.

NYSE Euronext Director Independence Policy

Under the Proposed Rule Change, the NYSE Euronext Director Independence Policy would be amended to reflect the following changes (the ''Proposed Amendments''):

(i) A majority (as opposed to 75%) of the board of directors of NYSE Euronext (the ''Board'') would be required to be independent;

(ii) Executive officers of listed companies would no longer be prohibited from being considered independent for purposes of the Board;

(iii) The ''additional independence requirements'' at the end of the current NYSE Euronext Director Independence Policy—which provide that executive officers of foreign private issuers, executive officers of NYSE Euronext and directors of affiliates of member organizations must together comprise no more than a minority of the total Board—would be eliminated;

(iv) References to certain European regulatory authorities would be updated, because their names have changed;

(v) References to NYSE Alternext US LLC and NYSE Amex LLC would refer instead to NYSE MKT LLC, because of this entity's previous name changes; and

(vi) Footnote 2 would be deleted because the NYSE Euronext Director Independence Policy would not be applicable to the Regulated Subsidiaries, each of which is proposed to have its own director independence policy.

The Commission previously considered and approved these aspects of the director independence policy in connection with the previously proposed combination of NYSE Euronext and Deutsche Börse AG (the ''Combination'').[4] Under the rule change approved in connection with the Combination, Alpha Beta Netherlands Holding N.V. (''Holdco'')—which was the holding company formed in connection with the Combination that would have become the parent company of NYSE Euronext—would have adopted a director independence policy that was substantially similar to the current NYSE Euronext Director Independence Policy, except for the Proposed Amendments noted above and except for certain references to the independence standards and criteria in the Dutch Corporate Governance Code that would be added, given that Holdco was formed under and subject to the laws of the Netherlands. Upon consummation of the Combination, the NYSE Euronext Director Independence Policy would have ceased to apply. On February 2, 2012, following the European Commission's decision to prohibit the Combination, NYSE Euronext and Deutsche Börse agreed to terminate the agreement to combine their businesses.

NYSE MKT explained the reasons for incorporating the Proposed Amendments in Holdco's director independence policy and believes the rationale for making these amendments is substantially applicable with equal force to the NYSE Euronext Director Independence Policy.

Summarized below are the principal reasons for the Proposed Amendments listed in items (i), (ii) and (iii) above. NYSE MKT believes that the Proposed Amendments listed in items (iv), (v) and (vi) above are self-explanatory and technical in nature.

Majority Independence Requirement

NYSE MKT believes that a majority independence standard is appropriate to ensure that the Board as a whole consists of individuals with independent, objective perspectives, while at the same time affording NYSE Euronext sufficient flexibility to include persons with expertise and qualifications that will contribute meaningfully to the Board's performance of its oversight function. The importance of allowing highly qualified individuals to serve on the Board is underscored by the fact that NYSE Euronext serves as the holding company for a complex, global business with highly specialized operations and regulatory functions.

Although NYSE Euronext has unique responsibilities and functions as the holding company for several regulated subsidiaries, it is subject to various corporate governance and regulatory obligations that are addressed by means of ownership and voting limitations on its shareholders, commitments to provide access to its books and records and to submit to the jurisdiction of the Commission, director qualification requirements and other undertakings.

NYSE MKT submits that some of these undertakings call for in-depth industry knowledge and expertise on the Board, such as the requirement that NYSE Euronext directors take into consideration the effect that NYSE Euronext's actions would have on the ability of its U.S. regulated subsidiaries to (i) foster cooperation and coordination with persons engaging in regulating, clearing, settling and processing information with respect to, and facilitating transactions in securities, and (ii) remove impediments to and perfect the mechanisms of a free and open market in securities and a U.S. national securities market system.

Executives of Listed Companies

NYSE MKT believes that a per se disqualification of listed company executives from being deemed independent should not be applicable to NYSE Euronext. The per se disqualification was initially adopted by the New York Stock Exchange, Inc. in early 2005 in the context of its unique circumstances and history and its management structure and board composition at that time.[5] NYSE MKT submits that those circumstances are no longer applicable, and the disqualification of listed company executives tends to undermine rather

[4] *See* Securities Exchange Act Release No. 34–66171 (January 17, 2012) File Nos. SR–EDGA–2011–34; SR–EDGX–2011–33; SR–ISE–2011–69; SR–NYSE–2011–51; SR–NYSEAmex-2011–78; SR–NYSEArca-2011–72), 77 FR 3297.

[5] *See* Securities Exchange Act Release No. 34–51217 (February 16, 2005) (File No. SR–NYSE–2004–54), 70 FR 9688.

than facilitate NYSE Euronext's efforts to ensure a qualified and balanced board composition and promote various other important corporate governance objectives, such as ensuring appropriate expertise and experience on the Board, as well as representation of the interests of a diverse range of market constituencies and local European and U.S. interests. A per se disqualification narrows the pool of potential NYSE Euronext director candidates and arbitrarily eliminates from consideration a large number of highly qualified, experienced individuals who have proven track records as business leaders. Under the NYSE Euronext Director Independence Policy, the Board would still need to assess whether a listed company executive meets the various independence criteria, including whether he or she has any ''material relationship'' with NYSE Euronext and its subsidiaries.

Furthermore, NYSE MKT believes that the objectivity of Board members is adequately protected by the various other independence criteria in the NYSE Euronext Director Independence Policy, such as the requirement that independent directors may not be or have been within the last year, and may not have an immediate family member who is or within the last year was, a member of NYSE MKT, the Exchange or NYSE Arca. In addition, if and to the extent that a matter concerning a listed company whose executive is a NYSE Euronext director were ever to come before the Board for consideration, such director would be required to be recused from acting on such matter pursuant to the Board's conflicts of interest policy.

Additional Independence Requirements

Finally, the NYSE Euronext Director Independence Policy provides that the sum of (i) Executive officers of foreign private issuers, (ii) executive officers of NYSE Euronext and (iii) directors of affiliates of ''members'' (as defined in Sections 3(a)(A)(3)(ii), 3(a)(A)(3)(iii) and 3(a)(A)(3)(iv) of the Exchange Act [6]) of NYSE MKT, the Exchange or NYSE Arca, may not constitute more than a minority of the total number of directors of NYSE Euronext. The purpose of this requirement is to ensure that, although executives of listed companies who are foreign private issuers are not disqualified from serving on the Board, such executives may not, together with NYSE Euronext executives and directors of affiliates of members, constitute more than a minority of the Board. In light of NYSE MKT's proposal to eliminate the disqualification of listed company executives from the NYSE Euronext Director Independence Policy, this requirement would serve no purpose because the exception to such disqualification for foreign private issuer executives would also be eliminated. NYSE MKT further notes that under the proposed NYSE Euronext Director Independence Policy, executives of NYSE Euronext and directors of affiliates of exchange members would not be deemed independent and, accordingly, could not in any event constitute more than a minority of the Board.

Subsidiary Director Independence Policy

Currently, the independent directors of the Regulated Subsidiaries must satisfy the requirements of the NYSE Euronext Director Independence Policy. Under the Proposed Rule Change, each of the Regulated Subsidiaries would have its own independence policy in the form of the Subsidiary Director Independence Policy attached as Exhibit 5B to the Proposed Rule Change, in lieu of the NYSE Euronext Director Independence Policy.

The Commission previously considered and approved this form of Subsidiary Director Independence Policy to be adopted by the Regulated Subsidiaries in connection with the previously proposed Combination (except that the prior form contained certain references to Holdco that have been replaced in Exhibit 5B with references to NYSE Euronext). NYSE MKT explained the reasons for creating the Subsidiary Director Independence Policy to determine the independence of directors of the Regulated Subsidiaries, and believes these reasons (as set forth below) continue to be applicable.

The Subsidiary Director Independence Policy is substantially similar to the current NYSE Euronext Director Independence Policy, except for the following changes:

(i) References to NYSE Euronext would refer instead to the relevant Regulated Subsidiary;

(ii) The requirement that at least three-fourths of the directors must be independent would be deleted, since the organizational documents of the Regulated Subsidiaries contain the independence and other qualification requirements for directors;

(iii) The requirement in the NYSE Euronext Director Independence Policy that the board consider the special responsibilities of a director in light of NYSE Euronext's ownership of U.S. regulated subsidiaries and European regulated entities would be deleted, because unlike NYSE Euronext, the Regulated Subsidiaries are not holding companies;

(iv) The requirement for directors to inform the Chairman of the Nominating and Governance Committee of certain relationships and interests would be deleted, since the boards of the Regulated Subsidiaries do not have a Nominating and Governance Committee, except that in the Subsidiary Director Independence Policy to be adopted by NYSE Regulation, this provision would reference the Nominating and Governance Committee of NYSE Regulation;

(v) References to NYSE Alternext US LLC and NYSE Amex LLC would refer instead to NYSE MKT LLC, because of this entity's previous name changes;

(vi) Because the NYSE Euronext Director Independence Policy provides that a director of an affiliate of a ''Member Organization'' cannot qualify as an independent director of these Regulated Subsidiaries, the conflicting language stating that a director of an affiliate of a ''Member Organization'' shall not per se fail to be independent would be deleted;

(vii) Because language in the NYSE Euronext Director Independence Policy provides that an executive officer of an issuer whose securities are listed on a NYSE Exchange cannot qualify as an independent director of these Regulated Subsidiaries, the conflicting language providing an exception applicable only to NYSE Euronext directors would be deleted; and

(viii) The ''additional independence requirements'' at the end of the current Independence Policy of NYSE Euronext, which provides that executive officers of foreign private issuers, executive officers of NYSE Euronext and directors of affiliates of member organizations must together comprise no more than a minority of the total board, would be eliminated. This provision is designed to ensure that although persons who are directors of an affiliate of a Member Organization or who are executive officers of a ''foreign private issuer'' listed on a NYSE Exchange may in some circumstances qualify as independent for purposes of NYSE Euronext board membership, such persons may not, together with executive officers of NYSE Euronext, constitute more than a minority of the total NYSE Euronext directors. Under the proposed Subsidiary Director Independence Policy, such persons could not be deemed to be independent directors of the relevant Regulated Subsidiary and, accordingly, this limitation on the number of such persons who may serve on the board is unnecessary.

[6] 15 U.S.C. 78c.

NYSE MKT believes that adopting a separate director independence policy for the Regulated Subsidiaries that is more tailored to their specific requirements—rather than applying the NYSE Euronext Director Independence Policy with various carve-outs and exceptions noted therein for the Regulated Subsidiaries—will add clarity to NYSE MKT's rules.

Proposed Conforming Modifications to Organizational Documents

The Organizational Documents would be modified to reflect the changes indicated in Exhibits 5C through 5G, which are summarized as follows:

(i) References in the Amended and Restated Bylaws of NYSE Market, Inc., the Third Amended and Restated Bylaws of NYSE Regulation, Inc., the Third Amended and Restated Operating Agreement of New York Stock Exchange LLC and the Second Amended and Restated Operating Agreement of NYSE MKT LLC would be modified to refer to the applicable Subsidiary Director Independence Policy rather than to the NYSE Euronext Director Independence Policy;

(ii) References to NYSE Alternext US LLC and NYSE Amex LLC in such Organizational Documents would be amended to refer instead to NYSE MKT LLC, because of this entity's previous name changes; and

(iii) Section 3.4 of the Amended and Restated Bylaws of NYSE Euronext would be modified to provide that a majority (rather than three-fourths) of the Board members would be required to be independent.

2. Statutory Basis

NYSE Euronext believes that this filing is consistent with Section 6(b) [7] of the Exchange Act in general, and furthers the objectives of Section 6(b)(1) [8] in particular, in that it enables NYSE MKT to be so organized as to have the capacity to be able to carry out the purposes of the Exchange Act and to comply with the provisions of the Exchange Act, the rules and regulations thereunder, and the rules of NYSE MKT. The Proposed Rule Change will help to ensure that the boards of directors of NYSE Euronext and the Regulated Subsidiaries consist of individuals with independent, objective perspectives, while at the same time affording them sufficient flexibility to include persons with expertise and qualifications that will contribute meaningfully to these boards' performance of their oversight and other functions. For example, some responsibilities of these boards call for in-depth industry knowledge and expertise on the Board, such as the requirement that NYSE Euronext directors take into consideration the effect that NYSE Euronext's actions would have on the ability of its U.S. regulated subsidiaries to (i) foster cooperation and coordination with persons engaging in regulating, clearing, settling and processing information with respect to, and facilitating transactions in securities, and (ii) remove impediments to and perfect the mechanisms of a free and open market in securities and a U.S. national securities market system. NYSE MKT also believes that adopting a separate director independence policy for the Regulated Subsidiaries that is more tailored to their specific requirements—rather than applying the NYSE Euronext Director Independence Policy with various carve-outs and exceptions noted therein for the Regulated Subsidiaries—will add clarity to NYSE MKT's rules.

B. Self-Regulatory Organization's Statement on Burden on Competition

NYSE MKT does not believe that the Proposed Rule Change will impose any burden on competition that is not necessary or appropriate in furtherance of the purposes of the Exchange Act.

C. Self-Regulatory Organization's Statement on Comments on the Proposed Rule Change Received From Members, Participants, or Others

NYSE MKT has neither solicited nor received written comments on the Proposed Rule Change.

III. Date of Effectiveness of the Proposed Rule Change and Timing for Commission Action

Within 45 days of the date of publication of this notice in the **Federal Register** or within such longer period (i) as the Commission may designate up to 90 days of such date if it finds such longer period to be appropriate and publishes its reasons for so finding or (ii) as to which the self-regulatory organization consents, the Commission will:

A. By order approve or disapprove such proposed rule change; or

B. Institute proceedings to determine whether the proposed rule change should be disapproved.

IV. Solicitation of Comments

Interested persons are invited to submit written data, views, and arguments concerning the foregoing, including whether the proposed rule change is consistent with the Act. Comments may be submitted by any of the following methods:

Electronic Comments

- Use the Commission's Internet comment form (*http://www.sec.gov/rules/sro.shtml*); or
- Send an email to *rule-comments@sec.gov.* Please include File Number SR–NYSEMKT–2012–07 on the subject line.

Paper Comments

- Send paper comments in triplicate to Elizabeth M. Murphy, Secretary, Securities and Exchange Commission, 100 F Street NE., Washington, DC 20549–1090.

All submissions should refer to File Number SR–NYSEMKT–2012–07. This file number should be included on the subject line if email is used. To help the Commission process and review your comments more efficiently, please use only one method. The Commission will post all comments on the Commission's Internet Web site (*http://www.sec.gov/rules/sro.shtml*). Copies of the submission, all subsequent amendments, all written statements with respect to the proposed rule change that are filed with the Commission, and all written communications relating to the proposed rule change between the Commission and any person, other than those that may be withheld from the public in accordance with the provisions of 5 U.S.C. 552, will be available for Web site viewing and printing in the Commission's Public Reference Room, 100 F Street NE., Washington, DC 20549, on official business days between the hours of 10:00 a.m. and 3:00 p.m. Copies of the filing also will be available for inspection and copying at the principal office of NYSE MKT. All comments received will be posted without change; the Commission does not edit personal identifying information from submissions. You should submit only information that you wish to make available publicly. All submissions should refer to File Number SR–NYSEMKT–2012–07 and should be submitted on or before July 9, 2012.

For the Commission, by the Division of Trading and Markets, pursuant to delegated authority. [9]

Kevin M. O'Neill,

Deputy Secretary.

[FR Doc. 2012–14756 Filed 6–15–12; 8:45 am]

BILLING CODE 8011–01–P

[7] 15 U.S.C. 78(f)(b).

[8] 15 U.S.C. 78(f)(b)(1).

[9] 17 CFR 200.30–3(a)(12).

OFFICE OF SPECIAL COUNSEL

Agency Information Collection Activities; Request for Comment

AGENCY: Office of Special Counsel.

ACTION: Notice.

SUMMARY: In accordance with the Paperwork Reduction Act of 1995 (44 U.S.C. Chapter 35), and implementing regulations at 5 CFR part 1320, the U.S. Office of Special Counsel (OSC) is requesting approval from the Office of Management and Budget (OMB) to use four previously approved information collections consisting of three forms for filing complaints and disclosures of information, and an electronic survey form. These collections are listed below. The current OMB approval for Forms OSC–11, OSC–12, OSC–13, and the OSC Survey expires 9/30/12. We are submitting all three forms and the electronic survey for renewal. This will be a reinstatement of the forms, with changes to the Privacy Act Statement for the three forms for filing complaints and disclosures of information and the Consent Statement for Form OSC–12. Current and former Federal employees, employee representatives, other Federal agencies, state and local government employees, and the general public are invited to comment on these information collections for the final time. Comments are invited on: (a) Whether the proposed collection of information is necessary for the proper performance of OSC functions, including whether the information will have practical utility; (b) the accuracy of OSC's estimate of the burden of the proposed collections of information; (c) ways to enhance the quality, utility, and clarity of the information to be collected; and (d) ways to minimize the burden of the collection of information on respondents, including through the use of automated collection techniques or other forms of information technology.

Notice and request for public comment on these forms was published in the **Federal Register** on April 16, 2012 at 77 FR 22614 and on May 15, 2012 at 77 FR 28638.

DATES: Comments should be received on or before July 26, 2012.

ADDRESSES: Comments should be sent to the Office of Information and Regulatory Affairs at the Office of Management and Budget, 725 Seventeenth Street NW., Attention: Desk Officer for U.S. Office of Special Counsel, Washington, DC 20503. A copy of any comments should be sent to Karl Kammann, Director of Finance, U.S. Office of Special Counsel, 1730 M Street NW., Suite 218, Washington, DC 20036–4505.

FOR FURTHER INFORMATION CONTACT: Karl Kammann, Director of Finance, either at the address shown above, or by facsimile at (202) 254–3711.

SUPPLEMENTARY INFORMATION: OSC is an independent agency responsible for, among other things, (1) the investigation and prosecution of allegations of prohibited personnel practices defined by law at 5 U.S.C. 2302(b), including protection of whistleblowers, and certain other illegal employment practices under titles 5 and 38 of the U.S. Code affecting current or former Federal employees or applicants for employment, and covered state and local government employees; (2) providing a safe and secure channel for considering whistleblower disclosures; and (3) the interpretation and enforcement of Hatch Act provisions on political activity in chapters 15 and 73 of title 5 of the U.S. Code. OSC is also required to conduct an annual survey of individuals who seek its assistance. Section 13 of Public Law 103–424 (1994), codified at 5 U.S.C. 1212 note, states, in part: ''[T]he survey shall—(1) determine if the individual seeking assistance was fully apprised of their rights; (2) determine whether the individual was successful either at the Office of Special Counsel or the Merit Systems Protection Board; and (3) determine if the individual, whether successful or not, was satisfied with the treatment received from the Office of Special Counsel.'' The same section also provides that survey results are to be published in OSC's annual report to Congress. Copies of prior years' annual reports are available on OSC's Web site, at *http://www.osc.gov/RR_AnnualReportsToCongress.htm,* or by calling OSC at (202) 254–3600.

Copies of the OSC Forms 11, 12, and 13 can be found at: *http://www.osc.gov/RR_OSCFORMS.htm* The survey form for the collection of information is available for review by writing to the point of contact at OSC listed above.

Title of Collections: (1) Form OSC–11 (Complaint of Possible Prohibited Personnel Practice of Other Prohibited Activity) OMB control number 3255–0002; (2) Form OSC–12 (Information about filing a Whistleblower Disclosure with the Office of Special Counsel), OMB control number 3255–0002; (3) Form OSC–13 (Complaint of Possible Prohibited Political Activity (Violation of the Hatch Act)), OMB control number 3255–0002; (4) Office of Special Counsel (OSC) Annual Survey; OMB control number 3255–0003; all four with expiration date of 09/30/12.

Summary of the Collection of Information. OSC is seeking approval of its annual electronic survey, and its three previously approved forms for filing complaints and disclosures of information, that expire on September 30, 2012, with revision of the Privacy Act System of Records Notice applicable to Forms OSC–11, OSC–12 and OSC–13, to reflect new and revised routine uses. *See* **Federal Register** Notice at 78 FR 24242 (April 23, 2012). The Consent Statement for Form OSC–12 is also revised.

Brief Description of Need for Information and Proposed Use. The OSC forms are used to enable our agency to: (1) Investigate allegations of prohibited personnel practices, (2) provide a safe, secure channel for whistleblower disclosures, and (3) enforce the Hatch Act. The survey is used by government employees and complainants whose cases with OSC were closed during the fiscal year and wish to give us feedback on the quality of our service.

Description of likely respondents, including estimated number of likely respondents and proposed frequency of response. Forms OSC–11 and OSC–12 are used by current and former Federal employees and applicants for Federal employment to submit allegations of possible prohibited personnel practices and whistleblower disclosures respectively. Form OSC–13 is used for the submission of Hatch Act complaints. The frequency of the use of the three forms, OSC–11, OSC–12, and OSC–13, is daily. The estimated number of respondents is 4,000. The survey form is voluntary and anonymous, and it is used to survey current and former Federal employees and applicants for Federal employment who have submitted allegations of possible prohibited personnel practices. The survey form also surveys complainants alleging Hatch Act violations, whose matter has been closed or otherwise resolved during the prior fiscal year, on their experience at OSC. Specifically, the survey asks questions relating to whether the respondent was: (1) Apprised of his or her rights; (2) successful at the OSC or at the Merit Systems Protection Board; and (3) satisfied with the treatment received at the OSC. The frequency of the use of this survey is annual, and the estimated number of respondents is 320 per year.

Estimate of total annual reporting and recordkeeping burden. The estimated average amount of time for a person to respond using the OSC forms is 55 minutes; the estimated annual burden for using the OSC forms is 3,666 hours. The estimated average amount of time

for a person to respond using the electronic survey is 12 minutes. The estimated annual survey burden is 64 hours.

Dated: June 12, 2012.

Mark Cohen,

Deputy Special Counsel.

[FR Doc. 2012–14726 Filed 6–15–12; 8:45 am]

BILLING CODE 7405–01–P

DEPARTMENT OF STATE

[Public Notice 7923]

Culturally Significant Objects Imported for Exhibition Determinations: ''Dead Sea Scrolls & The Bible Ancient Artifacts—Timeless Treasures''

SUMMARY: Notice is hereby given of the following determinations: Pursuant to the authority vested in me by the Act of October 19, 1965 (79 Stat. 985; 22 U.S.C. 2459), Executive Order 12047 of March 27, 1978, the Foreign Affairs Reform and Restructuring Act of 1998 (112 Stat. 2681, *et seq.;* 22 U.S.C. 6501 note, *et seq.*), Delegation of Authority No. 234 of October 1, 1999, Delegation of Authority No. 236–3 of August 28, 2000 (and, as appropriate, Delegation of Authority No. 257 of April 15, 2003), I hereby determine that the objects to be included in the exhibition ''Dead Sea Scrolls & The Bible Ancient Artifacts—Timeless Treasures'' imported from abroad for temporary exhibition within the United States, are of cultural significance. The objects are imported pursuant to loan agreements with the foreign owners or custodians. I also determine that the exhibition or display of the exhibit objects at the Southwestern Baptist Theological Seminary, Forth Worth, TX, from on or about July 2, 2012, until on or about January 13, 2013; and at possible additional exhibitions or venues yet to be determined, is in the national interest. I have ordered that Public Notice of these Determinations be published in the **Federal Register**.

FOR FURTHER INFORMATION CONTACT: For further information, including a list of the exhibit objects, contact Julie Simpson, Attorney-Adviser, Office of the Legal Adviser, U.S. Department of State (telephone: 202–632–6467). The mailing address is U.S. Department of State, SA–5, L/PD, Fifth Floor (Suite 5H03), Washington, DC 20522–0505.

Dated: June 13, 2012.

J. Adam Ereli,

Principal Deputy Assistant Secretary, Bureau of Educational and Cultural Affairs, Department of State.

[FR Doc. 2012–14832 Filed 6–15–12; 8:45 am]

BILLING CODE 4710–05–P

DEPARTMENT OF STATE

[Public Notice 7922]

Notice of Intent to Prepare an Environmental Impact Statement and Notice of Scoping Meeting

AGENCY: Department of State.

ACTION: Notice.

SUMMARY: In accordance with the National Environmental Policy Act (NEPA), 42 U.S.C. 4321–4347, the Department of State (DOS) announces its intent to prepare an Environmental Impact Statement (EIS) and initiate the scoping process for the proposed agency action as specified below. The EIS will evaluate the impacts on the affected environment, including, but not limited to, socioeconomics, traffic and transportation, land use, historic and cultural resources, noise, air quality, environmental justice, and cumulative impacts.

DATES: A public Scoping Meeting will be held on July 19, 2012, from 7:00 p.m. to 9:00 p.m.to inform stakeholders about the project and to receive public comments, questions and concerns regarding the scope of the EIS. The Scoping Meeting will be held at the Tifereth Israel Congregation, Cherner Auditorium, 770 16th Street NW., Washington, DC 20012. The public comment period will run until August 10, 2012.

ADDRESSES: All comments and questions on the Scoping Meeting and EIS can be directed by email to *FMC.INFO@state.gov,* by telephone (202) 471–5032, or by mail to: Geoffrey Hunt, Department of State, A/OPR/RPM, HST Room 1264, Washington DC 20520–1264.

SUPPLEMENTARY INFORMATION:

Background: The mission of the Department of State (DOS), as the Federal executive agency responsible for international relations of the United States, is to shape and sustain a peaceful, prosperous, just, and democratic world and foster conditions for stability and progress for the benefit of the American people and people around the world. DOS has a number of domestic and international responsibilities associated with the establishment and operation of foreign missions in the United States. In this regard, DOS is responsible for assisting foreign missions with identifying properties on which they may locate and operate chanceries (commonly referred to as embassies) in the United States.

As one of the smallest capital cities in the world, the availability of adequate space for the construction and operation of modern chanceries by foreign missions has been a longstanding challenge in the District of Columbia. In response, pursuant to the International Chancery Act of 1968, Congress authorized DOS to undertake the development of the International Chancery Center (ICC), located near the intersection of Connecticut Avenue and Van Ness Street NW. The ICC has successfully allowed foreign missions to locate their chanceries in a purpose-built community, which was designed to both address the modern needs of such operations, as well as to mitigate to the extent possible negative impacts such facilities may have, or be perceived to have, with respect to neighboring properties and citizens. The ICC has proven to be a highly successful model for balancing the Federal government's need to accommodate foreign missions with the concerns of local citizens about the location and operation of foreign chanceries in the District of Columbia. Because all lots within the ICC are fully assigned, DOS is considering establishing a second location for a similar development.

Proposed Action: The proposed action is to prepare a Master Plan for the long-term development of a Foreign Missions Center on approximately 43.5 acres of the former Walter Reed Army Medical Center (WRAMC) site, located at 16th Street NW., between Aspen Street and Alaska Avenue in Washington, DC. The proposed action includes long-term leases of Federal land to foreign governments for the purpose of constructing and operating new chancery facilities. The term ''chancery'' in this context means the principal offices of a foreign mission (as defined in the Foreign Missions Act) used for diplomatic or related purposes, and any annexes to these offices or support facilities, and includes the site and any buildings on the site. After several years of considering the suitability of other locations throughout the District, the DOS has concluded that the former WRAMC site presents a viable option for undertaking a development of similar size and scale to the existing ICC. The proposed action would be developed in phases and is expected to accommodate several foreign missions

and may have a small U.S. government building.

Cooperating Agencies: The Department of the Army will be requested to participate as a cooperating Federal agency for the EIS.

Public Participation: There will be a public scoping meeting on July 19, 2012, at 7:00 p.m. to 9:00 p.m. The Department of State and its consultants will present the proposed scope of the EIS analysis and will receive public comments at the scoping meeting. Written comments can be sent until August 10, 2012: by mail, postmarked no later than August 10, 2012, to the address listed above or by email to *FMC.INFO@state.gov.*

Dated: May 11, 2012.

Adam H. Bodner,

Director, Office of Real Property Management, U.S. Department of State.

[FR Doc. 2012–14712 Filed 6–15–12; 8:45 am]

BILLING CODE 4710–24–P

DEPARTMENT OF TRANSPORTATION

Federal Aviation Administration

Agency Information Collection Activities: Requests for Comments; Clearance of Renewed Approval of Information Collection: Pilot Schools

AGENCY: Federal Aviation Administration (FAA), DOT.

ACTION: Notice and request for comments.

SUMMARY: In accordance with the Paperwork Reduction Act of 1995, FAA invites public comments about our intention to request the Office of Management and Budget (OMB) approval to renew an information collection. The **Federal Register** Notice with a 60-day comment period soliciting comments on the following collection of information was published on April 3, 2012, vol. 77, no. 64, page 20093. The information on FAA Form 8420–8, Application for Pilot School Certificates, is required from applicants who wish to be issued pilot school certificates and associated ratings.

DATES: Written comments should be submitted by July 18, 2012.

FOR FURTHER INFORMATION CONTACT: Kathy DePaepe at (405) 954–9362, or by email at: *Kathy.A.DePaepe@faa.gov.*

SUPPLEMENTARY INFORMATION:

OMB Control Number: 2120–0009.

Title: Pilot Schools.

Form Numbers: FAA form 8420–8.

Type of Review: Renewal of a current information collection.

Background: The information on FAA Form 8420–8, Application for Pilot School Certificates, is required from applicants who wish to be issued pilot school certificates and associated ratings. Pilot schools train private, commercial, flight instructor, and airline transport pilots, along with training for associated ratings in various types of aircraft. The form is also necessary to assure continuing compliance with Part 141, renewal of certificates every 24 months, and for any amendments to pilot school certificates, FAA approval of pilot school certificate amendments enables schools to provide new training courses not previously approved.

Respondents: Approximately 546 applicants.

Frequency: Information is collected on occasion.

Estimated Average Burden per Response: 27 hours.

Estimated Total Annual Burden: 29,770 hours.

ADDRESSES: Interested persons are invited to submit written comments on the proposed information collection to the Office of Information and Regulatory Affairs, Office of Management and Budget. Comments should be addressed to the attention of the Desk Officer, Department of Transportation/FAA, and sent via electronic mail to oira_submission@omb.eop.gov, or faxed to (202) 395–6974, or mailed to the Office of Information and Regulatory Affairs, Office of Management and Budget, Docket Library, Room 10102, 725 17th Street, NW., Washington, DC 20503.

Public Comments Invited: You are asked to comment on any aspect of this information collection, including (a) Whether the proposed collection of information is necessary for FAA's performance; (b) the accuracy of the estimated burden; (c) ways for FAA to enhance the quality, utility and clarity of the information collection; and (d) ways that the burden could be minimized without reducing the quality of the collected information. The agency will summarize and/or include your comments in the request for OMB's clearance of this information collection.

Issued in Washington, DC, on June 11, 2012.

Albert R. Spence,

FAA Assistant Information Collection Clearance Officer, IT Enterprises Business Services Division, AES–200.

[FR Doc. 2012–14790 Filed 6–15–12; 8:45 am]

BILLING CODE 4910–13–P

DEPARTMENT OF TRANSPORTATION

Federal Aviation Administration

Agency Information Collection Activities: Requests for Comments; Clearance of Renewed Approval of Information Collection: Specific Release Form

AGENCY: Federal Aviation Administration (FAA), DOT.

ACTION: Notice and request for comments.

SUMMARY: In accordance with the Paperwork Reduction Act of 1995, FAA invites public comments about our intention to request the Office of Management and Budget (OMB) approval to renew an information collection. The **Federal Register** Notice with a 60-day comment period soliciting comments on the following collection of information was published on April 3, 2012, vol. 77, no. 64, pages 20093–20094. The information garnered from a signed Specific Release form is used by FAA Special Agents to obtain information related to a specific investigation. That information is then provided to the FAA decision making authority to make FAA employment and/or pilot certification/revocation determinations.

DATES: Written comments should be submitted by July 18, 2012.

FOR FURTHER INFORMATION CONTACT: Kathy DePaepe at (405) 954–9362, or by email at: *Kathy.A.DePaepe@faa.gov.*

SUPPLEMENTARY INFORMATION:

OMB Control Number: 2120–0740.

Title: Specific Release Form.

Form Numbers: FAA Form 1600–81.

Type of Review: Renewal of a current information collection.

Background: Investigations are conducted under 49 USC Sections 106, 40113, 40114, 46101, and 46104, the Aviation Drug Trafficking Control Act of 1984, the Anti-Drug Abuse Act of 1986, and the Anti-Drug Abuse Act of 1988. The public respondents are pilots or FAA job applicants from whom additional information is needed to complete a thorough investigation. The information garnered from a signed Specific Release form is used by FAA Special Agents to obtain information related to a specific investigation.

Respondents: Approximately 270 subjects of investigation.

Frequency: Information is collected as needed.

Estimated Average Burden per Response: 5 minutes.

Estimated Total Annual Burden: 23 hours.

ADDRESSES: Interested persons are invited to submit written comments on the proposed information collection to the Office of Information and Regulatory Affairs, Office of Management and Budget. Comments should be addressed to the attention of the Desk Officer, Department of Transportation/FAA, and sent via electronic mail to *oira_submission@omb.eop.gov,* or faxed to (202) 395–6974, or mailed to the Office of Information and Regulatory Affairs, Office of Management and Budget, Docket Library, Room 10102, 725 17th Street NW., Washington, DC 20503.

Public Comments Invited: You are asked to comment on any aspect of this information collection, including (a) Whether the proposed collection of information is necessary for FAA's performance; (b) the accuracy of the estimated burden; (c) ways for FAA to enhance the quality, utility and clarity of the information collection; and (d) ways that the burden could be minimized without reducing the quality of the collected information. The agency will summarize and/or include your comments in the request for OMB's clearance of this information collection.

Issued in Washington, DC, on June 11, 2012.

Albert R. Spence,

FAA Assistant Information Collection Clearance Officer, IT Enterprises Business Services Division, AES–200.

[FR Doc. 2012–14791 Filed 6–15–12; 8:45 am]

BILLING CODE 4910–13–P

DEPARTMENT OF TRANSPORTATION

Federal Aviation Administration

Nineteenth Meeting: RTCA Special Committee 213, Enhanced Flight Vision Systems/Synthetic Vision Systems (EFVS/SVS)

AGENCY: Federal Aviation Administration (FAA), U.S. Department of Transportation (DOT).

ACTION: Meeting Notice of RTCA Special Committee 213, Enhanced Flight Vision Systems/Synthetic Vision Systems (EFVS/SVS).

SUMMARY: The FAA is issuing this notice to advise the public of the nineteenth meeting of RTCA Special Committee 213, Enhanced Flight Vision Systems/Synthetic Vision Systems (EFVS/SVS).

DATES: The meeting will be held July 17–19, 2012, from 9:00 a.m.–5:00 p.m.

ADDRESSES: The meeting will be held at RTCA, Inc., 1150 18th Street, NW., Suite 910, Washington, DC, 20036.

FOR FURTHER INFORMATION CONTACT: The RTCA Secretariat, 1150 18th Street, NW., Suite 910, Washington, DC, 20036, or by telephone at (202) 833–9339, fax at (202) 833–9434, or Web site at *http://www.rtca.org.*

SUPPLEMENTARY INFORMATION: Pursuant to section 10(a) (2) of the Federal Advisory Committee Act (Pub. L. 92–463, 5 U.S.C., App.), notice is hereby given for a meeting of Special Committee 213. The agenda will include the following:

Tuesday, July 17, 2012

Plenary Discussion (Sign in at 9:00 a.m.)

- Introductions and administrative items
- Review and approve minutes from last full plenary meeting
- Review of updated terms of reference—submitted to June PMC
- Provide Comment Resolution of Document—Draft DO–XXX, Minimum Aviation Performance Standards (MASPS) for an Enhanced Flight Vision System to Enable All-Weather Approach, Landing and Roll-Out to a Safe Taxi Speed

Wednesday, July 18

Plenary Discussion (9:00 a.m.–5:00 p.m.)

- Provide Comment Resolution of Document—Draft DO–XXX, Minimum Aviation Performance Standards (MASPS) for an Enhanced Flight Vision System to Enable All-Weather Approach, Landing and Roll-Out to a Safe Taxi Speed

Thursday, July 19

Plenary Discussion (9:00 a.m.–4:00 p.m.)

- Consider/Approve FRAC Draft for PMC Consideration—Draft DO–XXX, Minimum Aviation Performance Standards (MASPS) for an Enhanced Flight Vision System to Enable All-Weather Approach, Landing and Roll-Out to a Safe Taxi Speed
- Administrative items
- Meeting Adjourned

Attendance is open to the interested public but limited to space availability. With the approval of the chairman, members of the public may present oral statements at the meeting. Persons wishing to present statements or obtain information should contact the person listed in the **FOR FURTHER INFORMATION CONTACT** section. Members of the public may present a written statement to the committee at any time.

Issued in Washington, DC, on June 11, 2012.

David Sicard,

Manager, Business Operations Branch, Federal Aviation Administration.

[FR Doc. 2012–14789 Filed 6–15–12; 8:45 am]

BILLING CODE 4910–13–P

DEPARTMENT OF TRANSPORTATION

Noise Exposure Maps; Cleveland Hopkins International Airport, Cleveland, OH

AGENCY: Federal Aviation Administration, DOT.

ACTION: Notice.

SUMMARY: The Federal Aviation Administration (FAA) announces its determination that the noise exposure maps submitted by the City of Cleveland for Cleveland Hopkins International Airport under the provisions of 49 U.S.C. 47501 et. seq (Aviation Safety and Noise Abatement Act, herein after referred to as ''the Act'') and 14 Code of Federal Regulations (CFR) Part 150 (hereinafter referred to as ''Part 150'') are in compliance with applicable requirements. The FAA also announces that it is reviewing a proposed noise compatibility program that was submitted for Cleveland-Hopkins International Airport under Part 150 in conjunction with the noise exposure map, and that this program will be approved or disapproved on or before December 2, 2012.

DATES: *Effective Date:* The effective date of the FAA's determination on the noise exposure maps and of the start of its review of the associated noise compatibility program is June 6, 2012. The public comment period ends August 4, 2012.

FOR FURTHER INFORMATION CONTACT: Katherine S. Delaney, Detroit Airports District Office, 11677 S. Wayne Road, Romulus, MI 48174, *Katherine.S.Delaney@faa.gov,* and (734) 229–2900. Comments on the proposed noise compatibility program should also be submitted to the above office.

SUPPLEMENTARY INFORMATION: This notice announces the FAA finds that the noise exposure maps submitted for Cleveland Hopkins International Airport are in compliance with applicable requirements of Part 150, effective June 6, 2012. Further, FAA is reviewing a proposed noise compatibility program for that airport which will be approved or disapproved on or before December 2, 2012. This notice also announces the availability of this program for public review and comment.

Under 49 U.S.C., section 47503 of the Act, an airport operator may submit to the FAA noise exposure maps which meet applicable regulations and which depict non-compatible land uses as of the date of submission of such maps, a description of projected aircraft operations, and the ways in which such operations will affect such maps. The Act requires such maps to be developed in consultation with interested and affected parties in the local community, government agencies, and persons using the airport.

An airport operator who submits noise exposure maps (NEMs) in compliance with the requirements of Part 150, may also submit a noise compatibility program (NCP) for FAA review and approval. The NCP sets forth the measures the operator has taken or proposes to take to reduce existing non-compatible uses, prevent the introduction of additional non-compatible uses, and/or mitigate to reduce impacts on non-compatible uses.

The City of Cleveland submitted to the FAA on April 19, 2011 noise exposure maps, descriptions and other documentation that were produced during Cleveland Hopkins International Airport 14 CFR part 150 Noise Exposure Map Update, April 2011 and the Cleveland Hopkins International Airport 14 CFR part 150 Noise Compatibility Program Update, May 2011. It was requested that the FAA review this material as the noise exposure maps, as described in section 47503 of the Act, and that the noise mitigation measures, to be implemented jointly by the airport and surrounding communities, be approved as a noise compatibility program under section 47504 of the Act.

The FAA has completed its review of the noise exposure maps and related descriptions submitted by the City of Cleveland. The specific documentation determined to constitute the noise exposure maps includes: Figure ES–1, 2011 Noise Exposure Map; Figure ES–2, 2017 Noise Exposure Map. Additional NEM graphics for flight tracks are presented in Figure 2, Jet Aircraft Radar and Model Tracks for Arrivals and Departures (North Flow); Figure 3, Propeller Aircraft Radar and Model Tracks for Arrivals and Departures (North Flow); Figure 4, Jet Aircraft Radar and Model Tracks for Arrivals and Departures (South Flow); Figure 5, Propeller Aircraft Radar and Model Tracks for Arrivals and Departures (South Flow). Narrative discussion of the flight tracks is in Chapter 2, Development of Noise Contours, inclusive of airport operations, existing and forecasted fleet mix, and nighttime operations. Appendix B, Master Plan Update: Chapter 2, Aviation Activity Forecasts, provides additional detail on aircraft operations and fleet mix. Noise measurements are detailed in Section 3.3, Noise Measurement Site Selection, Table 9, Summary of Portable Noise Measurement Sites, and Figure 6, Locations of Permanent and Portable Noise Monitoring Sites and Recommendations for New Sites. Existing Land Use in the vicinity of the Cleveland Hopkins International Airport is detailed in Chapter 4, Land Use supported by Figure 7, Preliminary Land Use Area Map of Surrounding Areas and Figure 8 Zoning Map of Surrounding Areas. The FAA has determined that these maps for Cleveland Hopkins International Airport are in compliance with applicable requirements. This determination is effective on June 6, 2012. FAA's determination on an airport operator's noise exposure maps is limited to a finding that the maps were developed in accordance with the procedures contained in appendix A of FAR Part 150. Such determination does not constitute approval of the applicant's data, information or plans, or constitute a commitment to approve a noise compatibility program or to fund the implementation of that program.

If questions arise concerning the precise relationship of specific properties to noise exposure contours depicted on a noise exposure map submitted under section 47503 of the Act, it should be noted that the FAA is not involved in any way in determining the relative locations of specific properties with regard to the depicted noise contours, or in interpreting the noise exposure maps to resolve questions concerning, for example, which properties should be covered by the provisions of section 47506 of the Act. These functions are inseparable from the ultimate land use control and planning responsibilities of local government. These local responsibilities are not changed in any way under Part 150 or through FAA's review of noise exposure maps. Therefore, the responsibility for the detailed overlaying of noise exposure contours onto the map depicting properties on the surface rests exclusively with the airport operator that submitted those maps, or with those public agencies and planning agencies with which consultation is required under section 47503 of the Act. The FAA has relied on the certification by the airport operator, under section 150.21 of Part 150, that the statutorily required consultation has been accomplished.

The FAA has formally received the noise compatibility program for Cleveland Hopkins International Airport, also effective on June 6, 2012. Preliminary review of the submitted material indicates that it conforms to the requirements for the submittal of noise compatibility programs, but that further review will be necessary prior to approval or disapproval of the program. The formal review period, limited by law to a maximum of 180 days, will be completed on or before December 2, 2012.

The FAA's detailed evaluation will be conducted under the provisions of section 150.33 of Part 150. The primary considerations in the evaluation process are whether the proposed measures may reduce the level of aviation safety, create an undue burden on interstate or foreign commerce, or be reasonably consistent with obtaining the goal of reducing existing non-compatible land uses and preventing the introduction of additional non-compatible land uses.

Interested persons are invited to comment on the proposed program with specific reference to these factors. All relevant comments, other than those properly addressed to local land use authorities, will be considered by the FAA to the extent practicable. Copies of the noise exposure maps, the FAA's evaluation of the maps, and the proposed noise compatibility program are available for examination at the following locations:

Federal Aviation Administration, Detroit Airports District Office, 11677 South Wayne Road, Suite 107, Romulus, MI 48174, 8:00 a.m.–4:30 p.m.

Traci Clark, Deputy Chief Planning and Engineering, Department of Port Control, Cleveland Hopkins International Airport, 19501 Five Points Drive, Building #206, Cleveland, OH 44135, 8:00 a.m.–5:00 p.m.

Questions may be directed to the individual named above under the heading, **FOR FURTHER INFORMATION CONTACT**.

Issued in Romulus, MI, June 6, 2012.

John L. Mayfield, Jr.,

Manager, Detroit Airports District Office.

[FR Doc. 2012–14817 Filed 6–15–12; 8:45 am]

BILLING CODE 4910–13–P

DEPARTMENT OF TRANSPORTATION

Federal Aviation Administration

[Summary Notice No. PE–2012–24]

Petition for Exemption; Summary of Petition Received

AGENCY: Federal Aviation Administration (FAA), DOT.

ACTION: Notice of petition for exemption received.

SUMMARY: This notice contains a summary of a petition seeking relief from specified requirements of 14 CFR. The purpose of this notice is to improve the public's awareness of, and participation in, this aspect of FAA's regulatory activities. Neither publication of this notice nor the inclusion or omission of information in the summary is intended to affect the legal status of the petition or its final disposition.

DATES: Comments on this petition must identify the petition docket number involved and must be received on or before July 9, 2012.

ADDRESSES: You may send comments identified by Docket Number FAA–2012–0587 using any of the following methods:

- *Government-wide rulemaking web site:* Go to *http://www.regulations.gov* and follow the instructions for sending your comments electronically.
- *Mail:* Send comments to the Docket Management Facility; U.S. Department of Transportation, 1200 New Jersey Avenue SE., West Building Ground Floor, Room W12–140, Washington, DC 20590.
- *Fax:* Fax comments to the Docket Management Facility at 202–493–2251.
- *Hand Delivery:* Bring comments to the Docket Management Facility in Room W12–140 of the West Building Ground Floor at 1200 New Jersey Avenue SE., Washington, DC, between 9 a.m. and 5 p.m., Monday through Friday, except Federal holidays.

Privacy: We will post all comments we receive, without change, to *http://www.regulations.gov,* including any personal information you provide. Using the search function of our docket web site, anyone can find and read the comments received into any of our dockets, including the name of the individual sending the comment (or signing the comment for an association, business, labor union, etc.). You may review DOT's complete Privacy Act Statement in the **Federal Register** published on April 11, 2000 (65 FR 19477–78).

Docket: To read background documents or comments received, go to *http://www.regulations.gov* at any time or to the Docket Management Facility in Room W12–140 of the West Building Ground Floor at 1200 New Jersey Avenue SE., Washington, DC, between 9 a.m. and 5 p.m., Monday through Friday, except Federal holidays.

FOR FURTHER INFORMATION CONTACT: Tyneka Thomas ARM–105, (202) 267–7626, FAA, Office of Rulemaking, 800 Independence Ave SW., Washington, DC 20591. This notice is published pursuant to 14 CFR 11.85.

Issued in Washington, DC, on June 11, 2012.

Brenda D. Courtney,

Acting Director, Office of Rulemaking.

Petition for Exemption

Docket No.: FAA–2012–0587
Petitioner: Fern Case
Section of 14 CFR Affected: 14 CFR § 121.317(f) and (k)

Description of Relief Sought:

The relief sought would allow Ms. Fern Case to use the aircraft lavatory while the Fasten Seat Belt sign is illuminated. Without this exemption, Ms. Case would not be able to fly due to a functional disorder requiring access to the lavatory without reasonable notice.

[FR Doc. 2012–14830 Filed 6–15–12; 8:45 am]

BILLING CODE 4910–13–P

DEPARTMENT OF TRANSPORTATION

Federal Motor Carrier Safety Administration

[Docket No. FMCSA–2012–0162]

Qualification of Drivers; Exemption Applications; Diabetes Mellitus

AGENCY: Federal Motor Carrier Safety Administration (FMCSA).

ACTION: Notice of applications for exemption from the diabetes mellitus requirement; request for comments.

SUMMARY: FMCSA announces receipt of applications from 17 individuals for exemption from the prohibition against persons with insulin-treated diabetes mellitus (ITDM) operating commercial motor vehicles (CMVs) in interstate commerce. If granted, the exemptions would enable these individuals with ITDM to operate CMVs in interstate commerce.

DATES: Comments must be received on or before July 18, 2012.

ADDRESSES: You may submit comments bearing the Federal Docket Management System (FDMS) Docket No. FMCSA–2012–0162 using any of the following methods:

- *Federal eRulemaking Portal:* Go to *http://www.regulations.gov.* Follow the on-line instructions for submitting comments.
- *Mail:* Docket Management Facility; U.S. Department of Transportation, 1200 New Jersey Avenue SE., West Building Ground Floor, Room W12–140, Washington, DC 20590–0001.
- *Hand Delivery:* West Building Ground Floor, Room W12–140, 1200 New Jersey Avenue SE., Washington, DC, between 9 a.m. and 5 p.m., Monday through Friday, except Federal holidays.
- *Fax:* 1–202–493–2251.

Instructions: Each submission must include the Agency name and the docket numbers for this notice. Note that all comments received will be posted without change to *http://www.regulations.gov,* including any personal information provided. Please see the Privacy Act heading below for further information.

Docket: For access to the docket to read background documents or comments, go to *http://www.regulations.gov* at any time or Room W12–140 on the ground level of the West Building, 1200 New Jersey Avenue SE., Washington, DC, between 9 a.m. and 5 p.m., Monday through Friday, except Federal holidays. The Federal Docket Management System (FDMS) is available 24 hours each day, 365 days each year. If you want acknowledgment that we received your comments, please include a self-addressed, stamped envelope or postcard or print the acknowledgement page that appears after submitting comments on-line.

Privacy Act: Anyone may search the electronic form of all comments received into any of our dockets by the name of the individual submitting the comment (or of the person signing the comment, if submitted on behalf of an association, business, labor union, etc.). You may review DOT's Privacy Act Statement for the FDMS published in the **Federal Register** on January 17, 2008 (73 FR 3316), or you may visit *http://edocket.access.gpo.gov/2008/pdf/E8-785.pdf.*

FOR FURTHER INFORMATION CONTACT: Elaine M. Papp, Chief, Medical Programs Division, (202) 366–4001, *fmcsamedical@dot.gov,* FMCSA, Department of Transportation, 1200 New Jersey Avenue SE., Room W64–224, Washington, DC 20590–0001. Office hours are from 8:30 a.m. to 5 p.m., Monday through Friday, except Federal holidays.

SUPPLEMENTARY INFORMATION:

Background

Under 49 U.S.C. 31136(e) and 31315, FMCSA may grant an exemption from the Federal Motor Carrier Safety Regulations for a 2-year period if it finds ''such exemption would likely achieve a level of safety that is equivalent to or greater than the level that would be achieved absent such exemption.'' The statute also allows the Agency to renew exemptions at the end of the 2-year period. The 17 individuals listed in this notice have recently requested such an exemption from the diabetes prohibition in 49 CFR 391.41(b)(3), which applies to drivers of CMVs in interstate commerce. Accordingly, the Agency will evaluate the qualifications of each applicant to determine whether granting the exemption will achieve the required level of safety mandated by the statutes.

Qualifications of Applicants

Bruce R. Bennett

Mr. Bennett, age 48, has had ITDM since 2011. His endocrinologist examined him in 2012 and certified that he has had no severe hypoglycemic reactions resulting in loss of consciousness, requiring the assistance of another person, or resulting in impaired cognitive function that occurred without warning in the past 12 months and no recurrent (2 or more) severe hypoglycemic episodes in the last 5 years. His endocrinologist certifies that Mr. Bennett understands diabetes management and monitoring, has stable control of his diabetes using insulin, and is able to drive a CMV safely. Mr. Bennett meets the vision requirements of 49 CFR 391.41(b)(10). His optometrist examined him in 2011 and certified that he does not have diabetic retinopathy. He holds a Class A Commercial Driver's License (CDL) from Minnesota.

Stephen W. Best

Mr. Best, 46, has had ITDM since 2012. His endocrinologist examined him in 2012 and certified that he has had no severe hypoglycemic reactions resulting in loss of consciousness, requiring the assistance of another person, or resulting in impaired cognitive function that occurred without warning in the past 12 months and no recurrent (2 or more) severe hypoglycemic episodes in the last 5 years. His endocrinologist certifies that Mr. Best understands diabetes management and monitoring, has stable control of his diabetes using insulin, and is able to drive a CMV safely. Mr. Best meets the vision requirements of 49 CFR 391.41(b)(10). His ophthalmologist examined him in 2012 and certified that he does not have diabetic retinopathy. He holds a Class A CDL from Pennsylvania.

Steven L. Cornwell

Mr. Cornwell, 54, has had ITDM since 2011. His endocrinologist examined him in 2012 and certified that he has had no severe hypoglycemic reactions resulting in loss of consciousness, requiring the assistance of another person, or resulting in impaired cognitive function that occurred without warning in the past 12 months and no recurrent (2 or more) severe hypoglycemic episodes in the last 5 years. His endocrinologist certifies that Mr. Cornwell understands diabetes management and monitoring, has stable control of his diabetes using insulin, and is able to drive a CMV safely. Mr. Cornwell meets the vision requirements of 49 CFR 391.41(b)(10). His optometrist examined him in 2012 and certified that he does not have diabetic retinopathy. He holds a Class B CDL from Iowa.

Steven D. Hancock

Mr. Hancock, 46, has had ITDM since 2007. His endocrinologist examined him in 2012 and certified that he has had no severe hypoglycemic reactions resulting in loss of consciousness, requiring the assistance of another person, or resulting in impaired cognitive function that occurred without warning in the past 12 months and no recurrent (2 or more) severe hypoglycemic episodes in the last 5 years. His endocrinologist certifies that Mr. Hancock understands diabetes management and monitoring, has stable control of his diabetes using insulin, and is able to drive a CMV safely. Mr. Hancock meets the vision requirements of 49 CFR 391.41(b)(10). His optometrist examined him in 2012 and certified that he does not have diabetic retinopathy. He holds a Class A CDL from Indiana.

Michael A. Hendrickson

Mr. Hendrickson, 38, has had ITDM since 2010. His endocrinologist examined him in 2011 and certified that he has had no severe hypoglycemic reactions resulting in loss of consciousness, requiring the assistance of another person, or resulting in impaired cognitive function that occurred without warning in the past 12 months and no recurrent (2 or more) severe hypoglycemic episodes in the last 5 years. His endocrinologist certifies that Mr. Hendrickson understands diabetes management and monitoring, has stable control of his diabetes using insulin, and is able to drive a CMV safely. Mr. Hendrickson meets the vision requirements of 49 CFR 391.41(b)(10). His optometrist examined him in 2011 and certified that he does not have diabetic retinopathy. He holds a Class A CDL from Oregon.

James B. Hills

Mr. Hills, 61, has had ITDM since 2011. His endocrinologist examined him in 2012 and certified that he has had no severe hypoglycemic reactions resulting in loss of consciousness, requiring the assistance of another person, or resulting in impaired cognitive function that occurred without warning in the past 12 months and no recurrent (2 or more) severe hypoglycemic episodes in the last 5 years. His endocrinologist certifies that Mr. Hills understands diabetes management and monitoring, has stable control of his diabetes using insulin, and is able to drive a CMV safely. Mr. Hills meets the vision requirements of 49 CFR 391.41(b)(10). His ophthalmologist examined him in 2011 and certified that he has stable nonproliferative diabetic retinopathy. He holds a Class A CDL from Kansas.

Charles Keegan, Jr.

Mr. Keegan, 53, has had ITDM since 2009. His endocrinologist examined him in 2011 and certified that he has had no severe hypoglycemic reactions resulting in loss of consciousness, requiring the assistance of another person, or resulting in impaired cognitive function that occurred without warning in the past 12 months and no recurrent (2 or more) severe hypoglycemic episodes in the last 5 years. His endocrinologist certifies that Mr. Keegan understands diabetes management and monitoring, has stable control of his diabetes using insulin, and is able to drive a CMV safely.

Mr. Keegan meets the vision requirements of 49 CFR 391.41(b)(10). His ophthalmologist examined him in 2012 and certified that he does not have diabetic retinopathy. He holds a Class A CDL from New Jersey.

Londell W. Luther

Mr. Luther, 32, has had ITDM since 1990. His endocrinologist examined him in 2012 and certified that he has had no severe hypoglycemic reactions resulting in loss of consciousness, requiring the assistance of another person, or resulting in impaired cognitive function that occurred without warning in the past 12 months and no recurrent (2 or more) severe hypoglycemic episodes in the last 5 years. His endocrinologist certifies that Mr. Luther understands diabetes management and monitoring, has stable control of his diabetes using insulin, and is able to drive a CMV safely. Mr. Luther meets the vision requirements of 49 CFR 391.41(b)(10).

His ophthalmologist examined him in 2012 and certified that he has stable nonproliferative diabetic retinopathy. He holds a Class A CDL from Maryland.

Darrell L. Meadows

Mr. Meadows, 68, has had ITDM since 2007. His endocrinologist examined him in 2012 and certified that he has had no severe hypoglycemic reactions resulting in loss of consciousness, requiring the assistance of another person, or resulting in impaired cognitive function that occurred without warning in the past 12 months and no recurrent (2 or more) severe hypoglycemic episodes in the last 5 years. His endocrinologist certifies that Mr. Meadows understands diabetes management and monitoring, has stable control of his diabetes using insulin, and is able to drive a CMV safely. Mr. Meadows meets the vision requirements of 49 CFR 391.41(b)(10). His optometrist examined him in 2012 and certified that he does not have diabetic retinopathy. He holds a Class B operator's license from Texas.

John P. Miller

Mr. Miller, 60, has had ITDM since 2012. His endocrinologist examined him in 2012 and certified that he has had no severe hypoglycemic reactions resulting in loss of consciousness, requiring the assistance of another person, or resulting in impaired cognitive function that occurred without warning in the past 12 months and no recurrent (2 or more) severe hypoglycemic episodes in the last 5 years. His endocrinologist certifies that Mr. Miller understands diabetes management and monitoring, has stable control of his diabetes using insulin, and is able to drive a CMV safely. Mr. Miller meets the vision requirements of 49 CFR 391.41(b)(10). His ophthalmologist examined him in 2012 and certified that he does not have diabetic retinopathy. He holds a Class A CDL from Oklahoma.

Gary J. Rice

Mr. Rice, 67, has had ITDM since 2010. His endocrinologist examined him in 2012 and certified that he has had no severe hypoglycemic reactions resulting in loss of consciousness, requiring the assistance of another person, or resulting in impaired cognitive function that occurred without warning in the past 12 months and no recurrent (2 or more) severe hypoglycemic episodes in the last 5 years. His endocrinologist certifies that Mr. Rice understands diabetes management and monitoring, has stable control of his diabetes using insulin, and is able to drive a CMV safely. Mr. Rice meets the vision requirements of 49 CFR 391.41(b)(10). His ophthalmologist examined him in 2012 and certified that he does not have diabetic retinopathy. He holds a Class A CDL from Vermont.

Jose A. Rosario

Mr. Rosario, 35, has had ITDM since 2011. His endocrinologist examined him in 2012 and certified that he has had no severe hypoglycemic reactions resulting in loss of consciousness, requiring the assistance of another person, or resulting in impaired cognitive function that occurred without warning in the past 12 months and no recurrent (2 or more) severe hypoglycemic episodes in the last 5 years. His endocrinologist certifies that Mr. Rosario understands diabetes management and monitoring, has stable control of his diabetes using insulin, and is able to drive a CMV safely. Mr. Rosario meets the vision requirements of 49 CFR 391.41(b)(10). His optometrist examined him in 2012 and certified that he does not have diabetic retinopathy. He holds a Class D operator's license from New York.

Jordan D. Seeburger

Mr. Seeburger, 24, has had ITDM since 1989. His endocrinologist examined him in 2011 and certified that he has had no severe hypoglycemic reactions resulting in loss of consciousness, requiring the assistance of another person, or resulting in impaired cognitive function that occurred without warning in the past 12 months and no recurrent (2 or more) severe hypoglycemic episodes in the last 5 years. His endocrinologist certifies that Mr. Seeburger understands diabetes management and monitoring, has stable control of his diabetes using insulin, and is able to drive a CMV safely. Mr. Seeburger meets the vision requirements of 49 CFR 391.41(b)(10). His ophthalmologist examined him in 2012 and certified that he does not have diabetic retinopathy. He holds a Class C operator's license from Pennsylvania.

Allyn E. Smith

Mr. Smith, 65, has had ITDM since 1998. His endocrinologist examined him in 2012 and certified that he has had no severe hypoglycemic reactions resulting in loss of consciousness, requiring the assistance of another person, or resulting in impaired cognitive function that occurred without warning in the past 12 months and no recurrent (2 or more) severe hypoglycemic episodes in the last 5 years. His endocrinologist certifies that Mr. Smith understands diabetes management and monitoring, has stable control of his diabetes using insulin, and is able to drive a CMV safely. Mr. Smith meets the vision requirements of 49 CFR 391.41(b)(10). His optometrist examined him in 2012 and certified that he does not have diabetic retinopathy. He holds a Class A CDL from South Dakota.

Hayden P. Thielen

Mr. Thielen, 21, has had ITDM since 2001. His endocrinologist examined him in 2012 and certified that he has had no severe hypoglycemic reactions resulting in loss of consciousness, requiring the assistance of another person, or resulting in impaired cognitive function that occurred without warning in the past 12 months and no recurrent (2 or more) severe hypoglycemic episodes in the last 5 years. His endocrinologist certifies that Mr. Thielen understands diabetes management and monitoring, has stable control of his diabetes using insulin, and is able to drive a CMV safely. Mr. Thielen meets the vision requirements of 49 CFR 391.41(b)(10). His optometrist examined him in 2012 and certified that he does not have diabetic retinopathy. He holds a Class A CDL from Minnesota.

Larry J. Vanzalen

Mr. Vanzalen, 61, has had ITDM since 2012. His endocrinologist examined him in 2012 and certified that he has had no severe hypoglycemic reactions resulting in loss of consciousness, requiring the assistance of another person, or resulting in impaired cognitive function that occurred without warning in the past 12 months and no recurrent (2 or more) severe hypoglycemic episodes in the last 5 years. His endocrinologist certifies that Mr. Vanzalen understands diabetes management and monitoring, has stable control of his diabetes using insulin, and is able to drive a CMV safely. Mr. Vanzalen meets the vision requirements of 49 CFR 391.41(b)(10). His ophthalmologist examined him in 2012 and certified that he does not have diabetic retinopathy. He holds a Class A CDL from Michigan.

Jason R. Zeorian

Mr. Zeorian, 34, has had ITDM since 2012. His endocrinologist examined him in 2012 and certified that he has had no severe hypoglycemic reactions resulting in loss of consciousness, requiring the assistance of another person, or resulting in impaired cognitive function that occurred without warning in the past 12 months and no recurrent (2 or more) severe hypoglycemic episodes in the last 5 years. His endocrinologist certifies that Mr. Zeorian understands diabetes management and monitoring, has stable control of his diabetes using insulin, and is able to drive a CMV safely. Mr. Zeorian meets the vision

requirements of 49 CFR 391.41(b)(10). His ophthalmologist examined him in 2012 and certified that he does not have diabetic retinopathy. He holds a Class A CDL from Nebraska.

Request for Comments

In accordance with 49 U.S.C. 31136(e) and 31315, FMCSA requests public comment from all interested persons on the exemption petitions described in this notice. We will consider all comments received before the close of business on the closing date indicated in the date section of the notice.

FMCSA notes that section 4129 of the Safe, Accountable, Flexible and Efficient Transportation Equity Act: A Legacy for Users requires the Secretary to revise its diabetes exemption program established on September 3, 2003 (68 FR 52441).[1] The revision must provide for individual assessment of drivers with diabetes mellitus, and be consistent with the criteria described in section 4018 of the Transportation Equity Act for the 21st Century (49 U.S.C. 31305).

Section 4129 requires: (1) Elimination of the requirement for 3 years of experience operating CMVs while being treated with insulin; and (2) establishment of a specified minimum period of insulin use to demonstrate stable control of diabetes before being allowed to operate a CMV.

In response to section 4129, FMCSA made immediate revisions to the diabetes exemption program established by the September 3, 2003 notice. FMCSA discontinued use of the 3-year driving experience and fulfilled the requirements of section 4129 while continuing to ensure that operation of CMVs by drivers with ITDM will achieve the requisite level of safety required of all exemptions granted under 49 U.S.C. 31136 (e).

Section 4129(d) also directed FMCSA to ensure that drivers of CMVs with ITDM are not held to a higher standard than other drivers, with the exception of limited operating, monitoring and medical requirements that are deemed medically necessary.

The FMCSA concluded that all of the operating, monitoring and medical requirements set out in the September 3, 2003 notice, except as modified, were in compliance with section 4129(d). Therefore, all of the requirements set out in the September 3, 2003 notice, except as modified by the notice in the **Federal Register** on November 8, 2005 (70 FR 67777), remain in effect.

[1] Section 4129(a) refers to the 2003 notice as a ''final rule.'' However, the 2003 notice did not issue a ''final rule'' but did establish the procedures and standards for issuing exemptions for drivers with ITDM.

Issued on: June 11, 2012.

Larry W. Minor,

Associate Administrator for Policy.

[FR Doc. 2012–14745 Filed 6–15–12; 8:45 am]

BILLING CODE P

DEPARTMENT OF TRANSPORTATION

Federal Motor Carrier Safety Administration

[Docket No. FMCSA–2012–0159]

Qualification of Drivers; Exemption Applications; Vision

AGENCY: Federal Motor Carrier Safety Administration (FMCSA), DOT.

ACTION: Notice of applications for exemptions; request for comments.

SUMMARY: FMCSA announces receipt of applications from 10 individuals for exemption from the vision requirement in the Federal Motor Carrier Safety Regulations. If granted, the exemptions would enable these individuals to qualify as drivers of commercial motor vehicles (CMVs) in interstate commerce without meeting the Federal vision requirement.

DATES: Comments must be received on or before July 18, 2012.

ADDRESSES: You may submit comments bearing the Federal Docket Management System (FDMS) Docket No. FMCSA–2012–0159 using any of the following methods:

- *Federal eRulemaking Portal:* Go to *http://www.regulations.gov.* Follow the on-line instructions for submitting comments.
- *Mail:* Docket Management Facility; U.S. Department of Transportation, 1200 New Jersey Avenue SE., West Building Ground Floor, Room W12–140, Washington, DC 20590–0001.
- *Hand Delivery:* West Building Ground Floor, Room W12–140, 1200 New Jersey Avenue SE., Washington, DC, between 9 a.m. and 5 p.m., Monday through Friday, except Federal holidays.
- *Fax:* 1–202–493–2251.

Instructions: Each submission must include the Agency name and the docket numbers for this notice. Note that all comments received will be posted without change to *http://www.regulations.gov,* including any personal information provided. Please see the Privacy Act heading below for further information.

Docket: For access to the docket to read background documents or comments, go to *http://www.regulations.gov* at any time or Room W12–140 on the ground level of the West Building, 1200 New Jersey Avenue, SE., Washington, DC, between 9 a.m. and 5 p.m., Monday through Friday, except Federal holidays. The FDMS is available 24 hours each day, 365 days each year. If you want acknowledgment that we received your comments, please include a self-addressed, stamped envelope or postcard or print the acknowledgement page that appears after submitting comments on-line.

Privacy Act: Anyone may search the electronic form of all comments received into any of our dockets by the name of the individual submitting the comment (or of the person signing the comment, if submitted on behalf of an association, business, labor union, etc.). You may review DOT's Privacy Act Statement for the FDMS published in the **Federal Register** on January 17, 2008 (73 FR 3316), or you may visit *http://edocket.access.gpo.gov/2008/pdf/E8–785.pdf.*

FOR FURTHER INFORMATION CONTACT: Elaine M. Papp, Chief, Medical Programs Division, (202) 366–4001, *fmcsamedical@dot.gov,* FMCSA, Department of Transportation, 1200 New Jersey Avenue SE., Room W64–224, Washington, DC 20590–0001. Office hours are from 8:30 a.m. to 5 p.m., Monday through Friday, except Federal holidays.

SUPPLEMENTARY INFORMATION:

Background

Under 49 U.S.C. 31136(e) and 31315, FMCSA may grant an exemption from the Federal Motor Carrier Safety Regulations for a 2-year period if it finds ''such exemption would likely achieve a level of safety that is equivalent to or greater than the level that would be achieved absent such exemption.'' FMCSA can renew exemptions at the end of each 2-year period. The 10 individuals listed in this notice have each requested such an exemption from the vision requirement in 49 CFR 391.41(b)(10), which applies to drivers of CMVs in interstate commerce. Accordingly, the Agency will evaluate the qualifications of each applicant to determine whether granting an exemption will achieve the required level of safety mandated by statute.

Qualifications of Applicants

Donald S. Dickerson

Mr. Dickerson, age 65, has complete loss of vision in his right eye due to a traumatic injury sustained in 2000. The best corrected visual acuity in his left eye is 20/20. Following an examination in 2011, his optometrist noted, ''In my opinion Mr. Dickerson has no difficulties in performing visual tasks

needed to operate a commercial vehicle.'' Mr. Dickerson reported that he has driven straight trucks for 28 years, accumulating 1.7 million miles. He holds a Class A Commercial Driver's License (CDL) from West Virginia. His driving record for the last 3 years shows no crashes and no convictions for moving violations in a CMV.

Michael J. Ernst

Mr. Ernst, 61, has loss of vision in his left eye due to a traumatic injury sustained in 1972. The best corrected visual acuity in his right eye is 20/20, and in his left eye, light perception only. Following an examination in 2012, his optometrist noted, ''Mr. Ernst has sufficient vision to operate a commercial vehicle.'' Mr. Ernst reported that he has driven tractor-trailer combinations for 19 years, accumulating 1.1 million miles. He holds a Class A CDL from Nebraska. His driving record for the last 3 years shows no crashes and no convictions for moving violations in a CMV.

Derek L. Jones, Sr.

Mr. Jones, 50 has had an enucleation of his left eye since childhood. The best corrected visual acuity in his right eye is 20/20. Following an examination in 2012, his ophthalmologist noted, ''This and the visual acuity indicates that he has normal vision in this eye thus his vision should not limit his ability to operate a commercial vehicle.'' Mr. Jones reported that he has driven straight trucks for one year, accumulating 37,500 miles, and tractor-trailer combinations for 25 years, accumulating 1.5 million miles. He holds a Class A CDL from Georgia. His driving record for the last 3 years shows no crashes and no convictions for moving violations in a CMV.

Richard L. Miller

Mr. Miller, 52, has had amblyopia in his left eye since birth. The best corrected visual acuity in his right eye is 20/20, and in his left eye, 20/400. Following an examination in 2011, his optometrist noted, ''It is my opinion, given Mr. Miller's life long amblyopia (decreased vision of one eye) that he is well adapted to his visual condition and makes appropriate adjustments for operating a commercial vehicle.'' Mr. Miller reported that he has driven tractor-trailer combinations for 30 years, accumulating 3.9 million miles. He holds a Class A CDL from Indiana. His driving record for the last 3 years shows no crashes and no convictions for moving violations in a CMV.

James R. Morgan

Mr. Morgan, 58, has a prosthetic right eye due to a history of retinoblastoma sustained as a child. The best corrected visual acuity in his left eye is 20/20. Following an examination in 2012, his ophthalmologist noted, ''The patient does have sufficient vision to meet the requirements to operate a commercial vehicle.'' Mr. Morgan reported that he has driven straight trucks for 15 years, accumulating 150,000 miles, and tractor-trailer combinations for 20 years, accumulating 1,000 miles. He holds a Class C chauffer's license from Michigan. His driving record for the last 3 years shows no crashes and no convictions for moving violations in a CMV.

William C. Sanders

Mr. Sanders, 31, has optic atrophy in his right eye from a traumatic injury sustained as a child. The best corrected visual acuity in his right eye is 20/150, and in his left eye, 20/20. Following an examination in 2011, his optometrist noted, ''In my opinion, patient has sufficient vision to perform the driving tasks required to operate a commercial vehicle.'' Mr. Sanders reported that he has driven straight trucks for 17 years, accumulating 85,000 miles. He holds a Class B CDL from Tennessee. His driving record for the last 3 years shows no crashes and no convictions for moving violations in a CMV.

Dan P. Till

Mr. Till, 63, has had amblyopia in his left eye since childhood. The best corrected visual acuity in his right eye is 20/25 and in his left eye, 20/60. Following an examination in 2012, his ophthalmologist noted, ''In my medical opinion the patient Mr. Till has sufficient corrected vision to perform the task to operate a commercial motor vehicle, and qualify for Federal Motor Carrier Safety Administration criteria.'' Mr. Till reported that he has driven straight trucks for 41 years, accumulating 164,000 miles, and tractor-trailer combinations for 41 years, accumulating 4.5 million miles. He holds a Class A CDL from Texas. His driving record for the last 3 years shows no crashes and no convictions for moving violations in a CMV.

Richard D. Tucker II

Mr. Tucker, 43, has had amblyopia in his left eye since childhood. The best corrected visual acuity in his right eye, 20/20, and in his left eye, 20/80. Following an examination in 2011, his optometrist noted, ''It is our opinion that Mr. Tucker has sufficient vision to operate a commercial vehicle, however, it is strongly recommended that he returns for his annual eye examination.'' Mr. Tucker reported that he has driven straight trucks for 23 years, accumulating 1.8 million miles. He holds a Class A CDL from North Carolina. His driving record for the last 3 years shows no crashes and no convictions for moving violations in a CMV.

Jay A. Turner

Mr. Turner, 46, has had refractive amblyopia in his left eye since birth. The best corrected visual acuity in his right eye, 20/20, and in his left eye, 20/400. Following an examination in 2012, his optometrist noted, ''Mr. Jay Turner, in our opinion, has sufficient vision to perform the driving tasks required to operate a commercial vehicle.'' Mr. Turner reported that he has driven straight trucks for 4 years, accumulating 208,000 miles, and tractor-trailer combinations for 9 years, accumulating 468,000 miles. He holds a Class A CDL from Ohio. His driving record for the last 3 years shows one crash, which he was not cited for, and no convictions for moving violations in a CMV.

Jack L. Woolever

Mr. Woolever, 58, has had amblyopia in his left eye since birth. The best corrected visual acuity in his right eye is 20/30, and in his left eye, 20/400. Following an examination in 2012, his ophthalmologist noted, ''I believe this patient has sufficient vision to be able to continue driving commercially.'' Mr. Woolever reported that he has driven straight trucks for 5 years, accumulating 50,000 miles, and tractor-trailer combinations for 5 years, accumulating 50,000 miles. He holds a Class A CDL from Missouri. His driving record for the last 3 years shows no crashes and no convictions for moving violations in a CMV.

Request for Comments

In accordance with 49 U.S.C. 31136(e) and 31315, FMCSA requests public comment from all interested persons on the exemption petitions described in this notice. The Agency will consider all comments received before the close of business July 18, 2012. Comments will be available for examination in the docket at the location listed under the **ADDRESSES** section of this notice. The Agency will file comments received after the comment closing date in the public docket, and will consider them to the extent practicable.

In addition to late comments, FMCSA will also continue to file, in the public docket, relevant information that becomes available after the comment

closing date. Interested persons should monitor the public docket for new material.

Issued on: June 11, 2012.

Larry W. Minor,

Associate Administrator for Policy.

[FR Doc. 2012–14752 Filed 6–15–12; 8:45 am]

BILLING CODE 4910–EX–P

DEPARTMENT OF TRANSPORTATION

Federal Motor Carrier Safety Administration

[Docket No. FMCSA–2001–10578; FMCSA–2002–12294; FMCSA–2003–15268; FMCSA–2004–17195; FMCSA–2005–23099; FMCSA–2006–23773; FMCSA–2007–0071; FMCSA–2009–0011; FMCSA–2009–0206; FMCSA–2010–0050; FMCSA–2010–0082]

Qualification of Drivers; Exemption Applications; Vision

AGENCY: Federal Motor Carrier Safety Administration (FMCSA), DOT.

ACTION: Notice of renewal of exemptions; request for comments.

SUMMARY: FMCSA announces its decision to renew the exemptions from the vision requirement in the Federal Motor Carrier Safety Regulations for 25 individuals. FMCSA has statutory authority to exempt individuals from the vision requirement if the exemptions granted will not compromise safety. The Agency has concluded that granting these exemption renewals will provide a level of safety that is equivalent to or greater than the level of safety maintained without the exemptions for these commercial motor vehicle (CMV) drivers.

DATES: This decision is effective July 12, 2012. Comments must be received on or before July 18, 2012.

ADDRESSES: You may submit comments bearing the Federal Docket Management System (FDMS) numbers: Docket No. FMCSA–2001–10578; FMCSA–2002–12294; FMCSA–2003–15268; FMCSA–2004–17195; FMCSA–2005–23099; FMCSA–2006–23773; FMCSA–2007–0071; FMCSA–2009–0011; FMCSA–2009–0206; FMCSA–2010–0050; FMCSA–2010–0082, using any of the following methods:

- *Federal eRulemaking Portal:* Go to *http://www.regulations.gov.* Follow the on-line instructions for submitting comments.
- *Mail:* Docket Management Facility; U.S. Department of Transportation, 1200 New Jersey Avenue SE., West Building Ground Floor, Room W12–140, Washington, DC 20590–0001.
- *Hand Delivery or Courier:* West Building Ground Floor, Room W12–140, 1200 New Jersey Avenue SE., Washington, DC, between 9 a.m. and 5 p.m., Monday through Friday, except Federal Holidays.
- *Fax:* 1–202–493–2251.

Instructions: Each submission must include the Agency name and the docket number for this notice. Note that DOT posts all comments received without change to *http://www.regulations.gov,* including any personal information included in a comment. Please see the Privacy Act heading below.

Docket: For access to the docket to read background documents or comments, go to *http://www.regulations.gov* at any time or Room W12–140 on the ground level of the West Building, 1200 New Jersey Avenue SE., Washington, DC, between 9 a.m. and 5 p.m., Monday through Friday, except Federal holidays. The Federal Docket Management System (FDMS) is available 24 hours each day, 365 days each year. If you want acknowledgment that we received your comments, please include a self-addressed, stamped envelope or postcard or print the acknowledgement page that appears after submitting comments on-line.

Privacy Act: Anyone may search the electronic form of all comments received into any of our dockets by the name of the individual submitting the comment (or of the person signing the comment, if submitted on behalf of an association, business, labor union, etc.). You may review DOT's Privacy Act Statement for the FDMS published in the **Federal Register** on January 17, 2008 (73 FR 3316), or you may visit *http://edocket.access.gpo.gov/2008/pdf/E8-785.pdf.*

FOR FURTHER INFORMATION CONTACT: Elaine M. Papp, Chief, Medical Programs Division, 202–366–4001, *fmcsamedical@dot.gov,* FMCSA, Department of Transportation, 1200 New Jersey Avenue SE., Room W64–224, Washington, DC 20590–0001. Office hours are from 8:30 a.m. to 5 p.m. Monday through Friday, except Federal holidays.

SUPPLEMENTARY INFORMATION:

Background

Under 49 U.S.C. 31136(e) and 31315, FMCSA may renew an exemption from the vision requirements in 49 CFR 391.41(b)(10), which applies to drivers of CMVs in interstate commerce, for a two-year period if it finds ''such exemption would likely achieve a level of safety that is equivalent to or greater than the level that would be achieved absent such exemption.'' The procedures for requesting an exemption (including renewals) are set out in 49 CFR part 381.

Exemption Decision

This notice addresses 25 individuals who have requested renewal of their exemptions in accordance with FMCSA procedures. FMCSA has evaluated these 25 applications for renewal on their merits and decided to extend each exemption for a renewable two-year period. They are:

Paul J. Bannon (DE)
Clarke C. Boynton (MA)
Walter M. Brown (SC)
Clare H. Buxton (MI)
Chadwick S. Chambers (AL)
Lester M. Ellingson, Jr. (ND)
Miguel H. Espinoza (CA)
Billy R. Gibbs (MD)
Clyde J. Harms (IL)
Clifford J. Harris (VA)
Ricky P. Hastings (TX)
Mark Hill (WV)
William L. Martin (OR)
Gary McKown (WV)
Leland B. Moss (VT)
Roderick F. Peterson (GA)
Michael J. Rankin (OH)
Terry L. Rubendall (PA)
Richard G. Shumacher (CA)
Kenneth D. Sisk (NC)
Michael L. Skeens (VA)
Steven R. Smith (ID)
Robert E. Soto (TX)
Darwin J. Thomas (PA)
Michael A. Zingarella (CT)

The exemptions are extended subject to the following conditions: (1) That each individual has a physical examination every year (a) by an ophthalmologist or optometrist who attests that the vision in the better eye continues to meet the requirements in 49 CFR 391.41(b)(10), and (b) by a medical examiner who attests that the individual is otherwise physically qualified under 49 CFR 391.41; (2) that each individual provides a copy of the ophthalmologist's or optometrist's report to the medical examiner at the time of the annual medical examination; and (3) that each individual provide a copy of the annual medical certification to the employer for retention in the driver's qualification file and retains a copy of the certification on his/her person while driving for presentation to a duly authorized Federal, State, or local enforcement official. Each exemption will be valid for two years unless rescinded earlier by FMCSA. The exemption will be rescinded if: (1) The person fails to comply with the terms and conditions of the exemption; (2) the

exemption has resulted in a lower level of safety than was maintained before it was granted; or (3) continuation of the exemption would not be consistent with the goals and objectives of 49 U.S.C. 31136(e) and 31315.

Basis for Renewing Exemptions

Under 49 U.S.C. 31315(b)(1), an exemption may be granted for no longer than two years from its approval date and may be renewed upon application for additional two year periods. In accordance with 49 U.S.C. 31136(e) and 31315, each of the 25 applicants has satisfied the entry conditions for obtaining an exemption from the vision requirements (66 FR 53826; 66 FR 66966; 67 FR 46016; 67 FR 57627; 68 FR 37197; 68 FR 48989; 69 FR 17263; 69 FR 17269; 69 FR 31447; 69 FR 31449; 69 FR 51346; 70 FR 42615; 71 FR 4194; 71 FR 6828; 71 FR 13450; 71 FR 19603; 71 FR 27033; 71 FR 50970; 72 FR 54971; 73 FR 6244; 73 FR 15255; 73 FR 16952; 73 FR 27014; 73 FR 28186; 73 FR 28187; 73 FR 75807; 74 FR 43220; 74 FR 57553; 74 FR 64125; 75 FR 9481; 75 FR 14656; 75 FR 14658; 75 FR 20882; 75 FR 22178; 75 FR 22179; 75 FR 25917; 75 FR 25918; 75 FR 25919; 75 FR 27623; 75 FR 27624; 75 FR 28684; 75 FR 39727; 75 FR 39729). Each of these 25 applicants has requested renewal of the exemption and has submitted evidence showing that the vision in the better eye continues to meet the requirement specified at 49 CFR 391.41(b)(10) and that the vision impairment is stable. In addition, a review of each record of safety while driving with the respective vision deficiencies over the past two years indicates each applicant continues to meet the vision exemption requirements. These factors provide an adequate basis for predicting each driver's ability to continue to drive safely in interstate commerce. Therefore, FMCSA concludes that extending the exemption for each renewal applicant for a period of two years is likely to achieve a level of safety equal to that existing without the exemption.

Request for Comments

FMCSA will review comments received at any time concerning a particular driver's safety record and determine if the continuation of the exemption is consistent with the requirements at 49 U.S.C. 31136(e) and 31315. However, FMCSA requests that interested parties with specific data concerning the safety records of these drivers submit comments by July 18, 2012.

FMCSA believes that the requirements for a renewal of an exemption under 49 U.S.C. 31136(e) and 31315 can be satisfied by initially granting the renewal and then requesting and evaluating, if needed, subsequent comments submitted by interested parties. As indicated above, the Agency previously published notices of final disposition announcing its decision to exempt these 25 individuals from the vision requirement in 49 CFR 391.41(b)(10). The final decision to grant an exemption to each of these individuals was made on the merits of each case and made only after careful consideration of the comments received to its notices of applications. The notices of applications stated in detail the qualifications, experience, and medical condition of each applicant for an exemption from the vision requirements. That information is available by consulting the above cited **Federal Register** publications.

Interested parties or organizations possessing information that would otherwise show that any, or all, of these drivers are not currently achieving the statutory level of safety should immediately notify FMCSA. The Agency will evaluate any adverse evidence submitted and, if safety is being compromised or if continuation of the exemption would not be consistent with the goals and objectives of 49 U.S.C. 31136(e) and 31315, FMCSA will take immediate steps to revoke the exemption of a driver.

Issued on: June 11, 2012.

Larry W. Minor,

Associate Administrator for Policy.

[FR Doc. 2012–14748 Filed 6–15–12; 8:45 am]

BILLING CODE 4910–EX–P

DEPARTMENT OF TRANSPORTATION

Maritime Administration

Reports, Forms and Recordkeeping Requirements; Agency Information Collection Activity Under OMB Review

AGENCY: Maritime Administration, DOT.

ACTION: Notice and request for comments.

SUMMARY: In compliance with the Paperwork Reduction Act of 1995, this notice announces that the Information Collection abstracted below has been forwarded to the Office of Management and Budget (OMB) for review and approval. The nature of the information collection is described as well as its expected burden. The **Federal Register** Notice with a 60-day comment period soliciting comments on the following collection of information was published on March 7, 2012 and comments were due by May 7, 2012. No comments were received.

DATES: Comments must be submitted on or before July 18, 2012.

FOR FURTHER INFORMATION CONTACT: Rita Jackson on (202) 366–0284 or Anne Dougherty on (202) 366–5469, Maritime Administration, Office of Maritime Workforce Development, 1200 New Jersey Avenue SE., Washington, DC 20590. EMail Addresses: *rita.jackson@dot.gov or anne.dougherty@dot.gov*.

SUPPLEMENTARY INFORMATION: Maritime Administration.

Title: Service Obligation Compliance Report and Merchant Marine Reserve U.S. Naval Reserve Annual Report.

OMB Control No.: 2133–0509.

Type of Request: Extension of currently approved collection.

Affective Public: Graduates of the U.S. Merchant Marine Academy and every subsidized State maritime academy graduate who receive a student incentive payment.

Forms: MA–930.

Abstract: Section 801 of the Merchant Marine Act, 1936, as amended (46 U.S.C. 53101, note), Chapters 513 and 515 of the United States Code imposes a service obligation on every graduate of the U.S. Merchant Marine Academy, and every subsidized State Maritime Academy graduate who received a student incentive payment. This mandatory service obligation is required to ensure the graduates are fulfilling their obligation to maintain a license as an officer in the merchant marine and report annually on their reserve status, training and employment.

Annual Estimated Burden Hours: 467 hours.

ADDRESSES: Send comments to the Office of Information and Regulatory Affairs, Office of Management and Budget, 725 17th Street NW., Washington, DC 20503, Attention: Maritime Administration Desk Officer. Alternatively, comments may be sent via 3-mail to the Office of Information and Regulatory Affairs (OIRA), Office of Management and Budget, at the following address: *oira.submissions@omb.eop.gov*.

Comments are invited on: Whether the proposed collection of information is necessary for the proper performance of the functions of the agency, including whether the information will have practical utility; the accuracy of the agency's estimate of the burden of the proposed information collection; ways to enhance the quality, utility and clarity of the information to be collected; and ways to minimize the burden of the collection of information

on respondents, including the use of automated collection techniques or other forms of information technology. A comment to OMB is best assured of having its full effect, if OMB receives it within 30 days of publication.

By Order of the Maritime Administrator.

Dated: June 12, 2012.

Julie P. Agarwal,

Secretary, Maritime Administration.

[FR Doc. 2012–14736 Filed 6–15–12; 8:45 am]

BILLING CODE 4910–81–P

FEDERAL REGISTER

Vol. 77 Monday,

No. 117 June 18, 2012

Part II

Environmental Protection Agency

40 CFR Parts 87 and 1068

Control of Air Pollution From Aircraft and Aircraft Engines; Emission Standards and Test Procedures; Final Rule

ENVIRONMENTAL PROTECTION AGENCY

40 CFR Parts 87 and 1068

[EPA–HQ–OAR–2010–0687; FRL–9678–1]

RIN 2060–AO70

Control of Air Pollution From Aircraft and Aircraft Engines; Emission Standards and Test Procedures

AGENCY: Environmental Protection Agency (EPA).

ACTION: Final rule.

SUMMARY: EPA is adopting several new aircraft engine emission standards for oxides of nitrogen (NO_X), compliance flexibilities, and other regulatory requirements for aircraft turbofan or turbojet engines with rated thrusts greater than 26.7 kilonewtons (kN). We also are adopting certain other requirements for gas turbine engines that are subject to exhaust emission standards as follows. First, we are clarifying when the emission characteristics of a new turbofan or turbojet engine model have become different enough from its existing parent engine design that it must conform to the most current emission standards. Second, we are establishing a new reporting requirement for manufacturers of gas turbine engines that are subject to any exhaust emission standard to provide us with timely and consistent emission-related information. Third, and finally, we are establishing amendments to aircraft engine test and emissions measurement procedures. EPA actively participated in the United Nations' International Civil Aviation Organization (ICAO) proceedings in which most of these requirements were first developed. These regulatory requirements have largely been adopted or are actively under consideration by its member states. By adopting such similar standards, therefore, the United States maintains consistency with these international efforts.

DATES: These final rules are effective on July 18, 2012. The incorporation by reference of certain publications listed in this regulation is approved by the Director of the Federal Register as of July 18, 2012.

ADDRESSES: EPA has established a docket for this action under Docket ID No. EPA–HQ–OAR–2010–0687. All documents in the docket are listed on the *http://www.regulations.gov* Web site. Although listed in the index, some information is not publicly available, e.g., confidential business information or other information whose disclosure is restricted by statute. Certain other material, such as copyrighted material, is not placed on the Internet and will be publicly available only in hard copy form. Publicly available docket materials are available electronically through *http://www.regulations.gov* or in hard copy at the EPA Docket Center, EPA/DC, EPA West, Room 3334, 1301 Constitution Ave. NW., Washington, DC. The Public Reading Room is open from 8:30 a.m. to 4:30 p.m., Monday through Friday, excluding legal holidays. The telephone number for the Public Reading Room is (202) 566–1744, and the telephone number for the Air Docket is 202–566–1742.

FOR FURTHER INFORMATION CONTACT: Richard Wilcox, Office of Transportation and Air Quality, Office of Air and Radiation, Environmental Protection Agency, 2000 Traverwood Drive, Ann Arbor, MI 48105; telephone number: (734) 214–4390; fax number: (734) 214–4816; email address: *wilcox.rich@epa.gov.*

SUPPLEMENTARY INFORMATION:

Does this action apply to me?

Entities potentially regulated by this action are those that manufacture and sell aircraft engines and aircraft in the United States. Regulated categories include:

Category	NAICS [a] Codes	SIC [b] Codes	Examples of potentially affected entities
Industry	336412	3724	Manufacturers of new aircraft engines.
Industry	336411	3721	Manufacturers of new aircraft.

[a] North American Industry Classification System (NAICS).
[b] Standard Industrial Classification (SIC) system code.

This table lists the types of entities that EPA is now aware could potentially be regulated by this action. Other types of entities not listed in the table could also be regulated. To determine whether your activities are regulated by this action, you should carefully examine the applicability criteria in 40 CFR 87.1 (part 87). If you have any questions regarding the applicability of this action to a particular entity, consult the person listed in the preceding **FOR FURTHER INFORMATION CONTACT** section.

Table of Contents

I. Executive Summary
II. Overview and Background
A. Contents of the Final Rule
B. EPA's Authority and Responsibilities Under the Clean Air Act
C. Interaction With the International Community
D. Brief History of EPA's Regulation of Aircraft Engine Emissions
E. Brief History of ICAO Regulation of Aircraft Engine Emissions
III. Why is EPA taking this action?
A. Inventory Contribution
B. Health, Environmental and Air Quality Impacts
1. Background on Ozone, PM and NO_X
a. What is ozone?
b. What is particulate matter?
c. What is NO_X?
2. Health Effects Associated With Exposure to Ozone, PM and NO_X
a. What are the health effects of ozone?
b. What are the health effects of PM?
c. What are the health effects of NO_X?
3. Environmental Effects Associated With Exposure to Ozone, PM and NO_X
a. Deposition of Nitrogen
b. Visibility Effects
c. Plant and Ecosystem Effects of Ozone
4. Impacts on Ambient Air Quality
IV. Details of the Final Rule
A. NO_X Standards for Newly-Certified Engines
1. Tier 6 NO_X Standards for Newly-Certified Engines
a. Numerical Emission Limits for Higher Thrust Engines
b. Numerical Emission Limits for Lower Thrust Engines
2. Tier 8 NO_X Standards for Newly-Certified Engines
a. Numerical Emission Limits for Higher Thrust Engines
b. Numerical Emission Limits for Lower Thrust Engines
B. Application of NO_X Standards for Newly-Manufactured Engines
1. Phase-In of the Tier 6 NO_X Standards for Newly-Manufactured Engines
2. Carryover of Previously Generated Emission Data
3. Exemptions and Exceptions From the Tier 6 Production Cutoff
a. New Provisions for Spare Engines
b. New Provisions for Engines Installed in New Aircraft
i. Time-Frame and Scope
ii. Production Limit
iii. Exemption Requests
iv. Coordination of Exemption Requests
v. Low-Volume, Time-Limited Transitional Exception Program
c. Voluntary Emission Offsets
4. Potential Phase-In of New Tier 8 NO_X Standards for Newly-Manufactured Engines

C. Application of Standards for Derivative Engines
D. Annual Reporting Requirement
E. Standards for Supersonic Aircraft Turbine Engines
F. Amendments to Test and Measurement Procedures
G. Possible Future Revisions to Emission Standards for New Technology Turbine Engines and Supersonic Aircraft Turbine Engines
V. Description of Other Revisions to the Regulatory Text
A. Applicability Issues
1. Military Engines
2. Noncommercial Engines
B. Non-Substantive Revisions
C. Clarifying Language for Regulatory Text
VI. Technical Feasibility and Cost Impacts
VII. Consultation With FAA
VIII. Public Participation
IX. Statutory Provisions and Legal Authority
X. Statutory and Executive Order Reviews
A. Executive Order 12866: Regulatory Planning and Review, and Executive Order 13563: Improving Regulation and Regulatory Review
B. Paperwork Reduction Act
C. Regulatory Flexibility Analysis
D. Unfunded Mandates Reform Act
E. Executive Order 13132: Federalism
F. Executive Order 13175: Consultation and Coordination With Indian Tribal Governments
G. Executive Order 13045: Protection of Children From Environmental Health & Safety Risks
H. Executive Order 13211: Actions That Significantly Affect Energy Supply, Distribution, or Use
I. National Technology Transfer Advancement Act
J. Executive Order 12898: Federal Actions To Address Environmental Justice in Minority Populations and Low Income Populations
K. Congressional Review Act
L. Executive Order 13609: Promoting International Regulatory Cooperation

I. Executive Summary

A. Purpose of the Regulatory Action

The primary purpose of this rule is to adopt new oxides of nitrogen (NO_X) emission standards for aircraft engines with rated thrusts greater than 26.7 kN thrust. These are mostly commercial passenger and freighter aircraft in common use at airports across the U.S. It does not include engines used on military aircraft. NO_X is strongly correlated with NO_2, for which EPA has established National Ambient Air Quality Standards (NAAQS), i.e., a criteria pollutant, and it is an important precursor gas in the formation of tropospheric ozone and secondary particulate matter which are common air pollutants in urban areas where airports are located. Currently, approximately 154 million people live in areas designated nonattainment for one or more of the current NAAQS. This rule will allow us to enforce in the U.S. the emission standards adopted by ICAO, and will be useful to states in attaining or maintaining the ozone, $PM_{2.5}$, and NO_2 NAAQS standards. This rule also contains several provisions to facilitate the implementation of EPA's aircraft engine emission regulations and related requirements. It is also important to note that adoption of the provisions in this rule meets U.S. treaty obligations under the Chicago Convention of 1944 by aligning our regulations with those in the International Civil Aviation Organization Annex 16, Volume II (adopted in 2010) that the U.S. helped to develop and support as part of the international process. This rule is being implemented under the authority provided in section 231 of the Clean Air Act (42 U.S.C. 7571), which directs the Administrator of EPA to, from time to time, propose aircraft engine emission standards applicable to the emission of any air pollutant from classes of aircraft engines which in her judgment causes or contributes to air pollution that may reasonably be anticipated to endanger public health or welfare.

B. Summary of Major Provisions of the Regulatory Action

The rule contains six major provisions. The first two provisions are new NO_X emission standards for newly certified-engine models. The first standards, Tier 6, take effect when this rule becomes effective. These represent approximately a 12 percent reduction from current Tier 4 levels. They were actually adopted by ICAO in 2005 with an implementation date in 2008. The second standards, Tier 8, were adopted by ICAO in 2008 and take effect in 2014. These represent approximately a 15 percent reduction from Tier 6 levels. As noted above, both tiers of emission standards are needed to address local air quality concerns (NAAQS) and to meet U.S. treaty obligations under the Chicago Convention. The third major provision is a production cut-off for newly-manufactured engines (as opposed to newly-certified engines) which basically requires that after December 31, 2012 all newly-manufactured engines must meet at least Tier 6 NO_X emission standards. This is also needed to meet our obligations under the Chicago Convention. The production cut-off is needed to ensure that the emission reductions envisioned by the emission standards are achieved on new production engines. The fourth major provision is related to potential exemptions or exceptions to the production cut-off requirement. These include revised provisions allowing manufacturers to request that FAA in consultation with EPA grant exemptions from the production cut-off for a designated number of engines within a prescribed time frame. These also include a low-volume, time-limited exception provision that will exclude several engines from the production cutoff. Both of these provisions help to assure an orderly transition to the new standards for engines needing more time to comply or for a few engines at the end of their production life. Finally, the rule includes a set of provisions which may be considered as minor if viewed separately, but collectively are important in upgrading EPA's regulations by incorporating some related agreements from our ICAO process and clarifying and improving existing provisions. Examples of this include special provisions for spare engines, provisions related to derivative engine models, test procedure specifications and reporting requirements. These changes are important for an effective implementation of the new requirements, and in many cases are also needed to meet our obligations under the Chicago Convention.

C. Costs and Benefits

This is not an economically significant regulatory action. Aircraft engines are international commodities used on aircraft manufactured and sold around the world. When developing new engine models manufacturers not only consider current emission requirements but also try to anticipate the stringency of future standards and respond appropriately. Engine manufacturers participated in the deliberations leading up to ICAO decisions on the aircraft engine NO_X emission standards and after the ICAO decisions they incorporated engine technology changes as needed to meet the new ICAO requirements. This helps to ensure the world wide acceptability of their products. Essentially all of these changes are now complete. Thus, while there is some cost to a manufacturer for responding to the new ICAO provisions, there is no significant further direct cost to the manufacturers created by EPA's adopting the requirements into U.S regulations. In fact, it is likely that our adopting these requirements facilitates the acceptance of U.S. type certificates by aircraft manufacturers and airlines around the world.

II. Overview and Background

This section summarizes the major provisions of the final rule for aircraft gas turbine engines. It also contains

background on the EPA's standard setting authority and responsibilities under the Clean Air Act, the connection between our emission standards and those of the international community, and a brief regulatory history for this source of emissions.

A. Contents of the Final Rule

We are adopting several new emission standards and other regulatory requirements for aircraft turbofan and turbojet engines [1] with rated thrusts greater than 26.7 kilonewtons (kN). First, we are establishing two new tiers of more stringent emission standards for oxides of nitrogen (NO_X).[2] The standards apply differently to two classes of these engines, i.e., ''newly-certified engines'' and ''newly-manufactured engines.'' The newly-certified engine standards apply to aircraft engines that have received a new type certificate and have never been manufactured prior to the effective date of the new emission standards. Requirements for newly-manufactured engines apply to aircraft engines that were previously certified and manufactured in compliance with preexisting standards, and they require manufacturers to either comply with the newer standards by a specified future date or cease production of the affected engine models. Newly-manufactured engine standards are also sometimes referred to as ''production cutoff'' standards. Second, we are adopting certain time-limited flexibilities, i.e., the potential for exemptions or exceptions as defined in the regulations for newly-manufactured engines that may not be able to comply with the first tier of the NO_X standards because of specific technical or economic reasons.[3]

We are also making a number of additional changes that would apply to a wider range of aircraft gas turbine engines [4] than those that would be subject to the new emission standards.[5] First, we are defining the meaning of a derivative engine for emissions certification purposes. The intent of this definition is to distinguish when the emission characteristics of a new turbofan engine model vary sufficiently from its existing parent engine design, and must show compliance with the emission standard for a newly-certificated engine. Second, we are establishing new reporting requirements for manufacturers that produce gas turbine engines subject to any exhaust emission standard. This will provide us with timely and consistent emission data and other information that is necessary to conduct emission inventory and air quality analyses and develop appropriate public policy for the aviation sector. Specifically, reports are required for turbofan engines with rated thrusts greater than 26.7 kN, which are subject to gaseous emission and smoke standards, in addition to turbofans less than or equal to 26.7 kN, and all turboprop engines, that are only subject to smoke standards.[6] Third, we are adopting minor amendments to the test and measurement procedures for aircraft engines. Finally, as described in section IV, we are making minor amendments to regulator provisions addressing definitions, acronyms and abbreviations, general applicability and requirements, exemptions, and incorporation by reference.

Most of these new regulatory requirements have already been adopted by the United Nation's International Civil Aviation Organization (ICAO). The requirements contained in this final rule bring the United States into alignment with the international standards and recommended practices.

B. EPA's Authority and Responsibilities Under the Clean Air Act

Section 231(a)(2)(A) of the Clean Air Act (CAA) directs the Administrator of EPA to, from time to time, propose aircraft engine emission standards applicable to the emission of any air pollutant from classes of aircraft engines which in her judgment causes or contributes to air pollution that may reasonably be anticipated to endanger public health or welfare. (See 42 U.S.C. 7571(a)(2)(A).) Section 231(a)(2)(B) directs EPA to consult with the Administrator of the Federal Aviation Administration (FAA) on such standards, and prohibits EPA from changing aircraft emission standards if such a change would significantly increase noise and adversely affect safety. 42 U.S.C. 7571(a)(2)(B)(i)–(ii). Section 231(a)(3) provides that after we propose standards, the Administrator shall issue such standards ''with such modifications as he deems appropriate.'' 42 U.S.C. 7571(a)(3). The U.S. Court of Appeals for the D.C. Circuit has held that this provision confers an unusually broad degree of discretion on EPA to adopt aircraft engine emission standards as the Agency determines are reasonable. *NACAA* v. *EPA,* 489 F.3d 1221 (D.C. Cir. 2007).

In addition, under CAA section 231(b) EPA is required to ensure, in consultation with the U.S. Department of Transportation (DOT), that the effective date of any standard provides the necessary time to permit the development and application of the requisite technology, giving appropriate consideration to the cost of compliance. 42 U.S.C. 7571(b). Section 232 then directs the FAA to prescribe regulations to ensure compliance with EPA's standards. 42 U.S.C. 7572. Finally, section 233 of the CAA vests the authority to promulgate emission standards for aircraft or aircraft engines only in EPA. States are preempted from adopting or enforcing any standard respecting aircraft engine emissions unless such standard is identical to EPA's standards. 42 U.S.C. § 7573. Section VI of today's final rule further discusses our coordination with DOT through the FAA.[7] It also describes DOT's responsibility under the CAA to enforce the aircraft emission standards established by EPA.

C. Interaction With the International Community

We began regulating the air pollution emissions from aircraft engines in 1973. Since that time, we have worked with the FAA and later with the International Civil Aviation Organization (ICAO) to develop international standards and other recommended practices pertaining to aircraft engine emissions. ICAO was established in 1944 by the United Nations (by the Convention on International Civil Aviation, the

[1] Turbofan and turbojet engines will be collectively referred to as turbofan engines hereafter for convenience.

[2] As previously mentioned, these new NO_X standards are identical to requirements established by ICAO. The stringency of any new emission standard is selected based on an assessment of the technical feasibility, cost, and environmental benefit of potential requirements. The NO_X standards we are promulgating today will not affect fuel economy or have any practical effect on CO_2 emissions. (See International Civil Aviation Organization (ICAO), ''Committee on Aviation Environmental Protection (CAEP), Eighth Meeting, Montreal, 1 to 12 February 2010, CAEP/8 NO_X Stringency Cost–Benefit Analysis Demonstration Using APMT–IMPACTS,'' CAEP/8–IP/30, December 1, 2010. A copy of this document is in docket number EPA–HQ–OAR–2010–0687.)

[3] These exemption or exception provisions are conceptually the same as the ICAO exemption provisions and provide the same regulatory flexibilities to all engine manufacturers.

[4] The term gas turbine engine includes turbofan, turbojet, and turboprop engines designs. The rated output for turbofan and turbojet engines is normally expressed as kilonewtons (kN) thrust. The rated output for turboprop engines is normally expressed as shaft horsepower (hp) or shaft kilowatt (kW).

[5] This includes turbofan and turbojet engines less than 26.7 kN thrust and all turboprop engines that are subject to any emission standard, e.g., smoke.

[6] As discussed further in section III.D., the voluntary emission data report to ICAO does not include turbofans at or below 26.7 kN or turboprops subject to any emission standard.

[7] The functions of the Secretary of Transportation under part B of title II of the Clean Air Act (§§ 231–234, 42 U.S.C. 7571–7574) have been delegated to the Administrator of the FAA. 49 CFR 1.47(g).

''Chicago Convention'') ''* * * in order that international civil aviation may be developed in a safe and orderly manner and that international air transport services may be established on the basis of equality of opportunity and operated soundly and economically.'' [8] ICAO's responsibilities include developing aircraft technical and operating standards, recommending practices, and generally fostering the growth of international civil aviation. The United States is currently one of 191 participating member States of ICAO.[9] [10]

In the interests of global harmonization and international air commerce, the Chicago Convention urges a high degree of uniformity by its member States. Nonetheless, the Convention also recognizes that member States may adopt their own unique airworthiness standards and that some may adopt standards that are more stringent than those agreed upon by ICAO.

The Convention has a number of other features that govern international commerce. First, States that wish to use aircraft in international transportation must adopt emission standards and other recommended practices that are at least as stringent as ICAO's standards. States may ban the use of any aircraft within their airspace that does not meet ICAO standards.[11] Second, States are required to recognize the airworthiness certificates of any State whose standards are at least as stringent as ICAO's standards, thereby assuring that aircraft of any member State will be permitted to operate in any other member State.[12] Third, and finally, to ensure that international commerce is not unreasonably constrained, a participating nation which elects to adopt more stringent standards is obligated to notify ICAO of the differences between its standards and ICAO standards.[13] However, if a nation sets tighter standards than ICAO, air carriers not based in that nation would only be required to comply with ICAO standards or more stringent standards imposed by their own nations, if applicable.

ICAO's Committee on Aviation Environmental Protection (CAEP) undertakes ICAO's technical work in the environmental field. The Committee is responsible for evaluating, researching, and recommending measures to the ICAO Council that address the environmental impact of international civil aviation. CAEP is composed of various task groups, work groups, and other committees whose contributing members include atmospheric, economic, aviation, environmental, and other professionals interested in aviation and environmental protection. At CAEP meetings, the United States is represented by the FAA, which plays an active role at these meetings.[14] EPA has historically been a principal participant in the development of U.S. policy in various ICAO/CAEP working groups and other international venues, assisting and advising FAA on aviation emissions, technology, and policy matters. If ICAO adopts a CAEP proposal for a new environmental standard, it then becomes part of ICAO standards and recommended practices (Annex 16 to the Chicago Convention).[15] [16]

D. Brief History of EPA's Regulation of Aircraft Engine Emissions

As mentioned above, we initially regulated gaseous exhaust emissions, smoke, and fuel venting from aircraft engines in 1973.[17] Since that time, we have occasionally revised those regulations. Two of these revisions are most pertinent to today's final rule. First, in a 1997 rulemaking, we made our emission standards and test procedures more consistent with those of ICAO for turbofan engines used in commercial aviation with rated thrusts greater than 26.7kN.[18] These ICAO requirements are generally referred to as CAEP/2 standards. (The numbering nomenclature for CAEP requirements is discussed in the next section.) That action included new NO_X emission standards for newly-manufactured commercial turbofan engines (those engines built after the effective date of the regulations that were already certified to pre-existing standards) [19] and for newly-certified commercial turbofan engines (those engine models that received their initial type certificate after the effective date of the regulations). It also included a CO emission standard for newly-manufactured commercial turbofan engines. Second, in our most recent rulemaking in 2005, we promulgated more stringent NO_X emission standards for newly-certified commercial turbofan engines.[20] That final rule brought the U.S. standards closer to alignment with ICAO CAEP/4 requirements that were effective in 2004. In ruling on a petition for judicial review of the 2005 rule filed by the National Association of Clean Air Agencies (NACAA), the U.S. Court of Appeals held that EPA's approach of tracking the ICAO standards was reasonable and permissible under the CAA. *NACAA* v. *EPA,* 489 F.3d 1221, 1230–32 (D.C. Cir. 2007).

E. Brief History of ICAO Regulation of Aircraft Engine Emissions

The first international standards and recommended practices for aircraft engine emissions was recommended by CAEP's predecessor, the Committee on Aircraft Engine Emissions (CAEE), and

[8] ICAO, ''Convention on International Civil Aviation,'' Ninth Edition, Document 7300/9, 2006. Copies of this document can be obtained from the ICAO Web site located at *www.icao.int.*

[9] Members of ICAO's Assembly are generally termed member States or contracting States. These terms are used interchangeably throughout this preamble.

[10] There are currently 191 Contracting States according to ICAO Web site located at *www.icao.int.*

[11] ICAO, ''Convention on International Civil Aviation,'' Article 87, Ninth Edition, Document 7300/9, 2006. Copies of this document can be obtained from the ICAO Web site located at *www.icao.int/icaonet/arch/doc/7300/7300_9ed.pdf.*

[12] ICAO, ''Convention on International Civil Aviation,'' Article 33, Ninth Edition, Document 7300/9, 2006. Copies of this document can be obtained from the ICAO Web site located at *www.icao.int/icaonet/arch/doc/7300/7300_9ed.pdf.*

[13] ICAO, ''Convention on International Civil Aviation,'' Articles 38, Ninth Edition, Document 7300/9, 2006. Copies of this document can be obtained from the ICAO Web site located at *www.icao.int/icaonet/arch/doc/7300/7300_9ed.pdf.*

[14] Pursuant to the President's memorandum of August 11, 1960 (and related Executive Order No. 10883 from 1960), the Interagency Group on International Aviation (IGIA) was established to facilitate coordinated recommendations to the Secretary of State on issues pertaining to international aviation. The DOT/FAA is the chair of IGIA, and as such, the FAA represents the U.S. on environmental matters at CAEP.

[15] ICAO, ''Aircraft Engine Emissions,'' International Standards and Recommended Practices, Environmental Protection, Annex 16, Volume II, Second Edition, July 2008. A copy of this document is in docket number EPA–HQ–OAR–2010–0687.

[16] CAEP develops new emission standards based on an assessment of the technical feasibility, cost, and environmental benefit of potential requirements.

[17] U.S. EPA, ''Emission Standards and Test Procedures for Aircraft;'' Final Rule, 38 FR 19088, July 17, 1973.

[18] U.S. EPA, ''Control of Air Pollution from Aircraft and Aircraft Engines; Emission Standards and Test Procedures;'' Final Rule, 62 FR 25356, May 8, 1997. While ICAO's standards were not limited to ''commercial'' aircraft engines, our 1997 standards were explicitly limited to commercial engines, as our finding that NO_X and CO emissions from aircraft engines cause or contribute to air pollution which may reasonably be anticipated to endanger public health or welfare was so limited, See 62 FR 25358. As explained later in section IV.A.2. of today's notice, we are expanding the scope of that finding and of our standards pursuant to section 231(a)(2)(A) of the Clean Air Act to include such emissions from both commercial and non-commercial aircraft engines based on the physical and operational similarities between commercial and noncommercial civilian aircraft and to bring our standards into full alignment with ICAO's.

[19] This does not mean that in 2005 we promulgated requirements for the re-certification or retrofit of existing in-use engines.

[20] U.S. EPA, ''Control of Air Pollution from Aircraft and Aircraft Engines; Emission Standards and Test Procedures;'' Final Rule, 70 FR 2521, November 17, 2005.

adopted by ICAO in 1981.[21] These standards limited aircraft engine emissions of HC, CO, and NO_X. In 1994, ICAO adopted a CAEP/2 proposal to tighten the original NO_X standard by 20 percent and amend the test procedures.[22] At the next CAEP meeting (CAEP/3) in 1995, the Committee recommended a further tightening of 16 percent and additional test procedure amendments, but in 1997 the ICAO Council rejected this stringency proposal and approved only the test procedure amendments. At the CAEP/4 meeting in 1998, the Committee adopted a similar 16 percent NO_X reduction proposal, which ICAO approved on 1998. The CAEP/4 standards applied only to new engine designs certified after December 31, 2003 (i.e., the requirements did not also apply to previously certified, newly-manufactured engines unlike the CAEP/2 standards). In 2004, CAEP/6 recommended a 12 percent NO_X reduction, which ICAO approved in 2005.[23] [24] The CAEP/6 standards applied to new engine designs (newly-certified models) certified after December 31, 2007. At the most recent meeting, CAEP/8 recommended a further tightening of the NO_X standards by 15 percent for newly-certified engines.[25] [26] The Committee also recommended that the CAEP/6 standards be applied to newly-manufactured engines. ICAO approved these recommendations in 2011.[27]

III. Why is EPA taking this action?

As mentioned above, section 231(a)(2)(A) of the CAA authorizes the EPA Administrator to ''from time to time, issue proposed emission standards applicable to the emission of any air pollution from any class or classes of aircraft or aircraft engines which in his judgment causes, or contributes to air pollution which may reasonably be anticipated to endanger public health or welfare.'' 42 U.S.C. 7571(a)(2)(A).

One of the principal components of aircraft exhaust emissions is NO_X, a precursor to the formation of tropospheric ozone and secondary PM.[28] Most commercial airports are located in urbanized areas [29] and many urbanized areas have ambient pollutant levels above the National Ambient Air Quality Standards (NAAQS) for ozone and fine particulate matter ($PM_{2.5}$) (i.e., they are in nonattainment for ozone and $PM_{2.5}$).[30] This section discusses the contribution of aircraft engines used in commercial service with rated thrusts greater than 26.7kN to the national NO_X emissions inventory and to NO_X emission inventories in selected ozone and $PM_{2.5}$ nonattainment areas, the potential effect of NO_X emissions in the upper atmosphere on ground level $PM_{2.5}$ in addition to the health and welfare impacts of NO_X and PM emissions.

A. Inventory Contribution

In contrast to all other mobile sources, whose emissions occur completely at ground level, the emissions from aircraft and aircraft engines can be divided into two flight regimes. The first regime includes the emissions that are released in the lower layer of the atmosphere and directly affect local and regional ambient air quality. These emissions generally occur at or below 3,000 feet above ground level, i.e., during the landing and takeoff (LTO) cycle. The aircraft operations that comprise an LTO cycle are: engine idle at the terminal gate (and sometimes during ground delays while holding for the active runway); taxiing between the terminal and the runway; take-off; climb-out; and approach to the airport. The second regime includes emissions that occur above 3,000 feet above ground level, known as non-LTO emissions. Collectively, the emissions associated with all ground and flight operations are generally referred to as full flight emissions.

In this section, we will discuss NO_X emission inventories for commercial turbine-engine aircraft, both nationally and for selected ozone and $PM_{2.5}$ nonattainment areas (NAAs). These inventories reflect emissions during the landing and takeoff cycle only. The most recent comprehensive analysis of historical and current LTO emissions from aircraft engines comes from a study undertaken for us by Eastern Research Group (ERG).[31] The study analyzed the national emissions of commercial aircraft operations in the United States, and showed that in the most recent year studied (2008), such aircraft LTO operations contributed about 97 thousand tons to the national NO_X inventory.[32] A summary of the national inventory of LTO NO_X emissions is shown in Table 1.

When these nationwide LTO emissions are compared to the total U.S. mobile source inventory for 2009, they account for less than one percent of the total. However, such a comparison may be a bit misleading, as it only includes those aircraft emissions that occur below 3,000 feet altitude, while comparing them to the entirety of other mobile source emissions. In the U.S., LTO emissions account for only about ten percent of full flight NO_X emissions. When considering full flight aircraft emissions (i.e., including both LTO and non-LTO emissions), the contribution of aircraft to the total mobile source NO_X inventory is approximately 7.7 percent.[33] It is also worth noting that these LTO emissions are more localized in that they occur near airports, which are mostly within urban areas.

[21] ICAO, Foreword of ''Aircraft Engine Emissions,'' International Standards and Recommended Practices, Environmental Protection, Annex 16, Volume II, Third Edition, July 2008. Copies of this document can be obtained from the ICAO Web site at *www.icao.int.*

[22] CAEP conducts its work over a period of years. Each work cycle is numbered sequentially and that identifier is used to differentiate the results from one CAEP to another by convention. The first technical meeting on aircraft emission standards was CAEP's successor, i.e., CAEE. The first meeting of CAEP, therefore, is referred to as CAEP/2.

[23] CAEP/5 did not address new aircraft engine emission standards.

[24] ICAO, ''Aircraft Engine Emissions,'' Annex 16, Volume II, Third Edition, July 2008, Amendment 4 effective on July 20, 2008. Copies of this document can be obtained from the ICAO Web site at *www.icao.int.*

[25] CAEP/7 did not address new aircraft engine emission standards.

[26] ICAO, ''Committee on Aviation Environmental Protection (CAEP), Report of the Eighth Meeting, Montreal, February 1–12, 2010,'' CAEP/8–WP/80. A copy of this document is in docket number EPA–HQ–OAR–2010–0687.

[27] ICAO, ''Aircraft Engine Emissions,'' Annex 16, Volume II, Third Edition, July 2008, Amendment 7 effective on July 18, 2011. Copies of this document can be obtained from the ICAO Web site at *www.icao.int.*

[28] Ground-level ozone, the main ingredient in smog, is formed by complex chemical reactions of volatile organic compounds (VOC) and NO_X in the presence of heat and sunlight. Standards that reduce NO_X emissions will help address ambient ozone levels. They can also help reduce particulate matter (PM) levels as NO_X emissions can also be part of the secondary formation of PM. See Section II.B below.

[29] According to Airport Council International—North America and similar FAA databases, most commercial operations occur at airports that are in or near large cities or urbanized areas. There are about 130 commercial airports in 78 ozone and fine particulate nonattainment areas (based on the nonattainment areas status of 2008). There are about 325 commercial airports in the U.S.

[30] For a current list of nonattainment areas see: *http://www.epa.gov/oar/oaqps/greenbk/index.html.*

[31] ''Historical Assessment of Aircraft Landing and Take-off Emissions (1986–2008),'' Eastern Research Group, May 2011. A copy of this document can be found in public docket EPA–HQ–OAR–2010–0687.

[32] The cumulative LTO NO_X reduction associated with the new NO_X standards is projected to be about 100,000 tons from 2014 to 2030 (2014 is the implementation date of the CAEP/8 NO_X standards). See ''Historical Assessment of Aircraft Landing and Take-off Emissions (1986–2008),'' Eastern Research Group, May 2011. A copy of this document can be found in public docket EPA–HQ–OAR–2010–0687.

[33] U.S. EPA, ''Comparison of Aircraft LTO and Full Flight NO_X Emissions to Total Mobile Source NO_X Emissions,'' memorandum from John Mueller, Assessment and Standards Division, Office of Transportation and Air Quality, to docket EPA–HQ–OAR–2010–0687, May 10, 2011.

TABLE 1—CURRENT NATIONAL NO_X EMISSIONS FROM COMMERCIAL AIRCRAFT

Aircraft category	2008 Total NO_X (thousand tons)
Air Carrier	86
Commuter/Air Taxi	11
Total Commercial	97

In addition, it is important to assess the contribution of commercial aircraft LTO NO_X emissions on a local level, especially in areas containing or adjacent to airports. The historical analysis conducted by ERG also included an assessment of selected ozone nonattainment areas (NAAs). The NAAs selected for study were chosen as follows. First, the 25 NAAs with airports which had high commercial traffic volumes were identified. Second, the 25 NAAs with the largest population were identified. These lists were combined. However, there was some overlap, and this led to a total of 40 NAAs being identified for the study.[34] These NAAs collectively include 200 airports, accounting for about 70 percent of commercial air traffic operations.

Of the 40 NAAs originally studied by ERG as previously described, we identified the 30 areas that were in nonattainment for ozone or $PM_{2.5}$ as of March 30, 2012.[35] Current (2008) and projected (2020) NO_X emissions for these 30 ozone and $PM_{2.5}$ NAAs, as well as the percent contribution of aircraft to total mobile source inventories (as compared to 2005 and 2020 mobile source inventories), are shown in Table 2.[36 37 38] The relative contribution of aircraft in any given NAA varies based on activity in other transportation and industrial sectors. As can be seen from this table, expected growth in aircraft operations in many of these areas combined with anticipated reductions in NO_X emissions from other mobile source categories results in the growth of the relative contribution of aircraft LTO emissions to mobile source NO_X emissions in NAAs.

TABLE 2—NO_X EMISSIONS IN SELECTED OZONE AND $PM_{2.5}$ NONATTAINMENT AREAS

Nonattainment area	2008 Total NO_X (tons)	2008 Aircraft percent of mobile source NO_X	2020 Aircraft percent of mobile source NO_X
Atlanta, GA	5,808	2.6	8.2
Baltimore, MD	1,148	1.3	4.4
Boston—including MA and NH NAAs	2,032	1.0	2.7
Charlotte-Gastonia-Rock Hill, NC-SC	1,917	2.6	10.0
Chicago-Gary-Lake County, IL-IN	6,007	1.8	5.0
Cleveland-Akron-Lorain, OH	680	0.5	1.3
Dallas-Fort Worth, TX	3,880	1.7	6.9
Denver-Boulder-Greeley-Fort Collins-Loveland, CO	2,649	2.5	7.1
Detroit-Ann Arbor, MI	2,312	1.1	3.0
Greater Connecticut, CT	405	0.8	2.4
Houston-Galveston-Brazoria, TX	3,045	1.3	3.4
Indianapolis, IN	1,089	1.4	3.0
Las Vegas, NV	2,308	6.0	15.8
Los Angeles South Coast Air Basin, CA	6,479	1.5	4.5
Louisville, KY-IN	1,211	1.9	6.2
Milwaukee-Racine, WI	557	0.9	3.2
New York-N. New Jersey-Long Island, NY-NJ-CT	10,093	2.3	6.3
Philadelphia-Wilmington-Atlantic City, PA-NY-MD-DE	2,308	1.0	2.8
Phoenix-Mesa, AZ	2,298	1.4	3.3
Pittsburgh-Beaver Valley, PA	480	0.5	1.1
Providence (entire State), RI	232	1.0	2.3
Riverside County (Coachella Valley), CA	70	0.2	0.5
Sacramento Metro, CA	603	1.0	2.0
Salt Lake City, UT	1,235	4.4	14.1
San Diego, CA	1,035	1.4	3.4
San Francisco Bay Area, CA	4,405	2.7	6.7
San Joaquin Valley, CA	74	0.0	0.1
Seattle-Tacoma, WA	1,958	1.4	3.9
St. Louis, MO-IL	810	0.6	1.6
Washington, DC-MD-VA	2,983	2.0	6.2

Table 3 shows how commercial aircraft operations are projected to rise in the future on a nationwide basis. As operations increase, the inventory impact of these aircraft on national and local NO_X inventories will also increase.

[34] Although 41 NAAs were studied, the non-aircraft emissions data source that the aircraft emissions were compared to for this analysis did not distinguish between the Boston NAA in Massachusetts and the greater Boston NAA in New Hampshire. Thus, aircraft emissions from those two NAAs were combined into a single NAA for the purpose of this analysis, yielding 40 NAAs for study.

[35] For a current list of nonattainment areas see: *http://www.epa.gov/oar/oaqps/greenbk/index.html.*

[36] U.S. EPA, ''Relative Contribution of Aircraft to Total Mobile Source NO_X Emissions in Selected Ozone Nonattainment Areas,'' memorandum from John Mueller, Assessment and Standards Division, Office of Transportation and Air Quality, to docket EPA–HQ–OAR–2010–0687, May 10, 2011.

[37] U.S. EPA, ''Addendum to 'Relative Contribution of Aircraft to Total Mobile Source NO_X Emissions in Selected Ozone Nonattainment Areas,' '' memorandum from John Mueller, Assessment and Standards Division, Office of Transportation and Air Quality, to docket EPA–HQ–OAR–2010–0687, May 17, 2011.

[38] U.S. EPA, ''Update to 'Relative Contribution of Aircraft to Total Mobile Source NO_X Emissions in Selected Ozone Nonattainment Areas,' '' memorandum from John Mueller, Assessment and Standards Division, Office of Transportation and Air Quality, to docket EPA–HQ–OAR–2010–0687, April 30, 2012.

TABLE 3—CURRENT AND PROJECTED COMMERCIAL AIRCRAFT OPERATIONS

Year	Air carrier operations (millions)	Commuter/air taxi operations (millions)	Total commercial operations (millions)	Total increase in commercial operations over 2008 (percent)
2008	14.1	13.8	27.9	
2020	16.5	14.1	30.5	9
2030	20.6	16.0	36.6	31

Source: December 2010 FAA TAF, which is located at *http://aspm.faa.gov/main/taf.asp.*

B. Health, Environmental and Air Quality Impacts

NO_X emissions from aircraft and other mobile and stationary sources contribute to the formation of ozone. In addition, NO_X emissions at low altitude also react in the atmosphere to form secondary fine particulate matter ($PM_{2.5}$), particularly ammonium nitrate. In the following sections we discuss the adverse health and welfare effects associated with NO_X emissions, in addition to the current and projected levels of ozone and PM across the country. The ICAO NO_X standards with which we are aligning will help reduce ambient ozone and secondary PM levels and thus will help areas with airports achieve or maintain attainment with the National Ambient Air Quality Standards (NAAQS).[39]

1. Background on Ozone, PM and NO_X

a. What is ozone?

Ground-level ozone pollution is typically formed through reactions involving VOC and NO_X in the lower atmosphere in the presence of sunlight. These pollutants, often referred to as ozone precursors, are emitted by many types of pollution sources, such as highway and nonroad motor vehicles and engines, power plants, chemical plants, refineries, makers of consumer and commercial products, industrial facilities, and smaller area sources.

The science of ozone formation, transport, and accumulation is complex.[40] Ground-level ozone is produced and destroyed in a cyclical set of chemical reactions, many of which are sensitive to temperature and sunlight. When ambient temperatures and sunlight levels remain high for several days and the air is relatively stagnant, ozone and its precursors can build up and result in more ozone than typically occurs on a single high-temperature day. Ozone and its precursors can be transported hundreds of miles downwind from precursor emissions, resulting in elevated ozone levels even in areas with low local VOC or NO_X emissions.

b. What is particulate matter?

The discussion includes $PM_{2.5}$ because the NO_X emitted by aircraft engines can react in the atmosphere to form nitrate, a component of $PM_{2.5}$. Particulate matter is a generic term for a broad class of chemically and physically diverse substances. It can be principally characterized as discrete particles that exist in the condensed (liquid or solid) phase spanning several orders of magnitude in size. Since 1987, EPA has delineated that subset of inhalable particles small enough to penetrate to the thoracic region (including the tracheobronchial and alveolar regions) of the respiratory tract (referred to as thoracic particles). The current PM NAAQS uses $PM_{2.5}$ as the indicator for fine particles (with $PM_{2.5}$ generally referring to particles with a nominal mean aerodynamic diameter less than or equal to 2.5 micrometers (μm)), and use PM_{10} as the indicator for purposes of regulating the coarse fraction of PM_{10} (referred to as thoracic coarse particles or coarse-fraction particles; generally including particles with a nominal mean aerodynamic diameter greater than 2.5 μm and less than or equal to 10 μm, or $PM_{10-2.5}$). Ultrafine particles are a subset of fine particles, generally less than 100 nanometers (0.1 μm) in diameter.

Fine particles are produced primarily by combustion processes and by transformations of gaseous emissions (e.g., SO_X, NO_X and VOC) in the atmosphere. The chemical and physical properties of $PM_{2.5}$ may vary greatly with time, region, meteorology, and source category. Thus, $PM_{2.5}$ may include a complex mixture of different components including sulfates, nitrates, organic compounds, elemental carbon and metal compounds. These particles can remain in the atmosphere for days to weeks and travel hundreds to thousands of kilometers.

c. What is NO_X?

Nitrogen dioxide (NO_2) is a member of the NO_X family of gases. Most NO_2 is formed in the air from the oxidation of nitric oxide (NO) emitted when fuel is burned at a high temperature. NO_2 and its gas phase oxidation products can dissolve in water droplets and further oxidize to form nitric acid which reacts with ammonia to form nitrates, an important component of ambient PM. NO_X and VOC are the two major precursors of ozone. The health effects of ozone, ambient PM and NO_X are covered in section II.B.2.

2. Health Effects Associated With Exposure to Ozone, PM and NO_X

a. What are the health effects of ozone?

The health and welfare effects of ozone are well documented and are assessed in EPA's 2006 Air Quality Criteria Document and 2007 Staff Paper.[41] [42] People who are more susceptible to effects associated with exposure to ozone can include children,

[39] The discussion of PM health and welfare effects throughout this notice relates exclusively to the effects of the NO_X emission standards on the formation of secondary PM from nitrate formation in the atmosphere. Presently, there are no emission standards for PM emitted directly from aircraft turbine engines. The current and planned future work programs for CAEP/ICAO are developing PM test procedures and information to characterize the amount and type of these emissions from aircraft engines that are in production. Ultimately, this information will be used to assess the need for an aircraft turbine engine PM standard (i.e., whether PM emissions from aircraft cause or contribute to air pollution which may reasonably be anticipated to endanger public health or welfare), with standard setting as appropriate.

[40] U.S. EPA Air Quality Criteria for Ozone and Related Photochemical Oxidants (Final). U.S. Environmental Protection Agency, Washington, DC, EPA 600/R–05/004aF–cF, 2006. This document is available in Docket EPA–HQ–OAR–2010–0687. This document may be accessed electronically at: *http://www.epa.gov/ttn/naaqs/standards/ozone/s_o3_cr_cd.html.*

[41] U.S. EPA Air Quality Criteria for Ozone and Related Photochemical Oxidants (Final). U.S. Environmental Protection Agency, Washington, DC, EPA 600/R–05/004aF–cF, 2006. This document is available in Docket EPA–HQ–OAR–2010–0687. This document may be accessed electronically at: *http://www.epa.gov/ttn/naaqs/standards/ozone/s_o3_cr_cd.html.*

[42] U.S. EPA (2007) Review of the National Ambient Air Quality Standards for Ozone, Policy Assessment of Scientific and Technical Information. OAQPS Staff Paper.EPA–452/R–07–003. This document is available in Docket EPA–HQ–OAR–2010–0687. This document is available electronically at: *http:www.epa.gov/ttn/naaqs/standards/ozone/s_o3_cr_sp.html.*

the elderly, and individuals with respiratory disease such as asthma. Those with greater exposures to ozone, for instance due to time spent outdoors (e.g., children and outdoor workers), are of particular concern. Ozone can irritate the respiratory system, causing coughing, throat irritation, and breathing discomfort. Ozone can reduce lung function and cause pulmonary inflammation in healthy individuals. Ozone can also aggravate asthma, leading to more asthma attacks that require medical attention and/or the use of additional medication. Thus, ambient ozone may cause both healthy and asthmatic individuals to limit their outdoor activities. In addition, there is suggestive evidence of a contribution of ozone to cardiovascular-related morbidity and highly suggestive evidence that short-term ozone exposure directly or indirectly contributes to non-accidental and cardiopulmonary-related mortality, but additional research is needed to clarify the underlying mechanisms causing these effects. In a report on the estimation of ozone-related premature mortality published by the National Research Council (NRC), a panel of experts and reviewers concluded that short-term exposure to ambient ozone is likely to contribute to premature deaths and that ozone-related mortality should be included in estimates of the health benefits of reducing ozone exposure.[43] Animal toxicological evidence indicates that with repeated exposure, ozone can inflame and damage the lining of the lungs, which may lead to permanent changes in lung tissue and irreversible reductions in lung function. The respiratory effects observed in controlled human exposure studies and animal studies are coherent with the evidence from epidemiologic studies supporting a causal relationship between acute ambient ozone exposures and increased respiratory-related emergency room visits and hospitalizations in the warm season. In addition, there is suggestive evidence of a contribution of ozone to cardiovascular-related morbidity and non-accidental and cardiopulmonary mortality.

b. What are the health effects of PM?

Scientific studies show ambient PM is associated with a series of adverse health effects. These health effects are discussed in detail in EPA's Integrated Science Assessment for Particulate Matter (ISA).[44] The ISA summarizes health effects evidence associated with both short-term and long-term exposures to $PM_{2.5}$, $PM_{10-2.5}$, and ultrafine particles.

The ISA concludes that health effects associated with short-term exposures (hours to days) to ambient $PM_{2.5}$ include mortality, cardiovascular effects, such as altered vasomotor function and myocardial ischemia, and hospital admissions and emergency department visits for ischemic heart disease and congestive heart failure, and respiratory effects, such as exacerbation of asthma symptoms in children and hospital admissions and emergency department visits for chronic obstructive pulmonary disease and respiratory infections.[45] The ISA notes that long-term exposure (months to years) to $PM_{2.5}$ is associated with the development/progression of cardiovascular disease, premature mortality, and respiratory effects, including reduced lung function growth in children, increased respiratory symptoms, and asthma development.[46] The ISA concludes that the currently available scientific evidence from epidemiologic, controlled human exposure, and toxicological studies supports a causal association between short- and long-term exposures to $PM_{2.5}$ and cardiovascular effects and premature mortality. Furthermore, the ISA concludes that the collective evidence supports likely causal associations between short- and long-term $PM_{2.5}$ exposures and respiratory effects. The ISA also concludes that the scientific evidence is suggestive of a causal association for reproductive and developmental effects including respiratory-related infant mortality and cancer, mutagenicity, and genotoxicity and long-term exposure to $PM_{2.5}$.[47]

For $PM_{10-2.5}$, the ISA concludes that the current evidence is suggestive of a causal relationship between short-term exposures and premature mortality, cardiovascular effects, and respiratory effects. Data are inadequate to draw conclusions regarding the health effects associated with long-term exposure to $PM_{10-2.5}$.

For ultrafine particles, the ISA concludes that there is suggestive evidence of a causal relationship between short-term exposures and cardiovascular effects, such as changes in heart rhythm and blood vessel function. It also concludes that there is suggestive evidence of association between short-term exposure to ultrafine particles and respiratory effects. Data are inadequate to draw conclusions regarding the health effects associated with long-term exposure to ultrafine particles.

c. What are the health effects of NO_X?

Information on the health effects of NO_2 can be found in the EPA Integrated Science Assessment (ISA) for Nitrogen Oxides.[48] The EPA has concluded that the findings of epidemiologic, controlled human exposure, and animal toxicological studies provide evidence that is sufficient to infer a likely causal relationship between respiratory effects and short-term NO_2 exposure. The ISA concludes that the strongest evidence for such a relationship comes from epidemiologic studies of respiratory effects including symptoms, emergency department visits, and hospital admissions. The ISA also draws two broad conclusions regarding airway responsiveness following NO_2 exposure. First, the ISA concludes that NO_2 exposure may enhance the sensitivity to allergen-induced decrements in lung function and increase the allergen-induced airway inflammatory response following 30-minute exposures of asthmatics to NO_2 concentrations as low as 0.26 ppm. Second, exposure to NO_2 has been found to enhance the inherent responsiveness of the airway to subsequent nonspecific challenges in controlled human exposure studies of asthmatic subjects. Small but significant increases in non-specific airway hyperresponsiveness were reported following 1-hour exposures of asthmatics to 0.1 ppm NO_2. Enhanced airway responsiveness could have important clinical implications for asthmatics since transient increases in airway responsiveness following NO_2 exposure have the potential to increase symptoms and worsen asthma control. Together, the epidemiologic and experimental data sets form a plausible, consistent, and coherent description of

[43] National Research Council (NRC), 2008. *Estimating Mortality Risk Reduction and Economic Benefits From Controlling Ozone Air Pollution.* The National Academies Press: Washington, DC A copy of this document is in docket number EPA–HQ–OAR–2010–0687.

[44] U.S. EPA (2009) Integrated Science Assessment for Particulate Matter, EPA 600/R–08/139F. A copy of this document is in docket number EPA–HQ–OAR–2010–0687.

[45] U.S. EPA (2009). Integrated Science Assessment for Particulate Matter (Final Report). U.S. Environmental Protection Agency, Washington, DC, EPA/600/R–08/139F, 2009. Section 2.3.1.1.

[46] U.S. EPA (2009). Integrated Science Assessment for Particulate Matter (Final Report). U.S. Environmental Protection Agency, Washington, DC, EPA/600/R–08/139F, 2009. page 2–12, Sections 7.3.1.1 and 7.3.2.1.

[47] U.S. EPA (2009). Integrated Science Assessment for Particulate Matter (Final Report). U.S. Environmental Protection Agency, Washington, DC, EPA/600/R–08/139F, 2009. Section 2.3.2.

[48] U.S. EPA (2008). *Integrated Science Assessment for Oxides of Nitrogen—Health Criteria (Final Report).* EPA/600/R–08/071. Washington, DC: U.S. EPA. A copy of this document is in docket number EPA–HQ–OAR–2010–0687.

a relationship between NO_2 exposures and an array of adverse health effects that range from the onset of respiratory symptoms to hospital admission.

Although the weight of evidence supporting a causal relationship is somewhat less certain than that associated with respiratory morbidity, NO_2 has also been linked to other health endpoints. These include all-cause (non-accidental) mortality, hospital admissions or emergency department visits for cardiovascular disease, and decrements in lung function growth associated with chronic exposure.

3. Environmental Effects Associated With Exposure to Ozone, PM and NO_X

a. Deposition of Nitrogen

Emissions of NO_X from aircraft engines contribute to atmospheric deposition of nitrogen in the U.S. Atmospheric deposition of nitrogen contributes to acidification, altering biogeochemistry and affecting animal and plant life in terrestrial and aquatic ecosystems across the United States. The sensitivity of terrestrial and aquatic ecosystems to acidification from nitrogen deposition is predominantly governed by geology. Prolonged exposure to excess nitrogen deposition in sensitive areas acidifies lakes, rivers and soils. Increased acidity in surface waters creates inhospitable conditions for biota and affects the abundance and nutritional value of preferred prey species, threatening biodiversity and ecosystem function. Over time, acidifying deposition also removes essential nutrients from forest soils, depleting the capacity of soils to neutralize future acid loadings and negatively affecting forest sustainability. Major effects include a decline in sensitive forest tree species, such as red spruce (*Picea rubens*) and sugar maple (*Acer saccharum*); and a loss of biodiversity of fishes, zooplankton, and macro invertebrates.

In addition to the role nitrogen deposition plays in acidification, nitrogen deposition also leads to nutrient enrichment and altered biogeochemical cycling. In aquatic systems increased nitrogen can alter species assemblages and cause eutrophication. In terrestrial systems nitrogen loading can lead to loss of nitrogen sensitive lichen species, decreased biodiversity of grasslands, meadows and other sensitive habitats, and increased potential for invasive species.

Adverse impacts on soil chemistry and plant life have been observed for areas heavily influenced by atmospheric deposition of nutrients, metals and acid species, resulting in species shifts, loss of biodiversity, forest decline damage to forest productivity and reductions in ecosystem services. Potential impacts also include adverse effects to human health through ingestion of contaminated vegetation or livestock (as in the case for dioxin deposition), reduction in crop yield, and limited use of land due to contamination.

Atmospheric deposition of pollutants can reduce the aesthetic appeal of buildings and culturally important articles through soiling, and can contribute directly (or in conjunction with other pollutants) to structural damage by means of corrosion or erosion.[49] Atmospheric deposition may affect materials principally by promoting and accelerating the corrosion of metals, by degrading paints, and by deteriorating building materials such as concrete and limestone. Particles contribute to these effects because of their electrolytic, hygroscopic, and acidic properties, and their ability to adsorb corrosive gases (principally sulfur dioxide).

b. Visibility Effects

NO_X emissions contribute to visibility impairment in the U.S. through the formation of secondary $PM_{2.5}$.[50] Visibility impairment is caused by light scattering and absorption by suspended particles and gases. Visibility is important because it has direct significance to people's enjoyment of daily activities in all parts of the country. Individuals value good visibility for the well-being it provides them directly, where they live and work, and in places where they enjoy recreational opportunities. Visibility is also highly valued in significant natural areas, such as national parks and wilderness areas, and special emphasis is given to protecting visibility in these areas. For more information on visibility see the final 2009 PM ISA.[51]

c. Plant and Ecosystem Effects of Ozone

Elevated ozone levels contribute to environmental effects, with impacts to plants and ecosystems being of most concern. Ozone can produce both acute and chronic injury in sensitive species depending on the concentration level and the duration of the exposure. Ozone effects also tend to accumulate over the growing season of the plant, so that even low concentrations experienced for a longer duration have the potential to create chronic stress on vegetation. Ozone damage to plants includes visible injury to leaves and impaired photosynthesis, both of which can lead to reduced plant growth and reproduction, resulting in reduced crop yields, forestry production, and use of sensitive ornamentals in landscaping. In addition, the impairment of photosynthesis, the process by which the plant makes carbohydrates (its source of energy and food), can lead to a subsequent reduction in root growth and carbohydrate storage below ground, resulting in other, more subtle plant and ecosystems impacts. These latter impacts include increased susceptibility of plants to insect attack, disease, harsh weather, interspecies competition and overall decreased plant vigor. The adverse effects of ozone on forest and other natural vegetation can potentially lead to species shifts and loss from the affected ecosystems, resulting in a loss or reduction in associated ecosystem goods and services. Lastly, visible ozone injury to leaves can result in a loss of aesthetic value in areas of special scenic significance like national parks and wilderness areas. The final 2006 Ozone Air Quality Criteria Document presents more detailed information on ozone effects on vegetation and ecosystems.

4. Impacts on Ambient Air Quality

The aircraft NO_X emission standards we are promulgating would affect ambient concentrations of air pollutants. Nationally, levels of $PM_{2.5}$, ozone, and NO_X are declining.[52] However as of March 30, 2012, over 15 million people live in areas designated nonattainment for one or more of the current NAAQS.[53] These numbers do not include the people living in areas where there is a future risk of failing to maintain or attain the NAAQS.

States with ozone nonattainment areas are required to take action to bring

[49] U.S. EPA. (2005). Review of the National Ambient Air Quality Standards for Particulate Matter: Policy Assessment of Scientific and Technical Information, OAQPS Staff Paper. Retrieved on April 9, 2009 from *http://www.epa.gov/ttn/naaqs/standards/pm/data/pmstaffpaper_20051221.pdf.*

[50] U.S. EPA. (2004). *Air Quality Criteria for Particulate Matter (AQCD).* Volume I Document No. EPA600/P–99/002aF and Volume II Document No. EPA600/P–99/002bF. Washington, DC: U.S. Environmental Protection Agency. Retrieved on March 18, 2009 from *http://cfpub.epa.gov/ncea/cfm/recordisplay.cfm?deid=87903.*

[51] U.S. EPA (2009). Integrated Science Assessment for Particulate Matter (Final Report). U.S. Environmental Protection Agency, Washington, DC, EPA/600/R–08/139F, 2009. A copy of this document is in docket number EPA–HQ–OAR–2010–0687.

[52] U. S. EPA (2010) Our Nation's Air: Status and Trends through 2008. Office of Air Quality Planning and Standards, Research Triangle Park, NC. Publication No. EPA 454/R–09–002. This document can be accessed electronically at: *http://www.epa.gov/airtrends/2010/.*

[53] U.S. EPA, 2012. *http://www.epa.gov/oar/oaqps/greenbk/index.html*

those areas into attainment. The attainment date assigned to an ozone nonattainment area is based on the area's classification. Most ozone nonattainment areas are required to attain the 1997 8-hour ozone NAAQS in the 2007 to 2013 time frame and then to maintain it thereafter.[54] We anticipate designating areas for the 2008 ozone standards in late spring 2012; thus, the attainment dates for areas designated nonattainment for the 2008 8-hour ozone NAAQS would likely be in the 2015 to 2032 timeframe, depending on the severity of the problem in each area.[55]

Areas designated as not attaining the 1997 $PM_{2.5}$ NAAQS will need to attain the 1997 standards in the 2010 to 2015 time frame, and then maintain compliance with them thereafter. The 2006 24-hour $PM_{2.5}$ nonattainment areas will be required to attain the 2006 24-hour $PM_{2.5}$ NAAQS in the 2014 to 2019 time frame and then be required to maintain the 2006 24-hour $PM_{2.5}$ NAAQS thereafter.

EPA has already adopted many emission control programs that are expected to reduce ambient ozone and $PM_{2.5}$ levels and which will assist in reducing the number of areas that fail to achieve the NAAQS. Even so, our air quality modeling projects that in 2030 as many as 10 counties with a population of over 30 million may not attain the 2008 ozone standard of 0.075 ppm (75 ppb) without additional controls.[56] In addition, our air quality modeling projects that in 2030 at least four counties with a population of nearly 7 million may not attain the 1997 annual $PM_{2.5}$ standard of 15 $\mu g/m^3$ and 22 counties with a population of over 33 million may not attain the 2006 24-hour $PM_{2.5}$ standard of 35 $\mu g/m^3$ without additional controls.[57] [58] These numbers do not account for those areas that are close to (e.g., within 10 percent of) the standards. These areas, although not violating the standards, would also benefit from any reductions in NO_X ensuring long-term maintenance of the NAAQS.

In summary, the aircraft NO_X reductions resulting from these new aircraft engine emission standards will be useful to states in attaining or maintaining the ozone, $PM_{2.5}$, and NO_2 NAAQS standards.

IV. Details of the Final Rule

The following is a description of the regulations being adopted in this final rule, with any changes from the proposal also noted. The descriptions also include our response to the most significant comments received on the proposal. A full summary of the comments and our responses are contained in the response to comments document for the rule that is available in the public docket for this action.[59]

We are establishing two different levels or ''tiers'' of increasingly more stringent NO_X emission standards for gas turbofan engines with maximum rated thrusts greater than 26.7 kilonewtons (kN).[60] Each of the tiers apply to newly-certified engines. Newly-certified aircraft engines are those that would receive a new type certificate after the effective date of the applicable standards. Such engine types or models would not have begun production prior to the effective date of the new requirement.[61]

We are also requiring newly-manufactured engines to comply with the first tier of the two tiers of standards. Newly-manufactured aircraft engines are those that have been previously certified and manufactured in compliance with preexisting standards, and will continue to be produced after the effective date of a new applicable standard. Normally, these newly-manufactured engines must comply with the same NO_X limits as newly-certified engines, but at a later date or cease production.[62] The end of this ''phase-in'' period for the newly-manufactured engine standards is sometimes referred to as a ''production cutoff.''. Again, we are adopting only the first of the two new tiers of NO_X standards for newly-manufactured engines. These provisions are described in detail below.

Five other regulatory features are being established in this final rule. First, we are revising provisions for certain time-limited flexibilities, i.e., potential exemptions, for newly-manufactured engines that may not be able to comply with the first tier of the new NO_X standards because of specific technical or economic reasons.[63] Second, we are defining ''derivative engine'' for emissions certification purposes. The intent of this definition is to distinguish when the emission characteristics of a new turbofan engine model vary substantially from its existing parent engine design, and must show compliance with the emission standards for a newly-certificated engine. Third, we are establishing new CO and NO_X standards for turbofan engines that are used to propel supersonic aircraft. These standards were adopted by ICAO in the 1980s, but were not previously added to our HC emission standard for these engines. Promulgating these standards meets our treaty obligation under the Convention on International Civil Aviation as previously described

[54] The Los Angeles South Coast Air Basin 8-hour ozone nonattainment area and the San Joaquin Valley Air Basin 8-hour ozone nonattainment area are designated as extreme and will have to attain before June 15, 2024. The Sacramento, Coachella Valley and Houston 8-hour ozone nonattainment areas are designated as severe and will have to attain by June 15, 2019. In addition, the Western Mojave 8-hour ozone nonattainment area has requested to be reclassified as severe. This request has not yet been acted on.

[55] U.S. EPA, 2012. Proposed Rule—Implementation of the 2008 National Ambient Air Quality Standards for Ozone: Nonattainment Area Classifications Approach, Attainment Deadlines and Revocation of the 1997 Ozone Standards for Transportation Conformity Purposes. (77 FR 8107, February 14, 2012).

[56] U.S. EPA (2010). Regulatory Impact Analysis: Final Rulemaking To Establish Greenhouse Gas Emission Standards and Fuel Efficiency Standards for Medium- and Heavy-Duty Engines and Vehicles. Chapter 8: Health and Environmental Impacts. EPA 420–R–11–901.

[57] U.S. EPA (2010). Regulatory Impact Analysis: Final Rulemaking To Establish Greenhouse Gas Emission Standards and Fuel Efficiency Standards for Medium- and Heavy-Duty Engines and Vehicles. Chapter 8: Health and Environmental Impacts. EPA 420–R–11–901.

[58] These figures are based on the results of EPA computer modeling, which is not affected by the upcoming 2008 ozone NAAQS nonattainment designations.

[59] U.S. Environmental Protection Agency, ''Summary and Analysis of Comments: Control of Air Pollution From Aircraft and Aircraft Engines,'' Office of Transportation and Air Quality, EPA–420–R–12–011, May 2012. A copy of this document is in docket number EPA–HQ–OAR–2010–0687.

[60] The standards will apply to engines used in commercial and noncommercial aviation for which the FAA issues airworthiness certificates, e.g., non-revenue, general aviation service. The vast majority of these engines are used in commercial applications.

[61] ICAO standards describe newly-certified engines as ''* * * engines of a type or model for which the date of manufacture of the *first individual production model* was after. * * *'' the effective date of the emission standards. See ICAO, ''Aircraft Engine Emissions,'' Annex 16, Volume II, Third Edition, July 2008, Amendment 4 effective on July 20, 2008. Copies of this document can be obtained from the ICAO Web site at *www.icao.int.* The term ''first individual production model'' means the first engine ever produced of a unique model or type.

[62] The standards for newly-manufactured engines are described in general regulatory terms as the date that the type or model was *first* certified and produced in conformance with specific emission standards, *and* the date beyond which an individual engine meeting those same requirements cannot be made. So ICAO standards describe newly-manufactured engines as ''* * * engines of a type or model for which the date of manufacture of the *first individual production model* was after. * * *'' the effective date of the applicable standards, and ''* * * for which the date of manufacture of *the individual engine* was on or before. * * *'' a specific date that is later than the first effective date of the standards. See ICAO, ''Aircraft Engine Emissions,'' Annex 16, Volume II, Third Edition, July 2008, Amendment 4 effective on July 20, 2008. Copies of this document can be obtained from the ICAO Web site at *www.icao.int.*

[63] These apply only to the first tier of NO_X standards. We are not adopting a production cutoff for the second tier of standards.

in section I.C. Fourth, we are making several changes to the emission testing and measurement procedures in our regulations that are intended to implement ICAO's Annex 16 and to incorporate the entire annex in our regulations by reference. Finally, as described in section IV, we are amending the current regulatory provisions that address definitions, acronyms and abbreviations, general applicability and requirements, exemptions, and incorporation by reference. These amendments are intended to clarify requirements, make them more consistent with other parts of the program, update the text to be consistent with current standard language conventions, or remove obsolete provisions.

As discussed further below, with the exception of the annual reporting requirement described in section III.D, the amendments reflect those changes that were previously adopted by ICAO.

This final rule also is consistent with our authority and obligations under the CAA as described in section I.B. More specifically, the technical feasibility and cost of the emission standards were well documented by our own analyses and CAEP as described later in this section and in section V, Technical Feasibility, Costs, and Emission Benefits. We think that the final rule provides adequate lead time for the development and application of the requisite technology with appropriate consideration to the cost of compliance. We have consulted with the Department of Transportation through the FAA regarding lead time, noise, safety, and the technical feasibility of the new standards. Today's final rule is also consistent with U.S. treaty obligations under the Chicago Convention as described in section I.C., because the requirements are consistent with current ICAO standards.

Except to the extent needed to make our standards conform to ICAO's standards by making them applicable to both commercial and non-commercial engines, we are not revising exhaust emission standards for HC, CO, or smoke. All engines subject to the new NO_X standards would also continue to be subject to the existing HC, CO, and smoke standards. It is worth emphasizing that although we are including these existing HC, CO, and smoke standards in a new section 87.23, which would also contain the new Tier 6 and Tier 8 NO_X standards, we are not actually adopting new standards for these three pollutants, since under the current form of part 87 these HC, CO and smoke standards would already continue to apply to new engine types subject to future revised NO_X standards.

As discussed above, we are adopting a new naming convention in this preamble and the regulatory text to more easily distinguish between the tiers of increasingly more stringent NO_X emission standards. This convention is also consistent with the numeric identifier that CAEP uses to differentiate the CAEP work cycle that produces new NO_X standards. (The CAEP naming convention is described in section I.E.) As a result, the first tier of NO_X standards, which correspond to CAEP/6, are referred to as Tier 6 in the remainder of today's notice. The second tier of standards is referred to as Tier 8, which correspond to CAEP/8. We are also incorporating the new naming convention in the regulations for the existing NO_X emission standards, i.e., Tier 0, Tier 2, and Tier 4. There is no material change to the existing NO_X standards themselves, except to the extent that when today's final rule becomes effective, the existing NO_X standards would be superseded by Tier 6 standards.

We acknowledge that this new naming convention is a change from the past practice of not describing aircraft engine emission standards as tiers. However, we believe the new naming scheme is a valuable tool that makes referring to individual NO_X standards much easier. It is also similar to the terminology we use for other mobile source sectors that are subject to environmental regulation and for which standards have become more stringent or have otherwise been amended over time.

A. NO_X Standards for Newly-Certified Engines

We are adopting two different tiers of increasingly stringent NO_X standards. These standards would apply for all for newly-certified turbofan aircraft engines with maximum rated thrusts greater than 26.7 kN.[64] (See section III.B for a discussion of how these standards apply for newly-manufactured engines that are not considered to be newly certified.) The numerical value of the applicable standard for an individual engine model is defined by the engine's thrust level and pressure ratio. Simply stated, the pressure ratio is the numerical ratio of the air pressure entering the engine to the air pressure at the entrance to the combustor, i.e., after the air has passed through the compressor section of the engine.[65] The new tiers are described separately below.

1. Tier 6 NO_X Standards for Newly-Certified Engines

This first tier of new standards is equivalent to the CAEP/6 NO_X limits that were adopted by ICAO and became internationally applicable after December 31, 2007. Given that aircraft turbofan engines are international commodities, engine manufacturers introduced engine models after that date that demonstrate compliance with these international standards, or are already planning to do so for upcoming engine designs. Based on this, our evaluation of the necessary lead time, and the lack of any comments on this aspect of the proposal, this tier of standards takes effect immediately upon the effective date of this final rule.

The basic form of the NO_X standards for turbofan engines is different for higher- and lower-rated thrust engines. Higher output engines are defined as having rated thrusts equal to or greater than 89 kN, while lower output engines are defined as having rated thrusts less than 89 kN but greater than 26.7 kN. The new Tier 6 NO_X standards for each of these power groupings are described separately below.

a. Numerical Emission Limits for Higher Thrust Engines

The Tier 6 NO_X standards for newly-certified gas turbine engines with rated thrusts more than 89 kN are differentiated by pressure ratio as shown below.

- For engines with a pressure ratio of 30 or less:

g/kN rated output = 16.72 + (1.4080 * engine pressure ratio)

- For engines with a pressure ratio of more than 30 but less than 82.6:

g/kN rated output = −1.04 + (2.0 * engine pressure ratio)

- For engines with a pressure ratio of 82.6 or more:

g/kN rated output = 32 + (1.6 * engine pressure ratio)

The new Tier 6 NO_X standards for these higher thrust engines are presented in Figure 1 along with the previous EPA NO_X standards, which were based on CAEP/4, for comparison.

[64] There are no gaseous emission standards, e.g., NO_X, for gas turbine engines with maximum rated thrusts equal to or less than 26.7 kN. These engines are, however, subject to smoke and fuel venting standards.

[65] The combustor is a chamber where a mixture of fuel and air is burned to form very hot, expanding gases. As these gases move through the combustion chamber, the walls of the combustor are cooled with dilution air to prevent thermal damage. Dilution air is also used to tailor the gas' temperature profile as it exits the combustor so that the final temperatures will not exceed the allowable limit at the turbine inlet.

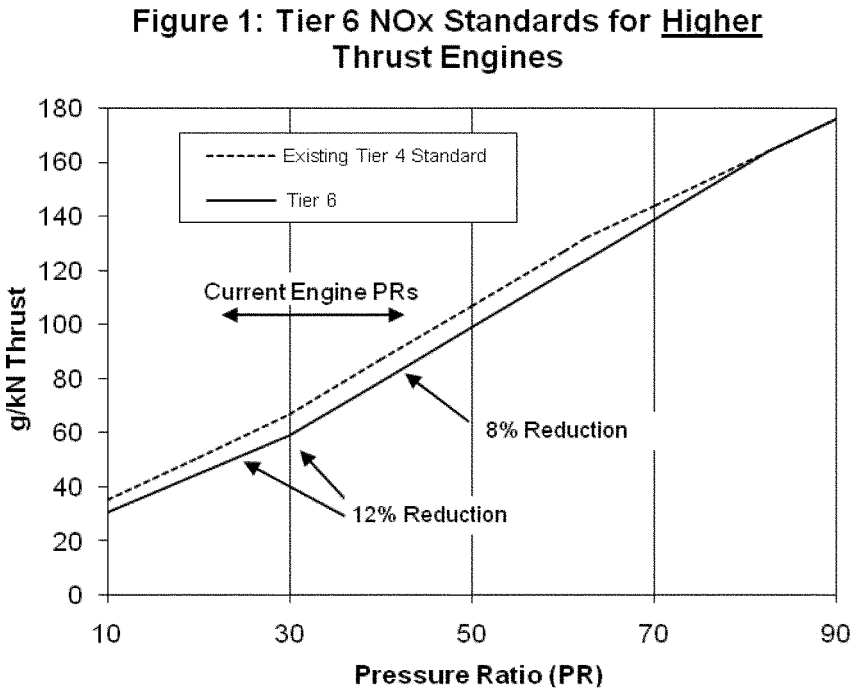

As a matter of convention, the relative stringency from one CAEP standard to another is expressed relative to a pressure ratio of 30, because the percentage reduction is usually inconsistent across all of the possible pressure ratios, which otherwise makes a simple comparison difficult. Using that convention, the Tier 6 standards (CAEP/6) are referred to as being 12 percent more stringent than the existing EPA NO_X Tier 4 standards (CAEP/4). The relative stringency can also be illustrated at other pressure ratios. At pressure ratios less than 30 the reductions are also 12 percent. At pressure ratios above 30, however, the percent reduction decreases as the pressure ratio is increased. Based on the figure, the percent reduction for current technology engines ranges from about 8 to 12 percent.

b. Numerical Emission Limits for Lower Thrust Engines

The new Tier 6 NO_X standards for newly-certified gas turbine engines with rated thrusts between 26.7 and equal to or less than 89.0 kN are differentiated by both pressure ratio and rated thrust as shown below.

- For engines with a pressure ratio of 30 or less:

g/kN rated output = 38.5486 + (1.6823 * engine pressure ratio) − (0.2453 * kN rated thrust) − (0.00308 * engine pressure ratio * kN rated thrust)

- For engines with a pressure ratio of more than 30 but less than 82.6:

g/kN rated output = 46.1600 + (1.4286 * engine pressure ratio) − (0.5303 * kN rated thrust) + (0.00642 * engine pressure ratio * kN rated thrust)

In developing the corresponding NO_X standards for lower thrust engines, CAEP recognized the technical challenges that physically smaller-sized engines sometimes present relative to incorporating some of the lowest NO_X technology approaches, which are otherwise available to their larger counterparts. These technical difficulties are well documented and increase progressively as size is reduced (from around 89 kN).[66] For example, the relatively small combustor space and section height of these engines creates constraints on the use of low NO_X fuel-staged combustor concepts which inherently require the availability of greater flow path cross-sectional area than conventional combustors. Also, fuel-staged combustors need more fuel injectors, and this need is not compatible with the relatively smaller total fuel flows of lower thrust engines. (Reductions in fuel flow per nozzle are difficult to attain without having clogging problems due to the small sizes of the fuel metering ports.) In addition, lower thrust engine combustors have an inherently greater liner surface-to-combustion volume ratio, and this requires increased wall cooling air flow. Thus, less air will be available to obtain acceptable turbine inlet temperature distribution and for emissions control.[67] With these technological constraints in mind, CAEP fashioned the CAEP/6 NO_X standards across the range of thrusts represented by low-thrust engines to become comparatively less stringent, i.e., CAEP/6 relative to CAEP/4, as the rated output and physical size of the engines decrease. We agree with this approach.

As mentioned, the new Tier 6 standards depend on an individual engine's rated thrust and pressure ratio. With two variables in the calculation, the standards cannot be represented in a simple figure, i.e., no single line graph showing the standards for all engines within the thrust range is possible as it was for higher thrust engines. Regardless of this complexity, however, some general observations are useful to characterize the Tier 6 NO_X standards for lower thrust engines based on the engine size versus technological challenge described in the previous paragraph.

Comparing the new lower and higher thrust standards at 89 kN, which is the demarcation point between the two sets of standards, shows that the standards for lower thrust engines are numerically equivalent to the limit for higher thrust

[66] ICAO/CAEP, ''Report of Third Meeting, Montreal, Quebec, December 5–15, 1995,'' Document 9675, CAEP/3. A copy of this paper can be found in Docket EPA–HQ–OAR–2010–0687.

[67] ICAO, ''Combined Report of the Certification and Technology Subgroups,'' section 2.3.6.1, CAEP Working Group 3 (Emissions). Presented by the Chairman of the Technology Subgroup, Third Meeting, Bonn, Germany, June 1995. A copy of this paper can be found in Docket EPA–HQ–OAR–2010–0687.

engines at each pressure ratio. This is as expected because the engine sizes and ability to incorporate low-NO_X technologies are the same at 89.0 kN delineation point.

Again focusing only on 89 kN engines, the new Tier 6 standards represent a 12 percent reduction from the existing EPA Tier 4 (CAEP/4 based standards) for pressure ratios of 30 or less as shown below in Figure 2. This includes the region represented by almost all current engine designs. At higher pressure ratios, the relative numerical reduction is progressively less because the slope of the two standards is essentially the same.

Figure 2: Tier 6 NOx Standards for Lower Thrust Engines Rated at 89.0 kN

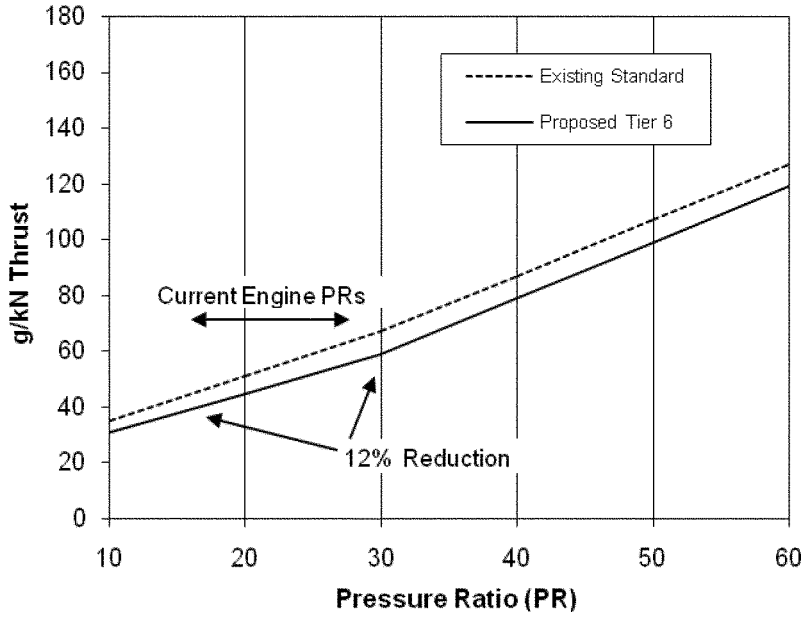

At other thrust ratings the percent reduction between the new Tier 6 and existing EPA NO_X standards at any pressure ratio becomes progressively smaller as thrust decreases. This is illustrated in Figure 3 for a pressure ratio of 30. This pressure ratio was chosen for the example because, as before, the relative stringency of CAEP NO_X standards is generally compared at this point as a matter of convention. As shown in the figure for current engines, the reduction ranges from 12 percent at the upper end of the thrust range to 0 percent at the lower end of the range. The pattern is similar for the other pressure ratios. Only the actual numerical value for percentage reduction at 89 kN, as shown on the far right of the figure, *may* vary by pressure ratio, as described at the beginning of this paragraph. However, in the region of pressure ratios represented by today's engines, the results are identical to those shown in the figure, i.e., a 12 percent reduction at 89 kN decreasing to 0 percent at 26.7 kN.

Figure 3: Tier 6 NOx Standards for Lower Thrust Engines At Pressure Ratio 30

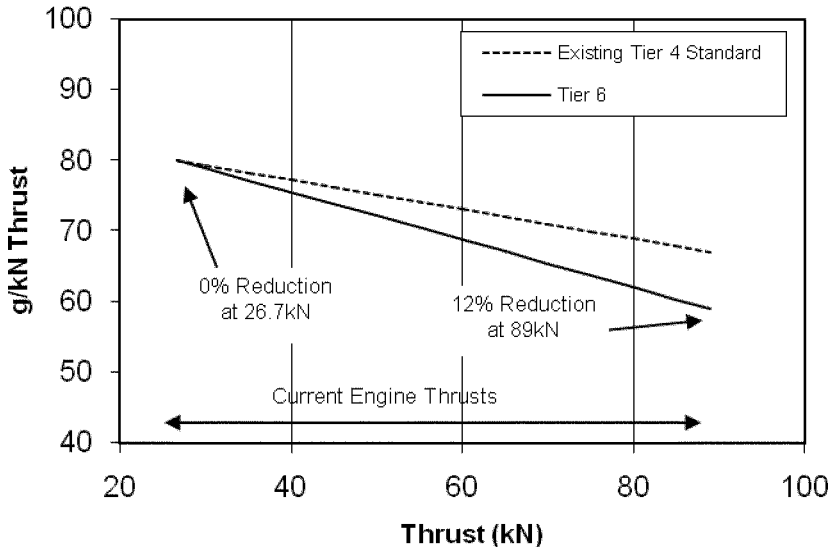

2. Tier 8 NO_X Standards for Newly-Certified Engines

The second tier of new standards, i.e., Tier 8, are equivalent to the NO_X limits that were most recently recommended at CAEP/8 in February 2010 for adoption by ICAO.[68] The CAEP/8 recommended standards have a recommended applicable date after December 31, 2013. As discussed further in section V of today's notice, we agree with CAEP that this provides engine manufacturers with adequate lead time to respond to these more stringent NO_X standards considering the technical feasibility and cost associated with the requirements.[69] Therefore, this tier of standards takes effect on January 1, 2014. As with the new Tier 6 NO_X standards, the basic form of the new Tier 8 standards for turbofan engines is different for higher- and lower-rated thrust engines. Higher output engines are defined as having rated thrusts equal to or greater than 89 kN, while lower output engines are defined as having rated thrusts less than 89 kN but greater than 26.7 kN. The longer-term standards for each of these power grouping are described separately below.

a. Numerical Emission Limits for Higher Thrust Engines

The new Tier 8 NO_X standards for newly-certified turbofan engines with rated thrusts of 89 N or more are differentiated by pressure ratio as shown below.

- For engines with a pressure ratio of 30 or less:

g/kN rated output = 7.88 + (1.4080 * engine pressure ratio)

- For engines with a pressure ratio of more than 30 but less than 104.7:

g/kN rated output = −9.88 + (2.0 * engine pressure ratio)

- For engines with a pressure ratio of 104.7 or more:

g/kN rated output = 32 + (1.6 * engine pressure ratio)

The new Tier 8 NO_X standards for these higher thrust engines are presented in Figure 4 along with the new Tier 6 standards for comparison.

[68] CAEP/7 did not adopt new aircraft engine NO_X standards.

[69] Leadtime in this context refers to the time between CAEP adoption of a new emission standard and the effective date of the requirement. ICAO emission standards are global in nature and designed to provide engine manufacturers with adequate time to develop and deploy the requisite technology. Manufacturers produce engines that comply with new ICAO standards to ensure their products can be sold and used worldwide even in the absence of specific U.S. regulations. Based on this response to the ICAO standard, we find that there is also adequate leadtime between EPA's promulgation of the new requirement and the associated effective date. No public comments pertaining to leadtime were received.

Figure 4: Tier 8 NOx Standards for Higher Thrust Engines

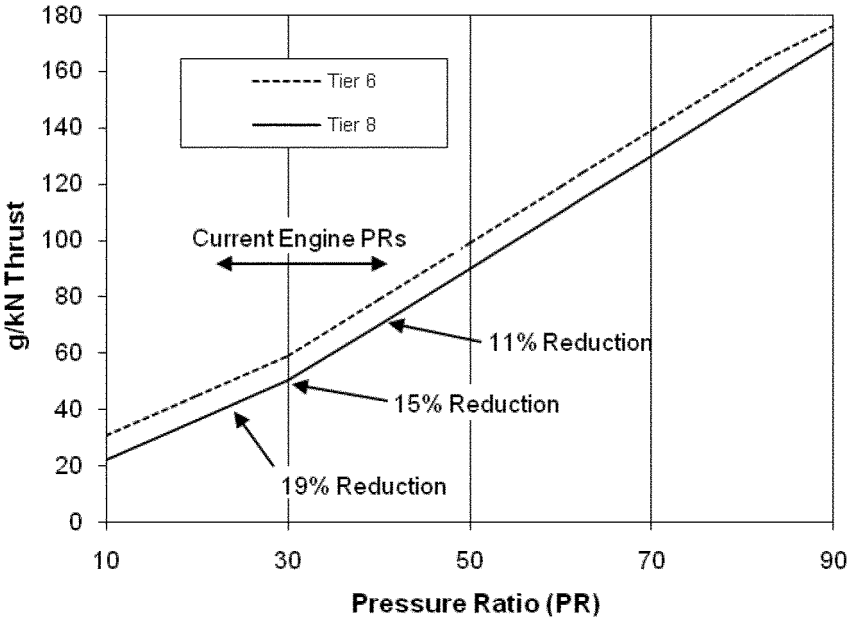

As noted previously, as a matter of convention the relative stringency from one CAEP standard to another is generally expressed relative to a pressure ratio of 30. Using that convention, the new Tier 8 standards (CAEP/8) are referred to as being 15 percent more stringent than the new Tier 6 NO_X standards (CAEP/6). The relative stringency can also be illustrated at other pressure ratios. At pressure ratios less than 30 the reductions increase. At pressure ratios above 30, however, the percent reduction decreases. Based on the figure, the percent reduction for current engine designs range from about 11 to 19 percent.

b. Numerical Emission Limits for Lower Thrust Engines

The new Tier 8 NO_X standards for newly-certified gas turbine engines with rated thrusts between 26.7 but less than or equal to 89.0 kN are differentiated by both pressure ratio and rated thrust as shown below.

- For engines with a pressure ratio of 30 or less:

g/kN rated output = 40.052 + (1.5681 * engine pressure ratio) − (0.3615 * kN rated thrust) − (0.0018 * engine pressure ratio * kN rated thrust)

- For engines with a pressure ratio of more than 30 but less than 104.7:

g/kN rated output = 41.9435 + (1.505 * engine pressure ratio) − (0.55823 * kN rated thrust) + (0.005562 * engine pressure ratio * kN rated thrust)

In developing the corresponding CAEP/8 NO_X standards for low thrust engines, CAEP recognized the technical challenges that physically smaller-sized engines represent relative to incorporating some of the lowest NO_X technology, which is otherwise available to their larger counterparts. These technical difficulties were described in the previous section for the Tier 6 low-thrust engine standards.

Also as previously described, no single line graph showing the standards for all engines within the thrust range is possible as it was for higher thrust engines, because the equations have two variables. However, some general observations are useful to characterize the new Tier 8 NO_X standards for lower thrust engines based on the engine size versus technological challenge described in the previous paragraph. First, the new Tier 8 NO_X standards for lower thrust engines are numerically equivalent to the limit for higher thrust engines across all pressure ratios at the highest rating of 89 kN, where the engine sizes and ability to incorporated low-NO_X technologies are comparable. This same characteristic was observed for the Tier 6 standards. Second, as shown below in Figure 5 for 89 kN engines, at this thrust rating the new Tier 8 standards represents a 15 percent reduction from the Tier 6 standards for a pressure ratio of 30. However, within the region of pressure ratios for all current engine designs, the reductions range from 19 to 23 percent.

Figure 5: Tier 8 NOx Standards for Lower Thrust Engines Rated at 89.0 kN

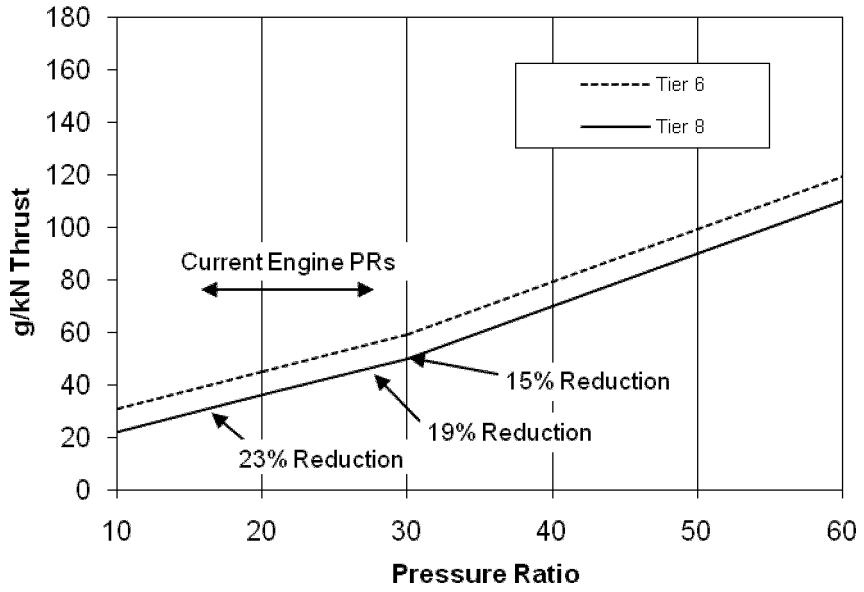

Third, at other thrust ratings the percent reduction between the new Tier 6 and Tier 8 standards at any pressure ratio becomes progressively smaller as thrust decreases. This is illustrated in Figure 6 for a pressure ratio of 30, following the convention described above. Also as shown in the figure for current engines, the reduction ranges from 15 percent at the upper end of the thrust range to 5 percent at the lower end of the range. While not depicted in a figure, the pattern is similar for the other pressure ratios. However, the actual numerical values for percentage reductions at both ends of the thrust range, i.e., 26.7 to 89 kN, may vary by pressure ratio. In the region of pressure ratios represented by today's engines, the results are identical to those shown in Figure 6 at 26.7 kN, i.e., a 5 percent reduction at all pressure ratios for that thrust rating. However, percent reductions increase linearly up to a maximum 23 percent reduction for 89 kN engines with pressure ratios of about 15.

Figure 6: Tier 8 NOx Standards for Lower Thrust Engines at Pressure Ratio 30

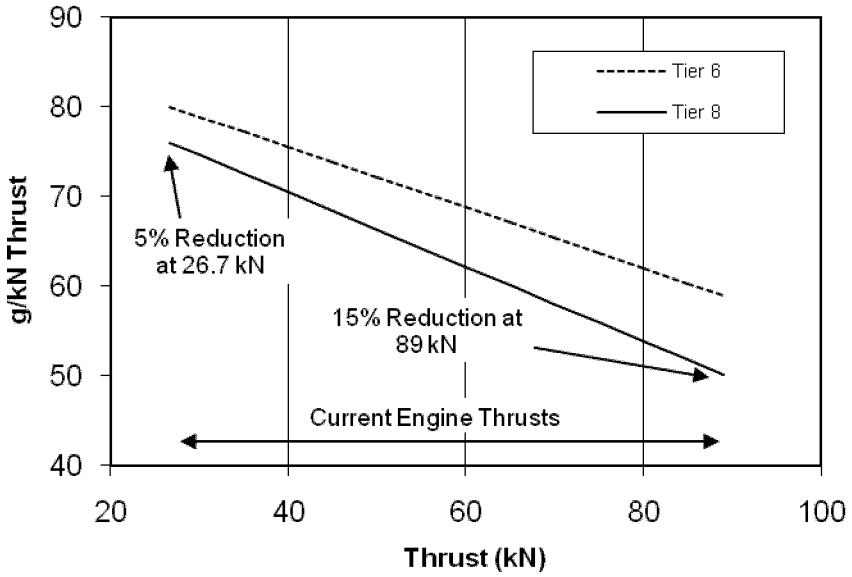

B. Application of the Tier 6 NO_X Standards to Newly-Manufactured Engines

This section describes the application of the new Tier 6 NO_X standards to newly-manufactured engines, and our amended temporary flexibilities for newly-manufactured engines that show significant problems complying with these requirements. Also, consistent with CAEP/8, we are not applying the new Tier 8 NO_X standards to newly-manufactured engines at this time. This section concludes with a description of future efforts to examine such a possibility.

1. Phase-In of the Tier 6 NO_X Standards for Newly-Manufactured Engines

As described above, the new Tier 6 NO_X standards apply to all engine types or models that receive a *new* type certificate after the effective date of the final rule. We are also phasing in these same NO_X limits for newly-manufactured engines for engine models (and their derivatives for emissions certification purposes) that were originally certified to less stringent requirements (i.e., Tier 2 or Tier 4) and were already being produced for installation on new aircraft prior to the effective date of the final rule.[70] As a result, manufacturers need to bring newly-manufactured engines of these previously certified models into compliance with the applicable Tier 6 standards by a future date or cease production of those engine models.[71] As we discussed and described in our analysis of the need for a CAEP/6 production cutoff during the CAEP process, establishing a date certain for compliance with any emission standard is necessary to ensure that the full benefits of newer, more stringent requirements will be achieved in a reasonable time.[72] We are, however, adopting certain limited flexibilities for engines that cannot be made compliant because of specific technical or economic reasons, as discussed later in this section.

As described in the proposal, the effective date of January 1, 2013[73] for the newly-manufactured engine standards is consistent with the expected market demand for these previously certified engine types. Historically, engine manufacturers have often responded to the adoption of more stringent NO_X standards by bringing older engine types into compliance with the newer requirements well before the required date in anticipation of the likely market demand, or planning for the orderly withdrawal of these engines from the marketplace. Information developed during the ICAO process in 2008 and 2009[74] [75] [76] and our more recent discussions with manufacturers indicate that: (1) All but a few models are already compliant with CAEP/6 standards, (2) nearly without exception, all current production models will meet the CAEP/6 requirements by the 2012 time frame, and (3) any noncompliant models will be phased out of production because of low market demand.

We think that the five-year phase-in period from ICAO's effective date of the CAEP/6 standards (corresponding to our new Tier 6 NO_X standards) for newly-manufactured engines is adequate for manufacturers and their customers to respond to the new requirements without disrupting their future planning and purchasing decisions.[77] [78] This phase-in period for applying the Tier 6 NO_X standards to newly-manufactured engines is also identical to the date for this same requirement that was adopted by ICAO. No comments were received expressing concern with this phase-in period for newly-manufactured engines.

We did, however, receive two comments expressing the view that the time between the date of our final rule and the January 1, 2013 effective date of the production cutoff would be too short if it is less than one year. General Electric Aviation (GE) was the most detailed and began by noting that most of the engine models currently in production were certified to the Tier 4 standards and had demonstrated NO_X emissions below the Tier 6 at that time. They continued that if the original certification reports are sufficient for the FAA to formally certify these engines to the Tier 6 standards, then none of these engines would be adversely affected by the production cutoff. However, GE expressed the concern that if additional interactions or formal action by the FAA were needed, or revisions to the FAA's FAR Part 34 were required, then having less than one year between EPA's final rule and the production cutoff could disrupt current engine production. As a result, GE asked that the date of the production cutoff be delayed to take effect 12 months after the final rule, i.e., 2013. The other joint comment from the Aerospace Industries Association (AIA) and the General Aviation Manufacturers Association (GAMA) was similar in nature, but without supporting details.

The commenters' concerns do not relate to the technical or economic feasibility of newly-manufactured engines achieving emission levels in compliance with the new Tier 6 standards by the date of the production cutoff as proposed. The concerns expressed do not argue that additional time is necessary ''to permit the development and application of the requisite technology'' to comply with the standards under CAA section 231(b). Therefore, the date of the Tier 6 production cutoff is appropriate and consistent with the Clean Air Act.

Section 232(b) of the Act directly addresses our obligation relative to the effective date of the regulation. Specifically, it says: ''Any regulation prescribed under this section (and any revision thereof) shall take effect after such period as the Administrator finds necessary (after consultation with the

[70] The requirement that newly-manufactured engines must meet the CAEP 6 NO_X standard by a date certain applies only to engines that are intended to be installed on all new airframes. It would not apply to engines produced as ''spares,'' which are intended to be installed on existing airframes as replacements for maintenance or other reasons. See section III.B.2 for more information about new and spare engines.

[71] After this date the production of any noncompliant engines would cease because the FAA would discontinue issuing an airworthiness approval tag (FAA Form 8130–3) to these engines.

[72] ICAO, Committee on Aviation Environmental Protection (CAEP), Eight Meeting, Montreal, 1 to 12 February 2010, Agenda 2: Review of Technical Proposals Relating to Aircraft Engine Emissions, Adoption of Production Cutoff for Emission Standards, WP/56, Presented by the United States, December 12, 2009. A copy of this document is in docket number EPA–HQ–OAR–2010–0687.

[73] The regulatory text specifies that engine models certified at or below the Tier 4 NO_X standards may be produced through December 31, 2012 without meeting the Tier 6 NO_X standards. Therefore, the effective date of the standards for newly-manufactured engines is effectively January 1, 2013.

[74] ICAO, Committee on Aviation Environmental Protection (CAEP), Steering Group Meeting, Salvador, Brazil, 22 to 26 June 2009, Agenda 6: Emissions Technical-WG3, Production Cutoffs and Associated Flexibilities for ICAO Engine Emission Standards, WP/39, Presented by U.S. Representative, August 6, 2009. A copy of this document is in docket number EPA–HQ–OAR–2010–0687.

[75] ICAO, Committee on Aviation Environmental Protection (CAEP), Steering Group Meeting, Salvador, Brazil, 22 to 26 June 2009, Agenda Item 3: Forecasting and Economic Analysis Support Group (FESG), CAEP/6 NO_X Production Cutoff Cost Analysis, WP/39, Presented by the FESG NO_X Stringency Task Group, February 6, 2009. A copy of this document is in docket number EPA–HQ–OAR–2010–0687.

[76] ICAO, Committee on Aviation Environmental Protection (CAEP), Steering Group Meeting, Seattle, 22 to 26 September 2008, Agenda Item 3: Forecasting and Economic Analysis Support Group (FESG), Production Cutoff for NO_X Standards, WP/6, Presented by the FESG Rapporteurs, April 9, 2008. A copy of this document is in docket number EPA–HQ–OAR–2010–0687.

[77] The ICAO CAEP/6 NO_X standards became effective after December 31, 2007.

[78] This period of time is also consistent with the phase-in period associated with previous ICAO standards. CAEP's predecessor, the Committee on Aircraft Engines Emissions, established the first international emission standards with an effective date four years after adoption, i.e., effectively a four year phase-in. CAEP2 included a phase-in period of 4 years for newly-manufactured engines.

Secretary of Transportation) to permit the development and application of the requisite technology, giving appropriate consideration to the cost of compliance within such period.'' Based on the information provided above, the aircraft engine models described by GE are already capable of complying with the EPA Tier 6 NO_X standards using already applied requisite technology, i.e., the cost of applying with has already been borne, as the effective date of the corresponding ICAO CAEP/6 NO_X standard has already passed. We do not believe there are any technical feasibility or economic implications arising from the continued application of the requisite technology for those engines to meet the Tier 6 NO_X standards. Also, consistent with our most recent previous amendment to the NO_X standards, which similarly promulgated the standard at a level that was already being met by aircraft engine manufacturers who were already applying the requisite technology, the effective date does not need to include additional lead time for the development and application of additional technology that would be needed to comply with the standards. See, e.g., 70 FR 69604, 69674–76 (Nov. 17, 2005). As a result, the implementation dates provide more than adequate lead time under the statute. Therefore, because aircraft engine manufacturers are already able to comply with the Tier 6 NO_X standard through the continued use of already applied requisite technology, and because the effective date of the corresponding ICAO CAEP/6 NO_X standard has already passed (and also based on the assessment described in section V. Technical Feasibility, Cost, and Emission Benefits), we find that the dates provide more than adequate lead time under the statute for application of requisite technology.

We also want to stress that the production cutoff is actually an ICAO standard and we think it is important to stay aligned with the CAEP production cutoff date. We note that this is also being adopted by the European Aviation Safety Agency (EASA) and perhaps other aviation certification authorities. Our adoption of the proposed date insures international consistency regarding the production cutoff date and avoids contradicting our international bilateral agreements with other governments, e.g., the European Union.

Regarding the need for engine models to be formally recognized by the FAA as complying with the new Tier 6 standard, this is completely within the purview of the FAA. In our previous most recent amendment to the NO_X standard, we provided just a one-month lead time period before the revised standard became effective, and FAA did not adopt corresponding implementing regulations until one year later, with no apparent disruption to the industry. (See 70 FR 69664, Nov. 17, 2005.) The new Tier 6 standards are the same as the CAEP/6 standards that were approved by ICAO in 2005 with an effective date of beginning after December 31, 2007. Therefore, just as for the 2005 revised NO_X standard that we similarly promulgated significantly later than the effective date of the corresponding ICAO CAEP standard, we do not believe that it is necessary to delay the effective date based on a need for the FAA to revise its own implementation and enforcement regulations.

Finally, section 232(a) of the Act directs the FAA to ensure compliance with our standards. In this regard, the FAA has developed a streamlined process to recognize compliance with Tier 6 and or Tier 8 as appropriate for currently type certified engine models which meet the emission standards and they have assured the regulated industry that they will dedicate the necessary resources to formally recognize conformance with the standards before the production cutoff date.

For the reasons stated above, EPA is promulgating the Tier 6 production cutoff with the originally proposed effective date of January 1, 2013.

2. Carryover of Previously Generated Emission Test Data

Aircraft engine models normally receive type certificates, which include a determination that the model meets the emission standards in force at the time the type certificate is granted. EPA has not updated its aircraft emission standards or test procedure regulations since 2005. In this action we are adopting Tier 6 and Tier 8 NO_X emission standards and are adopting either in 40 CFR part 87 directly or through incorporation by reference of Annex 16, Volume II a number of minor changes to test procedures and related requirements. These changes will become effective on the date when the rule becomes effective.

This leaves open a question regarding the future validity and acceptability for amended type certificates of emission tests and emission test data generated under previously specified test procedures and related requirements. For example, there may be an engine model tested in 2004 that demonstrated HC, CO, and NO_X emission levels below the exhaust emission standards in effect at that time and also below the Tier 6 or perhaps even the Tier 8 standards that are being promulgated in this final rule. We want to be clear that we do not intend minor changes to test procedures or related provisions and requirements to trigger the need for additional testing. Thus, in cases where a manufacturer has a valid current type certificate based on emissions information generated under the test procedures in force at the time the type certificate was granted, we consider that data to be valid for any formal FAA recognition of compliance, e.g., an amended type certificate, with the Tier 6 or Tier 8 NO_X emission requirements if the original test data demonstrate such compliance. The same is true for the HC and CO emission standards. This clarification should greatly facilitate compliance determinations by the FAA and eliminate any uncertainty regarding the potential for otherwise minor test procedure changes to trigger new emissions testing for previously certificated engines with emission levels below the new NO_X standards.

3. Exemptions and Exceptions From the Tier 6 Production Cutoff

In conjunction with the implementation of the new Tier 6 NO_X standards, we are establishing provisions which allow engine manufacturers to request an exemption or exception from meeting the Tier 6 NO_X standards for newly-manufactured engines. These provisions replace existing provisions addressing exemptions that were promulgated in section 87.7 of our aircraft engine regulations. (Any exemptions previously issued under section 87.7 would not be affected by the revisions.) This section of the preamble describes these exemption and exception provisions, i.e., exemptions for engines installed in new aircraft and exceptions for spare engines used in existing aircraft for maintenance purposes. It also includes a description of a short-term exception program (termed the low-volume, time-limited transitional exemption program). These provisions have largely been crafted to be consistent with exemption provisions in the ICAO Environmental Technical Manual (ETM).[79] [80] The provisions of

[79] ICAO, ''Committee on Aviation Environmental Protection (CAEP), Report of the Eighth Meeting, Montreal, February 1–12, 2010,'' CAEP/8–WP/80. A copy of this document is in docket number EPA–HQ–OAR–2010–0687.

[80] Note that EPA has submitted a paper to amend the exemption provisions included in this ETM to be consistent with this rule. See ICAO, ''Newly Produced Engine Exemptions for CAEP/6 NO_X Production Cutoff,'' CAEP9_WG3–CTG–2_IP01, September 23, 2010. A copy of this document is in docket number EPA–HQ–OAR–2010–0687.

the ETM guidance were developed in the context of the CAEP/6 NO_X production cutoff deliberations leading up to the CAEP/8 meeting in February 2010.

While we are revising our regulations, the process for evaluating any request for an exemption, i.e., petition, and any final decision on its disposition would be unchanged. In this regard, the FAA is the process owner under its enforcement authority contained in section 232 of the Clean Air Act.[81] The FAA must consult with EPA in evaluating the merits of the request, and the EPA must formally concur with any decision regarding the granting or denial of the request.

We are deleting from our regulations the requirement in § 87.7(e) that the FAA publish a notice of the exemption in the **Federal Register**. The FAA has an established process in place for publishing requests for exemption that are filed in accordance with 14 CFR part 11. Under § 87.7(b) of the existing regulations, the FAA, with EPA concurrence, may also exempt low-production volume engines from being fully compliant with the emission standards. Several such short-term exemptions were granted in the 1980s when emission standards were first applied. These exemptions have since expired, and requests for new exemptions under those provisions have not been submitted. We have determined that these provisions, which were adopted in conjunction with revised emission standards in 1982, are no longer of any utility.[82] Therefore, we are deleting these provisions to avoid confusion.

We are also deleting the time-limited exemption provision for *in-use* engines that is contained in section 87.7(d) of the existing regulations. This provision applies to fuel venting and smoke emission standards, which were new when the exemption was adopted in 1973. The exemption allowance was limited to in-use engines that were unable to comply with the requirements when the regulation became effective in 1974. The in-use fleet of engines was fully retrofitted to comply with the standards later in the 1970s. Therefore, this provision is now obsolete and we are deleting it to avoid confusion. We proposed to delete the existing provisions for temporary exemptions based on flights for short durations and infrequent intervals. This proposal was based on the EPA's and FAA's belief that the provisions were unnecessary because our standards apply to aircraft certificated by the FAA, and the FAA does not address in the certification process whether an aircraft will be used for short durations or infrequent intervals. Hence, the provisions appeared to have no utility.

We received two comments from the Aerospace Industries Association (AIA) and the General Aviation Manufacturers Association (GAMA) requesting that the provision be retained. First, they argued that as in the past, a new aircraft may be produced at a commercial facility that is destined for immediate conversion to a military only application at a separate facility. These aircraft may require a small number of airworthiness flight tests before being delivered to the conversion facility and conceivably would be subject to EPA standards during flight testing. While these aircraft would generally utilize compliant engines, it may be possible that non-compliant engines could be used (our standards do not apply to engines used on military aircraft as discussed later) and temporary exemptions would be necessary. Second, AIA and GAMA commented that it would be helpful if the provision also allowed for granting a discrete number of exemptions over a specified time period, rather than having to request the exemption prior to each flight as currently required.

In considering the commenters' suggestion to retain the exemption provision, we note that allowing such operations will not have any significant adverse affect on the environment because of the infrequent nature and short duration of such flights. Retaining the exemption is also consistent with exempting military aircraft from emission control requirements as discussed later. Therefore, we have retained the provision with one change, made in response to the comments, as described below.

The current provision calls for the Secretary of Transportation to consult with the EPA Administrator when considering any exemption request for infrequent interval and short duration flights not explicitly allowed by the regulations. Given the inconsequential nature of such flights on the environment, we believe that the Secretary should be able to consider and act on these petitions unilaterally to streamline the process. Therefore, we are deleting that portion of the previous exemption provision. Of course, we will consult with the Secretary if asked to do so. As for requesting a discrete number of temporary exemptions, we believe this is an issue that the Secretary of Transportation may address under its enforcement role as described in section 232 of the CAA.

The current regulations also provide for permanent exemptions for newly-manufactured engines based on consideration of the certain factors specified in section 87.7(c). We are replacing these provisions with new regulatory text generally consistent with the ETM that would provide for permanent exemptions or exceptions[83] for newly manufactured engines used on new aircraft and spare engines used for maintenance or replacement purposes. These are summarized below. (See § 87.50 of the regulations for additional details on these exemptions/exceptions.)

a. New Provisions for Spare Engines

We are revising the regulations to allow the sale of a newly-manufactured engine for installation on an in-service aircraft, i.e., a spare engine that does not conform to the applicable emissions standards at the time it was produced. It does *not* allow for installing such an engine on a new aircraft. Spare engines are produced from time to time in order to keep an aircraft in revenue service when the existing in-service engine must be removed for maintenance or replacement purposes as needed. Otherwise removing these aircraft from active service would be very expensive and logistically difficult.

As we explained in the proposal, explicitly allowing for the production of spare engines is not addressed in the existing regulations because there is no production cutoff for the current Tier 4 NO_X standards. Thus manufacturers have been allowed to continue production of older engine designs under type certificates first issued before the Tier 4 standards took effect (e.g., Tier 2). However, final regulations now apply a Tier 6 NO_X production cutoff to all newly- manufactured engines. This means that if we did not also adopt a provision for the continued production of spare engines, manufacturers would be prohibited from producing Tier 4 engines under the existing type certificates for this purpose. We see no reason to change our policy of allowing manufacturers to

[81] EPA formally transferred the responsibility and authority for the evaluation of requests for exemptions from the emission standards to the Secretary of Transportation (DOT). See ''Control of Air Pollution from Aircraft and Aircraft Engines; Emission Standards and Test Procedures;'' Final Rule, 47 FR 58462, December 30, 1982.

[82] U.S.EPA, ''Control of Air Pollution from Aircraft and Aircraft Engines; Emission Standards and Test Procedures,'' Final Rule, 47 FR 58462, December 30, 1982.

[83] As used in 40 CFR part 87, as a practical matter the meanings of ''exception'' and ''exemption'' are essentially equivalent. However, under FAA regulations, the meanings of these terms are distinct, especially with respect to the manner in which they are administered.

produce new engines for use as spares. Therefore, the final regulatory provisions allow this practice to continue.

To ensure there would be no adverse environmental effect from allowing the use of a spare engine as a direct replacement for an existing engine, we proposed that the spare could be used only when the emissions for all pollutants of that engine were equal to or lower than those of the engine it replaced. This proposed requirement was consistent with the ETM, which also contains this allowance. We received a joint comment from AIA and GAMA stating that this is impractical because, while unlikely, a spare engine might have a different emissions profile for some pollutants than the engine it would replace. As an example, they stated that the two engines could have somewhat different combustion systems that might make one engine lower in NO_X but higher in CO. They also suggested that EPA should consider the totality of the emissions in the decision, or delete the requirement in the final rule.

These comments are surprising because this ETM provision, as well as the exception provisions, was subject to significant discussions within CAEP that included the engine manufacturers as well as a representative from AIA. Nonetheless, in this instance we believe the proposed provision should be modified to accommodate the potential for unusual circumstances as explained by the commenter.

As noted above, AIA and GAMA suggested that EPA consider of the totality of emissions relative to their environmental effects as the basis for evaluating spare engine exemptions. This would entail understanding and comparing the environmental consequences of the different pollutants. We find that could be very complicated because different pollutants have different health and welfare end points and consequences. For example, in the illustration offered by the commenters, the effects of LTO NO_X and CO are largely unrelated to one another.

We think a preferred option to evaluating total environmental effects, or even dropping the provision entirely, is to incorporate an anti-backsliding requirement which ensures that at a minimum the excepted spare engine at least meets the same emission standards that are applicable to the engine it is replacing. For this reason, in response to the AIA and GAMA comment, we are modifying this provision in the final rule to allow an excepted spare engine to have different emission levels compared to the engine it replaces as long as it remains compliant with each of the applicable emission standards and any other requirements of its type certificate. Given the limited number of spare engines in the fleet, we expect allowing these engines to have somewhat different emissions profile from engines they are replacing will have no significant adverse environmental effect. This is especially true given that we expect the emissions of an excepted spare engine will be equal or better than the engine it is replacing in most cases in accordance with the basic tenant of the ETM.

We are not requiring engine manufacturers to obtain FAA or EPA approval before producing spare engines. However, they must submit information about the production of spare engines in an annual report to EPA (see section III. D for more on the annual report). We proposed that because manufacturers are not required to seek or obtain formal approval to produce spare engines, this allowance was referred to as an ''exception'' rather than an ''exemption''. This terminology would be consistent with current FAA regulations. Furthermore, we proposed that the permanent record for each engine excepted under this provision would need to indicate that the engine is an excepted spare engine and the engine itself would need to be labeled as ''EXCEPTED SPARE.'' in accordance with FAA marking requirements of 14 CFR.

We received comments relating to allowing spare engines to be produced without requiring prior approval and the use of the terms ''exceptions'' or ''excepted.'' The Air Transport Association (ATA) [84] appreciated that there would be no case-by-case approval, noting that it simplifies administering the provision for FAA without compromising the structure of the exemptions program set forth in the ETM. Regarding the terminology, AIA and GAMA noted that the terminology was inconsistent with current engine name plate labeling practices. They stated that engines are currently either marked ''COMPLY'' or ''EXEMPT'' for emissions. Both organizations generally felt the change in terminology for spare engines might be concerning to the operators holding an engine with a plate reading ''EXCEPTED.'' They concluded that the name plate for spare engines should continue to use ''exempt.'' The ATA appeared to give at least tacit approval to the new terminology by acknowledging without objection that spare engines would be labeled accordingly.

First, we are puzzled that operators with a spare engine labeled as ''excepted spare'' rather than ''exempt'' may have a concern, because AIA and GAMA did not elaborate on just what the concern might be. Without at least an example, we are unable to discern the nature of the concern and respond directly to it. We also find it puzzling that the two organizations that represent aerospace manufacturers expressed a concern regarding operators of aircraft and aircraft engines when the actual organization representing those companies, ATA, did not express such a concern.

Second, regarding the terminology, the Tier 6 production cutoff does not apply to the continued production of engines that are designated spares. Spare engines are produced to replace a similar engine already in service that was removed from service for maintenance purposes. Accordingly, the production of a spare engine is not restricted by the production cutoff, and the regulation does not apply to these engines. The non-applicability of the cutoff eliminates the need to process an exemption for continued production of these engines beyond December 31, 2012.

Conversely, engines that are intended to be produced for new installations (i.e. not replacing an engine already in service) are subject to the production cutoff regulation and the continued production of such engines beyond the cutoff date would require a grant of exemption. Since the production of spare engines is not subject to the new cutoff regulations, the FAA proposed and the EPA accepted the idea that referring to these engines as exceptions to the regulation was more appropriate than requiring case-by-case consideration of exemptions when the regulation did not apply.

Moreover, the word ''exemption'' is a meaningful regulatory term. It is used by the FAA in 14 CFR Part 11 to mean that an applicant is subject to a particular regulation and is requesting time-limited relief under a specific set of criteria. It is a specialized form of rulemaking. When an entity or its product is specifically left out of a regulatory provision, it is considered ''excepted''. Any regulation adopted by the FAA would use these terms consistently.

As already mentioned, assuming incorporation of these provisions by the FAA, engines meeting the requirements for spare engines could be produced and entered into commerce without prior approval from EPA or FAA. It is

[84] The Air Transport Association has changed its name to Airlines for America (A4A).

important to note that while spare engines would be excepted from the Tier 6 NO_X standards being promulgated today, they still need to be produced under an FAA type certificate. (This FAA oversight would serve the same role as the exemption approval step envisioned by ICAO in its ETM language for spare engines.) We also expect minimal additional burden for manufacturers, since we are not establishing new restrictions, monitoring, recordkeeping, or reporting requirements other than the end of year report.

b. New Provisions for Engines Installed in New Aircraft

The primary purpose of allowing limited continued production of Tier 4 engines is to provide for an orderly implementation of the Tier 6 NO_X production cutoff. It addresses engines reaching the end of their production cycles in the time frame when new emission standards take effect. The typical production cycle would have annual production volumes ramp up quickly, remain at relatively large volumes for several or many years, and then fall off over a few more years. When new emission standards are adopted in the middle of a production cycle to take effect a few years later, manufacturers generally devote technical resources to bring into compliance those engine models expected to be produced in large numbers in the time frame when the new standards are in effect. In contrast, they may plan not to invest in upgrading the emissions of engine models that would be very near the end of their normal production cycles when compliance with the new standards becomes required. The actual length and shape of this tail of production volumes can be affected by factors not fully within the engine manufacturers' control, e.g., unexpected market demand. Thus, exemptions may be justified if a manufacturer does not complete the production cycle before the production cutoff date and projected production volumes are not adequate to justify investing the necessary resources to reduce emissions or there are other technological issues.

Furthermore, in certain exceptional circumstances exemptions may also be appropriate. These are ''hardship'' situations that may arise as a result of unforeseen technical or economic circumstances or events beyond control of the manufacturer. For example, this could vary from unexpected problems with technology upgrade programs to labor disruptions or natural events disrupting production or parts availability.

Our regulations currently address these kinds of situations in section 87.7(c), entitled, ''Exemptions for New Engines in Other Categories.'' We are replacing this provision with a new set of provisions addressing exemptions for new engines.

i. Time Frame and Scope

The final regulations allow engine manufacturers to request an exemption for newly-manufactured engines not meeting the Tier 6 NO_X standards so they may be installed in new aircraft. If granted, manufacturers may produce a limited number of these newly-manufactured engines in a four year time period beginning after December 31, 2012 and going through December 31, 2016. This four-year time period is consistent with the ETM. The period for any given approved exemption could be shorter depending on the specifics of the application, but it could not be longer. This exemption limits NO_X emissions from engines that are covered by a valid type certificate issued by FAA. The engines must meet all other applicable requirements. More specifically, an engine exempted from the Tier 6 NO_X standards must be covered by a previously issued type certificate showing compliance with the Tier 4 NO_X standards,[85] as well as the current HC, CO, fuel venting, and smoke standards.

As explained above, the scope of the exemption provisions are limited to newly-manufactured engines that do not comply with the Tier 6 NO_X standards. No need has been identified to apply such exemption language to the other regulated exhaust pollutants, i.e., smoke, hydrocarbons and carbon monoxide. The emission standards for those pollutant species have remained unchanged for nearly three decades and present no technical issues for modern turbofan engines.[86] If new emission standards for these pollutants are considered in the future, the potential need for exemption provisions will also be assessed at that time.

We received comments requesting that exemptions be available for newly-certified engines in addition to newly-manufactured engines. General Electric Aviation (GE) stated that unforeseen circumstances may arise during the lengthy aircraft engine development process that necessitates a change in design, and that may affect the ability of that engine model to meet the prevailing Tier emission standard at certification. For that reason, GE concluded that exemptions for newly-certified engine would be beneficial. The AIA and GAMA jointly stated that the existing 40 CFR 87.7(c) not only provides the flexibility to exempt newly-manufactured engines from a production cutoff, but also for newly-certificated engine models subject to any emission standards, e.g., the Tier 8 NO_X standards. They requested that this flexibility should be retained.

Regarding the availability of exemptions for newly-certified engine models, the proposed regulatory text made clear that the exemption provisions would only apply to newly-manufactured engines. Specifically, the intent was to establish provisions for newly-manufactured engines to address the potential technology and economic adversities that may arise as part of adopting the Tier 6 production cutoff. The ICAO ETM provisions are clearly intended for that same purpose. Also, the original intent of EPA's current exemption provisions in § 87.7(c), which we are modifying in this rulemaking, is clear from the proposed rulemaking and final rulemaking that resulted in those provisions. The March 24, 1978 proposal described the concern as ''* * * engines which are nearly [at] the end of their production life would be terminated prematurely because there would be insufficient future sales to justify incorporating emission controls.'' (See 43 FR 12619, March 24, 1978.) The December 30, 1982 final rule referenced ''* * * the removal of an engine model from the market because of its failure to comply.'' (See 47 FR 58468, December 30, 1982.) Obviously, the intent of the existing exemption provision cited by AIA and GAMA was to make it apply only to newly-manufactured engines.

As a general matter, we believe an exemption from the Tier 6 standard, or any other standard, for newly-certified engine models is speculative at this time and would undermine the goal of regulatory compliance by new engine designs. In any event, neither the current ICAO Annex 16, Volume II provisions nor the ETM provide for newly-certified engine exemptions. We believe that such would be a fundamental shift from Annex 16 and the ETM should be explored within the framework of ICAO/CAEP. Furthermore, engine manufacturers already have

[85] Engines certified only for compliance with earlier Tier 2 NO_X standards would not be eligible for exemptions. This is also consistent with the exemption language in the ICAO ETM. Note that where such engines have emissions actually meeting the Tier 4 NO_X standard, they may be recertified to the Tier 4 standards, but only before the effective date of the regulations.

[86] For example, the hydrocarbon exhaust emission standards were adopted on December 30, 1982. See 47 FR 58462.

significant leadtime between the date CAEP adopts a new emission standard and the standard's effective date, e.g., usually 3–5 years. Finally, engine manufacturers historically design new engine models to comply with the most stringent future standard that also provides for a longer development time horizon. Therefore, we are promulgating the exemption provisions for newly-manufactured engines as proposed.

ii. Production Limit

As proposed, § 87.5 of the final regulations reflect the essence of the general exemption language for exhaust emission standards regarding how to determine the number of allowable exemptions that is embodied in existing § 87.7(c) of the regulations. That provision generally that the FAA, with EPA's concurrence, may grant exemptions to exhaust emission standards based on factors such as adverse economic impact on the engine manufacturer, aircraft manufacturer, or airline industry; in addition to the effects on public health and welfare.

As a result, § 87.5 does not specify a nominal number of exemptions. Rather, each request for exemption would be evaluated on a case-by-case basis, using the information provided by the applicant and any other relevant information that is available to FAA and EPA at the time. Any approved exemption would include a specific limit on the number of such engines based on that information and is not defined on a basis such as type certificate. (See section III.B.b.iii for a description of what the request must contain.) The intent, of course, would be to exempt the minimum number of engines that can be clearly justified, including a consideration of the public health and welfare effect associated with the exemptions.

In the proposal, we acknowledged that our approach to determining limits on the number of exempt engines differs from the language contained in the current ICAO ETM guidance. The ETM states that ''[t]he number of engines exempted would normally not exceed 75 per engine type * * *.'' [87] We chose not to propose adopting this language on the nominal number of engines based on a single type certificate. Our reasons for this deviation were detailed in the. The interested reader is referred to the proposed rule for more detail. (See 76 *FR* 45012. July 27. 2011.) We also want to emphasize that the exemption provisions as proposed and promulgated in this notice are not necessarily limited to the Tier 6 NO_X production cut-off, but could in fact be applied to future aircraft engine emission standards if a similar production cut-off was adopted. Therefore, we believe our approach is preferable because it more clearly leaves the number of exemptions that might be granted open, not limited to either more or less than 75 per engine type, and subject to the justification supplied by the engine manufacturer, both for the Tier 6 production cut-off and the future.

We received several comments focusing primarily on the number of exemptions and the underlying process that is embodied in the ETM and our proposal. General Electric Aviation (GE) maintained that harmonization with the international community is not only required by the Chicago Convention, but also provides streamlined processes and procedures within the regulated industry. They contended that any purported benefits to EPA's unique exemption scheme were outweighed by setting up a conflict with the remainder of the world. They also suggested that if EPA wants a different approach for evaluating exemptions, it would be more appropriate to work inside the ICAO/CAEP process toward that end.

The ATA commented that EPA's case-by-case approach to determining the number of engines is a rejection of the ICAO/ETM provisions that limit ''* * * the number of exemptions * * * to 75 engines per type certificate * * *.'' They argued that this would create a serious discontinuity between the U.S. and the rest of the world, undermining ICAO's objective of international uniformity. The ATA also argued that the ICAO exemption limits are intended to be coordinated among international aviation authorities, and that differing rules would make this impracticable. As evidence of this problem, ATA cited the European Aviation Safety Agency's (EASA) proposed rulemaking, which they noted was based on the assumption that the ICAO proposals will be adopted unaltered by other aviation authorities of the world. The ATA also stated that the ICAO ETM guidance document supplements the official standards of Annex 16, Vol. II and, therefore, the ETM provides technical elaboration on the implementation of Annex 16. From this ATA concluded that differing practices in this regard are counter to the Chicago Convention.

Regarding consistency with the Chicago Convention, our proposal thoroughly explained that the ETM is guidance material; not an ICAO standard or regulation of any type. While consistency is desirable, it is not compelled when a deviation is justified. Therefore, we disagree with the commenters on this point, and specifically with ATA's comment that the ICAO guidance is effectively the equivalent of an ICAO Annex 16 standard.

Turning to ATA's comment regarding the ETM cap of 75 engines per type certificate, we first want to point out that this is not a maximum limit on the number of potential exemptions per type certificate nor is it an implied entitlement. Rather the ETM provision is an expectation that ''[T]he number of engines exempted would normally not exceed 75 per engine type certificate * * *.'' as stated in the document. With this perspective both the ETM and our approach are similar in that the maximum number of exempted engines is based on a consideration of the petitioner's justification for such exemptions.

Finally, we disagree with the comment that the differences with the ETM make international coordination unworkable. In fact, one of the proposed justification elements, i.e., how many affected aircraft will be registered in the U.S. and other countries (estimate allowed), was described in the preamble for the proposal as being aimed at helping to facilitate consultation and coordination. Also, as noted above, the ETM's expectation and our approach are similar in that the maximum number of exempted engines under both approaches is based on a consideration of the petitioner's justification for such exemptions. We do not think coordination with foreign aviation authorities, with these few differences, should pose any problems. After considering the above comments on the number of exemptions and the underlying process embodied in the ETM and our approach, we are promulgating the provisions relating to the comments as originally proposed.

iii. Exemption Requests

We are establishing a process for requesting exemptions (for engines used on new aircraft) that would be more formal and structured than the current process. We are requiring manufacturers submit their request to the FAA, as currently required. The FAA will then share the submittal with EPA and execute the consultation process.

To ensure that we have the information necessary to evaluate exemption requests in this specific manner, the requests need to include the following details to describe the specific engine model for which the manufacturer is requesting the

[87] CAEP/8—WP/18, Environmental Technical Manual (ETM), Vol. II on the Use of Procedures in the Emission Certification of Aircraft Engines, Appendix ''ICAO Emissions Environmental Technical Manual''.

exemption. The final provisions contained in § 87.50, which are summarized below, are consistent with and in some areas expand on the provisions in the ETM:

General Information

- Corporate name and an authorized representative's contact information (including a signed statement verifying the information);
- Description of the engines for which you are requesting the exemption, including the engine model and sub-model names;
- The number of engines that you would produce under the exemption and the period during which you would produce them;
- Identify the authorizing type certificate (type certificate number and date);
- Information about the aircraft in which the engines will be installed, including the airframe models and expected first purchasers/users of the aircraft, and the countries in which you expect the aircraft to be registered (including an estimate of how many will be registered in the U.S.); and
- List of other certificating authorities from which you have requested (or expect to request) exemptions, and a summary of each request.

Justification and Impacts Assessment

- A detailed description and assessment of the environmental impact of granting the exemption;
- Technical issues, from an environmental and airworthiness perspective, which may have caused a delay in compliance with a production cutoff, if any;
- Any economic impacts on the manufacturer, operator(s), and aviation industry at large; and
- Projected future production volumes and plans for producing a compliant version of the engine model in question.

Other Factors

- Hardship: Impact of unforeseen technical circumstances, business events, or other natural or manmade calamities beyond your control, and
- Equity issues in administering the production cutoff among economically competing parties.

It is important that any action on a potential exemption request be in the public interest; the fairly comprehensive list of application information in the regulations is intended to gather the information needed for this assessment. We would expect to take a broad perspective in evaluating what is or is not in the public interest. This is why a manufacturer's justification needs to include a quantified description of the environmental effects of granting the exemption, as well as discussion of economic and technical issues related to bringing the engine into compliance. The analysis of environmental impacts needs to specify by how much the exempted engines would exceed the standards, the in-use effects in terms of lifetime tons of NO_X, and estimate the emissions rates of engines/aircraft that could potentially be used if the exemption was not granted. Since exemptions granted under the regulations apply only to NO_X emissions, the analysis could also include possible benefits regarding noise levels or reduced emissions of pollutants other than NO_X. Relevant economic impacts could include effects on the engine manufacturer, airframe manufacturer, airline(s), and the general public.

As we detailed in the proposal, some manufacturers have requested exemptions in the past based on the largest number of engines they hoped to continue manufacturing without knowing how many they would actually be able to produce or who would purchase them. The new exemption language calls for manufacturers to target their requests more specifically based on likely production needs and time periods. While we expect a manufacturer to have this specific information when they submit a request, the final regulations allow us to process exemption requests with somewhat less specific information. However, we expect this to apply only for unusual circumstances. Manufacturers also are being required to notify the FAA if they determine after submitting a request that the information is not accurate, either from an error or from changing circumstances.

The final regulations also allow manufacturers to revise their requests to justify covering additional engines at any time before approval. We would then review the revised request. Similarly, for exemptions that are already approved, manufacturers could request that additional engines be added after providing the justification for the increase.

We received comments on the level of detail required in a request for exemption and the time needed to add more engines to such a request or an already approved exemption. First, ATA was concerned that requesting an increased amount of engine exemptions can take a significant amount of time. They stated that there may be insufficient time for a manufacturer to receive approval for additional engine exemptions if necessary to meet previously unknown market demands.

In response, we find it unfortunate that the comment does not provide a specific example or other information that may illustrate this concern. As a general response, given the long leadtime between the initiation of discussions among aircraft purchasers and aircraft manufacturers, and actual orders and final deliveries, we expect that manufacturers will have enough time to request additional engine exemptions, and if appropriate, for the FAA and EPA to approve such a request. We expect that amending an already approved exemption would take less time to act upon than the original petition. Also, engine manufacturers may request an expedited review from the FAA, and by association the EPA, if circumstances warrant. Finally, to the extent that an engine manufacturer has specific concerns in this area, they could be ameliorated by improving the lines of communication with air frame manufacturers to increase the manufacturer's awareness of market interest in potential new orders. Accordingly, we are promulgating the exemption provision relating to this comment as proposed.

Second, ATA commented negatively that the exemption request for each individual engine be justified, ''* * * including the exact number, initial purchasers/users, countries of registry and plans for bringing the product into compliance.'' They claimed that this knowledge may not be known at the time of the exemption request because of market leadtime. As an example, ATA cited the 1998 Rolls Royce (RR) exemption request from the CAEP/2 cutoff for 150 engines that was not based on that type of certainty, but was a prospective exemption for two years as protection against the uncertainties of technical development. They stated that RR did not know when the development process would be completed, and hence did not know the exact number of non-compliant engines that airlines would purchase. The ATA also added that the three affected airlines worked with RR to provide documentation of the financial and operational hardship that they would suffer based on their aircraft delivery schedules.

In response to ATA's second comment, we simply want to note that the information we would normally expect to be contained in the exemption application is actually not much different than the justification envisioned by the ETM. That guidance document explains that the petitioner should, to the extent possible, provide quantitative support to justify the

exemptions. Specifically, the ETM states that it ''* * * provides guidelines on the process and criteria for issuing exemptions * * *.'' These include some of the same elements as contained in our proposal and referenced above, i.e., the exact number of exemptions being requested, to whom the engines will be originally delivered, and plans for producing a compliant product. Therefore, the ETM envisions a consideration of specific information as part of the exemption request, in a similar fashion as EPA's approach, in order to decide on the exact number of exemptions to grant. We are simply being more explicit in some areas concerning the type of information that should be included in any exemption request. We also note ATA's comment that ''[T]he airlines worked with Rolls Royce to provide documentation of the financial and operational hardship that they would suffer if there were an interruption in the supply of ICAO-compliant engines during their aircraft delivery schedules.''

Given the long lead times generally associated with new aircraft orders and deliveries, we expect aircraft operators will work closely with aircraft manufacturers as their new aircraft needs are identified. Engine manufacturers should in turn work with aircraft manufacturers to stay aware of market interest in potential new orders. This appears to be reflected in the commenter's example regarding the cooperation between airlines and RR in fashioning the exemption justification. Also, as explained in the proposed regulatory text, the petitioner should include information on the ''expected'' first purchasers/users of the aircraft. It also asked for information on the number of aircraft that will be registered in the U.S. versus other countries and that this may be estimated, if not known. Therefore, precise knowledge is not needed for certain elements of the justification. The preamble to the proposed requirements also stated that the regulations would allow us to process exemption requests with somewhat less specific information, although we expected that to apply only for unusual circumstances. We have made this clearer in the final regulations.

In order to allow us to oversee these exempted engines, manufacturers are being required to also provide an annual report to EPA on exempt engines similar to the information about spare excepted engines. The permanent record for each engine exempted under this provision must indicate that the engine is an exempted engine and the engine itself must be labeled as ''EXEMPT NEW.''

iv. Coordination of Exemption Requests

The limit on the number of potentially exempt engines as described in the ETM is intended to apply to overall worldwide production. Toward that end, the ETM envisions that certificating authorities and member states should coordinate whenever any authority receives an exemption request.

Working with the FAA, we expect to consult with other aviation authorities whenever we receive an exemption request. This would include a consultation with other certificating authorities as well as coordination with the appropriate civil aviation authority of any country where the aircraft with the exempted engines will be registered.

To facilitate this coordination, we are asking that manufacturers also include in their requests, a list of countries in which the aircraft are expected to be registered. While not specifically listed in the ETM, we believe that this information is consistent with the ETM as it would be necessary to ensure proper coordination. The ETM appears to presume that each member country will recognize exemptions granted by other countries. This presumption seems reasonable assuming that the exemption being granted is generally consistent with the guidelines of the ETM and that the consultation and coordination called for in the ETM was conducted in good faith. However, there should be no presumption that EPA would agree to an exemption for an engine model if the aforementioned collaboration, consultation, and coordination were not conducted. The Clean Air Act (which provides EPA with its authority to establish emission standards) includes no provisions that would allow any foreign country or other certificating authority to exempt subject aircraft engines, over the objection of FAA and EPA, from the applicable standards EPA promulgates.[88] Nevertheless, because our final exemptions provisions are generally consistent with the procedures called for in the ETM, assuming appropriate consultation and coordination in accordance with the ETM and absent unforeseen complications, it is reasonable to believe that FAA and EPA would not object to exemptions for engines properly exempted by other countries under those procedures. The FAA would still need to take the certification action as called out in 14 CFR 91.203 and 14 CFR 21.183.

This, however, raises the question as to how we would respond to an exemption request when another certificating authority did not consult or coordinate on a previous request for the same engine model. A related concern arises if an FAA type certificate is sought under a reciprocity agreement for an engine which was previously certificated under an exemption by a foreign certificating authority, and the original exemption was not coordinated with the United States. Such requests would likely be viewed as new exemption requests if the anticipated collaboration, consultation, and coordination had not occurred.

Thus to avoid these issues, in most cases, manufacturers may want to work with all relevant certificating authorities at the same time as well as the civil aviation authority of nation(s) where the aircraft will be initially registered or operated if that nation requires a type certificate issued under its own regulations to operate in its air space consistent with international agreements.

v. Low-Volume, Time-Limited Transitional Exemption Program

We received a comment from one manufacturer expressing concern that once the final rule becomes effective additional time may be required for EPA and FAA to establish and undertake procedures to review and act upon exemption requests. They stated that the time needed for this process could be very disruptive for engine manufacturers that have already contracted to delivery engines during the period which FAA/EPA would need to consider exemption requests. They also claimed it would be harmful to airplane manufacturers and airlines. To avoid such an undesirable outcome, the commenter suggested that EPA should grant a one-time, interim block of perhaps 20 exemptions.

Based on supplemental information we received from the commenter,[89] we find the concerns center on six engines for which they have contract commitments to build and deliver within several months of this final rule. These six engines belong to two engine models, with four engines in one model

[88] It is possible that applications for exemptions by foreign entities may be filed with their national certificating authorities for engines manufactured after December 31, 2012 and could be operated in the United States. The FAA has several international bilateral agreements in place that include provisions and obligations for technical assistance on environmental certification matters. The FAA plans to continue to coordinate with those foreign certificating authorities in their considering and granting petitions for exemptions and, likewise, those that are filed with the FAA and in consultation with EPA.

[89] Memoranda documenting this supplemental information are located in docket number EPA–HQ–OAR–2010–0687.

and two engines in the other. The first model consisting of four engines is scheduled to begin shipping in January 2013, shortly after the January 1, 2013 Tier 6 production cut off. These engines are currently certificated to the Tier 4 NO_X standards. The commenter has stated, however, that the design of this engine model has been technically modified to achieve the Tier 6 standards. Unfortunately, compliance testing of this model to meet the Tier 6 standards cannot be performed until December of 2012 when the first production version is built. Assuming that this testing is successful, inadequate time remains for the FAA to formally recognize Tier 6 compliance based on those tests before the production cutoff becomes effective.[90] The two new aircraft using these engines are being built and will be delivered to a foreign airline.

The second model is comprised of two engines with a contracted delivery date in May 2013. They are also certificated to the Tier 4 NO_X standards. These engines are at the end of their production life, i.e., no additional future deliveries for civilian uses are anticipated beyond these two contracted engines. For this reason, the commenter has stated that it is not economically feasible to redesign this model to conform with the Tier 6 NO_X standards, even if it were technically feasible. The single new aircraft using these engines is also being built for delivery to a foreign airline.

After assessing this concern, we are including an exception provision in the regulations that permits any aircraft engine manufacturer to produce and enter into commerce up to six newly-manufactured engines with a date of manufacture, as defined in the regulations, prior to August 31, 2013 that are not certificated to meet Tier 6 emission requirements. We find that a considerable amount of time will indeed be required between the time this final rule becomes effective and completing any formal FAA action using the normal exemption process as previously described in this notice. Specifically, time is needed for: (1) The FAA to amend 14 CFR part 34 through rulemaking to incorporate the production cutoff and procedures for granting exemption from the new standards; (2) the manufacturer to develop the information needed to support a request; (3) submitting the request for review by FAA and EPA; (4) coordination with other certificating authorities; and (5) EPA and FAA review and final action on the request, i.e., approval or disapproval. Regarding this review and final action, we note that FAA staff involved in reviewing the manufacturers request may also be engaged in conducting the processes to adopt this rule in 14 CFR part 34 and to review emission information on current type certificates to confirm that they meet either Tier 6 or Tier 8 requirements, as previously described. Therefore, we conclude that inadequate time exists to act on an exemption request with certainty for these six engines before their contract deliver dates. Consequently, we conclude that a limited modification to the otherwise universal effective date of the final Tier 6 compliance deadline is appropriate to accommodate the commenter's situation and that for these six specific engines additional lead time is needed due to cost and technical feasibility factors.

We also believe that disrupting the scheduled delivery dates of these engines could risk subjecting the commenter to possible financial penalties for late delivery, with possible follow-on effects for the aircraft manufacturer and airlines. We also find that there is no significant adverse effect on the environment in allowing these six engines to be produced and sold as compliant with Tier 4 standards, especially if four of the engines ultimately comply with the Tier 6 standards.

For the above reasons, and in response to the comments and under our authority under sections 231(a)(3) and (b) to issue final regulations with such modifications to the proposal as the Administrator deems appropriate and to make revised standards effective after such period as the Administrator finds necessary to permit the development and application or requisite technology, giving appropriate consideration to the cost of compliance within such period, we are including an exception provision in the regulations that permits any aircraft engine manufacturer to produce and enter into commerce up to six newly manufactured engines with a date of manufacture, as defined in the regulations, prior to August 31, 2013 that are not certificated to meet Tier 6 emission requirements. These engines must have a type certificate which indicates that they meet the 40 CFR part 87 requirements last updated on October 30, 2009 (i.e., Tier 4). No formal exemption request or approval will be required for these six engines. These engines will be reported to EPA as part of the annual reporting requirement as described above for exempt engines.

We know of no other engine manufacturer that is in this situation today, (i.e., contracted deliveries of engines not meeting the production cut-off within several months of the production cut-off date). However, as a matter of equity and to address situations which we may not be informed of at this time, we are extending this transitional flexibility to all manufacturers.

c. Voluntary Emission Offsets

We requested comment on establishing a voluntary EPA program by which manufacturers could receive emission credits for producing cleaner engines, which they could use to offset higher emissions from exempted engines. An example of such a program was summarized in a memorandum to the docket.[91] The types of programs we were considering would be developed, promulgated, and administered by EPA.

As described in the proposal and summarized here, we expected manufacturers to be interested in generating offsets for one of three purposes. First, manufacturers might choose to generate offsets as part of their justifications for exemptions. Second, manufacturers might choose to generate offsets as part of a justification for being allowed to exceed the numerical limit that FAA and EPA are willing to approve in an exemption request. Third, provided a provision was promulgated to allow this, a manufacturer might also be interested in generating offsets to bank for use for exemptions of engines to be produced after the credit generating engines are produced, or possibly against a future production cutoff.

Under the proposed approach, generation of offsets would be voluntary and would be open to all certifying engine manufacturers. One concept was to allow credits to be generated only from engine models that are introduced after this rule and that had characteristic levels significantly below the otherwise applicable standard (e.g., at least 10 percent below). There was a separate question, however, regarding how to calculate the credit. If we adopted, for example, a 10 percent threshold for eligibility, we would probably also allow credits only to the degree which the NO_X characteristic level was more than 10 percent below the standard.

[90] The FAA has stated to EPA that inadequate time exists for the required formal compliance determination before the production cutoff takes effect.

[91] U.S. EPA, ''Draft Regulatory Text for Voluntary Offset Program,'' Memorandum from Charles Moulis, Assessment and Standards Division, Office of Air Quality and Transportation, June 2011. A copy of this document is in docket number EPA–HQ–OAR–2010–0687.

This would ensure a net improvement in emissions. Also, we could reserve the right to restrict the use of credits so that they were used in a manner that ensured there was no net adverse impact on air quality. Such a program would need to ensure that emission benefits from one aircraft model truly offset the higher emissions from another model. Equivalency factors could be developed to account for differences in the number of LTOs per year and the lifetime of the aircraft.

We received a number of comments on the possibility of implementing a voluntary credit offset program. The ATA expressed significant doubt that EPA had the legal authority to adopt a voluntary emissions offset program. They argued that the standard setting authority under section 231 of the CAA does not appear to provide such authority. ATA further stated that where offsets or emissions trading schemes exist for other source categories, the authority is express. Examples cited were the CAA authority for the trading program under the acid rain program, and the Energy Independence and Security Act authorization for the offset program used under the Corporate Average Fuel Efficiency Standards. Pratt & Whitney provided comments very similar to ATA relative to the lack of EPA's legal authority to create such a program.

The ATA also commented that the voluntary offset program embodied in the proposal would be unworkable in the context of aviation. They noted that unlike cars or trucks, aircraft engine manufacturers have relatively low production volumes and few frequently updated models for generating credits. Also, some manufacturers have more models than others and this could possibly lead to competitive distortions in the market. The AIA and GAMA also raised concerns regarding potential market disruptions. Further, ATA argued that opportunities for generating offsets would be limited by the proposal's high thresholds for generating those credits. In the context of using emission credits for exemptions ATA added that each situation would be unique and it would not be possible to match exemptions to credits, or to assess the further complexities of the ''equivalency factors'' described in the proposal. Finally, they stated that an airline's delivery schedule would be held hostage to the manufacturer's ability to justify credits based on some other engine that the airline is not buying. For these reasons, ATA asked that no offset program be adopted.

Pratt & Whitney stated that the EPA proposal assumes that an offset program would create an incentive for manufacturers to build lower-emissions engines. On the contrary they argued, manufacturers already have that incentive because using the lowest-emitting technology that is available maximizes the life of the engine. Such a program would simply create a windfall to manufacturers whose product lines are already capable of generating credits. The AIA, GAMA, and GE jointly commented that the proposed emission offset program goes beyond the borders of CAEP, and any emissions offset program should be developed within ICAO. General Electric was interested in exploring a potential emission offset program, particularly if the program would be applicable to new engine designs and derivatives that are subject to the proposed Tier 8 standards, and if it created the incentive to adopt new technologies earlier than would otherwise be the case in the absence of such incentives.

We appreciate the concerns raised by the commenters regarding the proposed voluntary offset emission program. We are also encouraged by GE's interest in further discussions about how this program may be useful in the context of the Tier 8 standards and a possible future Tier 8 production cutoff. EPA agrees that the proposal needs to be further developed to address certain aspects of the offset program. We have determined that the time it would take to sufficiently develop the program is incompatible with the need to promptly promulgate the Tier 6 production cutoff standard with a near-term effective date of January 1, 2013. Therefore we are not including the voluntary emission offset program in the final rule at this time. Nonetheless, we continue to see value in such a program for the aviation industry and recommend continuing to consider such a regulatory flexibility in the future.

Although we are deferring action on the proposed voluntary emission offset program for the time being, we believe that such programs are envisioned within the ETM language related to exemptions. Furthermore, we do not agree with the commenters who questioned the EPA's legal authority for adopting a voluntary emissions offset program as part of the aircraft engine emission standards. We are somewhat surprised by the industry commenters who questioned the authority for averaging, banking, and trading (ABT) programs outside of the narrow examples cited in their comments, and we are not yet persuaded by their claims. Note that the U.S. Court of Appeals for the D.C. Circuit has clearly stated that EPA has substantial discretion under the CAA section 231 to adopt final aircraft emission standards as the agency deems appropriate (*National Ass'n of Clean Air Agencies* v. *EPA* 489 F.3d 1221 (D.C. Cir. 2007)). We also wonder to what extent their view represents the industry as a whole, including any aircraft engine manufacturers who also manufacture engines that are subject to other EPA regulations that provide for ABT without the ''express'' statutory authority the commenters claim is necessary. If in future actions we seek additional comments on the legality of ABT programs under our aircraft standards, we will be interested in receiving comments from other stakeholders in the mobile source arena who might have views regarding the arguments presented by the industry commenters above.

In the meantime, we note that several of our mobile source regulations, in addition to the rule cited by industry commenters, have long provided regulated industry with the flexibilities inherent in an ABT program, under the authority of, for example CAA section 213, and none of those subject industries have opposed the creation of such programs or questioned their legal basis. (See, e.g., 40 CFR part 89, subpart C (averaging, banking and trading provisions for nonroad compression-ignition engines); 40 CFR part 90, subpart C (certification averaging, banking and trading provisions for nonroad spark-ignition engines at or below 19 kilowatts); 40 CFR part 91, subpart C (averaging, banking and trading provisions for marine spark-ignition engines); 40 CFR part 92, subpart D (certification averaging, banking and trading provisions for locomotives and locomotive engines); 40 CFR part 94, subpart D (certification averaging, banking and trading provisions for marine compression-ignition engines).) EPA continues to believe that the legal basis of these ABT programs is sound.

4. Potential Phase-In of New Tier 8 NO_X Standards for Newly-Manufactured Engines

We did not propose a production cutoff for the Tier 8 NO_X standards for newly-manufactured engines. This means that engine manufacturers may continue to produce Tier 6 compliant engines of previously certified models after the Tier 8 standards become effective for newly-certified engine models. As noted elsewhere, EPA is working within the ICAO/CAEP framework to develop harmonized international standards for aircraft

turbine engines. At the February 2010 meeting of CAEP, where the CAEP/8 NO_X standards were approved for recommendation to ICAO, the committee decided that further consideration could be given to a related newly-manufactured engine standard pending new information on technology and market responses, although no formal action was taken at the time to explicitly make this a future work item for CAEP.[92]

Assuming a CAEP/8 production cutoff is adopted at some time in the future, we will re-examine the permanent exemption provisions to ensure a timely and orderly phase-out of engine models that do not meet the CAEP/8 NO_X standards. We would expect this to be done through a notice and comment rulemaking process to amend our own regulations.

C. Application of Standards for Derivative Engines

It is very common for a manufacturer to make changes to an originally type certificated engine model that is in production while keeping the same basic engine core and combustor design. In some cases these modifications may affect emissions. As a result, the certificating authority (in our case the FAA) must decide whether the emission characteristics of the modified design were significant enough from the parent engine's certification basis that a demonstration of compliance with more recent emission standards is necessary, or if the changes were minor relative to the parent engine's emission certification basis so that it is considered a derivative version of the original model with no emissions changes. This may be further complicated because of the common practice of making iterative changes over time raises the question as to when the cumulative changes reach a point where a new demonstration of compliance is warranted.

In the past, these determinations were made for turbofan engines by an engineering evaluation that was performed by the engine manufacturer and then reviewed by the FAA. As part of the ICAO/CAEP deliberations leading up to the February 2010 CAEP/8 meeting, a new standardized guidance was agreed upon as described in the ETM. The guidance, which the U.S. fully supported, includes specific criteria that can be used to determine when a design modification requires a new demonstration of compliance with newer emission standards, or when a modification was simple enough to be considered a no emissions change.

We are including the ETM requirements in our regulations to address the longstanding need to provide consistent standards for the decision process regarding derivative engines and applicable emission standards. The definition of ''derivative engines for emissions certification purposes,'' along with the criteria for making this determination, will provide engine manufacturers and the regulators with more certainty regarding emission standard requirements for future modifications made to certificated models. To ensure that the numerical decision criteria can be administered to allow for the consideration of unusual circumstances or special information, we are also providing the FAA with some flexibility to make adjustments to the specific criteria based on good engineering judgment. In summary, if the FAA determines that an engine model is sufficiently similar to its parent engine so as to meet the criteria established in § 87.48, the manufacturer may demonstrate certification compliance and continue production of the engine model to the same extent as allowed for the original engine model. However, if the FAA determines that an engine model is not a derivative for emission certification purposes, the manufacturer would be required to demonstrate compliance with the most recent emissions standards. This determination will be made using numerical criteria consistent with ICAO provisions, and a modified engine model can be considered a ''derivative'' only if it is: (1) Derived from an original engine that had received a U.S. certification, (2) the original engine was certified under title 14 of the CFR, and (3) one of the following conditions is met:

(1) The FAA determined that a safety issue exists that requires an engine modification; or

(2) Emissions from the derivative engines are equivalent to or lower than the original engine.

The proposed rule provided that the engine manufacturer could show emissions equivalency by demonstrating that the difference between emission rates of a derivative engine and the original engine are within the following allowable ranges, unless otherwise adjusted using good engineering judgment as determined by the FAA:

±3.0 g/kN for NO_X
±1.0 g/kN for HC
±5.0 g/kN for CO
±2.0 SN for smoke

The proposed rule also provided that engine models represented by characteristic levels at least five percent below all applicable standards would be allowed to demonstrate equivalency by engineering analysis. In all other cases, the manufacturer would be required to test the new engine model to show that its emissions met the equivalency criteria.

We received three significant comments on the proposed derivative provisions. First, ATA, PW, and Dassault-Aviation (DA) pointed out that the proposed criteria contained a substantial deviation from the expressed intent of the proposal and the ETM guidance. Specifically, they noted that the ETM provides that ''If a modified engine remains on the existing type certificate, it may retain the existing certification basis of the parent engine if the modification(s) * * * results in a decrease of the absolute emissions levels. * * *'' They pointed out, however, that the proposed rule provided that the certificate holder must demonstrate '' * * * the proposed derivative engine model's emissions meet the applicable standards and differ from the original model's emission rates only within * * *'' specified ranges for each pollutant. For example, the specified range is + or − 3 g/kN for NO_X. The commenters stated that this is more stringent than the ETM, and could discourage cleaner engines that are not clean enough to meet the next tier of standards. They asked that the final rule be consistent with the ETM to prevent this untoward effect.

We agree that the regulations should allow for such engines to be considered derivatives, even if the difference was outside the ''no emission change'' range. This allowance is clearly consistent with the ETM and was inadvertently left out of our proposed language. Therefore, the final regulations contain this allowance.

Second, AIA and GAMA jointly commented that the term ''new model'' was inappropriate when used to determine which engine models could demonstrate equivalency by engineering analysis, and when the manufacturer would be required to test the new engine model to demonstrate compliance with the equivalency criteria. They argued that because this provision applies to changes made to an existing engine, it could cause an engine manufacturer to conduct an additional emissions test in cases where a very small change was made to the engine

[92] ICAO, ''Committee on Aviation Environmental Protection (CAEP), Report of the Eighth Meeting, Montreal, February 1–12, 2010,'' CAEP/8–WP–80. A copy of this document is in docket number EPA–HQ–OAR–2010–0687.

due to a performance or engine weight change. The commenters recommended that this be altered to allow a manufacturer to consider ''* * * such emissions changes by analysis prior to this point, and only if such analysis revealed a deterioration that pushed the engine very close to the emission limits that the manufacturer be requested to complete an engine emissions test.''

The AIA and GAMA also jointly commented on the proposed regulatory text that states if the characteristic level of the original certificated engine model before modification is at or above 95 percent of the applicable standard for any pollutant, you must measure the proposed derivative engine model's emissions for all pollutants to demonstrate the derivative engine's resulting characteristic levels will not exceed the applicable emission standards. They claimed that the use of the term ''you must measure'' also implies further engine testing when additional analysis may likely prove sufficient.

We agree that the term ''new model'' should be modified and have instead used the term ''new engine configuration'' in the final regulations. We want to clarify, however, that the regulations do explicitly require engine testing when an original engine's emissions are within 5 percent of any emission standard. This text does not allow engineering analysis in such cases. We continue to believe this to be the appropriate policy. Given the greater uncertainty of engineering analysis relative to actual testing, we cannot rely on it for engines very close to the standard. This provision is also consistent with the ETM. Therefore, we are promulgating this requirement as proposed.

Third, AIA, GAMA, and GE commented that as a general matter, EPA should not codify the ETM's derivative engine decision criteria because the ETM guidance will evolve over time and the Agency's rigid regulations will not, even allowing for the FAA flexibility to use good engineering judgment if necessary when deciding what is or is not a derivative engine. They concluded it was simply better to let the FAA rely on the ETM guidance in its decision making. As noted by the commenters, the ICAO ETM itself is a guidance document for use by aviation authorities. It does not represent a standard or any other enforceable regulatory requirement. In the particular case cited by the commenters, they appear to ask that FAA be given unlimited discretion to determine which engines are subject to each new tier of standards.

In response to the comment, we also note that the Clean Air Act directs EPA to establish air pollution emission standards for aircraft engines. (See 42 U.S.C. 7551(a)(2)(A).) Implementation of this statutory directive mandates that we specify enforceable air pollution emission standards and control requirements for aircraft engines in regulatory form. We believe that it is reasonable for us to also establish other associated requirements in regulatory form. Our final rule achieves an appropriate balance between providing FAA discretion to implement the standards, and the need to establish aircraft engine emission regulations that ensure consistency in application.

We also disagree with the suggestion that the ETM will evolve over time, but that our regulations will not. As a working member of ICAO's Committee on Aviation Environmental Protection, we will participate in developing any relevant revisions to the ETM and will make appropriate adjustments to our regulations as needed.

We continue to believe that the ETM specifications for ''no emissions change'' are appropriate objective criteria for derivative engines. Thus, because we are codifying regulatory provisions to objectively specify when engines are considered to be ''derivative engines'', we are promulgating regulatory provisions consistent with the ICAO ETM guidance.

D. Annual Reporting Requirements

In May of 1980, ICAO's Committee on Aircraft Engine Emissions (CAEE) recognized that certain information relating to environmental aspects of aviation should be organized into one document. This document became ICAO's ''Annex 16 to the Convention on International Civil Aviation, International Standards and Recommended Practices, Environmental Protection'' and was split into two volumes—Volume I addressing Aircraft Noise topics and Volume II addressing Aircraft Engine Emissions. Annex 16 has continued to grow and today Annex 16, Volume II includes a list of mandatory requirements to be satisfied in order for an aircraft engine to meet the ICAO emission standards.[93] These requirements include information relating to engine identification and characteristics, fuel usage, data from engine testing, data analysis, and the results derived from the test data. Additionally, this list of aircraft engine requirements is supplemented with voluntarily reported information which has been assembled into an electronic spreadsheet entitled ''Emissions Databank'' (EDB)[94] for turbofan engines with maximum thrust ratings greater than 26.7 kN in order to aid with emission calculations and analysis as well as help inform the general public.

In order to understand how current gaseous emission standards are affecting the current fleet, we need to have access to timely, representative emissions data of the engine fleet at the requisite model level. The EDB is a useful tool for providing a general overview of the aircraft fleet, as it contains information on engine exhaust emissions and performance tests. However, it is not updated on a consistent basis, it contains a varying amount of voluntarily reported data from each manufacturer, and it does not specifically list every engine sub-model.[95] It also does not contain information on smaller thrust category turbofans or turboprops, and contains no information on past or recent engine production volumes. We need this data to conduct accurate emission inventories and develop appropriate policy. Accordingly, we do not consider the EDB to be a sufficient tool upon which to base policy decisions or adopt future standards. Furthermore, in the context of EPA's standards-setting role under the Clean Air Act with regard to aircraft engine emissions, it is consistent with our policy and practice to ask for timely and reasonable reporting of emission certification testing and other information that is relevant to our mission. Under the Clean Air Act, we are authorized to require manufacturers to establish and maintain necessary records, make reports, and provide such other information as we may reasonably require to discharge our functions under the Act. (See 42 U.S.C. 7414(a)(1).)

Therefore, we proposed to require that each aircraft engine manufacturer submit a production report directly to EPA[96] with specific information for each individual engine sub-model that: (1) Is designed to propel subsonic aircraft, (2) is subject to our exhaust emission standards, and (3) has received

[93] ICAO, ''Annex 16 to the Convention on International Civil Aviation, Environmental Protection, Volume II, Aircraft Engine Emissions,'' Part III, Chapter 2, Section 2.4. A copy of this document is in docket number EPA–HQ–OAR–2010–0687.

[94] United Kingdom, Civil Aviation Authority, ''ICAO Emissions Databank.'' Available at the Civil Aviation Authority Web site *www.caa.co.uk/default.aspx?catid=702*.

[95] Under today's regulations, a grouping of engines with an essentially identical emission-related design are defined to be an ''engine sub-model''. Engines with slightly different designs are defined to be an ''engine model''.

[96] The report would be submitted only to EPA. No separate submission or communication of any kind is required for the FAA.

a U.S. type certificate. More specifically, the scope of the proposed production report would include turbofan engines as described above with maximum rated thrusts greater than 26.7 kN, i.e., those subject to gaseous emission and smoke standards. In addition, it would include turbofans with maximum rated thrusts less than or equal to 26.7 kN and all turboprop engines, i.e., those only subject to smoke standards. We also proposed that this specific exhaust emission related information be reported to us in a timely manner, which will allow us to conduct proper emissions inventory analyses of the existing fleet and to ensure that any public policy we create based on this information will be well informed. All of the specific reporting items we proposed were the same as requested for the EDB, with the exception of total annual engine production volumes, information on type certificates, and the emission standards to which the engine sub-model was certified. We anticipated that the new emissions database would be a significant improvement over the current EDB because the data reporting is mandatory, it will be comprehensive in that it covers all engine models, and it must be updated annually.

In addition to some minor comments which are addressed in the analysis of comments document, we received comments from engine manufacturers addressing two specific areas of the proposed production reporting provision. First, the Aerospace Industries Association (AIA), General Aviation Manufacturers Association (GAMA) and Pratt & Whitney (PW) commented that annual production volume data is considered confidential business information (CBI) and as such, it should be exempt from Freedom of Information Act (FOIA) requests or other methods of public disclosure. Second, AIA, GAMA, PW and Williams International pointed out that for those engines which are only subject to smoke standards (turbofans with maximum thrust ratings less than or equal to 26.7 kN, and turboprops), manufacturers are not required under current regulations to measure gaseous emissions (HC, CO, NO_X, CO_2). As such, data on these gaseous emissions, as well as information used to measure gaseous emissions (reference pressure ratio and fuel flow data) are not readily available for these engines. Further, smoke data by mode of the LTO cycle may not be available for these older engines. These manufacturers pointed out that new testing of such engines would be required to generate these data, and that appropriate test procedures for these engines do not currently exist.

We understand and respect the needs of manufacturers to maintain the confidentiality of their legitimately proprietary data. However, we do not include in our regulations an up-front blanket CBI determination for any of the other mobile source sectors, and do not believe it is necessary here. As such, in response to the comments, we are including regulatory language patterned after existing regulations for several other mobile source categories which sets forth how we would treat—on a case by case basis—submitted data which is covered by a CBI claim from the manufacturer as provided by 40 CFR part 2. The addition of this provision will ensure that no information that is legitimately protected CBI gets inadvertently released to the public.

We do not believe it is appropriate to require additional testing for turbofans with maximum thrust ratings less than or equal to 26.7 kN and turboprops specifically for production reporting purposes. Thus, for these engines, we will not be requiring the submission of HC, CO, NO_X, CO_2, reference pressure ratio or fuel rate data. Further, we will not require additional testing of older engines for which smoke data by specific LTO cycle segment is not currently available.

We also noted in the proposal that the reported information would be used in conjunction with the NO_X and CO_2 emission data already required to be submitted to us under section 87.64 for purposes of greenhouse gas (GHG) reporting to establish. This would effectively provide us with a complete and comprehensive engine exhaust emissions database. We noted our expectation that most manufacturers would likely add the proposed information items to the annual GHG report. No comments were received on combining the two reports. After further deliberation, we have decided to require a single, integrated report in this final rule to eliminate any possible confusion regarding the two separate reports and make reporting more efficient.

The incremental reporting elements for each affected gas turbine engine sub-model are listed below. Although not proposed, we have added engine type to the list for completeness. The reporting elements of the existing GHG report are also identified for completeness.

- Company corporate name as listed on the engine type certificate (GHG);
- Engine Type (turbofan, mixed turbofan, or turboprop);
- Calendar year for which reporting (GHG);
- Complete sub-model name (This will generally include the model name and the sub-model identifier, but may also include an engine type certificate family identifier) (GHG);
- The type certificate number, as issued by the FAA (Specify if the sub-model also has a type certificate issued by a certificating authority other than the FAA) (GHG);
- Date of issue of type certificate and/or exemption, i.e. month and year (GHG);
- Emission standards to which the engine is certified, i.e., the specific Annex 16, Volume II, edition number and publication date in which the numerical standards first appeared.
- If this is a derivative engine for emissions certification purposes, identify the original certificated engine model.
- Engine sub-model that received the original type certificate for the engine type certificate family;
- Production volume of the sub-model for the previous calendar year (even if zero). If an engine sub-model is no longer being produced, state that the engine sub-model is not in production and list the date of manufacture (month and year) of the last engine produced;
- Regarding the above production volume report, specify (if known) the number of engines that are intended for use on new aircraft and the number intended for use as certified (non-exempt) spare engines on in-use aircraft;
- Reference pressure ratio (GHG) (not applicable to turbofans with maximum thrust ratings less than or equal to 26.7 kN, and turboprops);
- Combustor description (type of combustor where more than one type available on an engine);
- Engine maximum rated thrust output, in kilonewtons (kN) or kilowatts (kW) (depending on engine type) (GHG);
- Unburned hydrocarbon (HC) mass (g) total (weighted) and over each segment of the Landing and Take-off Cycle (LTO), i.e. Take-off, Climb, Approach, Taxi/Ground Idle (not applicable to turbofans with maximum thrust ratings less than or equal to 26.7 kN, and turboprops);[97]
- Unburned hydrocarbon (HC) characteristic level (i.e. mass of hydrocarbons over LTO cycle/Rated Thrust (Dp/Foo)) (not applicable to turbofans with maximum thrust ratings less than or equal to 26.7 kN, and turboprops);[98]

[97] See Regulation Part 87—*Control of Air Pollution from Aircraft and Aircraft Engines, Subpart E*, § 87.42 *Production report to EPA* for definitions.

[98] Dp/Foo: total gross emissions of each gaseous pollutant (mass)/rated thrust (g/kN).

• Carbon monoxide (CO) mass (g) total (weighted) and over each segment of the entire Landing and Take-off Cycle (LTO) (i.e. Take-off, Climb, Approach, Taxi/Ground Idle) (not applicable to turbofans with maximum thrust ratings less than or equal to 26.7 kN, and turboprops);

• Carbon monoxide (CO) characteristic level (i.e. mass of CO over LTO cycle/Rated Thrust (Dp/Foo)) (not applicable to turbofans with maximum thrust ratings less than or equal to 26.7 kN, and turboprops);

• Nitrogen oxides (NO_X) mass (g) total (weighted) and over each segment of the entire Landing and Take-off Cycle (LTO) (i.e. Take-off, Climb, Approach, Taxi/Ground Idle) (GHG) (not applicable to turbofans with maximum thrust ratings less than or equal to 26.7 kN, and turboprops);

• Nitrogen oxides (NO_X) characteristic level (i.e. mass of NO_X over LTO cycle/Rated Thrust (Dp/Foo)) (GHG) (not applicable to turbofans with maximum thrust ratings less than or equal to 26.7 kN, and turboprops);

• Smoke number total and over each segment of the entire Landing and Take-off Cycle (LTO) (i.e. Take-off, Climb, Approach, Taxi/Ground Idle), if available;

• Smoke number characteristic level;

• Carbon dioxide (CO_2) mass (g) total (weighted) and over each segment of the entire Landing and Take-off Cycle (LTO), (i.e. Take-off, Climb, Approach, Taxi/Ground Idle (GHG)) (not applicable to turbofans with maximum thrust ratings less than or equal to 26.7 kN, and turboprops);

• Number of tests run per sub-model (GHG);

• Number of engines tested per sub-model (GHG);

• Fuel flow (grams/second) total (weighted) and over each segment of the Landing and Take-off Cycle (LTO) (i.e. Take-off, Climb, Approach, Taxi/Ground Idle) (GHG) (not applicable to turbofans with maximum thrust ratings less than or equal to 26.7 kN, and turboprops); and

• Any additional remarks to the EPA.

The annual report is required to be submitted for each calendar year in which a manufacturer produces any engine subject to emission standards as previously described. These reports will be due by February 28 of each year, starting with the 2014 calendar year, and cover the previous calendar year. This report shall be sent to the Designated EPA Program Officer. Where information provided for any previous year remains valid and complete, the engine manufacturer may report the production figures and state that there are no changes instead of resubmitting the original information. To facilitate and standardize reporting, we expect to specify a particular format for this reporting in the form of a spreadsheet or database template that we provide to each manufacturer. As noted previously, we intend to use the reports to help inform any policy approaches regarding aircraft engine emissions that we consider, including possible future emissions standards. The information will also enhance the general public's understanding of the emission characteristics of aviation gas turbine engines and allow independent development of emission inventories and assessments of local environmental effects. Subject to the applicable requirements of 42 U.S.C. 7414(c), 18 U.S.C. 1905, and 40 CFR part 2, all data received by the Administrator that is not confidential business information may be posted on our Web site and will be updated annually. We have assessed the potential reporting burden associated with this annual reporting requirement. That assessment is presented in sections V. and IX.B of this notice.

E. Standards for Supersonic Aircraft Turbine Engines

We proposed CO and NO_X emission standards for turbine engines that are used to propel aircraft at sustained supersonic speeds, i.e., supersonic aircraft to complement our existing HC standard for these engines. These standards were originally adopted by ICAO in the 1980s, and our adoption of NO_X and CO standards for commercial engines in 1997 omitted coverage of these pollutants for supersonic commercial engines that were then in use. The lack of EPA CO and NO_X standards for engines used by supersonic aircraft has had no practical effect, because no such engines have been certified by the FAA. Also, none of the engines used on these aircraft are currently in production.

The Aerospace Industries Association (AIA) and the General Aviation Manufacturers Association (GAMA) commented that within CAEP it was agreed that these standards are ''not appropriate for future products'' and should not be adopted by EPA.[99] However, to meet U.S. treaty obligations under the Convention on International Civil Aviation as previously described in section I.C, we believe it is necessary and appropriate to adopt these conforming standards. Therefore, we are promulgating the standards for supersonic aircraft as proposed. As previously noted, this action has no practical effect, and simply aligns EPA standards with the rest of the world. (See section III.G for a brief discussion of potential revised emission standards for future engine designs that may be used on supersonic aircraft.)

F. Amendments To Test and Measurement Procedures

We are incorporating by reference into the 40 CFR 87.60 regulatory text, amendments to ICAO's International Standards and Recommended Practices for aircraft engine emissions testing and certification.[100] [101] [102] These amendments to Annex 16, Volume II are primarily intended to ensure that the provisions reflect current certification practices. The amendments make clarifications or add flexibilities for engine manufacturers. They are described below.

• Standardizing the terminology relating to engine thrust/power

• Clarifying the need to correct measured results to standard reference day and reference engine conditions

• Allowing a certificating authority to approve the use of test fuels other than those specified during certification testing

• Allowing materials other than stainless steel in the sample collection equipment

• Clarifying the appropriate value of fuel flow to be used at each LTO test point

• Clarifying exhaust nozzle terminology for exhaust emissions sampling

• Allowing an equivalent procedure for gaseous emission and smoke

[99] The CAEP position referred to by AIA and GAMA is based on the expectation that future designs for supersonic aircraft will be significantly different from past designs. The agreement was reached at CAEP/8 to evaluate emission standards for these engines as a future work item.

[100] A strikeout and highlighted version of the amendments is contained in Attachment A to ICAO state letter AN 1/61.2, AN 1/62.2–07/32 entitled, ''Proposed Amendment to International Standards and Recommended Practices, Environmental Protection, Annex 16 to the Convention on International Civil Aviation, Volume II Aircraft Engine Emissions, May 27, 2007. A copy of this document is in docket number EPA–HQ–OAR–2010–0687.

[101] ICAO, ''International Standards and Recommended Practices, Annex 16 to the Convention on International Civil Aviation, Environmental Protection, Volume II Aircraft Engine Emissions,'' Third Edition, July 2008, International Civil Aviation Organization. This document contains the full text of ICAO standards and practices and is in docket number EPA–HQ–OAR–2010–0687.

[102] ICAO, ''International Standards and Recommended Practices, Annex 16 to the Convention on International Civil Aviation, Environmental Protection, Volume II Aircraft Engine Emissions, Amendment 7, effective July 18, 2011'' Third. A copy of this document is in docket number EPA–HQ–OAR–2010–0687.

measurement if approved by the certificating authority

Manufacturers are either already voluntarily complying with these changes or will be even in the absence of a final rule. Our adoption of these test procedure amendments is, therefore, unlikely to require new action by manufacturers beyond what they have already done to meet ICAO's adopted and recommended amendments.

Our incorporation by reference of the ICAO test procedure makes most of the existing subpart G and all of subpart H of part 87 obsolete. Therefore, we are removing these sections from the regulation, as proposed.

G. Possible Future Revisions to Emission Standards for New Technology Turbine Engines and Supersonic Aircraft Turbine Engines

As a general matter, emission standards not only apply to all conventional turbofan aircraft engines greater than 26.7 kN, but also to all aircraft engines designed for applications that otherwise would have been fulfilled by turbofan aircraft engines. The high price of jet fuel, current emphasis on fuel economy, and need to reduce emissions have renewed interest in open rotor propulsion designs for future aircraft gas turbine engines. Essentially, the fan of an open rotor engine is not contained within an engine nacelle as it is with a conventional turbofan engine. This design has also been referred to as an unducted fan, propfan, or ultra-high bypass engine. At least two engine manufacturers are actively pursuing such designs for certification in the later part of this decade.

It now appears that certain aspects of EPA's gas turbine engine emission standards may be incompatible with these new designs. For example, the current landing and takeoff cycle for emissions certification is based on conventional engine designs where a significant amount of thrust is generated by an idling engine. Specifically, idle emissions are measured and calculated at seven percent of the engine's rated thrust. However, the fan/prop blades of an open rotor engine may be variable in pitch and this may allow the blades to be ''feathered'' at idle. In that position, the blades are rotated so very little thrust is generated as the engine idles and generates emissions. Also, future aircraft using these engine designs may fly at somewhat slower speeds. This might affect the time these aircraft spend during the climbout mode of the landing and takeoff cycle. Therefore, the traditional landing and takeoff cycle used in turbofan engine emissions certification may need to be revised in the future to accommodate open rotor engines.

We will be working within CAEP to evaluate the differences between conventional turbine engine and open rotor engine technologies, and to revise the emission standards and test procedures as appropriate for these latter engines. If any changes are required, EPA will undertake rulemaking to revise our regulations accordingly.

There may also be changes in the emission standards and test procedures for engines used to power future supersonic transport aircraft designs. The emission standards for these engines were originally developed in the early 1970s in response to the Aerospatiale-BAC Concorde. Since that time, there have been varying levels of interest in developing a new generation of supersonic transport. As a result, the current CAEP work program is evaluating the status of supersonic aircraft engine development and the potential need for new emission standards and test procedures.[103] Our recent discussions with engine manufacturers indicate that no substantive work is being undertaken at this time, however. We will continue to work within CAEP on this issue and undertake rulemaking to revise the regulations for supersonic aircraft engines as appropriate.

V. Description of Other Revisions to the Regulatory Text

In addition to the changes discussed above, we are including a number of other changes to the regulatory program. Most of these changes are designed to bring the program into conformity with current technology and current technical or policy practice. Each of these is discussed below.

A. Applicability Issues

This section discusses how this final rule relates to engines used in military and noncommercial civilian aircraft. We do not believe these changes will have practical significance for current engine models because the changes align with manufacturers' current practice in certifying their engines.

1. Military Engines

We do not intend today's action to have any impact on engines installed on military aircraft, or new aircraft that are destined to be converted for military use. Military aircraft are not required to have FAA standard airworthiness certificates, and our 1997 endangerment finding for NO_X and CO emissions and resulting standards did not cover military aircraft (see 62 FR at 25359). As such, engines used in military aircraft are not required to meet EPA emission standards, since our current regulations define ''aircraft'' subject to our rules as any airplane for which a U.S. standard airworthiness certificate (or foreign equivalent) is issued. (See 40 CFR 87.1(a) of the existing regulations.) Currently, manufacturers certificate some engine models used in military aircraft with the FAA (with respect to emissions), because these engine models also have commercial applications and have to be certificated for such use. Our new standards and requirements will continue to apply only to engines used in aircraft for which standard airworthiness certificates are required, and thus are not applicable to engines used in military aircraft. It is not our intent to interfere with current practice with regard to engine models with joint commercial/military applications to the extent such engines are used in military aircraft. Although civilian aircraft applications of all such engines would be subject to the new standards and production cutoff, in the NPRM we proposed to include a statement in the regulations to clarify that the proposed production cutoff would not apply for previously certificated engines that are installed and used in military aircraft. One manufacturer commented that the definition of ''military aircraft'' we proposed should extend to sales of military aircraft outside of the U.S. While we believe the regulations as written do not apply to foreign sales of military aircraft, we are nonetheless revising our proposed definition of ''military aircraft'' to clarify that foreign aircraft considered military under international laws and agreements are not covered by 40 CFR part 87.

2. Noncommercial Engines

Prior to this action, section 87.21(d) specified that gaseous emission standards applied to engines used in commercial applications with rated thrusts greater than 26.7 kN. These are engines intended for use by an air carrier or a commercial operator as defined in the Chapter I, Title 49 of the United States Code and Title 14 of the Code of Federal Regulations. Therefore,

[103] The CAEP Working Group 3 has taken the position that engine development programs for future supersonic aircraft applications should be focused on achieving the emission standards that are applicable to subsonic aircraft engines. Past supersonic aircraft engines required the use of afterburner technology to achieve supersonic speeds. Future supersonic aircraft are expected to use engines without that technology, making them more similar to their subsonic counterparts.

engines of equivalent thrust ratings that are used in aircraft certificated by the FAA that are used in non-revenue, general aviation service were not required to comply with our current HC, CO, and NO_X exhaust emission standards in § 87.21(d). They were and are subject, however, to the current standards for smoke and fuel venting.

In today's action we are applying the gaseous emission standards for commercial engines to their noncommercial civilian counterparts that are required to obtain standard airworthiness certificates. There are a couple of reasons for this action. First, the ICAO Annex 16, Volume II standards and recommended practices apply equally to commercial and noncommercial engines, and our rules' previous failure to reflect this meant that our requirements did not fully conform to ICAO's standards. Second, manufacturers already emissions certify engines that are used in non-revenue, general aviation service to these standards. Therefore, this provision simply incorporates the status quo.

In order to make EPA standards conform to ICAO's, we needed to, in addition to promulgating the necessary regulatory amendments, update the underlying finding regarding the need to limit gaseous emissions from commercial and non-commercial civilian aircraft, pursuant to CAA section 231(a)(2)(A). In 1997, our analysis and finding, and hence our regulations, were limited to commercial aircraft emissions. (See 62 FR at 25358.) In conjunction with the NPRM for this final rule, we proposed to expand that analysis and finding to include gaseous emissions from both commercial and non-commercial civilian aircraft engines with rated thrusts greater than 26.7 kN. We received no comments on that proposed finding, and are therefore finalizing our emissions assessment supporting this finding, which is contained in the docket for this rulemaking.[104]

B. Non-Substantive Revisions

We are also taking the opportunity to revisit the clarity of other regulatory provisions in part 87. Many of these provisions were first written 30 or 40 years ago with little or no change since then. We are revising the text related to some of these provisions to better organize, clarify, and update the regulations. Our goal is to revise the regulations in part 87 to properly organize the content of the regulation, use clearer language to describe the applicable requirements, clarify some definitions, and clear up a variety of terms and current practices that have not been adequately addressed.

Except as discussed in previous sections, the changes to part 87 are not intended to significantly change the certification and compliance program. We did not reopen for comment the substance of any part of the program that remains unchanged substantively.

This rule includes the following definitions and other minor changes in addition to those changes described earlier in this section or in section III.

The definition of the term ''aircraft'' is being revised to be consistent with its meaning under FAA regulations in 14 CFR 1.1. The existing part 87 definition limits ''aircraft'' to be only those aircraft issued an airworthiness certificate. This was done as a way to specify the applicability of the standards. However, this can cause confusion in a variety of ways. For example, this departs from the plain meaning of ''aircraft,'' as well as from the meaning given under the Clean Air Act and Title 49 of the United States Code. The revised definition aligns with these statutory definitions. The changed wording is intended to clarify the existing policy without changing it.

Text specifying general applicability is being added to part 87.3 to be consistent with the new definition of ''aircraft'' and maintain the effective applicability of the existing regulations, which uses narrow definitions to limit applicability. For example, the existing regulations limit the applicability of the standards by defining ''aircraft'' to only include fixed-wing airplanes with airworthiness certificates. They exclude non-propulsion engines from the definition of ''aircraft engine'' and turboshaft engines from the definition of ''aircraft gas turbine engine.'' We believe it is more appropriate to explicitly exclude these engines in an applicability section than to rely on readers finding these exclusions in the definitions section. We are also renaming part 87.3 as ''General applicability and requirements'' and reorganizing the content for clarity. Finally, we are replacing the existing regulatory text related to federal preemption for exempted engines in part 87.7(f) with a codification of the statutory preemption language in part 87.3 and an explanatory note that the statutory preemption applies to exempted engines because they are certified to prior-tier standards.

ICAO Annex 16, Volume II is being incorporated by reference for test procedures. This involves a broader reference to Annex 16, with less content repeated in part 87. However, this does not substantively change the test procedures that apply since the existing procedures are based directly on Annex 16, Volume II. As part of this change, we are adding the ICAO definition of ''characteristic level'' to properly describe how manufacturers demonstrate that they meet applicable standards.

Definitions are being added for ''date of introduction,'' ''date of manufacture,'' and ''derivative engine for emissions certification purposes,'' and the definition of ''engine model'' is being revised, to more carefully describe when new emission standards apply to specific aircraft engines. These definitions are generally consistent with the most common understandings of these terms by industry and FAA, and with the CAEP/8 recommendation for adoption by ICAO. Except for engines subject to exemptions, there will be no more engines required to be certified to the standards specified in part 87.21, so changing the definition of ''engine model'' will not change the requirements for engines certified to the Tier 4 or earlier standards. For the benefit of the reader, we are also reprinting the following definitions that remain unchanged:

- Aircraft engine
- Aircraft gas turbine engine
- Class TP
- Class TF
- Class T3
- Class T8
- Class TSS
- Commercial aircraft gas turbine engine
- Fuel venting emissions

Specific provisions are being added to define and require the use of ''good engineering judgment.'' This applies for instances where the regulation cannot spell out every technical detail of how a manufacturer should comply with the regulation. For example, the regulations rely on good engineering judgment being used on the engineering analysis of emissions equivalency for derivative engines (part 87.48(b)(2)), and for applying the turbofan test procedures to turboprop engines (part 87.60(a)). The general approach for implementing good engineering judgment is to allow manufacturers to exercise well substantiated and explained technical judgment subject to potential EPA and FAA review (as appropriate). The consequences of disagreements with a manufacturer's decision would depend

[104] U.S. EPA, ''Final Finding for Commercial and Noncommercial Turbofan and Turbojet Aircraft Emissions,'' memorandum from John Mueller, Assessment and Standards Division, Office of Transportation and Air Quality, March 2012. A copy of this document is in docket EPA–HQ–OAR–2010–0687.

on whether we believe the manufacturer made the decision in good faith. Where the manufacturer makes its decision in good faith, EPA or FAA could require a different approach for future work if we believe it would represent better engineering judgment. We believe these provisions reflect the spirit of the approach being used today to interpret the applicable regulations.

Provisions are being added specifying rounding practices for rated output, rated pressure ratio, and calculated emission standards; generally specifying that they be expressed to at least three significant figures. The primary exception to this is the specification that smoke numbers be expressed to one decimal place. These specifications are consistent with how manufacturers are generally certifying engines today. Defining how to round these values would prevent manufacturers in the future from effecting small changes in the level of the emission standards to which they certify their engines. This is because standards are calculated using the numerical values of the rated output and rated pressure ratio. Without these specifications, manufacturers could subject themselves to a slightly less stringent standard by selectively rounding or truncating an engine model's rated output to be low and its rated pressure ratio to be high, or by strategically rounding the calculated standard itself. While this has not been an issue in the past, it is important to maintain a level playing field for all manufacturers as standards become more stringent. We do not expect any more engines type-certificated to the standards specified in part 87.21, so the specified procedures for rounding these values will not change the requirements for engines certified to the Tier 4 or earlier standards

Definitions are being added for ''turbofan engine,'' ''turbojet engine,'' ''turboprop engine,'' ''turboshaft engine,'' ''supersonic,'' and ''subsonic'' to avoid any uncertainty about how the standards apply to different types of engines. The definitions are intended to reflect the plain meaning of these terms.

The regulations include the following additional amendments:

Regulation cite	Description of amendment	Notes
87.1	Add definition of ''characteristic level''	The characteristic level is established by ICAO Annex 16 as a means of calculating a statistical adjustment to measured emission results to take into account the level of uncertainty corresponding to the number of tests run for a given pollutant.
87.1	Remove definitions for ''emission measurement system'', ''power setting'', ''sample system'', ''shaft power'', ''taxi/idle (in)'', and ''taxi/idle (out)''.	These terms will no longer be used in part 87. There will be no more engines certified to the standards specified in § 87.21, so removing these definitions will not change the requirements for engines certified to the Tier 4 or earlier standards.
87.1	Revise definition of ''exhaust emissions'' and ''smoke''.	The new language references the emission testing procedures, since that is the practical meaning of these terms in part 87. This clarifies, for example, that emissions from the nozzle of an aircraft or aircraft engine count as exhaust emissions only if they are measured using the specified test procedures. There will be no more engines certified to the standards specified in § 87.21, so revising these definitions will not change the requirements for engines certified to the Tier 4 or earlier standards.
87.1	Define ''new'' instead of defining ''new aircraft turbine engine''.	The regulations also refer to new turboprop engines and new engines used for supersonic aircraft, so it is appropriate to define the adjective as it relates to these different kinds of engines. This approach does not change the meaning of the applicable terms and therefore has no bearing on the requirements that applied under the standards specified in § 87.21.
87.1	Revise the definition of ''standard day condition'': (1) Remove the reference to the 1976 U.S. Standard Atmosphere, (2) correct a typographical error in the humidity specification, and (3) change the atmospheric pressure units from Pa to kPa.	The editorial changes do not involve any substantive change in the specified conditions.
87.2	Remove FAA from the list of acronyms in § 87.2 and add it to the set of defined terms in § 87.1.	This is intended to not involve a change in emission standards or implementation.
87.3	Add provisions describing the scope of applicability of part 87.	The broad statement in § 87.3 is not intended to conflict with the applicability statements in individual subparts, since those additional statements indicate that certain requirements in part 87 apply more narrowly. All applicability statements in the rule are intended to be consistent with current policy.
87.3	Remove the provision related to preemption of state standards for exempted aircraft and replace it with the preemption provision in the Clean Air Act.	This change more carefully tracks the statutory provisions related to preemption.
87.5	Move the provisions related to special test procedures to § 87.60.	This provision, and the similar provision from § 87.3(a), should be described together in the context of the testing requirements in subpart G.
87.21	Identify the specific date when the smoke standard started to apply for turbofan engines with rated output less than 26.7 kilonewtons.	This corrects a typographical error from the **Federal Register.**
87.21	Revise paragraph (f) to correctly reference the regulatory sections that describe the applicable test procedures.	This change is strictly editorial.

Regulation cite	Description of amendment	Notes
87.60	Revise the description of test procedures to rely broadly on the procedures specified in ICAO Annex 16. This includes a variety of recent changes to the Annex 16 procedures.	There will be no more engines certified to the standards specified in § 87.21, so any changes to the test procedures will not change the requirements for engines certified to the Tier 4 or earlier standards. Moreover, engine manufacturers are expected to perform all their testing based on the current test procedures from ICAO Annex 16, regardless of the standards that apply.

C. Clarifying Language for Regulatory Text

The regulations incorporate the changes described in this preamble. The following table highlights and clarifies several provisions that may not be obvious to the reader.

Regulation cite	Note
87.1, Definition of ''aircraft''	This definition would revert to the normal FAA definition of aircraft, rather than the much narrower current definition in part 87. To understand this change, the definition needs to be considered along with the changes to applicability in 87.3(a).
87.1, Definition of ''date of manufacture''	This is generally the same definition as given in ICAO Annex 16. However, our definition addresses certain specific circumstances that could possibly occur, but that are not addressed by the Annex. For example, our definition would provide a date of manufacture for an engine not previously documented by a manufacturer.
87.1, Definition of ''derivative engine for emissions certification purposes''.	It is important to consider this definition in combination with the definition of ''engine type certificate family''.
87.1, Definition of ''engine model''	A manufacturer or FAA may further divide an engine model into sub-models. Engines from an engine model must be contained within a single engine type certificate family. Where FAA determines that engines are not sufficiently similar to be included under a single type certificate, they will not be considered to be the same engine model for purposes of part 87.
87.1, Definition of ''military aircraft'' and 87.23(d).	In § 87.23(d) we clarify that the production cutoff does not apply for military aircraft engines (even if they have been certificated). In § 87.1, we define military aircraft to primarily mean ''aircraft owned by, operated by, or produced for sale to the armed forces or other agency of the federal government responsible for national security (including but not limited to the Department of Defense).'' For example, aircraft owned by the U.S. Coast Guard would be military aircraft. In response to comments, we added a clarification that military aircraft also include ''other aircraft considered to be military aircraft under international law and conventions.''
87.1, Definition of ''production cutoff date''	The production cutoff date for the Tier 6 NO_X standards is December 31, 2012.
87.1, Definition of ''spare engine''	Newly manufactured spare engines may be excepted under § 87.50.
87.1, Definitions of tiers	As specified in the definitions of ''Tier 0'' through ''Tier 8'', tiers apply only for NO_X standards. Tiers do not apply for HC, CO, and smoke standards because these continue to apply, independent of the NO_X standards.
87.23(d)(2)	The allowance to continue production of Tier 6 engines after the Tier 8 standards start to apply is not necessary for engines with rated pressure ratio at or above 104.7 because the Tier 6 and Tier 8 standards are numerically identical at these thrust levels.
87.42(c)(1)	§ 87.42 requires that a manufacturer report the engines it produces by sub-model. The manufacturer must specify the manufacturer's unique sub-model name, which will generally include a model name and a sub-model name. It may also include a family name.
87.50	This provision specifies that EPA must provide written concurrence for exemptions.
87.50(a)(1)(iv)(F)	This provision states that manufacturers requesting exemptions should describe equity issues. As an example of equity issues related to an exemption request, a manufacturer might provide a rationale for granting the exemption when another manufacturer has a compliant engine and does not need an exemption, taking into account the implications for operator fleet composition, commonality, and related issues in the absence of the engine model in question.
87.50(a)(6)	This provision requires manufacturers to promptly notify the FAA if new or changed information could have affected approval of an exemption. For corrections to an exemption request that would not affect the approval of the exemption, manufacturers may include the updated information in the annual report described in § 87.50(e).

VI. Technical Feasibility and Cost Impacts

During the CAEP process, the technical feasibility and cost of compliance of the CAEP/6 and CAEP/8 NO_X standards were thoroughly assessed and documented.[105] [106] EPA participated in these analyses and supported the results. Generally, CAEP considered certain factors as pertinent to the cost estimates of a technology level for engine changes, and these factors or technology levels are

[105] CAEP/6 NO_X standards: CAEP Forecasting and Economic Analysis Support Group, *Economic Analysis of NO_X Emissions Stringency Options,* CAEP/6–IP/13 (Information Paper 13), January 15, 2004. A copy of this document is in docket number EPA–HQ–OAR–2010–0687.

[106] CAEP/8 NO_X standards: CAEP Working Group 3, *NO_X Stringency Technology Response Assessment,* CAEP–SG/20082–WP/18 (Working Paper 18), September 25, 2008. CAEP Forecasting and Economic Analysis Support Group, *Economic Assessment of the NO_X Stringency Scenarios,* CAEP/8–IP/14, November 30, 2009. Modeling Task Force, *MODTF NO_X .Stringency Assessment,* CAEP/8–IP/13, December 11, 2009. United States, *Aviation Environmental Portfolio Management Tool for Economics (APMT-Economics) and Its Application in the CAEP/8 NO_X Stringency Analysis,* CAEP/8–IP/29, January 6, 2010. A copy of these documents are in docket number EPA–HQ–OAR–2010–0687.

described below. The first technology level was regarded as a minor change, and it could include modeling work, minor design changes, and additional testing and re-certification of emissions. The second technology level was considered a scaled proven technology. At this level an engine manufacturer applies its best-proven, combustion technology that was already certified in at least one other engine type to another engine type. This second technology level would include substantial modeling, design, combustion rig testing, modification and testing of development engines, and flight testing. The third technology level was regarded as new technology or current industry best practice, and it was considered where a manufacturer has no proven technology that can be scaled to provide a solution and some technology acquisition activity is required. (One or more manufacturers have demonstrated the necessary technology, while the remaining manufacturers would need to acquire the technology to catch up.) Since the effective date for the CAEP/6 NO_X standard was January 1, 2008 and nearly all in-production engines currently meet this standard, we believe this clearly demonstrates the technical feasibility of those standards. Therefore, we will limit our discussion below to applying these technology levels to engines that need to comply with the CAEP/8 NO_X standard.

At the time of the CAEP reports, the CAEP/8 NO_X standard for higher thrust engines, i.e., 89.0 kN or more would apply to a total of 15 engine types. For these types the following technology level response was anticipated: six types would require no change, one type would need the first technology level change, five would require the second technology level, and three would need the third technology level. For lower thrust engines, i.e., greater that 26.7 but less than 89.0 kN, CAEP listed a total of 13 engine types in their analysis of the CAEP/8 NO_X standard. The following technology level response was estimated for these types: 11 types would require no change, 1 type would need the first technology level change, and 1 type would require a second technology. Based on these analyses, CAEP concluded that the CAEP/8 NO_X standards were technically feasible within the lead time and time frame identified in the action.

Regarding the costs of this final rule, aircraft turbofan engines are designed and built for use on aircraft that are sold and operated throughout the world. As a result, engine manufacturers respond to this market reality by designing and building engines that conform to ICAO international standards and practices. This normal business practice means that engine manufacturers are compelled to make the necessary business decisions and investments to maximize their international markets even in the absence of U.S. regulations that would otherwise codify ICAO standards and practices. Indeed, engine manufacturers have developed or are already developing improved technology in response to ICAO standards that match the standards being promulgated in this final rule. Also, the recommended practices, e.g., test procedures, needed to demonstrate compliance are being adhered to by manufacturers during current engine certification tests, or will be even in the absence this final rule. Therefore, EPA believes that today's standards and practices that conform with ICAO standards and practices will impose no real additional burden on engine manufacturers. This finding regarding no incremental burden, is also consistent with past EPA rulemakings that adopted ICAO requirements. ((See 62 FR 25356 (May 8, 1997) and 70 FR 69664 (November 11, 2005).

In fact, engine manufacturers have suggested that certain benefits accrue for compliant products when the U.S. adopts ICAO standards and practices, but have not provided detailed information regarding these benefits. Primarily, such action makes FAA certification more straightforward and transparent. That in turn is advantageous when marketing their products to potential customers, because compliance with ICAO standards is an important consideration in purchasing decisions. It simply removes any question that their engines comply with international requirements. There will be some cost, however, associated with our annual reporting requirement for emission related information. (See section III.D for a description of the reports.) There are a total of 10 engine manufacturers that would be affected. Eight of these produce turbofan engines with rated thrusts greater than 26.7 kN, which are already voluntarily reported to the ICAO-related Emissions Databank (EDB).[107] We expect the incremental reporting burden for these manufacturers to be very small because we: (1) Have significantly reduced the number of reporting elements from those requested in the EDB, and (2) are adding only three basic reporting categories to those already requested by the EDB. Also, four of the eight manufacturers make smaller turbofan and turboprop engines that will be reporting for the first time. This will add a small incremental burden for these four manufacturers that otherwise already voluntarily report to the EDB. There are also two engine manufacturers that only produce turbofan engines with rated thrusts less than or equal to 26.7 kN and they will be reporting for the first time. For these two manufacturers we believe that the reporting burden will be small because all of the information we are requiring should be readily available, and these manufacturers have a very limited number of engine models.

We have estimated the annual burden and cost to be about six hours and $365 per manufacturer. With 10 manufacturers submitting reports, the total burden of this reporting requirement is estimated to be 60 hours, for a total cost of $3,646.

VII. Consultation With FAA

The requirements contained in this action were developed in consultation with the Federal Aviation Administration (FAA). Section 231(a)(2)(B)(i) of the CAA requires EPA to ''consult with the Administrator of the [FAA] on aircraft engine emission standards'' 42 U.S.C. 7571(a)(2)(B)(i), and section 231(a)(2)(B)(ii) indicates that EPA ''shall not change the aircraft engine emission standards if such change would significantly increase noise. * * *'' 42 U.S.C. 7571(a)(2)(B)(ii). Section 231(b) of the CAA states that ''[a]ny regulation prescribed under this section (and any revision thereof) shall take effect after such period as the Administrator finds necessary (after consultation with the Secretary of Transportation) to permit the development and application of the requisite technology, giving appropriate consideration to the cost of compliance within such period.'' 42 U.S.C. 7571(b). Section 231(c) provides that any regulation under section 231 ''shall not apply if disapproved by the President * * * on the basis of a finding by the Secretary of Transportation that any such regulation would create a hazard to aircraft safety.'' 42 U.S.C. 7571(c). Under section 232 of the CAA, the Department of Transportation (DOT) has the responsibility to enforce the aircraft emission standards established by EPA

[107] As discussed in section III.D, we are requiring a single report that integrates the new reporting requirement contained in this final rule with the existing mandatory greenhouse gas (GHG) reporting of NO_X and CO_2 as already required under § 87.64. Combining the existing GHG report with the new reporting requirement will not increase an engine manufacturer's reporting burden. A single, integrated report may actually reduce a manufacturer's total reporting burden somewhat because of the efficiency inherent in reporting to EPA once instead of twice.

under section 231.[108] As in past rulemakings and pursuant to the above referenced sections of the CAA, EPA has coordinated with the FAA, i.e., DOT, with respect to today's action.

Moreover, FAA is the official U.S. delegate to ICAO. FAA agreed to the amendments at ICAO's Sixth and Eighth Meetings of the Committee on Aviation Environmental Protection (CAEP/6) after advisement from EPA.[109] FAA and EPA were both members of the CAEP's Working Group 3 (among others), whose objective was to evaluate emissions technical issues and develop recommendations on such issues for CAEP/6 and CAEP/8. After assessing emissions test procedure amendments and new NO_X standards, Working Group 3 made recommendations to CAEP on these elements. These recommendations were approved by CAEP/6 meetings prior to their adoption by ICAO in 2004. Similarly, the more recent Working Group 3 recommendations were approved by CAEP/8 and have been adopted ICAO.

In addition, as discussed above, FAA will have the duty to enforce today's requirements. As a part of these duties, the FAA witnesses the emission tests or delegates aspects of that responsibility to the engine manufacturer, which is then monitored by the FAA.

VIII. Public Participation

We proposed this regulation on July 27, 2011 (76 FR 45012). A public hearing was held on August 11, 2011 in Chicago, IL. The public was invited to submit written comments on the proposal during the formal comment period, which ended on September 26, 2011. We received eight public comments from aircraft and aircraft engine manufacturers, airline operators and an individual.

The vast majority of commenters supported the central tenets of the proposed regulations. That is, there was broad support for the adoption of these standards and the alignment of U.S. and international emissions regulations. We received specific comments on several aspects of the proposal.

Throughout this notice, we discussed the key issues arising from the public comment and our responses. In addition, we have addressed all of the public comments in the analysis of comments document associated with this final action and located in the docket (Docket ID EPA–HQ–OAR–2010–0687).

IX. Statutory Provisions and Legal Authority

The statutory authority for today's proposal is provided by sections 114, 231–234 and 301(a) of the Clean Air Act, as amended, 42 U.S.C. §§ 7414, 7571–7574 and 7601(a). See section II of today's rule for discussion of how EPA meets the CAA's statutory requirements.

X. Statutory and Executive Order Reviews

A. Executive Order 12866: Regulatory Planning and Review, and Executive Order 13563: Improving Regulation and Regulatory Review

Under Executive Order (EO) 12866 (58 FR 51735, October 4, 1993), this action is a ''significant regulatory action.'' This action promulgates new aircraft engine emissions regulations and as such, requires consultation and coordination with the Federal Aviation Administration (FAA). OMB has determined that this action raises ''* * * novel legal or policy issues arising out of legal mandates, the President's priorities, or the principles set forth in the EO.'' Accordingly, EPA submitted this action to the Office of Management and Budget (OMB) for review under EO 12866 and 13563 (76 FR 3821, January 21, 2011) and any changes made in response to OMB recommendations have been documented in the docket for this action.

As discussed further in section V, we do not attribute any costs to the compliance with today's regulations that conform to ICAO standards and recommended practices. Aircraft turbofan engines are international commodities. As a result, engine manufacturers respond to this market reality by designing and building engines that conform to ICAO international standards and practices. Therefore, engine manufacturers are compelled to make the necessary business decisions and investments to maximize their international markets even in the absence of U.S. action. Indeed, engine manufacturers have or are already responding, or will in the future, to ICAO requirements that match the standards and practices adopted here. Therefore, EPA believes that today's requirements that conform with ICAO standards and practices will impose no real additional burden on engine manufacturers. This finding is also consistent with past EPA rulemakings that adopted ICAO requirements.

There is, nonetheless, a small burden associated with the reporting requirements, as discussed in section IX.B.

B. Paperwork Reduction Act

The information collection requirements in this rule have been submitted for approval to the Office of Management and Budget (OMB) under the Paperwork Reduction Act, 44 U.S.C. 3501 et seq. The information collection requirements are not enforceable until OMB approves them.

Manufacturers keep substantial records to document their compliance with emission standards. We need to be able to access this data to conduct accurate emission inventories, understand how emission standards affect the current fleet, and develop appropriate policy in the form of future emission standards. Most manufacturers are already accustomed to reporting much of this information to ICAO. However, these reports are voluntary and aperiodic. As part of this action, we are requiring that engine manufacturers send this information to EPA on an annual basis. We are also requiring manufacturers to send us their annual production volumes, which we would treat as confidential business information. Under the Clean Air Act, we are authorized to require manufacturers to establish and maintain necessary records, make reports, and provide such other information as we may reasonably require to execute our functions under the Act. See 42 U.S.C. 7414(a)(1). We will simply require manufacturers to add the required information items to the annual report they are already required to submit with information about NO_X and CO_2 emission levels. See section III.D for a more complete description of the annual reporting requirement.

We have estimated the total annual burden of the reporting requirement to be 60 hours, and the total cost to be $3,646. The annual burden and cost per respondent is estimated to be 6 hours and $365. Burden is defined at 5 CFR 1320.3(b).

An agency may not conduct or sponsor, and a person is not required to respond to, a collection of information unless it displays a currently valid OMB control number. The OMB control numbers for EPA's regulations in 40 CFR are listed in 40 CFR part 9. When this ICR is approved by OMB, the Agency will publish a technical amendment to 40 CFR part 9 in the **Federal Register** to display the OMB control number for the approved

[108] The functions of the Secretary of Transportation under part B of title II of the Clean Air Act (§§ 231–234, 42 U.S.C. 7571–7574) have been delegated to the Administrator of the FAA. 49 CFR 1.47(g).

[109] The Sixth Meeting of CAEP (CAEP/6) occurred in Montreal, Quebec from February 2 through 12 in 2004.

information collection requirements contained in this final rule.

C. Regulatory Flexibility Analysis

The Regulatory Flexibility Act (RFA) generally requires an agency to prepare a regulatory flexibility analysis of any rule subject to notice and comment rulemaking requirements under the Administrative Procedure Act or any other statute unless the agency certifies that the rule will not have a significant economic impact on a substantial number of small entities. Small entities include small businesses, small organizations, and small governmental jurisdictions.

For purposes of assessing the impacts of today's rule on small entities, small entity is defined as: (1) A small business as defined by SBA size standards; (2) a small governmental jurisdiction that is a government of a city, county, town, school district or special district with a population of less than 50,000; and (3) a small organization that is any not-for-profit enterprise which is independently owned and operated and is not dominant in its field. The following Table 4 provides an overview of the primary SBA small business categories potentially affected by this regulation.

TABLE 4—PRIMARY POTENTIALLY AFFECTED SBA SMALL BUSINESS CATEGORIES

Industry	NAICS [a] Codes	Defined by SBA as a small business if: [b]
Manufacturers of new aircraft engines	336412	<1,000 employees.
Manufacturers of new aircraft	336411	<1,500 employees.

[a] North American Industry Classification System (NAICS).
[b] According to SBA's regulations (13 CFR part 121), businesses with no more than the listed number of employees or dollars in annual receipts are considered "small entities" for purposes of a regulatory flexibility analysis.

After considering the economic impacts of today's rule on small entities, I certify that this action will not have a significant economic impact on a substantial number of small entities. Small governmental jurisdictions and small organizations as described above will not be impacted. We have determined that the estimated effect of the rule's reporting requirement is to affect one small entity turbofan engine manufacturer with costs less than one percent of revenues. This one company represents all of the small businesses affected by the regulations. An analysis of the impacts of the proposed rule on small businesses has been prepared and placed in the docket for this rulemaking.[110] Since this final rule is largely unchanged from the proposal, that analysis remains valid for the final rule.

D. Unfunded Mandates Reform Act

This rule does not contain a Federal mandate that may result in expenditures of $100 million or more for State, local, and tribal governments, in the aggregate, or the private sector in any one year. As discussed in section III, today's action will establish consistency between U.S. and existing international emission standards. The engine manufacturers are already developing the technology to meet the existing ICAO standards, and we do not believe it is appropriate to attribute the costs of that technology to this action. Thus, this rule is not subject to the requirements of sections 202 or 205 of UMRA.

This rule is also not subject to the requirements of section 203 of UMRA because it contains no regulatory requirements that might significantly or uniquely affect small governments. The provisions of this rule apply to the manufacturers of aircraft and aircraft engines, and as such would not affect small governments.

E. Executive Order 13132: Federalism

This action does not have federalism implications. It will not have substantial direct effects on the States, on the relationship between the national government and the States, or on the distribution of power and responsibilities among the various levels of government, as specified in Executive Order 13132. As discussed earlier, section 233 of the CAA preempts states from adopting or enforcing aircraft engine emission standards that are not identical to our standards. This rule revises the Code of Federal Regulations to more accurately reflect the statutory preemption established by the Clean Air Act. This rule does not impose any new preemption of State and local law. Thus, Executive Order 13132 does not apply to this action.

F. Executive Order 13175: Consultation and Coordination With Indian Tribal Governments

These rules regulate aircraft manufacturers and aircraft engine manufacturers. We do not believe that Tribes own any of these businesses nor are there other implications for Tribes. Thus, Executive Order 13175 does not apply to this action.

G. Executive Order 13045: Protection of Children From Environmental Health and Safety Risks

This rule is not subject to Executive Order 13045 (62 FR 19885, April 23, 1997) because it is not economically significant as defined in EO 12866 and the Agency does not believe the environmental health risks or safety risks addressed by this action present a disproportionate risk to children. See section II.B.2 for a discussion of the health impacts of NO_X emissions.

H. Executive Order 13211: Actions That Significantly Affect Energy Supply, Distribution, or Use

This action is not a "significant energy action" as defined in Executive Order 13211 (66 FR 28355 (May 22, 2001)), because it is not likely to have a significant adverse effect on the supply, distribution, or use of energy. These aircraft engine emissions regulations are not expected to result in any changes to aircraft fuel consumption.

I. National Technology Transfer Advancement Act

Section 12(d) of the National Technology Transfer and Advancement Act of 1995 ("NTTAA"), Public Law 104–113 (15 U.S.C. 272 note) directs EPA to use voluntary consensus standards in its regulatory activities unless to do so would be inconsistent with applicable law or otherwise impractical. Voluntary consensus standards are technical standards (e.g., materials specifications, test methods, sampling procedures, and business practices) that are developed or adopted by voluntary consensus standards bodies. NTTAA directs EPA to provide

[110] "Small Business Impact Memo, Proposed Aircraft Engine Emission Standards—Determination of No SISNOSE," EPA memo from Solveig Irvine to Alexander Cristofaro, November, 2010.

Congress, through OMB, explanations when the Agency decides not to use available and applicable voluntary consensus standards.

This rulemaking involves technical standards for testing emissions for aircraft gas turbine engines. EPA is using test procedures contained in ICAO's International Standards and Recommended Practices Environmental Protection, Annex 16, Volume II along with the modifications contained in this rulemaking.[111] These procedures are currently used by all manufacturers of aircraft gas turbine engines (with thrust greater than 26.7 kN) to demonstrate compliance with ICAO emissions standards.

J. Executive Order 12898: Federal Actions To Address Environmental Justice in Minority Populations and Low-Income Populations

Executive Order (EO) 12898 (59 FR 7629 (Feb. 16, 1994)) establishes federal executive policy on environmental justice. Its main provision directs federal agencies, to the greatest extent practicable and permitted by law, to make environmental justice part of their mission by identifying and addressing, as appropriate, disproportionately high and adverse human health or environmental effects of their programs, policies, and activities on minority populations and low-income populations in the United States.

EPA has determined that this rule will not have disproportionately high and adverse human health or environmental effects on minority or low-income populations because it increases the level of environmental protection for all affected populations without having any disproportionately high and adverse human health or environmental effects on any population, including any minority or low-income population.

K. Congressional Review Act

The Congressional Review Act, 5 U.S.C. 801 et seq., as added by the Small Business Regulatory Enforcement Fairness Act of 1996, generally provides that before a rule may take effect, the agency promulgating the rule must submit a rule report, which includes a copy of the rule, to each House of the Congress and to the Comptroller General of the United States. EPA will submit a report containing this rule and other required information to the U.S. Senate, the U.S. House of Representatives, and the Comptroller General of the United States prior to publication of the rule in the **Federal Register**. A major rule cannot take effect until 60 days after it is published in the Federal Register. This action is not a ''major rule'' as defined by 5 U.S.C. 804(2). This rule will be effective July 18, 2012.

L. Executive Order 13609: Promoting International Regulatory Cooperation

Executive Order (EO) 13609 (77 FR 26413, May 4, 2012) promotes international regulatory cooperation in order to identify approaches that are at least as protective as those that are or would be adopted in the absence of such cooperation in meeting shared challenges involving health, safety, labor, security, environmental, and other issues. International regulatory cooperation can also reduce, eliminate, or prevent unnecessary differences in regulatory requirements.

These final standards are identical to the international standards developed through EPA's active participation in the United Nation's International Civil Aviation Organization (ICAO) activities. EPA has historically been a principal participant in the development of U.S. policy in various ICAO working groups and other international venues, assisting and advising the Federal Aviation Administration on aviation emissions, technology, and policy matters. These provisions provide a means by which the United States can meet its obligations under the Chicago Convention and ensure that engine manufacturers maintain worldwide acceptability of their products.

List of Subjects

40 CFR Part 87

Environmental protection, Air pollution control, Aircraft, Incorporation by reference.

40 CFR Part 1068

Environmental protection, Administrative practice and procedure, Confidential business information, Imports, Motor vehicle pollution, Penalties, Reporting and recordkeeping requirements, Warranties.

Dated: June 1, 2012.

Lisa P. Jackson,

Administrator.

For the reasons described in the preamble, title 40, chapter I, of the Code of Federal Regulations is amended as set forth below.

PART 87—CONTROL OF AIR POLLUTION FROM AIRCRAFT AND AIRCRAFT ENGINES

■ 1. The authority citation for part 87 is revised to read as follows:

Authority: 42 U.S.C. 7401 *et seq.*

Subpart A—[Amended]

■ 2. Revise § 87.1 to read as follows:

§ 87.1 Definitions.

The definitions in this section apply to this part. The definitions apply to all subparts. Any terms not defined in this section have the meaning given in the Clean Air Act. The definitions follow:

Act means the Clean Air Act, as amended (42 U.S.C. 7401 *et seq*).

Administrator means the Administrator of the Environmental Protection Agency and any other officer or employee of the Environmental Protection Agency to whom authority involved may be delegated.

Aircraft has the meaning given in 14 CFR 1.1, which defines aircraft to mean a device used or intended to be used for flight in the air. Note that under § 87.3, the requirements of this part generally apply only to propulsion engines used on certain airplanes for which U.S. airworthiness certificates are required.

Aircraft engine means a propulsion engine which is installed in or which is manufactured for installation in an aircraft.

Aircraft gas turbine engine means a turboprop, turbofan, or turbojet aircraft engine.

Characteristic level has the meaning given in Appendix 6 of ICAO Annex 16 (as of July 2008). The characteristic level is a calculated emission level for each pollutant based on a statistical assessment of measured emissions from multiple tests.

Class TP means all aircraft turboprop engines.

Class TF means all turbofan or turbojet aircraft engines or aircraft engines designed for applications that otherwise would have been fulfilled by turbojet and turbofan engines except engines of class T3, T8, and TSS.

Class T3 means all aircraft gas turbine engines of the JT3D model family.

Class T8 means all aircraft gas turbine engines of the JT8D model family.

Class TSS means all aircraft gas turbine engines employed for propulsion of aircraft designed to operate at supersonic flight speeds.

Commercial aircraft engine means any aircraft engine used or intended for use by an ''air carrier,'' (including those engaged in ''intrastate air transportation'') or a ''commercial

[111] ICAO International Standards and Recommended Practices Environmental Protection, Annex 16, Volume II, ''Aircraft Engine Emissions,'' Second Edition, July 1993—Amendment 3, March 20, 1997. Copies of this document can be obtained from ICAO (*www.icao.int*).

operator'' (including those engaged in ''intrastate air transportation'') as these terms are defined in subtitle 7 of title 49 of the United States Code and title 14 of the Code of Federal Regulations.

Commercial aircraft gas turbine engine means a turboprop, turbofan, or turbojet commercial aircraft engine.

Date of introduction or *introduction date* means the date of manufacture of the first individual production engine of a given engine model or engine type certificate family to be certificated. This does not include test engines or other engines not placed into service.

Date of manufacture means the date on which a manufacturer is issued documentation by FAA (or other competent authority for engines certificated outside the United States) attesting that the given engine conforms to all applicable requirements. This date may not be earlier that the date on which assembly of the engine is complete. Where the manufacturer does not obtain such documentation from FAA (or other competent authority for engines certificated outside the United States), *date of manufacture* means the date of final assembly of the engine.

Derivative engine for emissions certification purposes means an engine that has the same or similar emissions characteristics as an engine covered by a U.S. type certificate issued under 14 CFR part 33. These characteristics are specified in § 87.48.

Designated EPA Program Officer means the Director of the Assessment and Standards Division, 2000 Traverwood Drive, Ann Arbor, Michigan 48105.

DOT Secretary means the Secretary of the Transportation and any other officer or employee of the Department of Transportation to whom the authority involved may be delegated.

Engine means an individual engine. A group of identical engines together make up an engine model or sub-model.

Engine model means an engine manufacturer's designation for an engine grouping of engines and/or engine sub-models within a single engine type certificate family, where such engines have similar design, including being similar with respect to the core engine and combustor designs.

Engine sub-model means a designation for a grouping of engines with essentially identical design, especially with respect to the core engine and combustor designs and other emission-related features. Engines from an engine sub-model must be contained within a single engine model. For purposes of this part, an original engine model configuration is considered a sub-model. For example, if a manufacturer initially produces an engine model designated ABC and later introduces a new sub-model ABC–1, the engine model consists of two sub-models: ABC and ABC–1.

Engine type certificate family means a group of engines (comprising one or more engine models, including sub-models and derivative engines for emissions certification purposes of those engine models) determined by FAA to have a sufficiently common design to be grouped together under a type certificate.

EPA means the U.S. Environmental Protection Agency.

Except means to routinely allow engines to be produced and sold that do not meet (or do not fully meet) otherwise applicable standards. (Note that this definition applies only with respect to spare engines and that the term ''except'' has its plain meaning in other contexts.) Excepted engines must conform to regulatory conditions specified for an exception in this part and other applicable regulations. Excepted engines are deemed to be ''subject to'' the standards of this part even though they are not required to comply with the otherwise applicable requirements. Engines excepted with respect to certain standards must comply with other standards from which they are not excepted.

Exempt means to allow (through a formal case-by-case process) engines to be produced and sold that do not meet (or do not fully meet) otherwise applicable standards. Exempted engines must conform to regulatory conditions specified for an exemption in this part and other applicable regulations. Exempted engines are deemed to be ''subject to'' the standards of this part even though they are not required to comply with the otherwise applicable requirements. Engines exempted with respect to certain standards must comply with other standards as a condition of the exemption.

Exhaust emissions means substances emitted to the atmosphere from exhaust discharge nozzles, as measured by the test procedures specified in subpart G of this part.

FAA means the U.S. Department of Transportation, Federal Aviation Administration.

Fuel venting emissions means raw fuel, exclusive of hydrocarbons in the exhaust emissions, discharged from aircraft gas turbine engines during all normal ground and flight operations.

Good engineering judgment involves making decisions consistent with generally accepted scientific and engineering principles and all relevant information, subject to the provisions of 40 CFR 1068.5.

ICAO Annex 16 means Volume II of Annex 16 to the Convention on International Civil Aviation (incorporated by reference in § 87.8).

In-use aircraft gas turbine engine means an aircraft gas turbine engine which is in service.

Military aircraft means aircraft owned by, operated by, or produced for sale to the armed forces or other agency of the federal government responsible for national security (including but not limited to the Department of Defense) and other aircraft considered to be military aircraft under international law and conventions.

New means relating to an aircraft or aircraft engine that has never been placed into service.

Operator means any person or company that owns or operates an aircraft.

Production cutoff date or *date of the production cutoff* means the date on which interim phase-out allowances end.

Rated output (rO) means the maximum power/thrust available for takeoff at standard day conditions as approved for the engine by FAA, including reheat contribution where applicable, but excluding any contribution due to water injection, expressed in kilowatts or kilonewtons (as applicable) and rounded to at least three significant figures.

Rated pressure ratio (rPR) means the ratio between the combustor inlet pressure and the engine inlet pressure achieved by an engine operating at rated output, rounded to at least three significant figures.

Round has the meaning given in 40 CFR 1065.1001.

Smoke means the matter in exhaust emissions that obscures the transmission of light, as measured by the test procedures specified in subpart G of this part.

Smoke number means a dimensionless value quantifying smoke emissions calculated in accordance with ICAO Annex 16.

Spare engine means an engine installed (or intended to be installed) on an in-service aircraft to replace an existing engine and that is excepted as described in § 87.50(c).

Standard day conditions means the following ambient conditions: temperature = 15 °C, specific humidity = 0.00634 kg H_2O/kg dry air, and pressure = 101.325 kPa.

Subsonic means relating to aircraft that are not supersonic aircraft.

Supersonic means relating to aircraft that are certificated to fly faster than the speed of sound.

Tier 0 means relating to an engine that is subject to the Tier 0 NO_X standards specified in § 87.21.

Tier 2 means relating to an engine that is subject to the Tier 2 NO_X standards specified in § 87.21.

Tier 4 means relating to an engine that is subject to the Tier 4 NO_X standards specified in § 87.21.

Tier 6 means relating to an engine that is subject to the Tier 6 NO_X standards specified in § 87.23.

Tier 8 means relating to an engine that is subject to the Tier 8 NO_X standards specified in § 87.23.

Turbofan engine means a gas turbine engine designed to create its propulsion from exhaust gases and from air that bypasses the combustion process and is accelerated in a ducted space between the inner (core) engine case and the outer engine fan casing.

Turbojet engine means a gas turbine engine that is designed to create all of its propulsion from exhaust gases.

Turboprop engine means a gas turbine engine that is designed to create most of its propulsion from a propeller driven by a turbine, usually through a gearbox.

Turboshaft engine means a gas turbine engine that is designed to drive a rotor transmission system or a gas turbine engine not used for propulsion.

U.S.-registered aircraft means an aircraft that is on the U.S. Registry.

We (us, our) means the Administrator of the Environmental Protection Agency and any authorized representatives.

■ 3. Revise § 87.2 to read as follows:

§ 87.2 Abbreviations.

The abbreviations used in this part have the following meanings:

% percent
° degree
CO carbon monoxide
CO_2 carbon dioxide
g gram
HC hydrocarbon(s)
kN kilonewton
kW kilowatt
LTO landing and takeoff
NO_X oxides of nitrogen
rO rated output
rPR rated pressure ratio
SN smoke number

■ 4. Revise § 87.3 to read as follows:

§ 87.3 General applicability and requirements.

(a) The regulations of this part apply to engines on all aircraft that are required to be certificated by FAA under 14 CFR part 33 except as specified in this paragraph (a). These regulations do not apply to the following aircraft engines:

(1) Reciprocating engines (including engines used in ultralight aircraft).

(2) Turboshaft engines such as those used in helicopters.

(3) Engines used only in aircraft that are not airplanes. For purposes of this paragraph (a)(3), ''airplane'' means a fixed-wing aircraft that is heavier than air.

(4) Engines not used for propulsion.

(b) Under section 232 of the Act, the Secretary of Transportation issues regulations to ensure compliance with the standards and related requirements of this part (42 U.S.C. 7572).

(c) The Secretary of Transportation shall apply these regulations to aircraft of foreign registry in a manner consistent with obligations assumed by the United States in any treaty, convention or agreement between the United States and any foreign country or foreign countries.

(d) No State or political subdivision of a State may adopt or attempt to enforce any aircraft or aircraft engine standard respecting emissions unless the standard is identical to a standard applicable to such aircraft under this part (including prior-tier standards applicable to exempt engines).

§ 87.5 [Removed]

■ 5. Remove § 87.5.

■ 6. Revise § 87.6 to read as follows:

§ 87.6 Aircraft safety.

The provisions of this part will be revised if at any time the DOT Secretary determines that an emission standard cannot be met within the specified time without creating a hazard to aircraft safety.

§ 87.7 [Removed]

■ 7. Remove § 87.7.

■ 8. Revise § 87.8 to read as follows:

§ 87.8 Incorporation by reference.

(a) Certain material is incorporated by reference into this part with the approval of the Director of the Federal Register under 5 U.S.C. 552(a) and 1 CFR part 51. To enforce any edition other than that specified in this section, the Environmental Protection Agency must publish notice of change in the **Federal Register** and the material must be available to the public. All approved material is available for inspection at U.S. EPA, Air and Radiation Docket and Information Center, 1301 Constitution Ave. NW., Room B102, EPA West Building, Washington, DC 20460, (202) 202–1744, and is available from the sources listed below. It is also available for inspection at the National Archives and Records Administration (NARA). For information on the availability of this material at NARA, call 202–741–6030 or go to *http://www.archives.gov/federal_register/code_of_federal_regulations/ibr_locations.html.*

(b) International Civil Aviation Organization, Document Sales Unit, 999 University Street, Montreal, Quebec, Canada H3C 5H7, (514) 954–8022, *www.icao.int*, or *sales@icao.int.*

(1) Annex 16 to the Convention on International Civil Aviation, Environmental Protection, Volume II—Aircraft Engine Emissions, Third Edition, July 2008 (ICAO Annex 16). IBR approved for §§ 87.1, 87.42(c), and 87.60(a) and (b).

(2) [Reserved]

Subpart C—[Amended]

■ 9. Amend § 87.21 as follows:
■ a. By revising the section heading.
■ b. By adding introductory text.
■ c. By revising paragraphs (d)(1)(iii), (d)(1)(iv), (d)(1)(vi) introductory text, (e)(1), and (f).

§ 87.21 Exhaust emission standards for Tier 4 and earlier engines.

This section describes the emission standards that apply for Tier 4 and earlier engines that apply for aircraft engines manufactured before July 18, 2012 and certain engines exempted under § 87.50. Note that the tier of standards identified for an engine relates to NO_X emissions and that the specified standards for HC, CO, and smoke emissions apply independent of the changes to the NO_X emission standards.

(d) * * *

(1) * * *

(iii) The following Tier 0 emission standard applies for engines of a type or model of which the date of manufacture of the first individual production model was on or before December 31, 1995 and for which the date of manufacture of the individual engine was on or before December 31, 1999.

Oxides of Nitrogen: (40 + 2(rPR)) grams/kilonewton rO.

(iv) The following Tier 2 emission standard applies for engines of a type or model of which the date of manufacture of the first individual production model was after December 31, 1995 or for which the date of manufacture of the individual engine was after December 31, 1999:

Oxides of Nitrogen: (32 + 1.6(rPR)) grams/kilonewton rO.

* * * * *

(vi) The following Tier 4 emission standards apply for engines of a type or model of which the date of manufacture of the first individual production model was after December 31, 2003:

* * * * *

(e) * * *

(1) Class TF of rated output less than 26.7 kilonewtons manufactured on or after August 9, 1985:

$SN = 83.6(rO)^{-0.274}$ (rO is in kilonewtons) not to exceed a maximum of SN = 50.

* * * * *

(f) The standards in this section refer to a composite emission sample measured and calculated in accordance with the procedures described in subpart G of this part.

■ 10. Add a new § 87.23 to subpart C to read as follows:

§ 87.23 Exhaust emission standards for Tier 6 and Tier 8 engines.

This section describes the emission standards that apply for Tier 6 and Tier 8 engines. The standards of this section apply for aircraft engines manufactured on or after July 18, 2012, except where we specify that they apply differently by year, or where the engine is exempt from one or more standards of this section. Except as specified in paragraph (d) of this section, these standards apply based on the date the engine is manufactured. Where a gaseous emission standard is specified by a formula, calculate and round the standard to three significant figures or to the nearest 0.1 g/kN (for standards at or above 100 g/kN). Where a smoke standard is specified by a formula, calculate and round the standard to the nearest 0.1 SN. Engines comply with an applicable standard if the testing results show that the engine type certificate family's characteristic level does not exceed the numerical level of that standard, as described in § 87.60. The tier of standards identified for an engine relates to NO_X emissions and that the specified standards for HC, CO, and smoke emissions apply independent of the changes to the NO_X emission standards.

(a) New turboprop aircraft engines with rated output at or above 1,000 kilowatts must comply with a smoke standard of $187 \cdot rO^{-0.168}$.

(b) New supersonic engines must comply with the standards shown in the following table:

TABLE 1 TO § 87.23—SMOKE AND GASEOUS EMISSION STANDARDS FOR NEW SUPERSONIC ENGINES

Rated output	Smoke number	HC (g/kN rated output)	NO_X (g/kN rated output)	CO (g/kN rated output)
rO < 26.7 kN		$140 \cdot 0.92^{rPR}$	$36 + 2.42 \cdot rPR$	$4550 \cdot rPR^{-1.03}$
rO ≥ 26.7 kN	$83.6 \cdot rO^{-0.274}$ or 50.0, whichever is smaller	$140 \cdot 0.92^{rPR}$	$36+2.42 \cdot rPR$	$4550 \cdot rPR^{-1.03}$

(c) New turbofan or turbojet aircraft engines that are installed in subsonic aircraft must comply with the following standards:

(1) The applicable smoke, HC, and CO standards are shown in the following table:

TABLE 2 TO § 87.23—SMOKE, HC, AND CO STANDARDS FOR NEW SUBSONIC TURBOFAN OR TURBOJET ENGINES

Rated output (kN)	Smoke standard	Gaseous emission standards (g/kN rated output)	
		HC	CO
rO < 26.7 kN	$83.6 \cdot rO^{-0.274}$ or 50.0, whichever is smaller		
rO ≥ 26.7 kN	$83.6 \cdot rO^{-0.274}$ or 50.0, whichever is smaller	19.6	118

(2) The Tier 6 NO_X standards apply as described in this paragraph (c)(2). See paragraph (d) of this section for provisions related to models introduced before these standards started to apply and engines determined to be derivative engines for emissions certification purposes under the requirements of this part.

TABLE 3 TO § 87.23—TIER 6 NO_X STANDARDS FOR NEW SUBSONIC TURBOFAN OR TURBOJET ENGINES WITH RATED OUTPUT ABOVE 26.7 KN

If the rated pressure ratio is . . .	and the rated output (in kN) is . . .	The NO_X emission standard (in g/kN rated output) is . . .
rPR ≤ 30	26.7 < rO ≤ 89	$38.5486 + 1.6823 \cdot PR - 0.2453 \cdot rO - 0.00308 \cdot rPR \cdot rO$
	rO > 89	$16.72 + 1.4080 \cdot rPR$
30 < rPR < 82.6	26.7 < rO ≤ 89	$46.1600 + 1.4286 \cdot rPR - 0.5303 \cdot rO + 0.00642 \cdot rPR \cdot rO$
	rO > 89	$-1.04 + 2.0 \cdot rPR$
rPR ≥ 82.6	all	$32 + 1.6 \cdot rPR$

(3) The Tier 8 NO_X standards apply as described in this paragraph (c)(3) beginning January 1, 2014. See paragraph (d) of this section for provisions related to models introduced before January 1, 2014 apply and engines determined to be derivative engines for emissions certification purposes under the requirements of this part.

TABLE 4 TO § 87.23—TIER 8 NO_X STANDARDS FOR NEW SUBSONIC TURBOFAN OR TURBOJET ENGINES WITH RATED OUTPUT ABOVE 26.7 kN

If the rated pressure ratio is . . .	and the rated output (in kN) is . . .	The NO_X emission standard (in g/kN rated output) is . . .
rPR ≤ 30	26.7 < rO ≤ 89	40.052 + 1.5681 · rPR − 0.3615 · rO − 0.0018 · rPR · rO
	rO > 89	7.88 + 1.4080 · rPR
30 < rPR < 104.7	26.7 < rO ≤ 89	41.9435 + 1.505 rPR − 0.5823 · rO + 0.005562 − rPR · rO
	rO > 89	−9.88 + 2.0 · rPR
rPR ≥ 104.7	all	32 + 1.6 · rPR

(d) This paragraph (d) specifies phase-in provisions that allow continued production of certain engines after the Tier 6 and Tier 8 standards begin to apply.

(1) Engine type certificate families certificated with characteristic levels at or below the Tier 4 NO_X standards of § 87.21 (as applicable based on rated output and rated pressure ratio) and introduced before July 18, 2012 may be produced through December 31, 2012 without meeting the Tier 6 NO_X standards of paragraph (c)(2) of this section. This also applies for engines that are covered by the same type certificate and are determined to be derivative engines for emissions certification purposes under the requirements of this part. Note that after this production cutoff date for the Tier 6 NO_X standards, such engines may be produced only if they are covered by an exemption under § 87.50. This production cutoff does not apply to engines installed (or delivered for installation) on military aircraft.

(2) Engine type certificate families certificated with characteristic levels at or below the Tier 6 NO_X standards of paragraph (c)(2) of this section with an introduction date before January 1, 2014 may continue to be produced. This also applies for engines that are covered by the same type certificate and are determined to be derivative engines for emissions certification purposes under the requirements of this part.

(3) An engine manufacturer may produce up to six newly manufactured Tier 4 engines on or after July 18, 2012, subject to the provisions of this paragraph (d)(3). Tier 4 engines meeting the criteria of this paragraph (d)(3) are excepted without request from the otherwise applicable Tier 6 NO_X emission standard. To be eligible for this exception the engines must have a date of manufacture prior to August 31, 2013 and be fully compliant with all requirements applicable to Tier 4 engines. The manufacturer must include these engines in the report required by § 87.50. This exception is void for any manufacturer that produces more than six excepted engines under this paragraph.

■ 11. Add a new subpart E containing §§ 87.40, 87.42, 87.46, and 87.48 to read as follows:

Subpart E—Certification Provisions

Sec.
87.40 General certification requirement.
87.42 Production report to EPA.
87.46 Recordkeeping.
87.48 Derivative engines for emissions certification purposes.

Subpart E—Certification Provisions

§ 87.40 General certification requirement.

Manufacturers of engines subject to this part must meet the requirements of title 14 of the Code of Federal Regulations as applicable.

§ 87.42 Production report to EPA.

Engine manufacturers must submit an annual production report as specified in this section. This requirement applies for engines produced on or after January 1, 2013.

(a) You must submit the report for each calendar year in which you produce any engines subject to emission standards under this part. The report is due by February 28 of the following calendar year. Note that § 87.64 requires you to report CO_2 emission rates to EPA in addition to NO_X. Include these data in the report required by this section. If you produce exempted or excepted engines, you may submit a single report with information on exempted/excepted and normally certificated engines.

(b) Send the report to the Designated EPA Program Officer.

(c) In the report, specify your corporate name and the year for which you are reporting. Include information as described in this section for each engine sub-model subject to emission standards under this part. List each engine sub-model produced or certificated during the calendar year, including the following information for each sub-model:

(1) The type of engine (turbofan, turboprop, etc.) and complete sub-model name, including any applicable model name, sub-model identifier, and engine type certificate family identifier.

(2) The certificate under which it was produced. Identify all the following:

(i) The type certificate number. Specify if the sub-model also has a type certificate issued by a certificating authority other than FAA.

(ii) Your corporate name as listed in the certificate.

(iii) Emission standards to which the engine is certificated.

(iv) Date of issue of type certificate (month and year).

(v) Whether or not this is a derivative engine for emissions certification purposes. If so, identify the original certificated engine model.

(vi) The engine sub-model that received the original type certificate for an engine type certificate family.

(3) Identify the combustor of the sub-model, where more than one type of combustor is available.

(4) The calendar-year production volume of engines from the sub-model that are covered by an FAA type certificate. Record zero for sub-models with no engines produced during the calendar year, or state that the engine model is no longer in production and list the date of manufacture (month and year) of the last engine produced. Specify the number of these engines that are intended for use on new aircraft and the number that are intended for use as non-exempt engines on in-use aircraft. For engines delivered without a final sub-model status and for which the manufacturer has not ascertained the engine's sub-model when installed before submitting its production report, the manufacturer may do any of the following in its initial report, and amend it later:

(i) List the sub-model that was shipped or the most probable sub-model.

(ii) List all potential sub-models.

(iii) State ''Unknown Sub-Model.''

(5) The number of engines tested and the number of test runs for the applicable type certificate.

(6) The applicable test data and related information specified in Part III, Section 2.4 of ICAO Annex 16 (incorporated by reference in § 87.8), except as otherwise allowed by this paragraph. For purposes of this paragraph (c)(6), applicable test data means data required to certify the engine sub-model, which would typically include NO_X, HC, CO and smoke number. However, applicable test data would not include NO_X, HC, or CO emissions for engines subject to only smoke standards. Note that § 87.64 also requires you to report CO_2 emissions. Specify thrust in kW for turboprop engines. You may omit the following items specified in Part III, Section 2.4 of ICAO Annex 16:

(i) Fuel specifications including fuel specification reference and hydrogen/carbon ratio.

(ii) Methods used for data acquisition, correcting for ambient conditions, and data analysis.

(iii) Intermediate emission indices and rates, however you may not omit the final characteristic level for each regulated pollutant in units of g/kN or g/kW.

(d) Clearly show what information you consider confidential by marking, circling, bracketing, stamping, or some other method. We will store your confidential information as described in 40 CFR part 2. Also, we will disclose it only as specified in 40 CFR part 2. If you send us information without claiming it is confidential, we may make it available to the public without further notice to you, as described in 40 CFR 2.204.

(e) Include the following signed statement and endorsement by an authorized representative of your company: ''We submit this report under 40 CFR 87.42. All the information in this report is true and accurate to the best of my knowledge.''

(f) Where information provided for the previous year remains valid and complete, you may report your production volumes and state that there are no changes, without resubmitting the other information specified in this section.

§ 87.46 Recordkeeping.

(a) You must keep a copy of any reports or other information you submit to us for at least three years.

(b) Store these records in any format and on any media, as long as you can promptly send us organized, written records in English if we ask for them. You must keep these records readily available. We may review them at any time.

§ 87.48 Derivative engines for emissions certification purposes.

(a) *General.* A type certificate holder may request from the FAA a determination that an engine configuration is considered a derivative engine for emissions certification purposes. This would mean that the engine configuration is determined to be similar in design to a previously certificated engine (the ''original'' engine) for purposes of compliance with exhaust emission standards (gaseous and smoke). In order for the engine configuration to be considered a derivative engine for emission purposes under this part, it must have been derived from an original engine that was certificated to the requirements of 14 CFR part 33, and one of the following conditions must be met:

(1) The FAA determined that a safety issue exists that requires an engine modification.

(2) Emissions from the derivative engines are determined to be similar. In general, this means the emissions must meet the criteria specified in paragraph (b) of this section. FAA may adjust these criteria in unusual circumstances, consistent with good engineering judgment.

(3) All of the regulated emissions from the derivative engine are lower than the original engine.

(b) *Emissions similarity.* (1) The type certificate holder must demonstrate that the proposed derivative engine model's emissions meet the applicable standards and differ from the original model's emission rates only within the following ranges:

(i) ±3.0 g/kN for NO_X.

(ii) ±1.0 g/kN for HC.

(iii) ±5.0 g/kN for CO.

(iv) ±2.0 SN for smoke.

(2) If the characteristic level of the original certificated engine model (or any other sub-models within the emission type certificate family tested for certification) before modification is at or above 95% of the applicable standard for any pollutant, you must measure the proposed derivative engine model's emissions for all pollutants to demonstrate that the derivative engine's resulting characteristic levels will not exceed the applicable emission standards. If the characteristic levels of the originally certificated engine model (and all other sub-models within the emission type certificate family tested for certification) are below 95% of the applicable standard for each pollutant, then, you may use engineering analysis to demonstrate that the derivative engine will not exceed the applicable emission standards, consistent with good engineering judgment. The engineering analysis must address all modifications from the original engine, including those approved for previous derivative engines.

(c) *Continued production allowance.* Where we allow continued production of an engine model after new standards begin to apply, you may also produce engine derivatives if they conform to the specifications of this section.

(d) *Non-derivative engines.* If the FAA determines that an engine model does not meet the requirements for a derivative engine for emissions certification purposes, the type certificate holder is required to demonstrate that the engine complies with the emissions standards applicable to a new engine type.

■ 12. Add a new subpart F containing § 87.50 to read as follows:

Subpart F—Exemptions and Exceptions

§ 87.50 Exemptions and exceptions.

This section specifies provisions related to exempting/excepting engines from some or all of the standards and requirements of this part 87. Exempted/excepted engines must conform to regulatory conditions specified for an exemption in this section and other applicable regulations. Exempted/excepted engines are deemed to be ''subject to'' the standards of this part even though they are not required to comply with the otherwise applicable requirements. Engines exempted/excepted with respect to certain standards must comply with other standards. Exemption requests under paragraph (a) of this section must be approved by the FAA, with the written concurrence of EPA, to be effective. Exemption requests under paragraph (b) of this section must be approved only by the FAA to be effective. Exceptions do not require a case-by-case FAA approval.

(a) *Engines installed in new aircraft.* Type certificate holders may request an exemption to produce a limited number of newly manufactured engines through December 31, 2016, to be installed in new aircraft as specified in this paragraph (a). This exemption is limited to NO_X emissions from engines that are covered by a valid type certificate issued by FAA.

(1) Submit your request for an exemption to the FAA before producing the engines to be exempted, who will provide a copy to the Designated EPA Program Officer. Exemption by an authority outside the United States does not satisfy this requirement. Unless EPA and FAA allow otherwise, all requests must include the following:

(i) Your corporate name and an authorized representative's contact information.

(ii) A description of the engines for which you are requesting the exemption including the type certificate number and date it was issued by the FAA. Include in your description the engine model and sub-model names and the types of aircraft in which the engines are expected to be installed. Specify the number of engines that you would produce under the exemption and the period during which you would produce them.

(iii) Information about the aircraft in which the engines will be installed. Specify the airframe models and expected first purchasers/users of the aircraft. Identify all countries in which you expect the aircraft to be registered. Specify how many aircraft will be registered in the United States and how many will be registered in other countries; you may estimate this if it is not known.

(iv) A justification of why the exemption is appropriate. Justifications must include a description of the environmental impact of granting the exemption. Include other relevant information such as the following:

(A) Technical issues, from an environmental and airworthiness perspective, which may have caused a delay in compliance with a production cutoff.

(B) Economic impacts on the manufacturer, operator(s), and aviation industry at large.

(C) Environmental effects. This should consider the amount of additional air pollutant emissions that will result from the exemption. This could include consideration of items such as:

(*1*) The amount that the engine model exceeds the standard, taking into account any other engine models in the engine type certificate family covered by the same type certificate and their relation to the standard.

(*2*) The amount of the applicable air pollutant that would be emitted by an alternative engine for the same application.

(*3*) The impact of changes to reduce the applicable air pollutant on other environmental factors, including emission rates of other air pollutants, community noise, and fuel consumption.

(*4*) The degree to which the adverse impact would be offset by cleaner engines produced in the same time period (unless we decide to consider earlier engines).

(D) Impact of unforeseen circumstances and hardship due to business circumstances beyond your control (such as an employee strike, supplier disruption, or calamitous events).

(E) Projected future production volumes and plans for producing a compliant version of the engine model in question.

(F) Equity issues in administering the production cutoff among economically competing parties.

(G) List of other certificating authorities from which you have requested (or expect to request) exemptions, and a summary of the request.

(H) Any other relevant factors.

(v) A statement signed by your authorized representative attesting that all information included in the request is accurate.

(2) In consultation with the EPA, the FAA may specify additional conditions for the exemption.

(3) You must submit the annual report specified in paragraph (d) of this section.

(4) The permanent record for each engine exempted under this paragraph (a) must indicate that the engine is an exempted new engine.

(5) Engines exempted under this paragraph (a) must be labeled with the following statement: ''EXEMPT NEW''.

(6) You must notify the FAA if you determine after submitting your request that the information is not accurate, either from an error or from changing circumstances. If you believe the new or changed information could have affected approval of your exemption (including information that could have affected the number of engines we exempt), you must notify the FAA promptly. The FAA will consult with EPA as needed to address any concerns related to this new or corrected information.

(b) *Temporary exemptions based on flights for short durations at infrequent intervals.* The emission standards of this part do not apply to engines which power aircraft operated in the United States for short durations at infrequent intervals. Such operations are limited to:

(1) Flights of an aircraft for the purpose of export to a foreign country, including any flights essential to demonstrate the integrity of an aircraft prior to its flight to a point outside the United States.

(2) Flights to a base where repairs, alterations or maintenance are to be performed, or to a point of storage, and flights for the purpose of returning an aircraft to service.

(3) Official visits by representatives of foreign governments.

(4) Other flights the Secretary determines to be for short durations at infrequent intervals. A request for such a determination shall be made before the flight takes place.

(c) *Spare engines.* Newly manufactured engines meeting the definition of ''spare engine'' are excepted as follows:

(1) This exception allows production of a newly manufactured engine for installation on an in-service aircraft. It does not allow for installation of a spare engine on a new aircraft.

(2) Each spare engine must be identical to a sub-model previously certificated to meet all requirements applicable to Tier 4 engines or later requirements.

(3) Spare engines excepted under this paragraph (c) may be used only where the emissions of the spare engines are certificated to equal to or lower emission standards than those of the engines they are replacing, for all regulated pollutants.

(4) No prior approval is required to produce spare engines. Engine manufacturers must include information about their production of spare engines in the annual report specified in paragraph (d) of this section

(5) The permanent record for each engine excepted under this paragraph (c) must indicate that the engine was produced as an excepted spare engine.

(6) Engines excepted under this paragraph (c) must be labeled with the following statement: ''EXCEPTED SPARE''.

(d) *Annual reports.* If you produce engines with an exemption/exception under this section, you must submit an annual report with respect to such engines.

(1) You must send the Designated EPA Program Officer a report describing your production of exempted/excepted engines for each calendar year in which you produce such engines by February 28 of the following calendar year. You may include this information in the certification report described in § 87.42. Confirm that the information in your initial request is still accurate, or describe any relevant changes.

(2) Provide the information specified in this paragraph (d)(2). For purposes of this paragraph (d), treat spare engine exceptions separate from other new engine exemptions. Include the following for each exemption/exception and each engine model and sub-model:

(i) Engine model and sub-model names.

(ii) Serial number of each engine.

(iii) Use of each engine (for example, spare or new installation).

(iv) Types of aircraft in which the engines were installed (or are intended to be installed for spare engines).

(v) Serial number of the new aircraft in which engines are installed (if known), or the name of the air carriers (or other operators) using spare engines.

(3) Include information in the report only for engines having a date of manufacture within the specific calendar year.

Subpart G—Test Procedures

■ 13. The heading for subpart G is revised as set forth above.

■ 14. Revise § 87.60 to read as follows:

§ 87.60 Testing engines.

(a) Use the equipment and procedures specified in Appendix 3, Appendix 5, and Appendix 6 of ICAO Annex 16 (incorporated by reference in § 87.8), as applicable, to demonstrate whether engines meet the gaseous emission standards specified in subpart C of this part. Measure the emissions of all regulated gaseous pollutants. Similarly, use the equipment and procedures specified in Appendix 2 and Appendix 6 of ICAO Annex 16 to determine whether engines meet the smoke standard specified in subpart C of this part. The compliance demonstration consists of establishing a mean value from testing some number of engines, then calculating a ''characteristic level'' by applying a set of statistical factors that take into account the number of engines tested. Round each characteristic level to the same number of decimal places as the corresponding emission standard. For turboprop engines, use the procedures specified for turbofan engines, consistent with good engineering judgment.

(b) Use a test fuel meeting the specifications described in Appendix 4 of ICAO Annex 16 (incorporated by reference in § 87.8). The test fuel must not have additives whose purpose is to suppress smoke, such as organometallic compounds.

(c) Prepare test engines by including accessories that are available with production engines if they can reasonably be expected to influence emissions. The test engine may not extract shaft power or bleed service air to provide power to auxiliary gearbox-mounted components required to drive aircraft systems.

(d) Test engines must reach a steady operating temperature before the start of emission measurements.

(e) In consultation with the EPA, the FAA may approve alternate procedures for measuring emissions as specified in this paragraph (e). This might include testing and sampling methods, analytical techniques, and equipment specifications that differ from those specified in this part. Manufacturers and operators may request this approval by sending a written request with supporting justification to the FAA and to the Designated EPA Program Officer. Such a request may be approved only if one of the following conditions is met:

(1) The engine cannot be tested using the specified procedures.

(2) The alternate procedure is shown to be equivalent to or better (e.g., more accurate or precise) than the specified procedure.

(f) The following landing and take-off (LTO) cycles apply for emission testing and calculating weighted LTO values:

TABLE 1 TO § 87.60—LTO TEST CYCLES

Mode	Turboprop		Subsonic turbofan		Supersonic turbofan	
	Percent of rated output	Time in mode (minutes)	Percent of rated output	Time in mode (minutes)	Percent of rated output	Time in mode (minutes)
Take-off	100	0.5	100	0.7	100	1.2
Climb	90	2.5	85	2.2	65	2.0
Descent	.....	.....	.....	.....	15	1.2
Approach	30	4.5	30	4.0	34	2.3
Taxi/ground idle	7	26.0	7	26.0	5.8	26.0

(g) Engines comply with an applicable standard if the testing results show that the engine type certificate family's characteristic level does not exceed the numerical level of that standard, as described in § 87.60.

§§ 87.61–87.63 [Removed]

■ 15. Remove §§ 87.61–87.63.

§ 87.64 [Amended]

■ 16. In § 87.64, remove and reserve paragraph (a).

§§ 87.65–87.71 [Removed]

■ 17. Remove §§ 87.65–87.71.

Subpart H—[Removed]

■ 18. Remove subpart H.

PART 1068—GENERAL COMPLIANCE PROVISIONS FOR HIGHWAY, STATIONARY, AND NONROAD PROGRAMS

■ 19. The authority citation for part 1068 continues to read as follows:

Authority: 42 U.S.C. 7401–7671q.

Subpart A—[Amended]

■ 20. Amend § 1068.1 by revising paragraph (b) to read as follows:

§ 1068.1 Does this part apply to me?

* * * * *

(b) This part does not apply to any of the following engine or vehicle categories:

(1) Light-duty motor vehicles (see 40 CFR part 86).

(2) Heavy-duty motor vehicles and motor vehicle engines, except as specified in 40 CFR part 86.

(3) Aircraft engines, except as specified in 40 CFR part 87.

(4) Land-based nonroad compression-ignition engines we regulate under 40 CFR part 89.

(5) Small nonroad spark-ignition engines we regulate under 40 CFR part 90.

(6) Marine spark-ignition engines we regulate under 40 CFR part 91.

(7) Locomotive engines we regulate under 40 CFR part 92.

(8) Marine compression-ignition engines we regulate under 40 CFR parts 89 or 94.

* * * * *

[FR Doc. 2012–13828 Filed 6–15–12; 8:45 am]

BILLING CODE 6560–50–P

Reader Aids

Federal Register

Vol. 77, No. 117

Monday, June 18, 2012

CUSTOMER SERVICE AND INFORMATION

Federal Register/Code of Federal Regulations	
General Information, indexes and other finding aids	**202–741–6000**
Laws	**741–6000**
Presidential Documents	
Executive orders and proclamations	**741–6000**
The United States Government Manual	**741–6000**
Other Services	
Electronic and on-line services (voice)	**741–6020**
Privacy Act Compilation	**741–6064**
Public Laws Update Service (numbers, dates, etc.)	**741–6043**
TTY for the deaf-and-hard-of-hearing	**741–6086**

ELECTRONIC RESEARCH

World Wide Web

Full text of the daily Federal Register, CFR and other publications is located at: **www.fdsys.gov.**

Federal Register information and research tools, including Public Inspection List, indexes, and links to GPO Access are located at: **www.ofr.gov.**

E-mail

FEDREGTOC-L (Federal Register Table of Contents LISTSERV) is an open e-mail service that provides subscribers with a digital form of the Federal Register Table of Contents. The digital form of the Federal Register Table of Contents includes HTML and PDF links to the full text of each document.

To join or leave, go to **http://listserv.access.gpo.gov** and select *Online mailing list archives, FEDREGTOC-L, Join or leave the list (or change settings);* then follow the instructions.

PENS (Public Law Electronic Notification Service) is an e-mail service that notifies subscribers of recently enacted laws.

To subscribe, go to **http://listserv.gsa.gov/archives/publaws-l.html** and select *Join or leave the list (or change settings);* then follow the instructions.

FEDREGTOC-L and **PENS** are mailing lists only. We cannot respond to specific inquiries.

Reference questions. Send questions and comments about the Federal Register system to: **fedreg.info@nara.gov**

The Federal Register staff cannot interpret specific documents or regulations.

Reminders. Effective January 1, 2009, the Reminders, including Rules Going Into Effect and Comments Due Next Week, no longer appear in the Reader Aids section of the Federal Register. This information can be found online at **http://www.regulations.gov.**

CFR Checklist. Effective January 1, 2009, the CFR Checklist no longer appears in the Federal Register. This information can be found online at **http://bookstore.gpo.gov/.**

FEDERAL REGISTER PAGES AND DATE, JUNE

32391–32880 1
32881–33062 4
33063–33288 5
33289–33594 6
33595–33944 7
33945–34178 8
34179–34780 11
34781–35240 12
35241–35616 13
35617–35806 14
35807–36114 15
36115–36386 18

CFR PARTS AFFECTED DURING JUNE

At the end of each month the Office of the Federal Register publishes separately a List of CFR Sections Affected (LSA), which lists parts and sections affected by documents published since the revision date of each title.

3 CFR

Proclamations:
8829 32875
8830 32877
8831 32879
8832 33595
8833 33597
8834 33599
8835 33601
8836 33603
8837 35807

Administrative Orders:
Memorandums:
Memorandum of April 24, 2012 33945
Memorandum of May 23, 2012 32391
Memorandum of June 7, 2012 35241

Notices:
Notice of June 14, 2012 36113
Presidential Determinations:
No. 2012–07 of April 24, 2012 33947

5 CFR

Ch. LXXXIII 34179
9301 34179

Proposed Rules:
532 34854
1200 33663
1201 33663
1203 33663
1208 33663
1209 33663

6 CFR

5 33605

Proposed Rules:
5 33683

7 CFR

7 33063
28 33289
205 33290
319 34781
614 34186
930 ..... 33303, 36115
983 36119
985 33076
1700 35245

Proposed Rules:
932 33104
1205 34855
1280 34868
3201 33270

9 CFR

11 33607
55 35542
81 35542
93 34783
94 34783
95 34783

10 CFR

26 33619
71 34194
73 34194
170 35809
171 35809

Proposed Rules:
430 ..... 33106, 35299
431 32916
1703 ..... 32433, 33980

12 CFR

1 ..... 35253, 35259
5 35253
16 35253
28 35253
160 ..... 35253, 35259
225 33949
241 32881
1236 33950

Proposed Rules:
380 36194
1026 33120
1254 36086
1282 34263

14 CFR

25 36123
39 ..... 32884, 32887, 32889, 32892, 33083, 33619, 33622, 34206, 36125, 36127, 36129, 36131, 36134, 36137, 36139, 36143, 36146
71 ..... 32393, 32895, 32896, 34208, 34209, 34210, 34211, 35617, 35618, 35836
97 ..... 33085, 33087
121 34784

Proposed Rules:
39 ..... 32433, 32437, 32439, 32918, 33125, 33127, 33129, 33332, 33334, 34281, 34283, 34870, 34872, 34874, 34876, 34878, 34881, 35304, 35306, 35888, 35890, 36206, 36209, 36211, 36213, 36216, 36220, 36222, 36224
71 ..... 32921, 33685, 33687
73 35308
121 32441

15 CFR

Proposed Rules:
740 33688
742 ..... 33688, 35310
774 ..... 33688, 35310
906 33980
1400 34883

16 CFR

436 36149

Proposed Rules:

305 33337

17 CFR

46 35200
275 35263

Proposed Rules:

3 35892
23 35892
240 35625

19 CFR

12 33624
111 33964
163 33964

20 CFR

404 35264

21 CFR

179 34212
510 32897
516 35837

Proposed Rules:

172 35317

22 CFR

120 33089
123 33089
124 33089
126 33089
127 33089
129 33089

Proposed Rules:

121 ....33698, 35317

25 CFR

Proposed Rules:

226 36226
543 32444
547 32465

26 CFR

1 ....34785, 34788
20 36150
25 36150
602 36150

Proposed Rules:

1 ....34884, 34887, 36228, 36229
20 36229
25 36229

27 CFR

478 ....33625, 33630

Proposed Rules:

9 33985

29 CFR

4022 35838
4044 35838

Proposed Rules:

1206 33701

30 CFR

Proposed Rules:

917 34888
936 34890
944 34892
950 34894

31 CFR

344 33634
1010 33635
1020 33638

33 CFR

100 ....33089, 33337, 33967, 34215, 35266, 35839
117 ....32393, 32394, 33337, 34797, 35843
151 ....33969, 35268
165 ....32394, 32898, 33089, 33094, 33308, 33309, 33312, 33970, 34797, 34798, 35268, 35271, 35619, 35621, 35839, 35844, 35846, 35848, 35850, 35852, 35854, 35855, 35857, 35860, 35862

Proposed Rules:

100 ....33130, 35321
117 35897
165 ....34285, 34894, 35898, 35900, 35903, 35906

36 CFR

242 35482

Proposed Rules:

220 35323
1191 36231

37 CFR

Proposed Rules:

201 35643

38 CFR

3 34218
9 32397

39 CFR

20 33640
111 33314

40 CFR

51 33642
52 ....32398, 33642, 33659, 34218, 34801, 34808, 34810, 34819, 35273, 35279, 35285, 35287, 35862, 35866, 35870, 35873, 36163
81 ....34221, 34819
82 33315
85 34130
86 34130
87 36342
97 34830
180 ....32400, 32401, 35291, 35295
271 34229
711 36170
1039 34130
1068 36342

Proposed Rules:

52 ....32481, 32483, 32493, 33022, 33360, 33363, 33372, 33380, 34288, 34297, 34300, 34302, 34306, 34897, 34898, 34906, 35326, 35327, 35329, 35652, 35909, 35917, 36044
60 33812
63 33812
65 36248
80 34915
85 34149
86 34149
122 ....34315, 34927
123 ....34315, 34927
124 ....34315, 34927
125 ....34315, 34927
725 35331
1039 34149

42 CFR

71 35873
417 32407
422 32407
423 32407

Proposed Rules:

88 35574
405 35917
411 35917
412 34326
413 34326
424 34326
476 34326
489 34326

44 CFR

64 36172

45 CFR

Proposed Rules:

156 33133

46 CFR

25 33860
27 33860
28 33860
31 33860
34 33860
35 33860
62 33860
71 33860
76 33860
78 33860
91 33860
95 33860
97 33860
107 33860
108 33860
112 33860
115 33860
118 33860
119 33860
122 33860
131 33860
132 33860
147 33860
162 ....33860, 33969, 35268
167 33860
169 33860
176 33860
181 33860
182 33860
185 33860
189 33860
190 33860
193 33860
194 33860
196 33860
532 33971

47 CFR

1 ....33097, 36177
11 33661
15 33098
17 36177
22 36177
24 36177
25 36177
27 36177
51 35623
54 ....33097, 35623
64 ....33662, 34233
73 32900
76 36178
80 36177
87 36177
90 ....33972, 36177

Proposed Rules:

11 33995
54 33896
64 35336
73 33997

48 CFR

6 35624
15 35624
19 35624
201 35879
203 35879
204 35879
212 35879
213 35879
216 35883
217 35879
219 35879
222 35879
225 ....35879, 35883
233 35879
243 35879
252 ....35879, 35883

Proposed Rules:

211 35921
212 35921
218 35921
246 35921
252 35921

49 CFR

234 35164
371 32901
375 32901
386 ....32901, 34249
387 32901
390 34846
395 ....33098, 33331
396 34846
541 32903

Proposed Rules:

594 35338
595 33998
1572 35343

50 CFR

17 ....33100, 35118
100 35482
226 32909
622 ....32408, 32913, 32914, 34254
660 36192
665 34260
679 ....33103, 34262, 34853
697 32420

Proposed Rules:

17 ....32483, 32922, 33142, 33143, 34338
20 34931
600 35349
665 ....34331, 34334
679 35925

LIST OF PUBLIC LAWS

This is a continuing list of public bills from the current session of Congress which have become Federal laws. It may be used in conjunction with "P L U S" (Public Laws Update Service) on 202–741–6043. This list is also available online at *http://www.archives.gov/federal-register/laws*.

The text of laws is not published in the **Federal Register** but may be ordered in "slip law" (individual pamphlet) form from the Superintendent of Documents, U.S. Government Printing Office, Washington, DC 20402 (phone, 202–512–1808). The text will also be made available on the Internet from GPO's Federal Digital System (FDsys) at *http://www.gpo.gov/fdsys*. Some laws may not yet be available.

S. 3261/P.L. 112–132
To allow the Chief of the Forest Service to award certain contracts for large air tankers. (June 13, 2012; 126 Stat. 379)
Last List June 13, 2012

Public Laws Electronic Notification Service (PENS)

PENS is a free electronic mail notification service of newly enacted public laws. To subscribe, go to *http://listserv.gsa.gov/archives/publaws-l.html*

Note: This service is strictly for E-mail notification of new laws. The text of laws is not available through this service. **PENS** cannot respond to specific inquiries sent to this address.